Jim Fitzgerald
6/15/94

Measurement of Main Ring Quads for Main Injector BPM dimensions

MI-0111

The design for the Main Injector (MI) specifics that the Beam Position Monitors (BPMs) will be placed inside the quadrapole magnets. The magnets will be reused quads from the Main Ring (MR), with the new MI beam tube placed inside the old beam tube. This of course places many restrictions on the design of the BPMs as space is at a premium. The various aspects such as the physical strength of BPM housings, beam pipe aperture, plate locations, electrical characterics, and the limited physical space available require unusual design compromises to be made.

The quad beam pipe has the (nominal) irregular shape as shown in the drawing below. The ends are "bell mouthed" from stress relief, and internally it is compressed and distorted by the magnet laminations at the 45 degree quadrature locations. The space available inside the quad pipe was determined by measuring several spare, new and old magnets using an inside micrometer along the horizontal and vertical axis. Measurements were taken at locations 1 inch and at 12 inches from both ends of each magnet.

Listed below is data from about 10 magnets, (all that I could find) with diagrams and statistics. This data shows that the <u>average</u> horizontal ID is expanded 105.6% and the <u>average</u> vertical ID is reduced 90.7%, (from the nominal quad beam pipe dimensions). However, to insure that the BPMs will fit into all magnets, we must take into account the tightest beam pipes likely to occur. Statistically, 1σ, 2σ and 3σ (σ= standard deviation) from the mean would indicate the sizes that would include 84.1, 97.7 and 99.8% respectively, of a normal distribution (one side of the curve).

At the horizontal locations, the beam pipe is actually tighter at the ends with a mean of 4.9446 and a std. dev. of .0347. Therefore a 3σ deviation would indicate an ID of 4.8406. The Main Injector beam pipe, horizontal outside dimension is appropriately specified at 4.839. The vertical dimension is tighter internally at the 12" location, where the mean is 3.0835 with a std. dev. of .0690. Likewise a 3σ deviation indicates a vertical dimension of 2.876. This is over 1/2 inch less than the nominal quad beam pipe size! Superimposed on the Quad beam pipe drawing is a another view, scaled 84.6% vertically and 105.6% horizontally representing the 3σ dev. These numbers indicate the maximum outside dimensions of the Main Injector BPMS. They include no safety factor, and at these dimensions it is still possible that a small number would be tight and require "adjusting" or "persuasion" in order to fit inside the magnets.

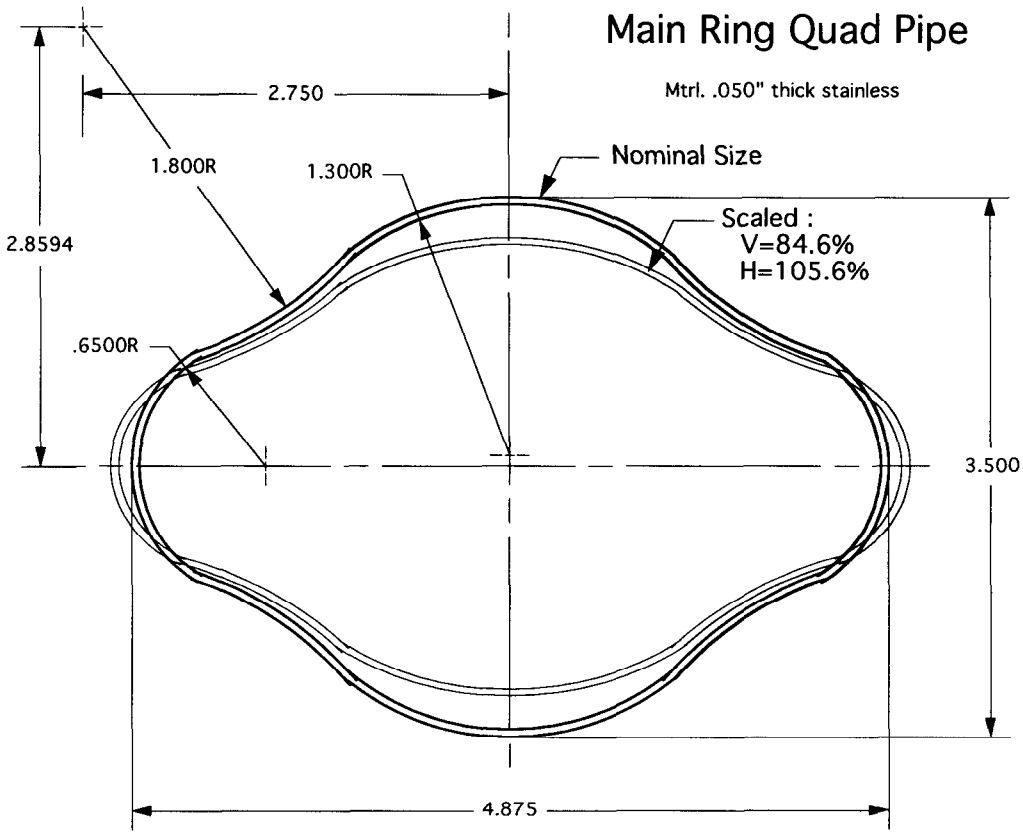

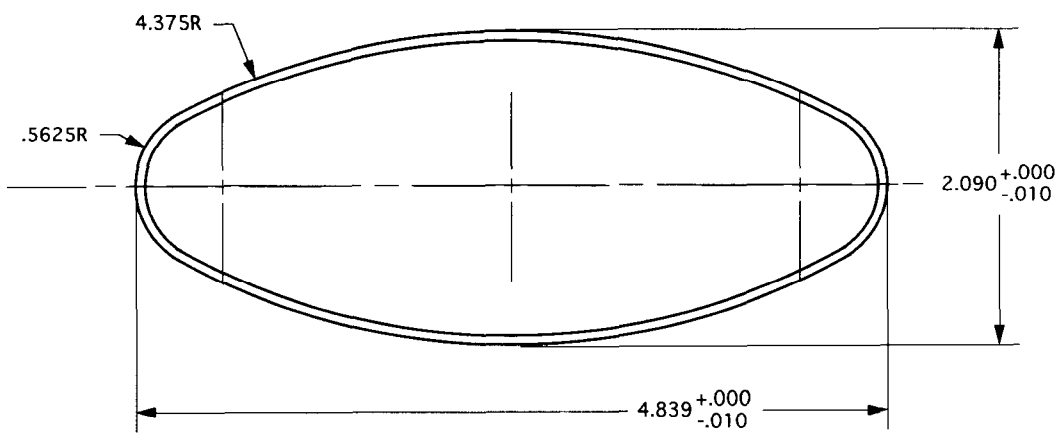

Main Injector beam pipe

Mtrl. 16 gauge stainless (.0595" thick)

Magnet No.	Horizontal AH&BH 1"		Stats.	Horizontal AH&BH 12"		Stats.
IQC001 (A end)	4.850	Mean	4.9446	4.952	Mean	5.0425
IQD001	4.916	Stand. Error	0.0080	4.960	Stand. Error	0.0123
7234	4.970	Median	4.9500	5.030	Median	5.0350
4019	4.935	Mode	4.9500	5.032	Mode	5.0300
IQB002-1	4.927	Stand. Dev.	0.0347	5.080	Stand. Dev.	0.0536
4049	4.965	Variance	0.0012	5.040	Variance	0.0029
4017	4.950	Kurtosis	-0.0081	5.035	Kurtosis	0.0287
4053	4.980	Skewness	-0.1986	5.075	Skewness	-0.7540
7257	5.015	Range	0.1350	5.110	Range	0.1750
IQC0030/7342	4.915	Minimum	4.8800	5.035	Minimum	4.9350
IQC001 (B end)	4.880	Maximum	5.0150	4.935	Maximum	5.1100
IQD001	4.880	Sum	93.9480	4.935	Sum	95.8070
7234	4.960	Count	19	5.105	Count	19
4019	4.955			5.105		
IQB002-1	4.925	Size 1 std. D.	4.9099	5.090	Size 1 std. D.	4.9888
4049	4.955	Size 2 std. D.	4.8752	5.030	Size 2 std. D.	4.9352
4017	4.950	Size 3 std. D.	4.8406	5.025	Size 3 std. D.	4.8816
4053	4.980			5.060		
7257	4.915			5.100		
IQC0030/7342	4.975			5.025		

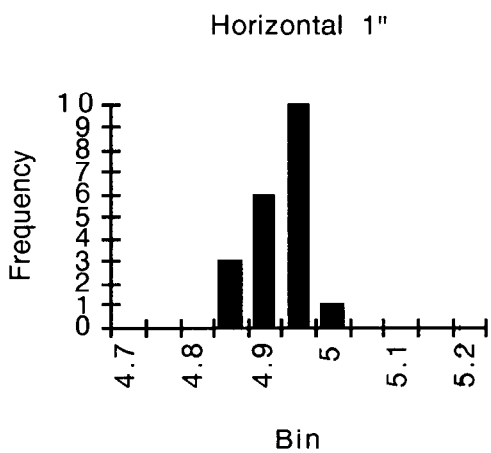

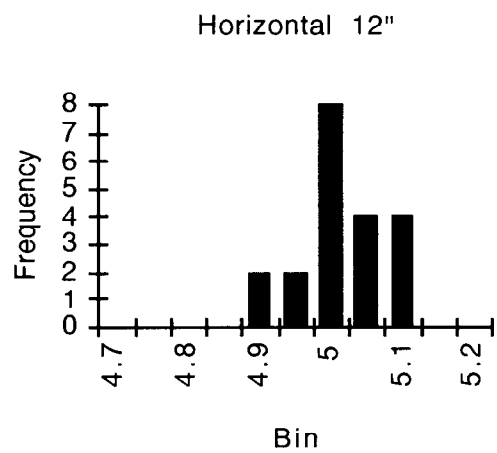

Magnet No.	Vertical AV&BV 1"		Stats.	Vertical AV&BV 12"		Stats.
IQC001 (A end)	3.280	Mean	3.1666	3.210	Mean	3.0835
IQD001	3.185	Stand. Error	0.0114	3.193	Stand. Error	0.0158
7234	3.175	Median	3.1750	3.193	Median	3.0820
4019	3.175	Mode	3.1750	3.080	Mode	3.0900
IQB002-1	3.160	Stand. Dev.	0.0497	3.000	Stand. Dev.	0.0690
4049	3.177	Variance	0.0025	3.085	Variance	0.0048
4017	3.175	Kurtosis	-0.2003	3.090	Kurtosis	-0.6278
4053	3.125	Skewness	-0.6409	3.022	Skewness	0.6625
7257	3.125	Range	0.1600	3.022	Range	0.2100
IQC0030/7342	3.190	Minimum	3.0750	3.101	Minimum	2.9950
IQC001 (B end)	3.234	Maximum	3.2350	3.205	Maximum	3.2050
IQD001	3.235	Sum	60.1650	3.198	Sum	58.5860
7234	3.235	Count	19	3.040	Count	19
4019	3.177			3.082		
IQB002-1	3.082	Size 1 std. D.	3.1169	2.995	Size 1 std. D.	3.0145
4049	3.190	Size 2 std. D.	3.0673	3.090	Size 2 std. D.	2.9454
4017	3.200	Size 3 std. D.	3.0176	3.090	Size 3 std. D.	2.8764
4053	3.175			3.065		
7257	3.075			3.010		
IQC0030/7342	3.075			3.025		

Vertical 1"

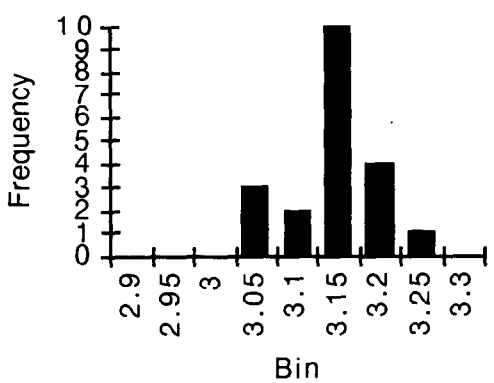

Vertical 12"