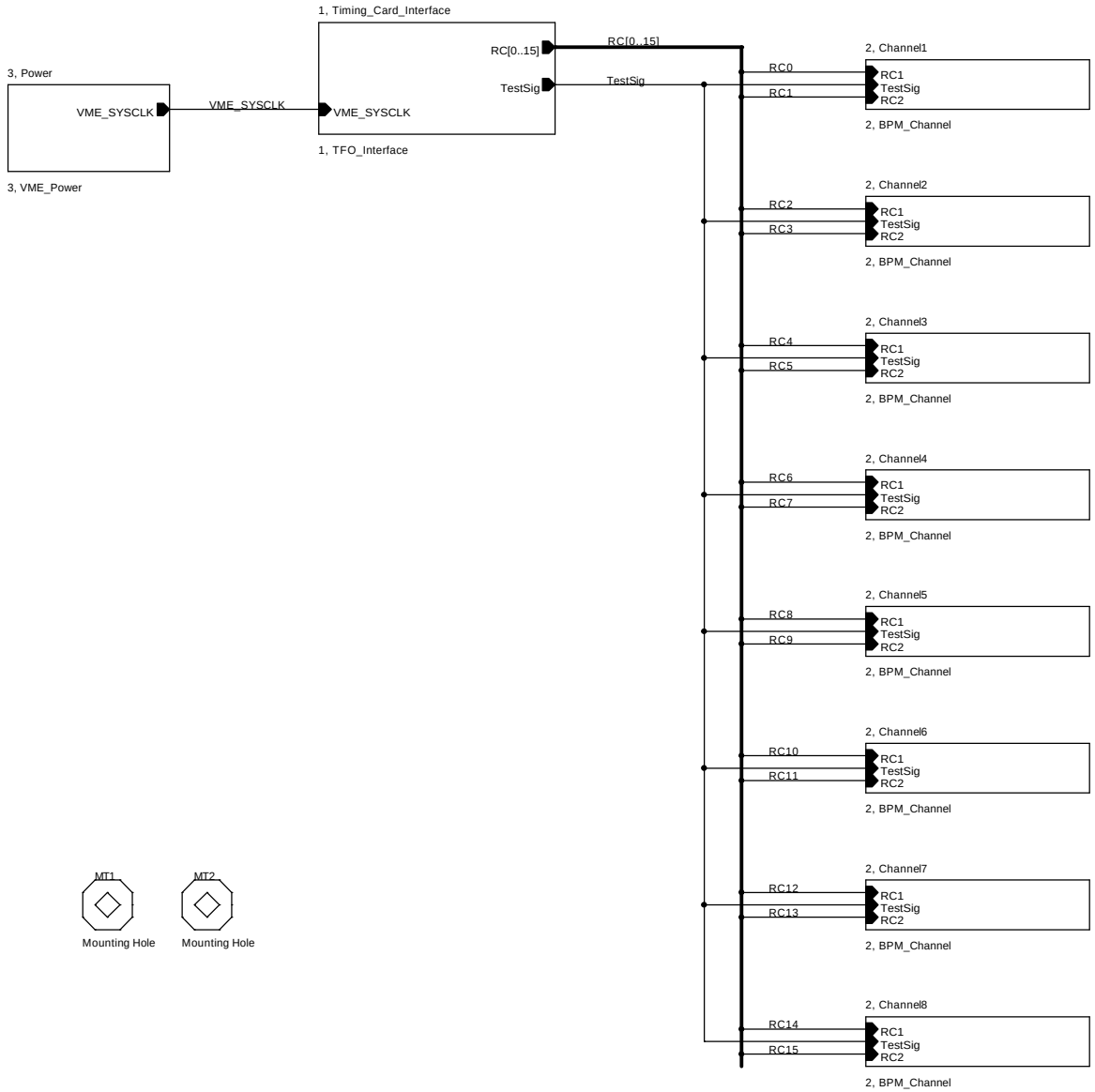

Title	BPM FILTER Card	
Size B	Document Number <Doc>	Rev 0
Date: 06/02/04 10:44:23	Sheet 1 of 11	

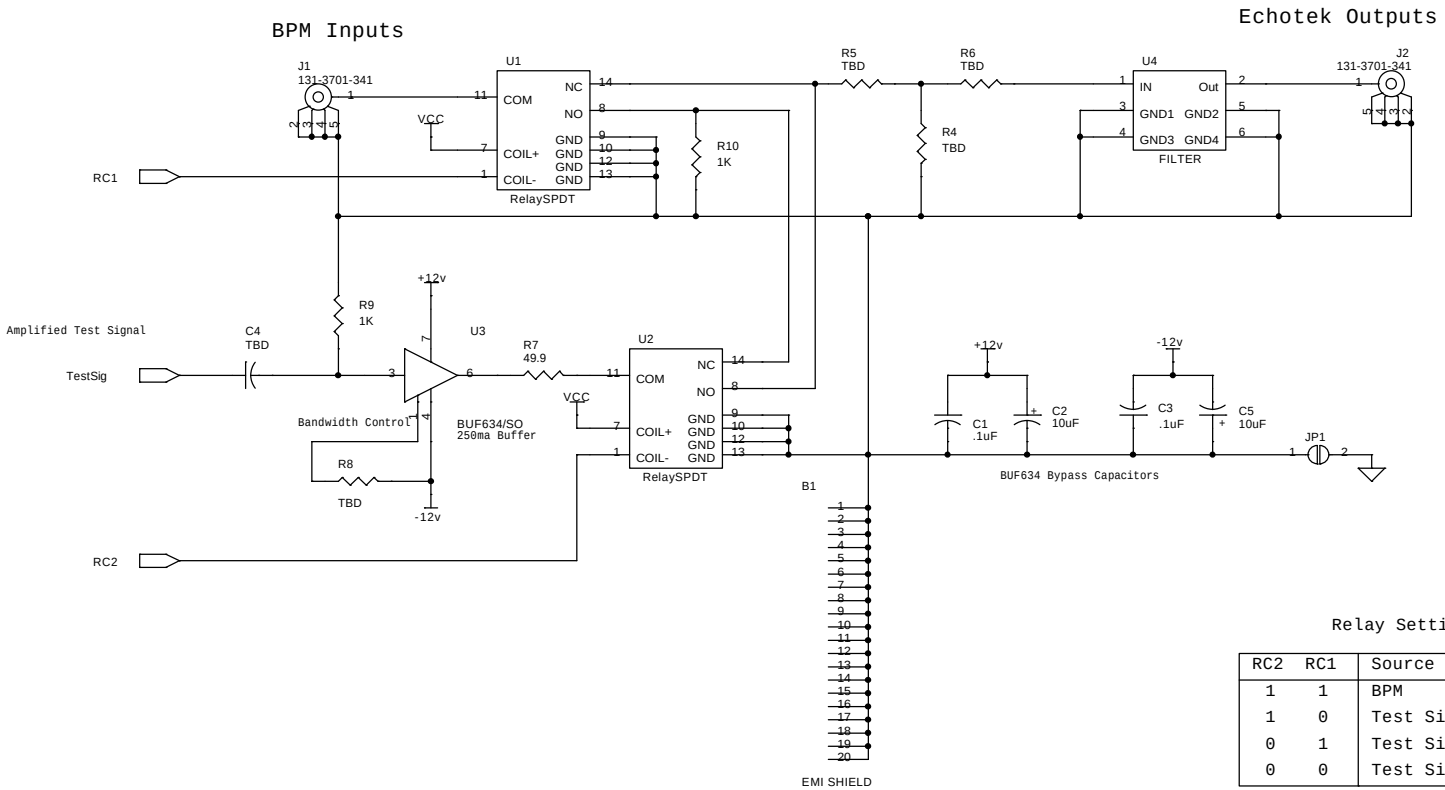

Relay Settings Table

RC2	RC1	Source	Destination
1	1	BPM	Echotek
1	0	Test Signal	BPM
0	1	Test Signal	BPM & Echotek
0	0	Test Signal	Echotek

Notes: Relay is energized when RCx=0
Defualt state is RC1=1, RC2=1
Timming Fanout Card sends a 1 to
the relay driver to energize a relay.

Title	BPM FILTER CARD - BPM Channel	
Size B	Document Number <Doc>	Rev 0
Date: 06/21/04 12:46:38	Sheet 2 of 11	

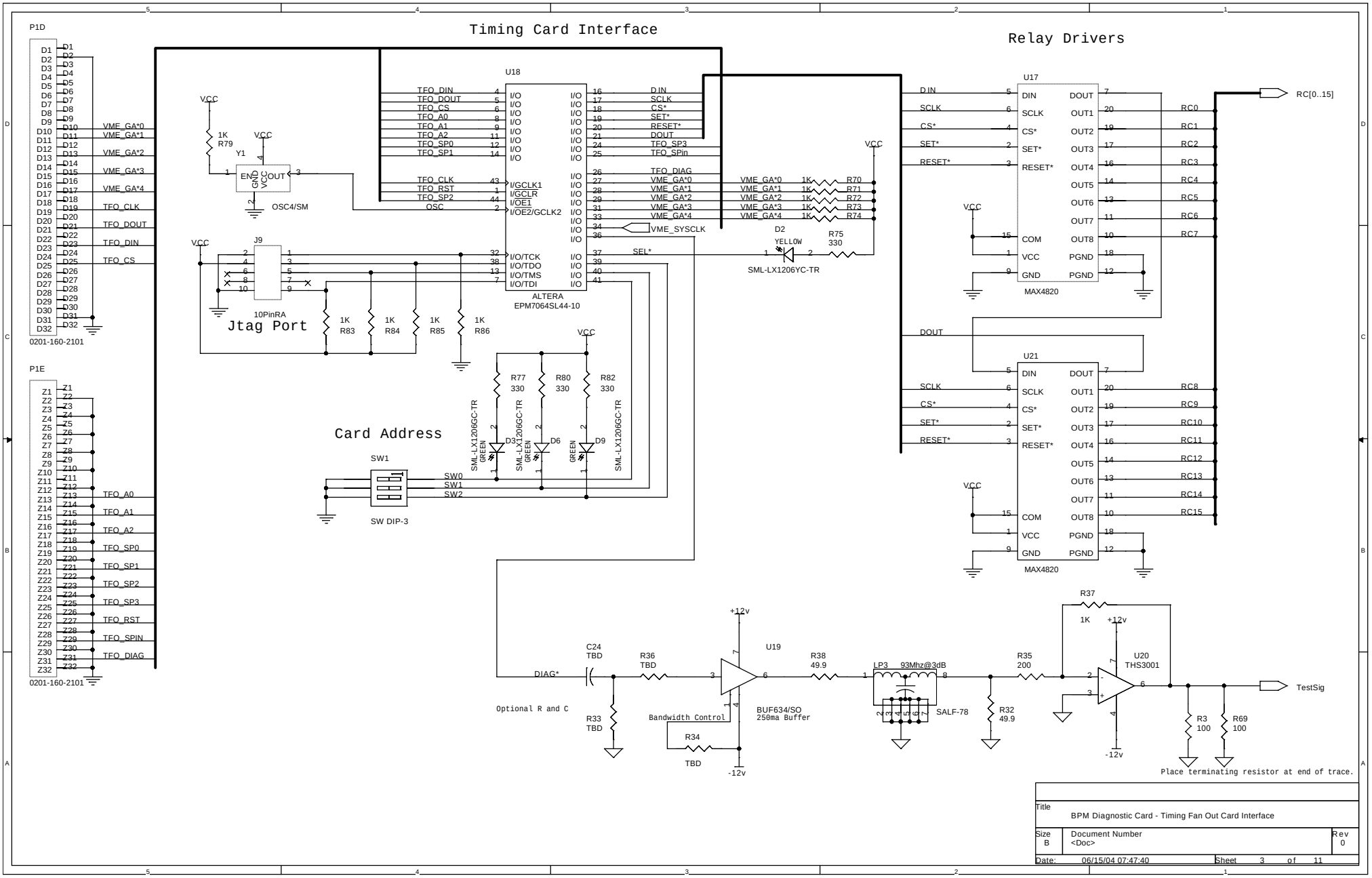
Timing Card Interface
Relay Drivers
Jtag Port
Card Address
P1D
0201-160-2101
P1E
0201-160-2101
U18
ALTERA
EPM7064SL44-10
U17
MAX4820
U21
MAX4820
U19
BUF634/SO
250ma Buffer
U20
THS3001
J9
10PinRA
SW1
SW DIP-3
Y1
OSC4/SM
D2
YELLOW
SML-LX1206YC-TR
LP3 93Mhz@3dB
SALF-78
Bandwidth Control
Optional R and C
Place terminating resistor at end of trace.
RC[0..15]
TestSig
VME_SYSCLK
Title
BPM Diagnostic Card - Timing Fan Out Card Interface
Size
B
Document Number
<Doc>
Rev
0
Date: 06/15/04 07:47:40
Sheet 3 of 11

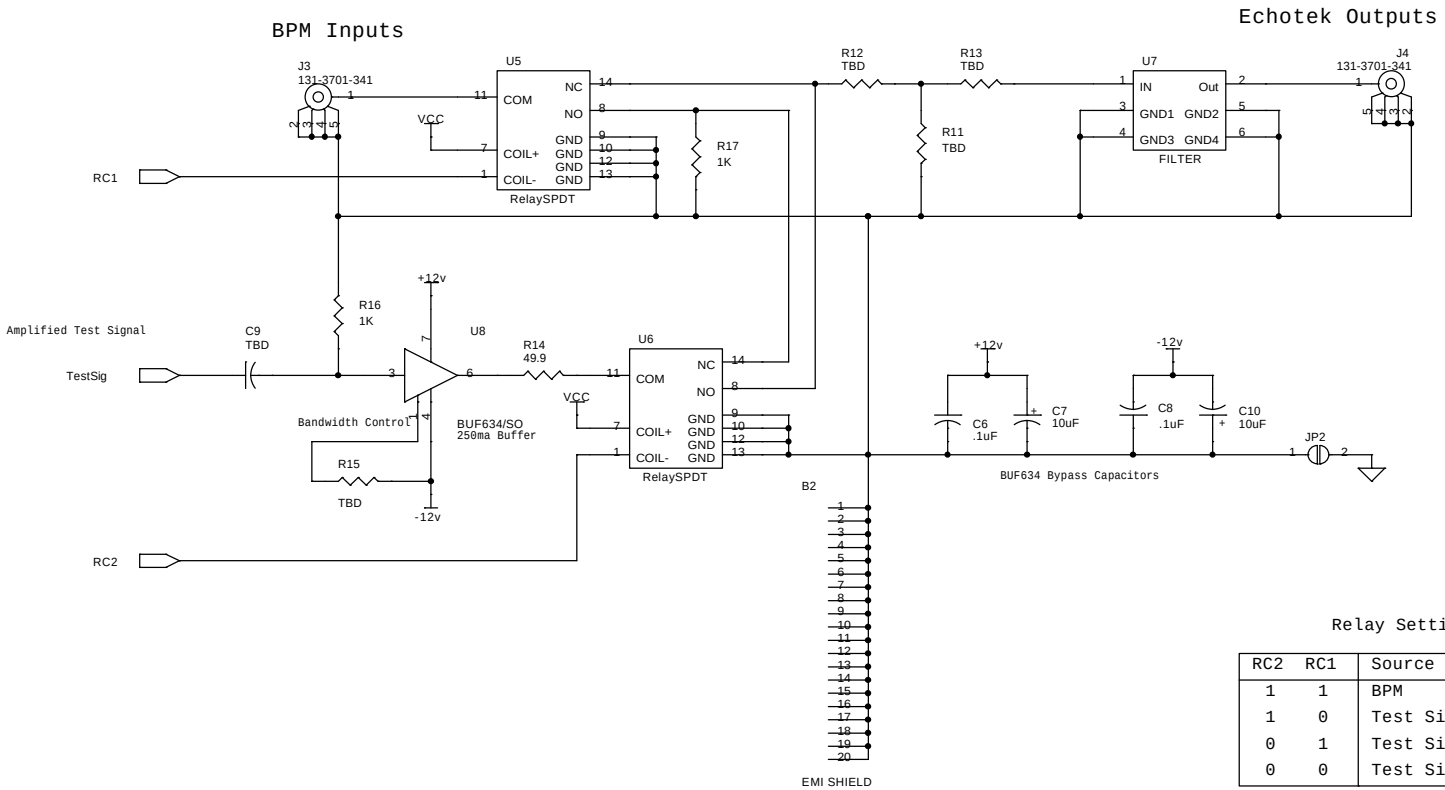

Relay Settings Table

RC2	RC1	Source	Destination
1	1	BPM	Echotek
1	0	Test Signal	BPM
0	1	Test Signal	BPM & Echotek
0	0	Test Signal	Echotek

Notes: Relay is energized when RCx=0
Defualt state is RC1=1, RC2=1
Timming Fanout Card sends a 1 to
the relay driver to energize a relay.

Title	BPM FILTER CARD - BPM Channel	
Size B	Document Number <Doc>	Rev 0
Date: 06/21/04 12:46:38	Sheet 4 of 11	

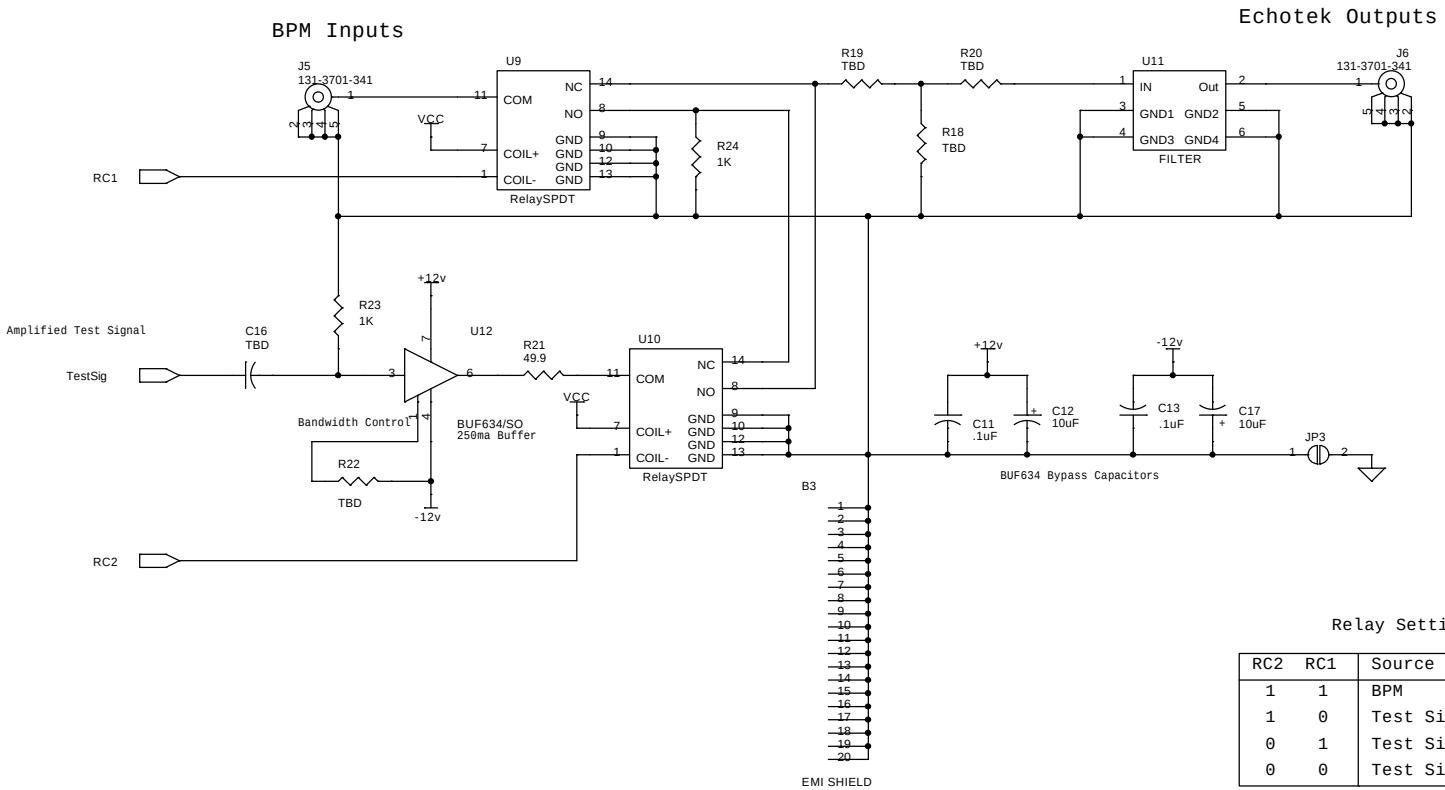

Relay Settings Table

RC2	RC1	Source	Destination
1	1	BPM	Echotek
1	0	Test Signal	BPM
0	1	Test Signal	BPM & Echotek
0	0	Test Signal	Echotek

Notes: Relay is energized when RCx=0
Defualt state is RC1=1, RC2=1
Timming Fanout Card sends a 1 to
the relay driver to energize a relay.

Title	BPM FILTER CARD - BPM Channel	
Size B	Document Number <Doc>	Rev 0
Date: 06/21/04 12:46:38	Sheet 5 of 11	

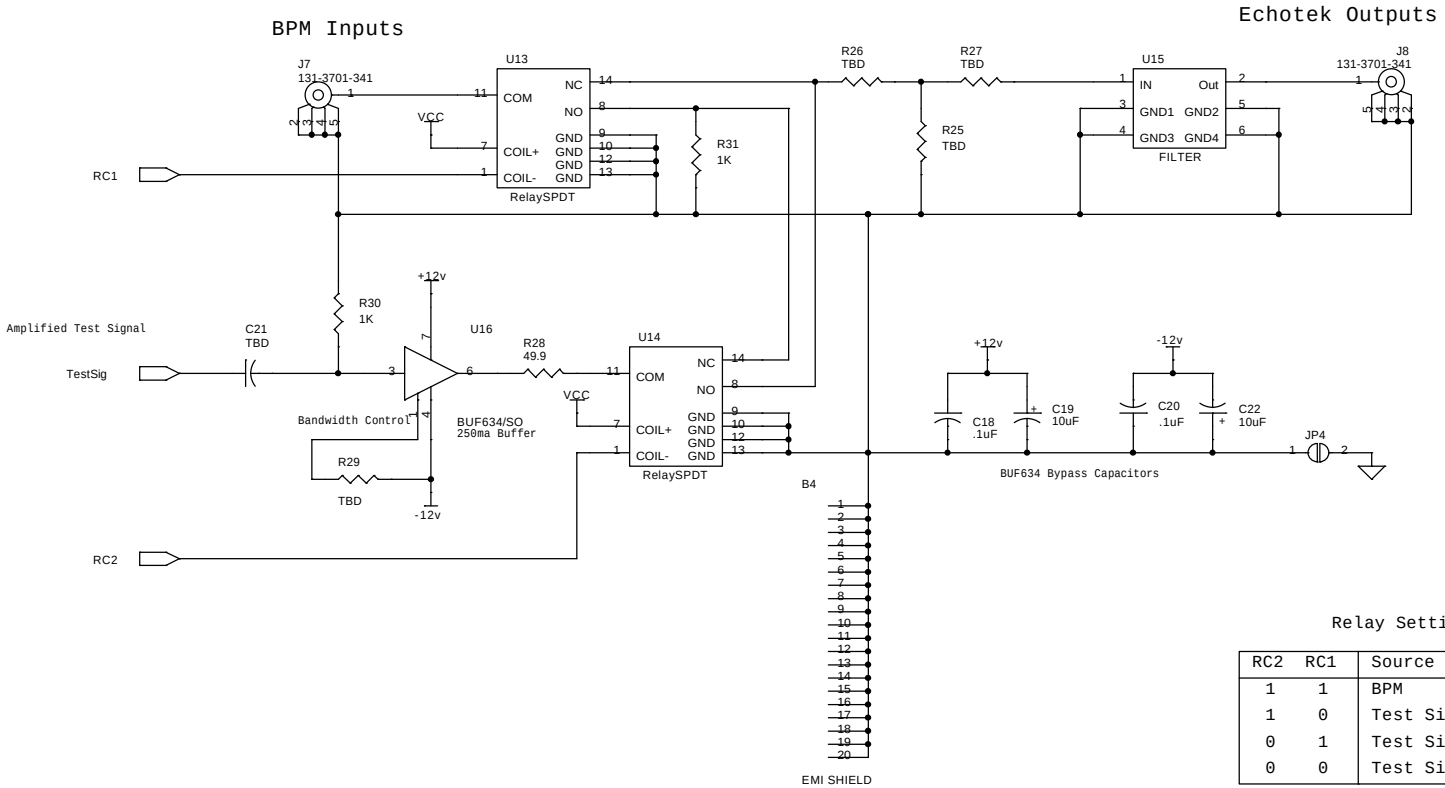

Relay Settings Table

RC2	RC1	Source	Destination
1	1	BPM	Echotek
1	0	Test Signal	BPM
0	1	Test Signal	BPM & Echotek
0	0	Test Signal	Echotek

Notes: Relay is energized when RCx=0
Defualt state is RC1=1, RC2=1
Timming Fanout Card sends a 1 to
the relay driver to energize a relay.

Title	BPM FILTER CARD - BPM Channel	
Size B	Document Number <Doc>	Rev 0
Date: 06/21/04 12:46:38	Sheet 6 of 11	

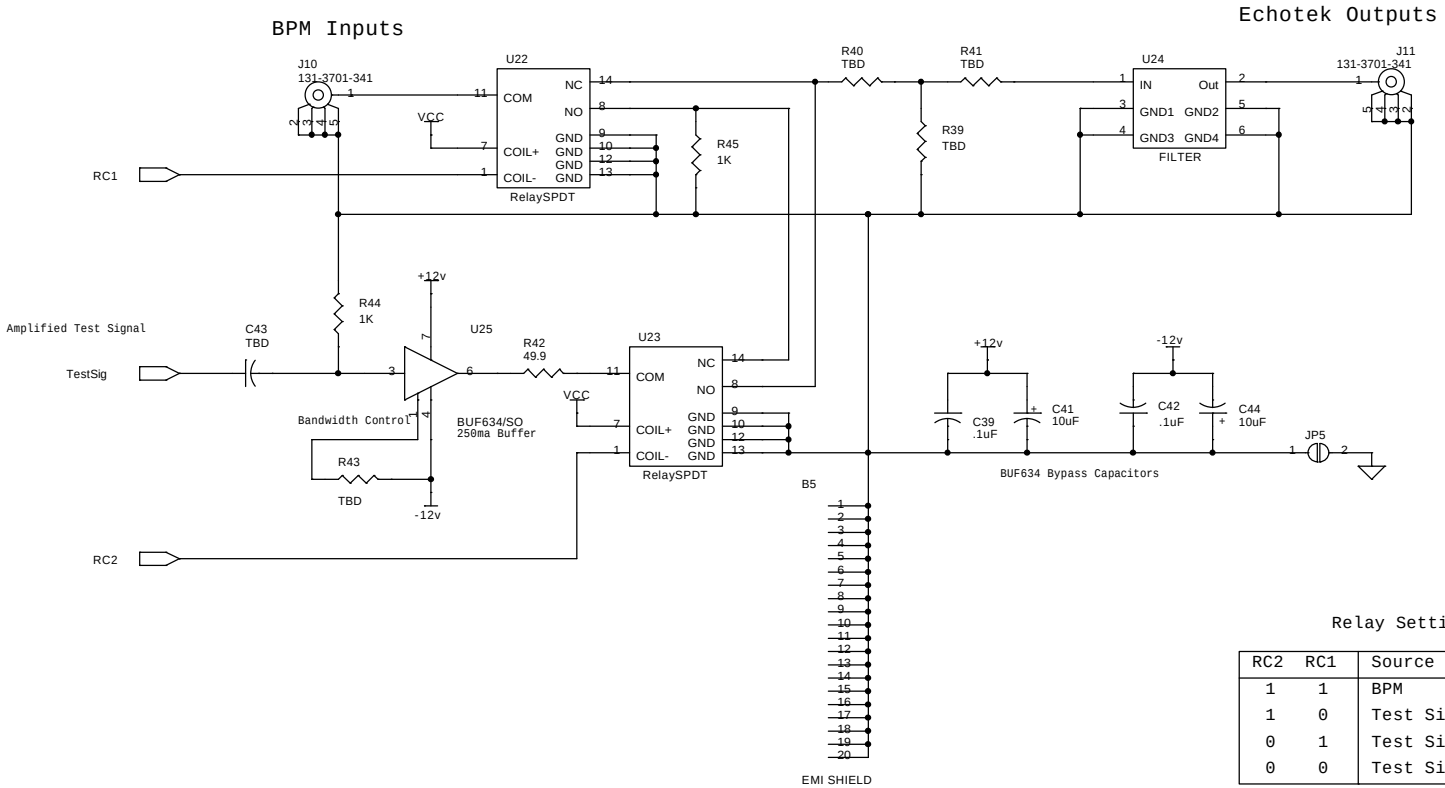

Relay Settings Table

RC2	RC1	Source	Destination
1	1	BPM	Echotek
1	0	Test Signal	BPM
0	1	Test Signal	BPM & Echotek
0	0	Test Signal	Echotek

Notes: Relay is energized when RCx=0
Defualt state is RC1=1, RC2=1
Timming Fanout Card sends a 1 to
the relay driver to energize a relay.

Title	BPM FILTER CARD - BPM Channel	
Size B	Document Number <Doc>	Rev 0
Date: 06/21/04 12:46:38	Sheet 7 of 11	

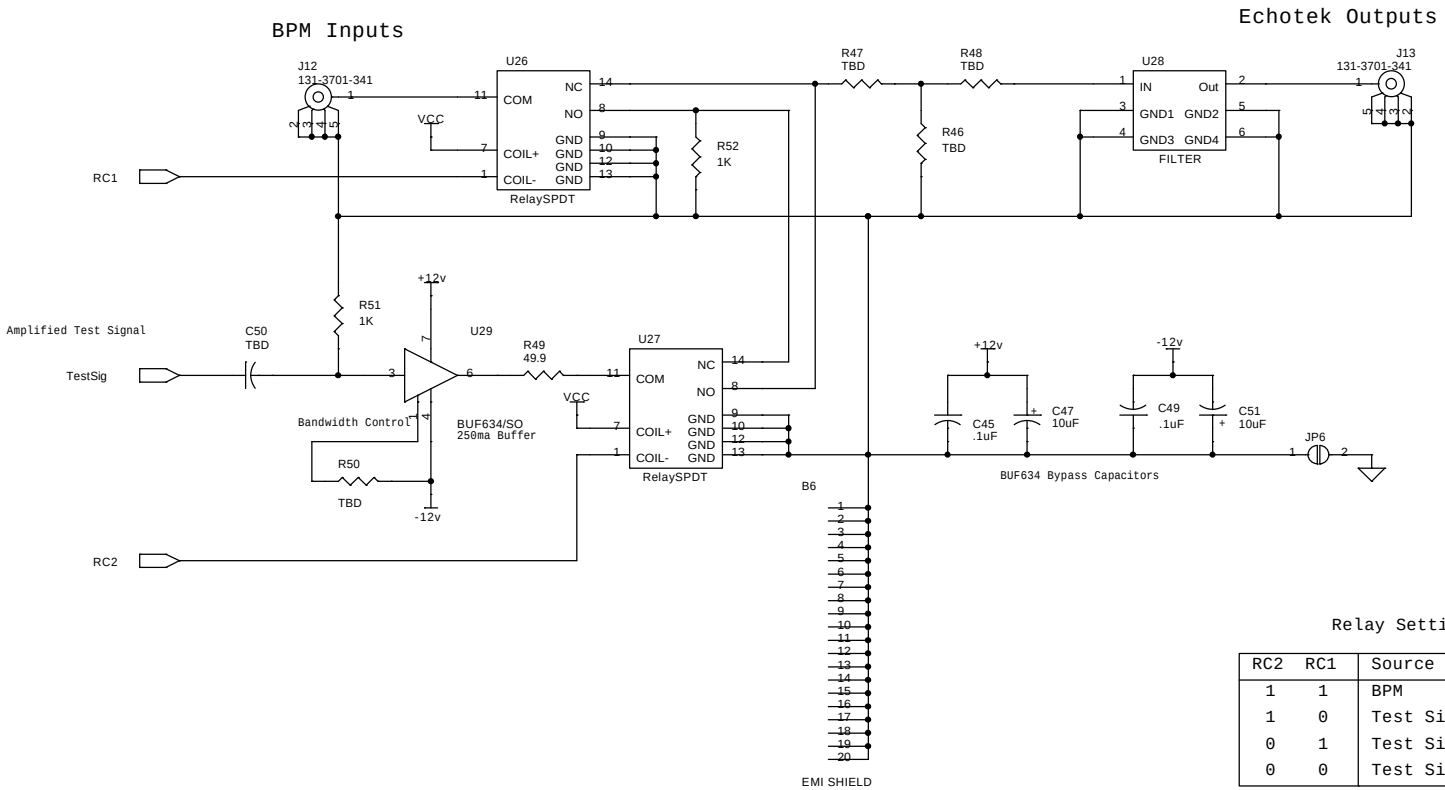

Relay Settings Table

RC2	RC1	Source	Destination
1	1	BPM	Echotek
1	0	Test Signal	BPM
0	1	Test Signal	BPM & Echotek
0	0	Test Signal	Echotek

Notes: Relay is energized when RCx=0
Defualt state is RC1=1, RC2=1
Timming Fanout Card sends a 1 to
the relay driver to energize a relay.

Title	BPM FILTER CARD - BPM Channel	
Size B	Document Number <Doc>	Rev 0
Date: 06/21/04 12:46:38	Sheet 8 of 11	

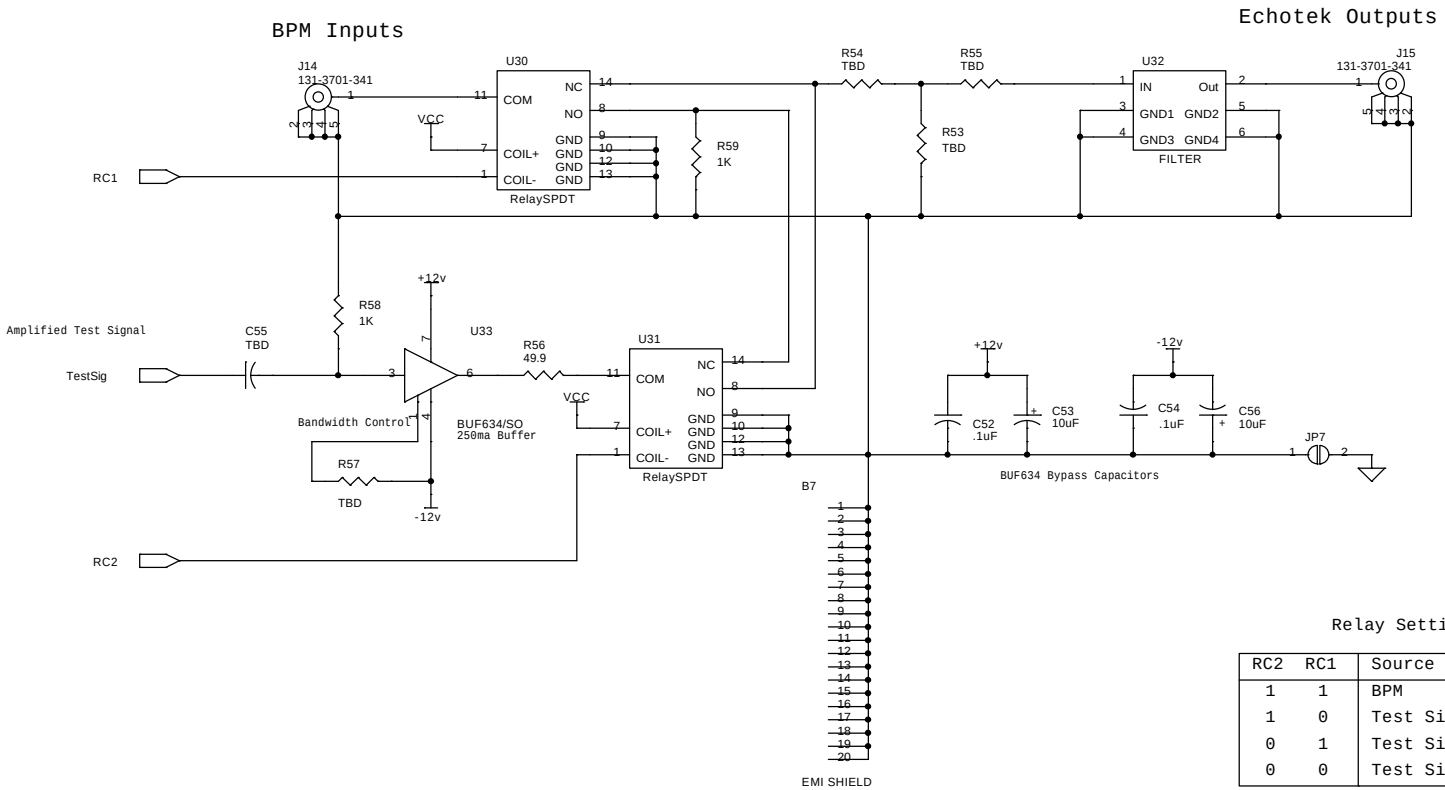

Relay Settings Table

RC2	RC1	Source	Destination
1	1	BPM	Echotek
1	0	Test Signal	BPM
0	1	Test Signal	BPM & Echotek
0	0	Test Signal	Echotek

Notes: Relay is energized when RCx=0
Defualt state is RC1=1, RC2=1
Timming Fanout Card sends a 1 to
the relay driver to energize a relay.

Title	BPM FILTER CARD - BPM Channel	
Size B	Document Number <Doc>	Rev 0
Date: 06/21/04 12:46:38	Sheet 9 of 11	

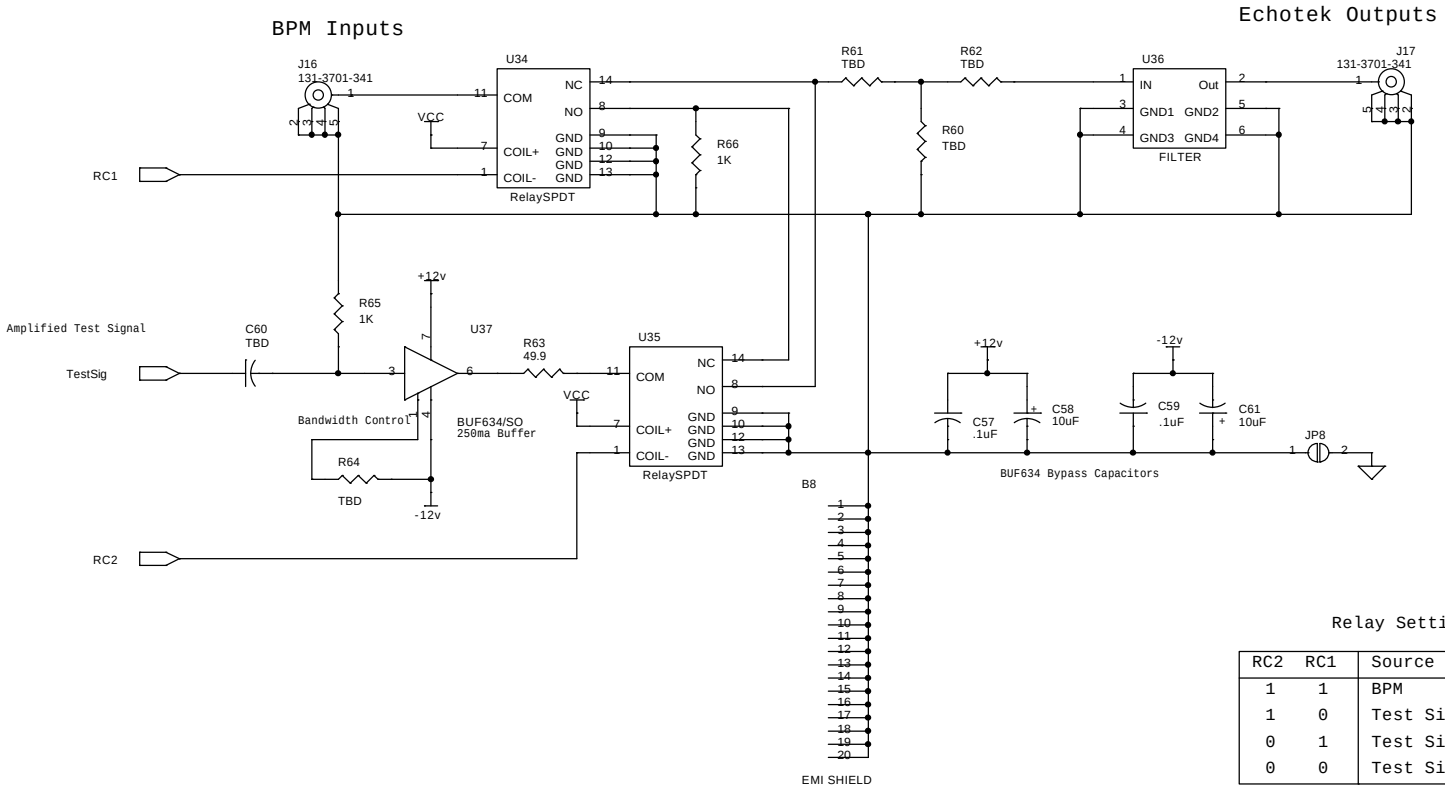

Relay Settings Table

RC2	RC1	Source	Destination
1	1	BPM	Echotek
1	0	Test Signal	BPM
0	1	Test Signal	BPM & Echotek
0	0	Test Signal	Echotek

Notes: Relay is energized when RCx=0
Defualt state is RC1=1, RC2=1
Timming Fanout Card sends a 1 to
the relay driver to energize a relay.

Title	BPM FILTER CARD - BPM Channel	
Size B	Document Number <Doc>	Rev 0
Date: 06/21/04 12:46:38	Sheet 10 of 11	

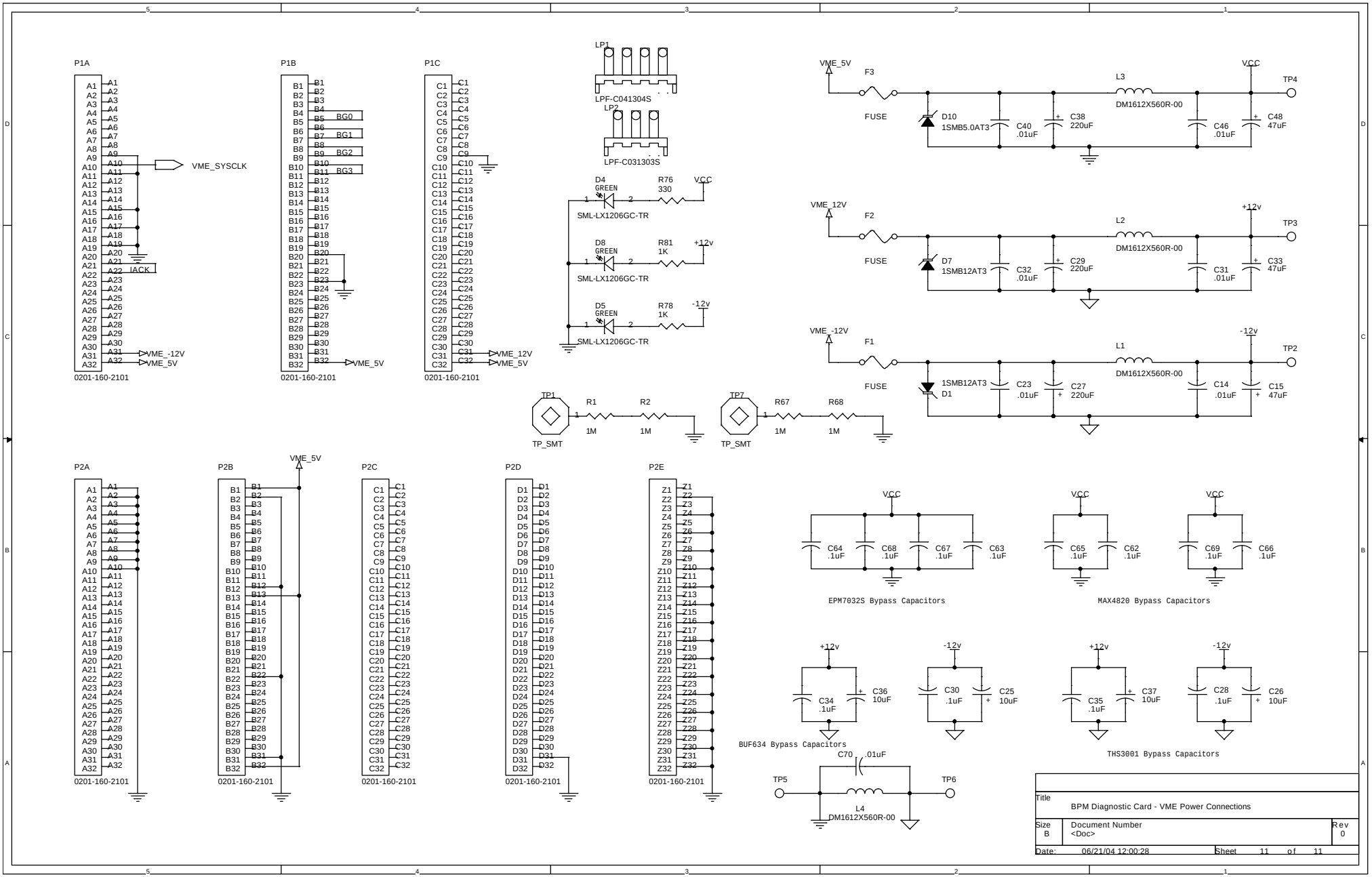
P1A
P1B
P1C
VME_SYSCLK
IACK
VME_-12V
VME_5V
BG0
BG1
BG2
BG3
0201-160-2101
LP1
LPF-C041304S
LP2
LPF-C031303S
D4 GREEN
R76 330
VCC
SML-LX1206GC-TR
D8 GREEN
R81 1K
+12v
D5 GREEN
R78 1K
-12v
TP1
R1 1M
R2 1M
TP_SMT
TP7
R67 1M
R68 1M
VME_5V
F3
FUSE
D10 1SMB5.0AT3
C40 .01uF
C38 220uF
L3 DM1612X560R-00
C46 .01uF
C48 47uF
TP4
VME_12V
F2
D7 1SMB12AT3
C32 .01uF
C29 220uF
L2 DM1612X560R-00
C31 .01uF
C33 47uF
TP3
VME_-12V
F1
1SMB12AT3 D1
C23 .01uF
C27 220uF
L1 DM1612X560R-00
C14 .01uF
C15 47uF
TP2
P2A
P2B
P2C
P2D
P2E
C64 .1uF
C68 .1uF
C67 .1uF
C63 .1uF
EPM7032S Bypass Capacitors
C65 .1uF
C62 .1uF
MAX4820 Bypass Capacitors
C69 .1uF
C66 .1uF
C34 .1uF
C36 10uF
BUF634 Bypass Capacitors
C30 .1uF
C25 10uF
C35 .1uF
C37 10uF
THS3001 Bypass Capacitors
C28 .1uF
C26 10uF
C70 .01uF
TP5
TP6
L4 DM1612X560R-00
Title
BPM Diagnostic Card - VME Power Connections
Size B
Document Number
<Doc>
Rev 0
Date: 06/21/04 12:00:28
Sheet 11 of 11