FERMILAB
ENGINEERING NOTE

NAME: BRIAN FELLENZ
DATE: 3-2-99

NOTE: 1) R_{out} = 80x 120 ohms
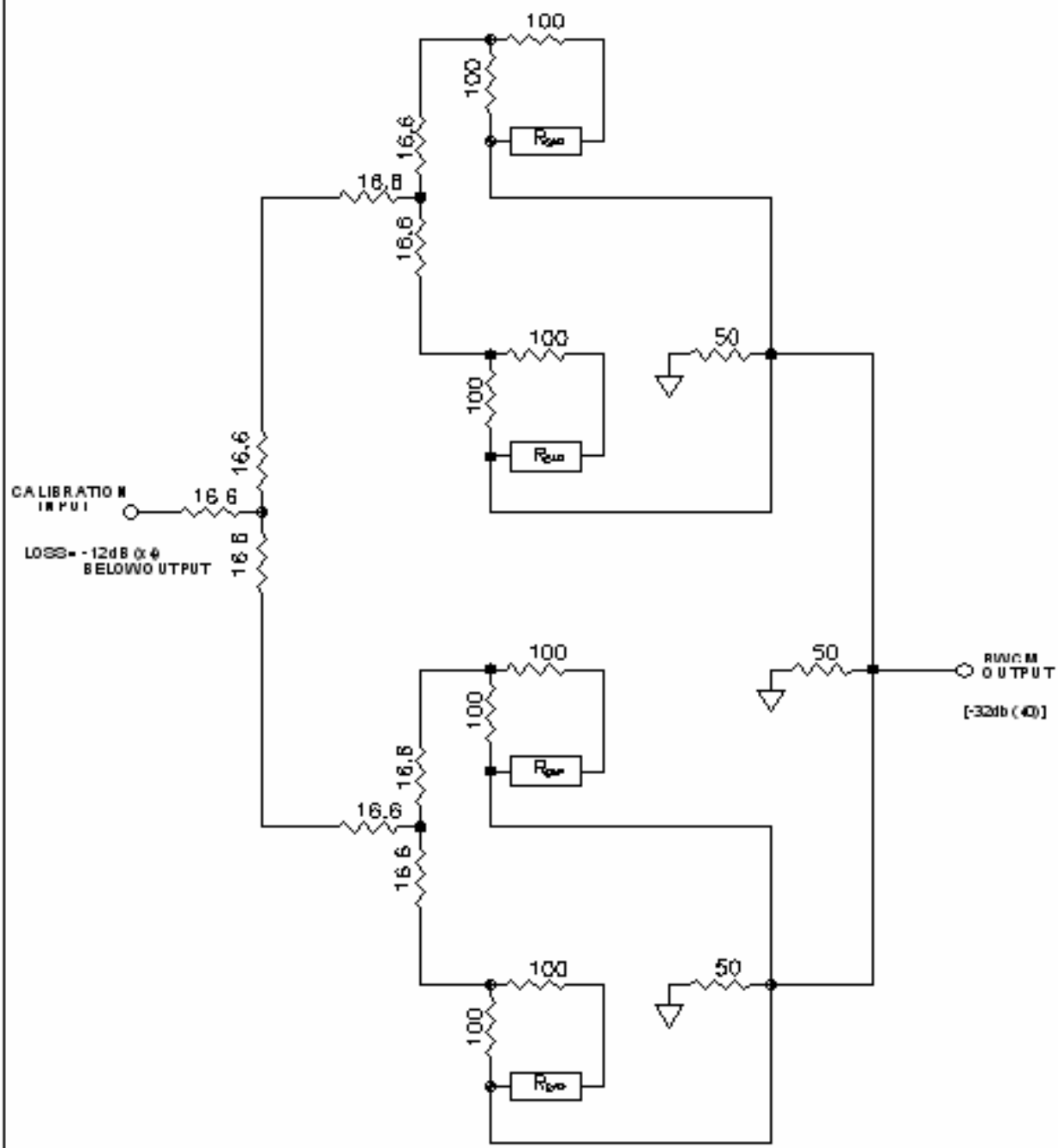
3.125 RESISTIVE WALL CURRENT MONITOR
COMBINER BOARD SCHEMATIC