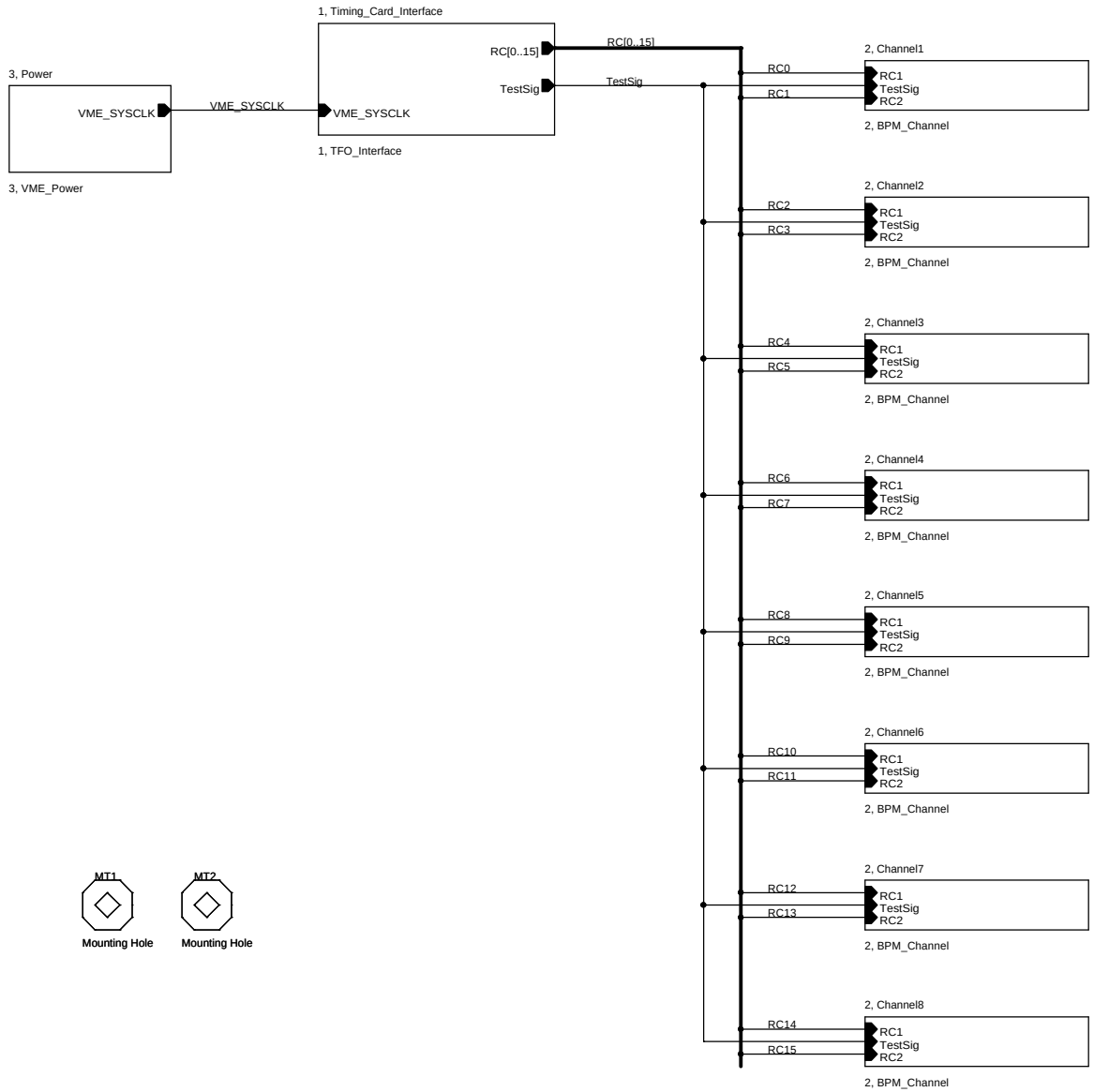

Title	BPM FILTER Card	
Size B	Document Number <Doc>	Rev 1
Date: Friday, October 15, 2004	Sheet 1 of 11	

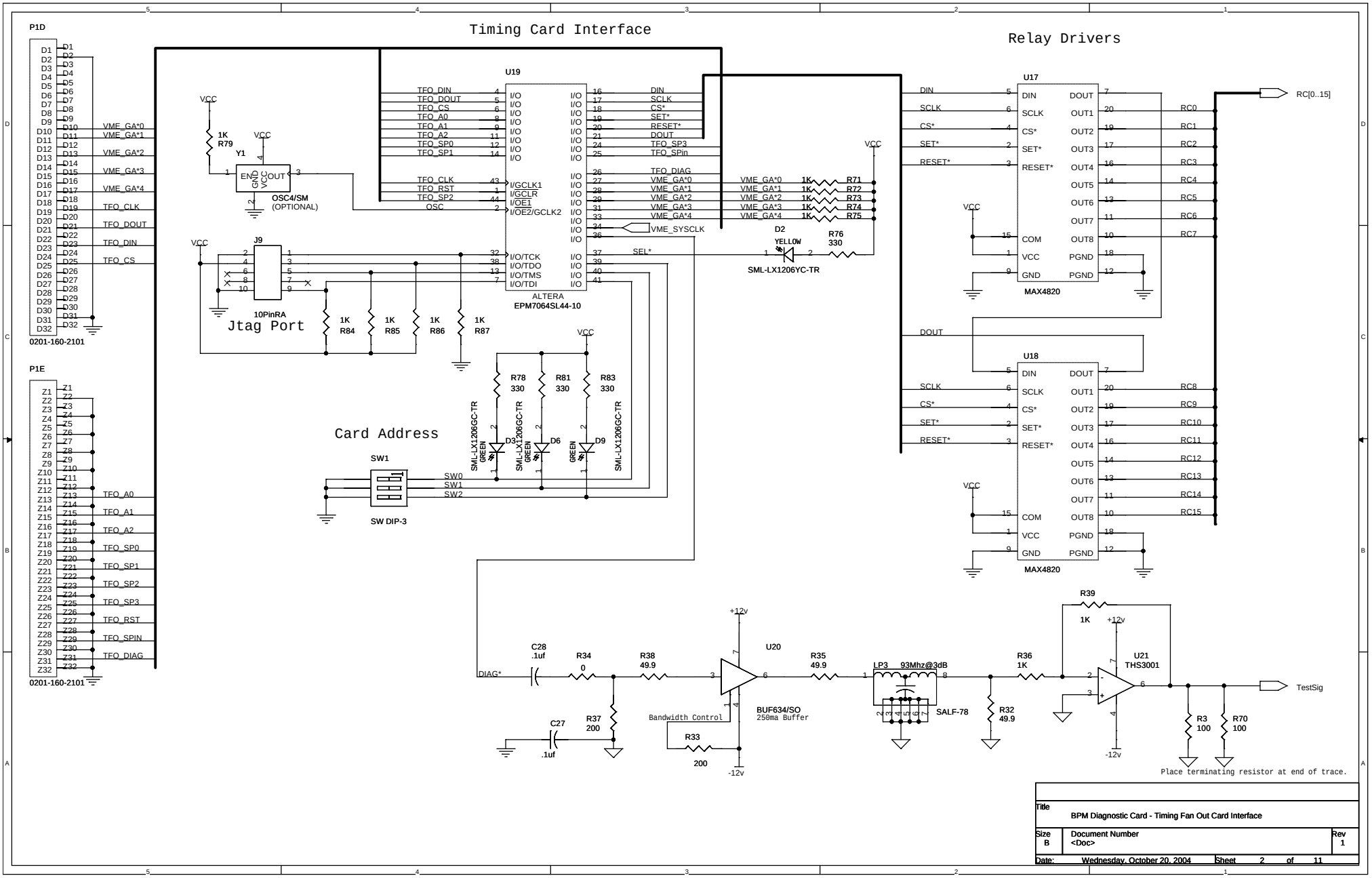
Timing Card Interface
Relay Drivers
Card Address
Jtag Port
P1D
0201-160-2101
P1E
0201-160-2101
U19
ALTERA
EPM7064SL44-10
U17
MAX4820
U18
MAX4820
U20
BUF634/SO
250ma Buffer
U21
THS3001
Y1
OSC4/SM
(OPTIONAL)
J9
10PinRA
SW1
SW DIP-3
D2
YELLOW
SML-LX1206YC-TR
SML-LX1206GC-TR
GREEN
LP3 93Mhz@3dB
SALF-78
Bandwidth Control
RC[0..15]
TestSig
Place terminating resistor at end of trace.
Title
BPM Diagnostic Card - Timing Fan Out Card Interface
Size
B
Document Number
<Doc>
Rev
1
Date: Wednesday, October 20, 2004
Sheet 2 of 11

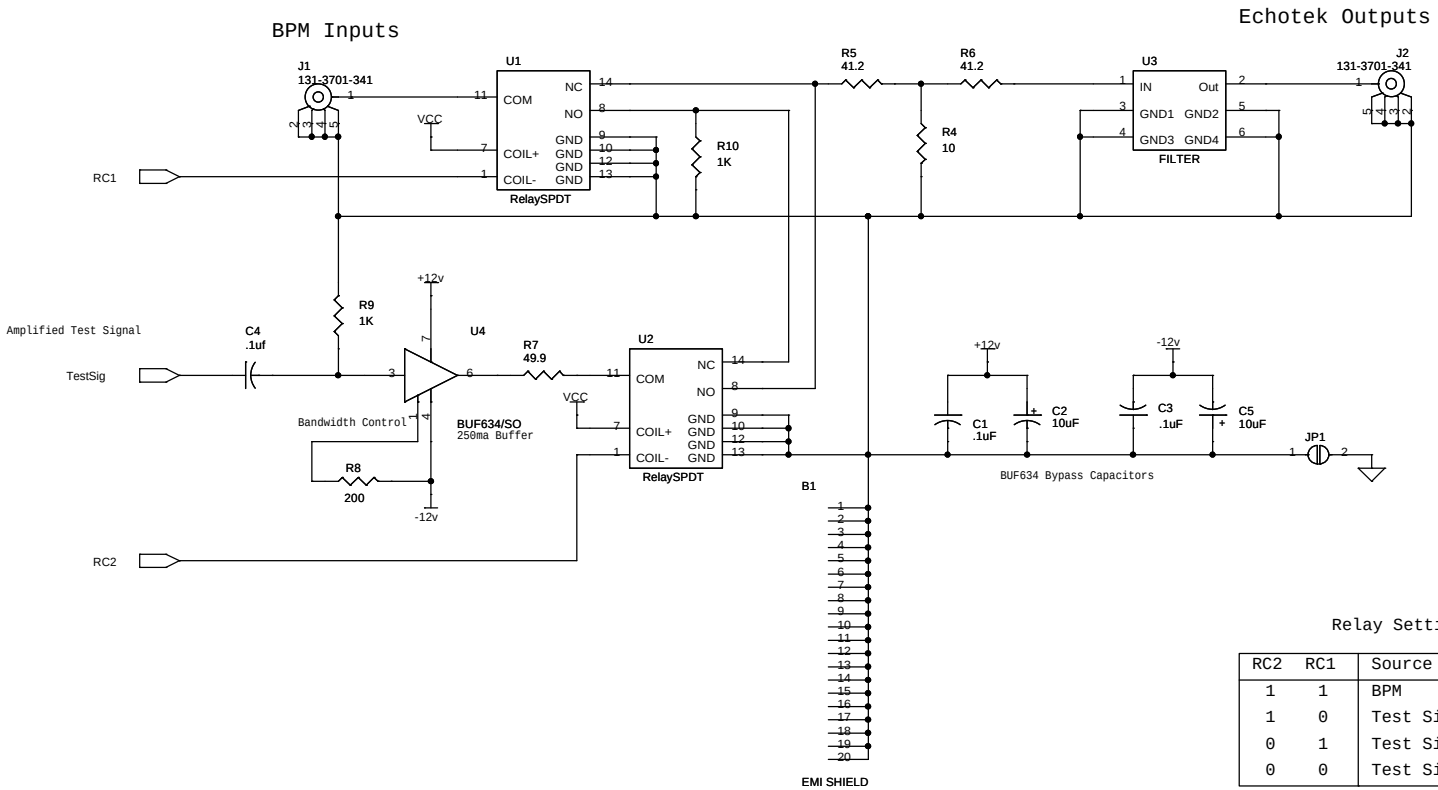

Relay Settings Table

RC2	RC1	Source	Destination
1	1	BPM	Echotek
1	0	Test Signal	BPM
0	1	Test Signal	BPM & Echotek
0	0	Test Signal	Echotek

Notes: Relay is energized when RCx=0
Defualt state is RC1=1, RC2=1
Timming Fanout Card sends a 1 to
the relay driver to energize a relay.

Title	BPM FILTER CARD - BPM Channel	
Size B	Document Number <Doc>	Rev 1
Date: Friday, October 15, 2004	Sheet 3 of 11	

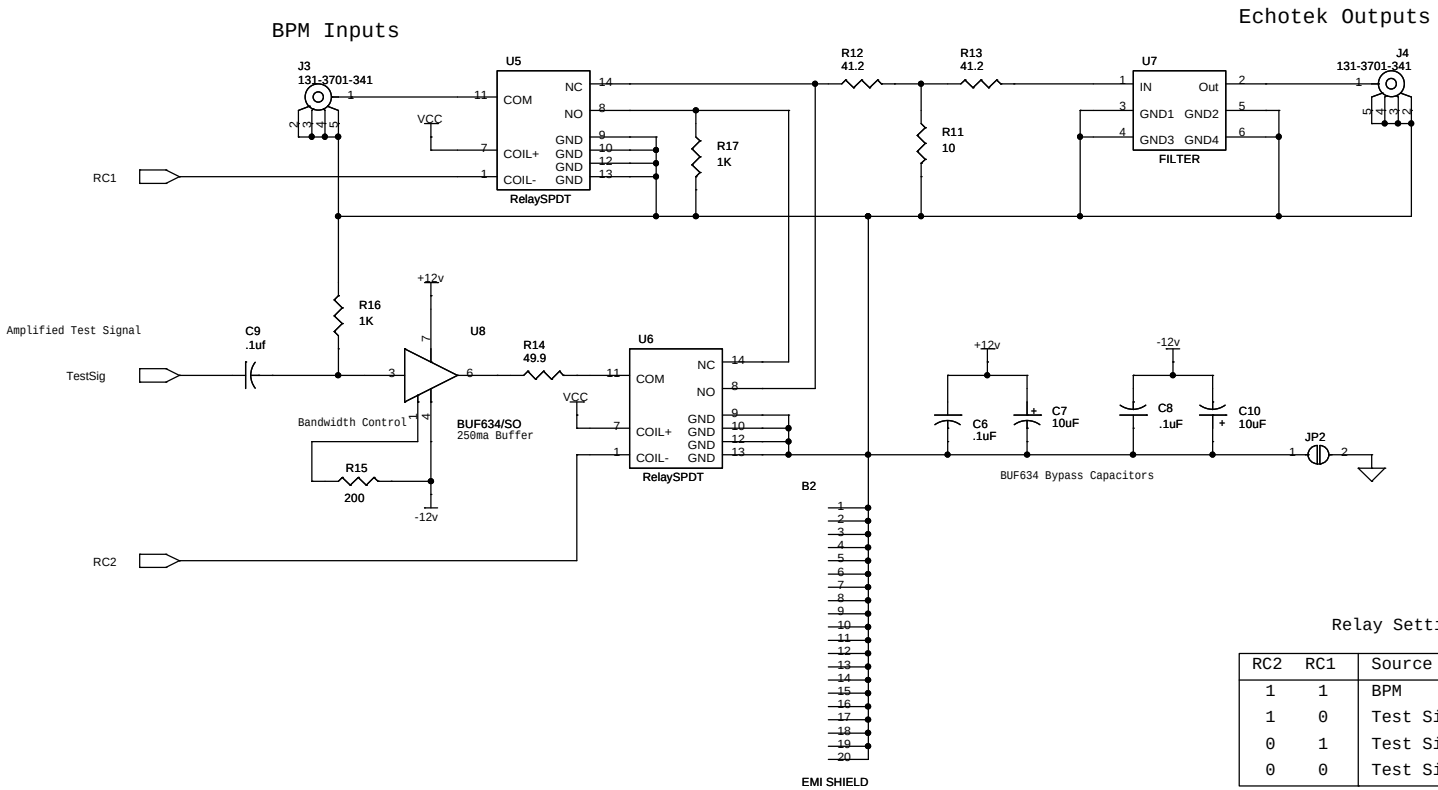

Relay Settings Table

RC2	RC1	Source	Destination
1	1	BPM	Echotek
1	0	Test Signal	BPM
0	1	Test Signal	BPM & Echotek
0	0	Test Signal	Echotek

Notes: Relay is energized when RCx=0
Defualt state is RC1=1, RC2=1
Timming Fanout Card sends a 1 to
the relay driver to energize a relay.

Title	BPM FILTER CARD - BPM Channel	
Size B	Document Number <Doc>	Rev 1
Date: Friday, October 15, 2004	Sheet 4 of 11	

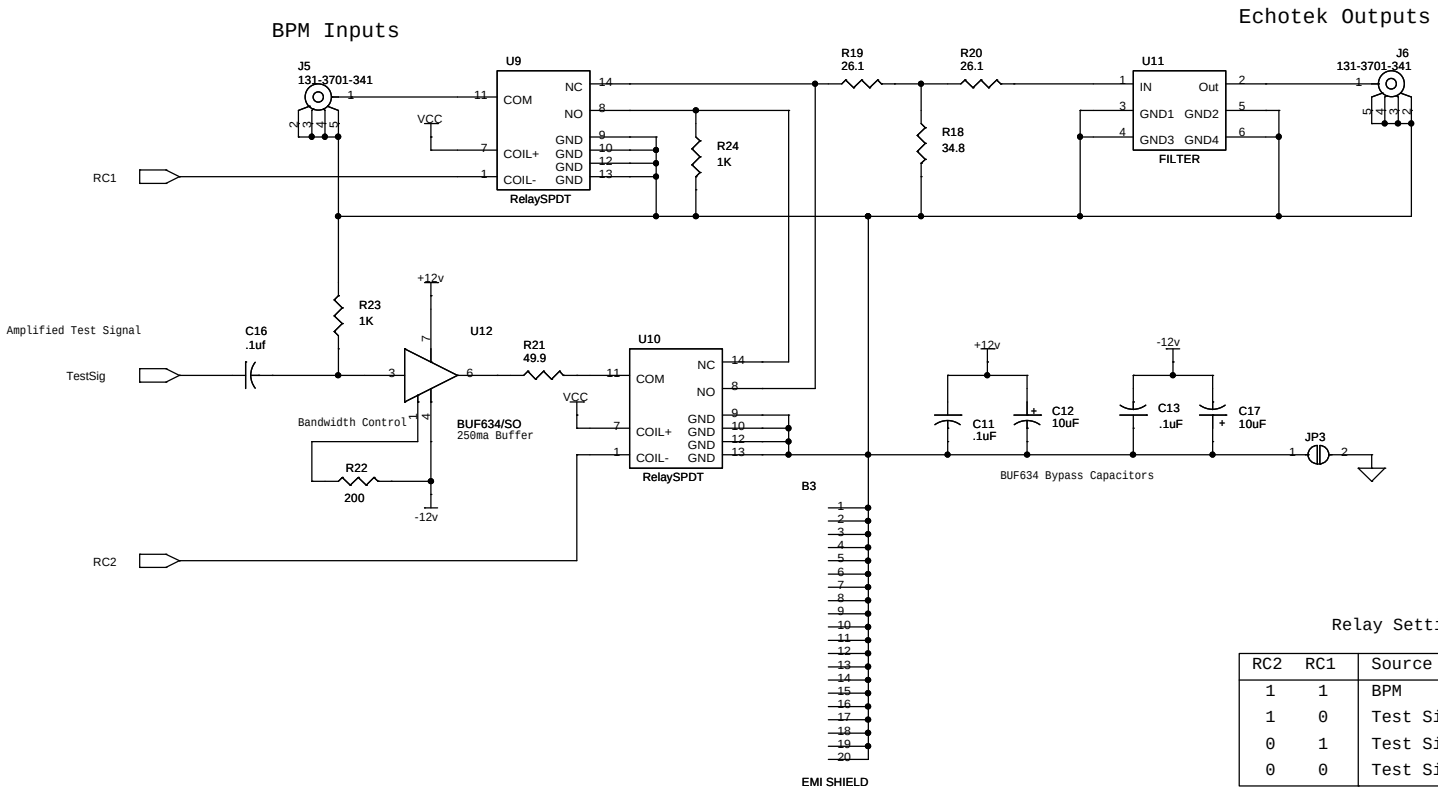

Relay Settings Table

RC2	RC1	Source	Destination
1	1	BPM	Echotek
1	0	Test Signal	BPM
0	1	Test Signal	BPM & Echotek
0	0	Test Signal	Echotek

Notes: Relay is energized when RCx=0
Defualt state is RC1=1, RC2=1
Timming Fanout Card sends a 1 to
the relay driver to energize a relay.

Title	BPM FILTER CARD - BPM Channel	
Size B	Document Number <Doc>	Rev 1
Date: Friday, October 15, 2004	Sheet 5 of 11	

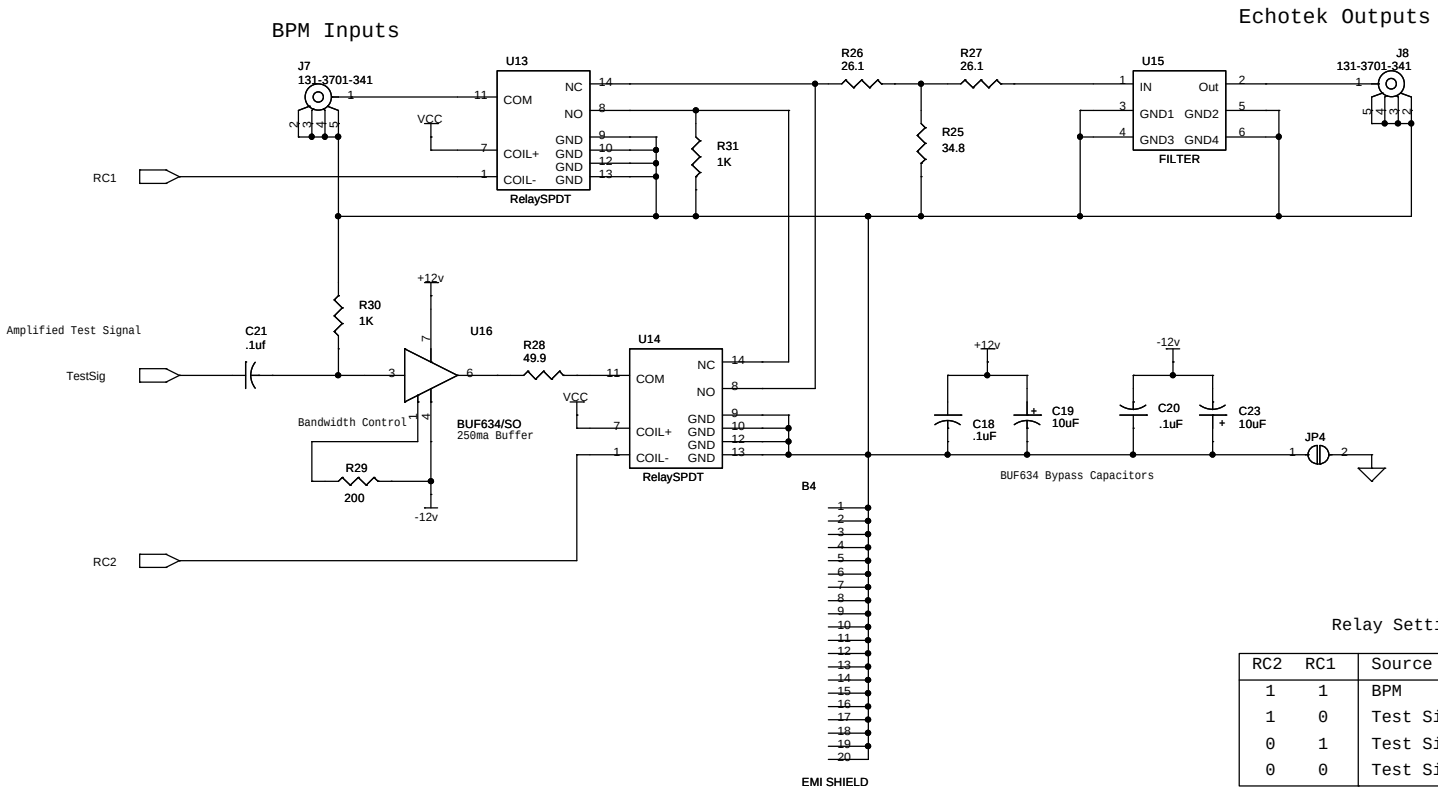

Relay Settings Table

RC2	RC1	Source	Destination
1	1	BPM	Echotek
1	0	Test Signal	BPM
0	1	Test Signal	BPM & Echotek
0	0	Test Signal	Echotek

Notes: Relay is energized when RCx=0
Defualt state is RC1=1, RC2=1
Timming Fanout Card sends a 1 to
the relay driver to energize a relay.

Title	BPM FILTER CARD - BPM Channel	
Size B	Document Number <Doc>	Rev 1
Date: Friday, October 15, 2004	Sheet 6 of 11	

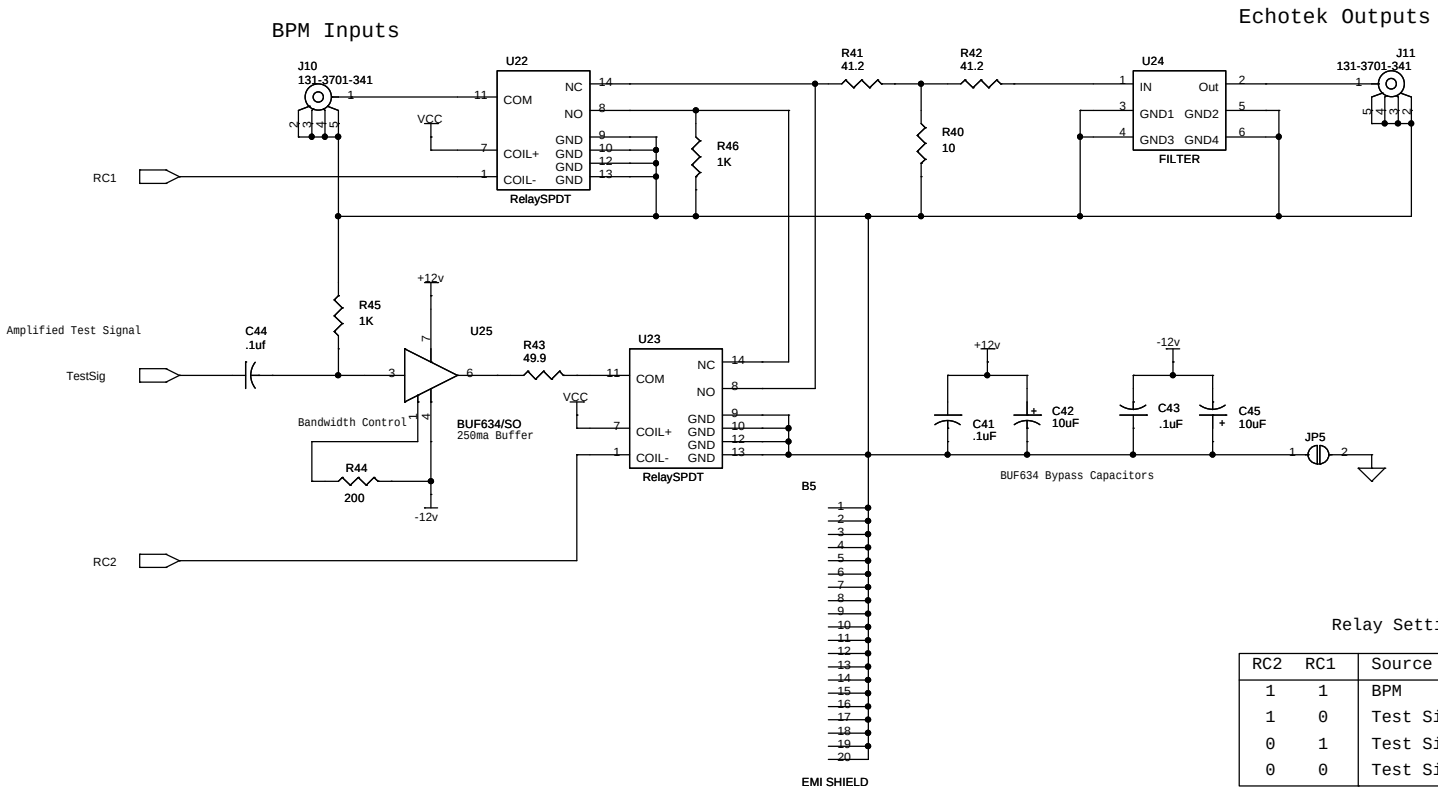

Relay Settings Table

RC2	RC1	Source	Destination
1	1	BPM	Echotek
1	0	Test Signal	BPM
0	1	Test Signal	BPM & Echotek
0	0	Test Signal	Echotek

Notes: Relay is energized when RCx=0
Defualt state is RC1=1, RC2=1
Timming Fanout Card sends a 1 to
the relay driver to energize a relay.

Title	BPM FILTER CARD - BPM Channel	
Size B	Document Number <Doc>	Rev 1
Date: Friday, October 15, 2004	Sheet 7 of 11	

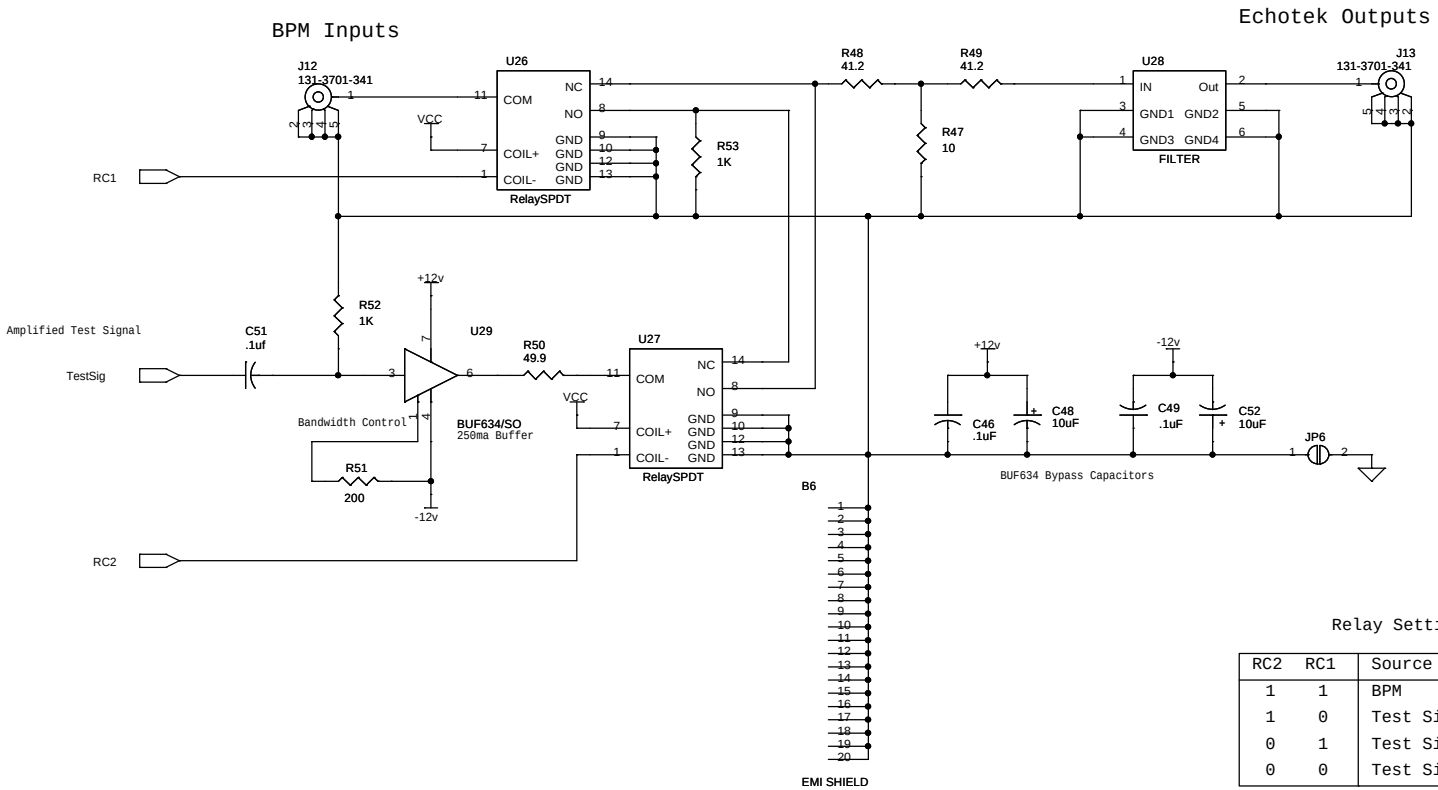

Relay Settings Table

RC2	RC1	Source	Destination
1	1	BPM	Echotek
1	0	Test Signal	BPM
0	1	Test Signal	BPM & Echotek
0	0	Test Signal	Echotek

Notes: Relay is energized when RCx=0
Defualt state is RC1=1, RC2=1
Timming Fanout Card sends a 1 to
the relay driver to energize a relay.

Title	BPM FILTER CARD - BPM Channel	
Size B	Document Number <Doc>	Rev 1
Date: Friday, October 15, 2004	Sheet 8 of 11	

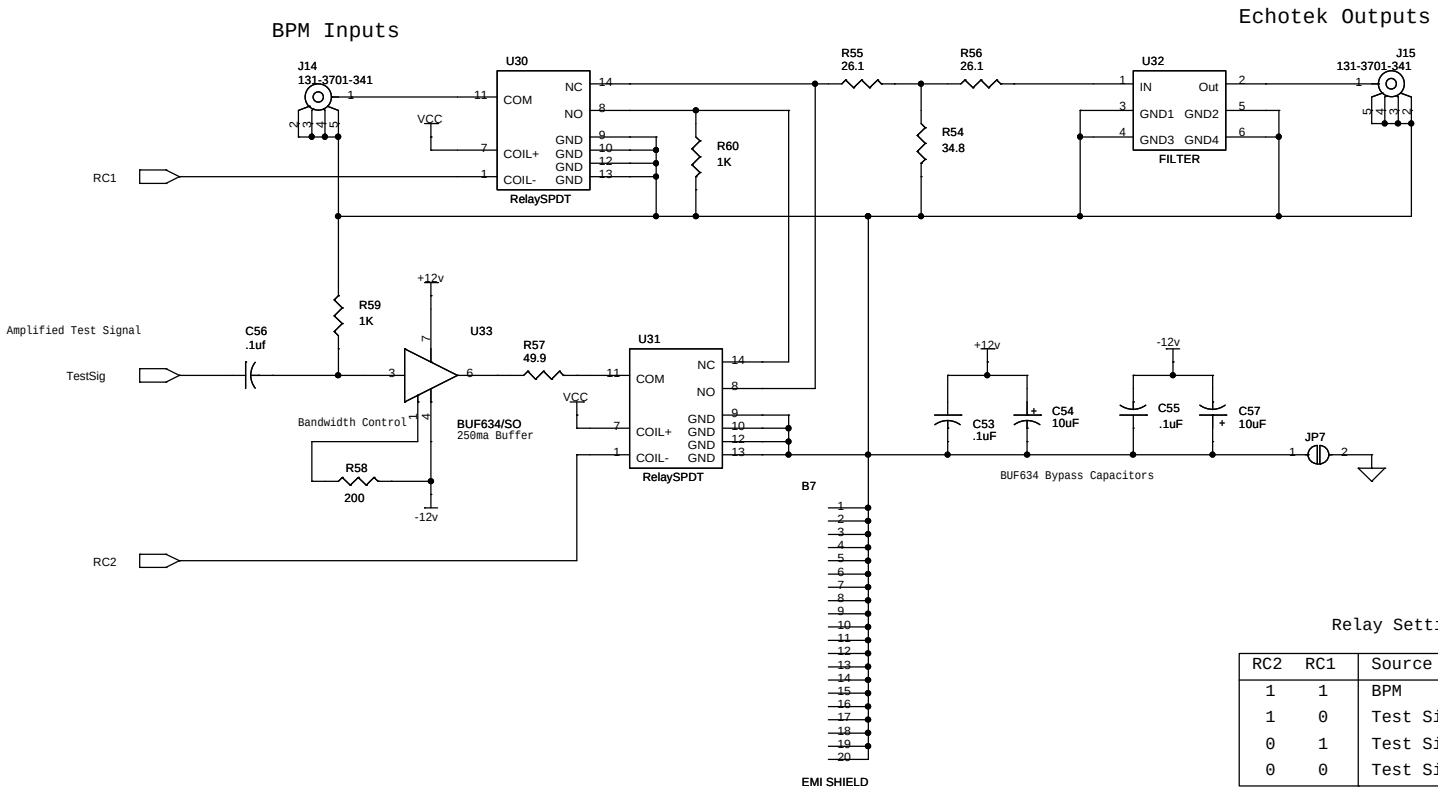

Relay Settings Table

RC2	RC1	Source	Destination
1	1	BPM	Echotek
1	0	Test Signal	BPM
0	1	Test Signal	BPM & Echotek
0	0	Test Signal	Echotek

Notes: Relay is energized when RCx=0
Defualt state is RC1=1, RC2=1
Timming Fanout Card sends a 1 to
the relay driver to energize a relay.

Title	BPM FILTER CARD - BPM Channel	
Size B	Document Number <Doc>	Rev 1
Date: Friday, October 15, 2004	Sheet 9 of 11	

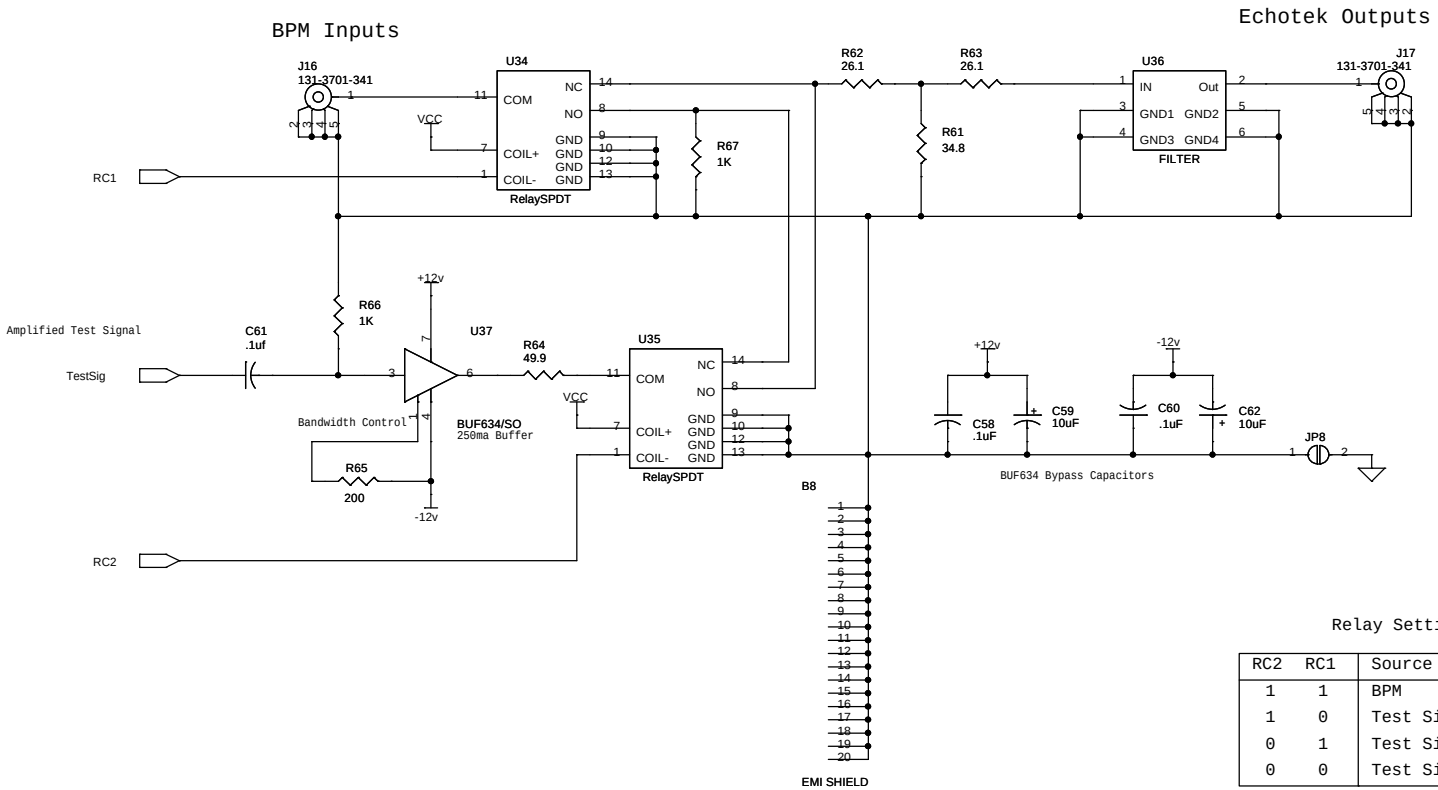

Relay Settings Table

RC2	RC1	Source	Destination
1	1	BPM	Echotek
1	0	Test Signal	BPM
0	1	Test Signal	BPM & Echotek
0	0	Test Signal	Echotek

Notes: Relay is energized when RCx=0
Defualt state is RC1=1, RC2=1
Timming Fanout Card sends a 1 to
the relay driver to energize a relay.

Title	BPM FILTER CARD - BPM Channel	
Size B	Document Number <Doc>	Rev 1
Date: Friday, October 15, 2004	Sheet 10 of 11	

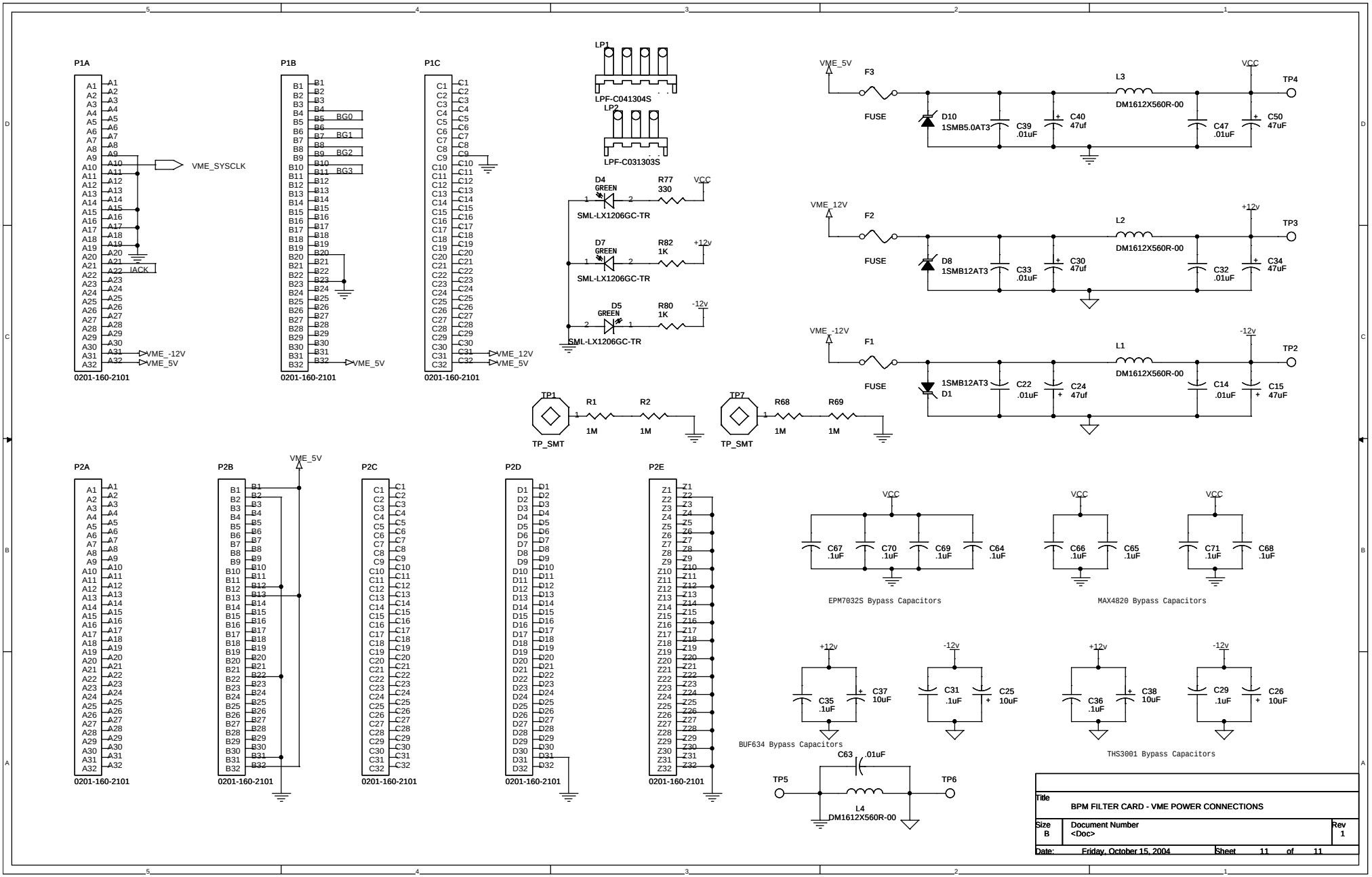
P1A
VME_SYSCLK
IACK
VME_-12V
VME_5V
0201-160-2101
P1B
BG0
BG1
BG2
BG3
VME_5V
0201-160-2101
P1C
VME_-12V
VME_5V
0201-160-2101
LP1
LPF-C041304S
LP2
LPF-C031303S
D4
GREEN
R77
330
VCC
SML-LX1206GC-TR
D7
GREEN
R82
1K
+12v
SML-LX1206GC-TR
D5
GREEN
R80
1K
-12v
SML-LX1206GC-TR
VME_5V
F3
FUSE
D10
1SMB5.0AT3
C39
.01uF
C40
47uf
L3
DM1612X560R-00
C47
.01uF
VCC
C50
47uF
TP4
VME_12V
F2
FUSE
D8
1SMB12AT3
C33
.01uF
C30
47uf
L2
DM1612X560R-00
C32
.01uF
+12v
C34
47uF
TP3
VME_-12V
F1
FUSE
1SMB12AT3
D1
C22
.01uF
C24
47uf
L1
DM1612X560R-00
C14
.01uF
-12v
C15
47uF
TP2
TP1
R1
1M
R2
1M
TP_SMT
TP7
R68
1M
R69
1M
TP_SMT
P2A
0201-160-2101
P2B
VME_5V
0201-160-2101
P2C
0201-160-2101
P2D
0201-160-2101
P2E
0201-160-2101
VCC
C67
.1uF
C70
.1uF
C69
.1uF
C64
.1uF
EPM7032S Bypass Capacitors
VCC
C66
.1uF
C65
.1uF
VCC
C71
.1uF
C68
.1uF
MAX4820 Bypass Capacitors
+12v
C35
.1uF
C37
10uF
-12v
C31
.1uF
C25
10uF
BUF634 Bypass Capacitors
+12v
C36
.1uF
C38
10uF
-12v
C29
.1uF
C26
10uF
THS3001 Bypass Capacitors
C63
.01uF
TP5
TP6
L4
DM1612X560R-00
Title
BPM FILTER CARD - VME POWER CONNECTIONS
Size
B
Document Number
<Doc>
Rev
1
Date:
Friday, October 15, 2004
Sheet
11
of
11