LHC

Quench Protection & Energy Extraction Systems

Overview

Bob Flora LARP 2006 June 27

The Challenge:

LHC Guide Field Stored Energy

10.6 GJ

Adiabatic Temperature Rise

At 13 KA, it takes only 200 mS to destroy a 15 meter magnet.

$$\int_{t_0}^{t_1} I(t')^2 dt' = A \cdot A_{cu} \cdot \int_{T_0}^{T} \frac{c(T')}{\rho(T')} dT' \equiv F(T)$$

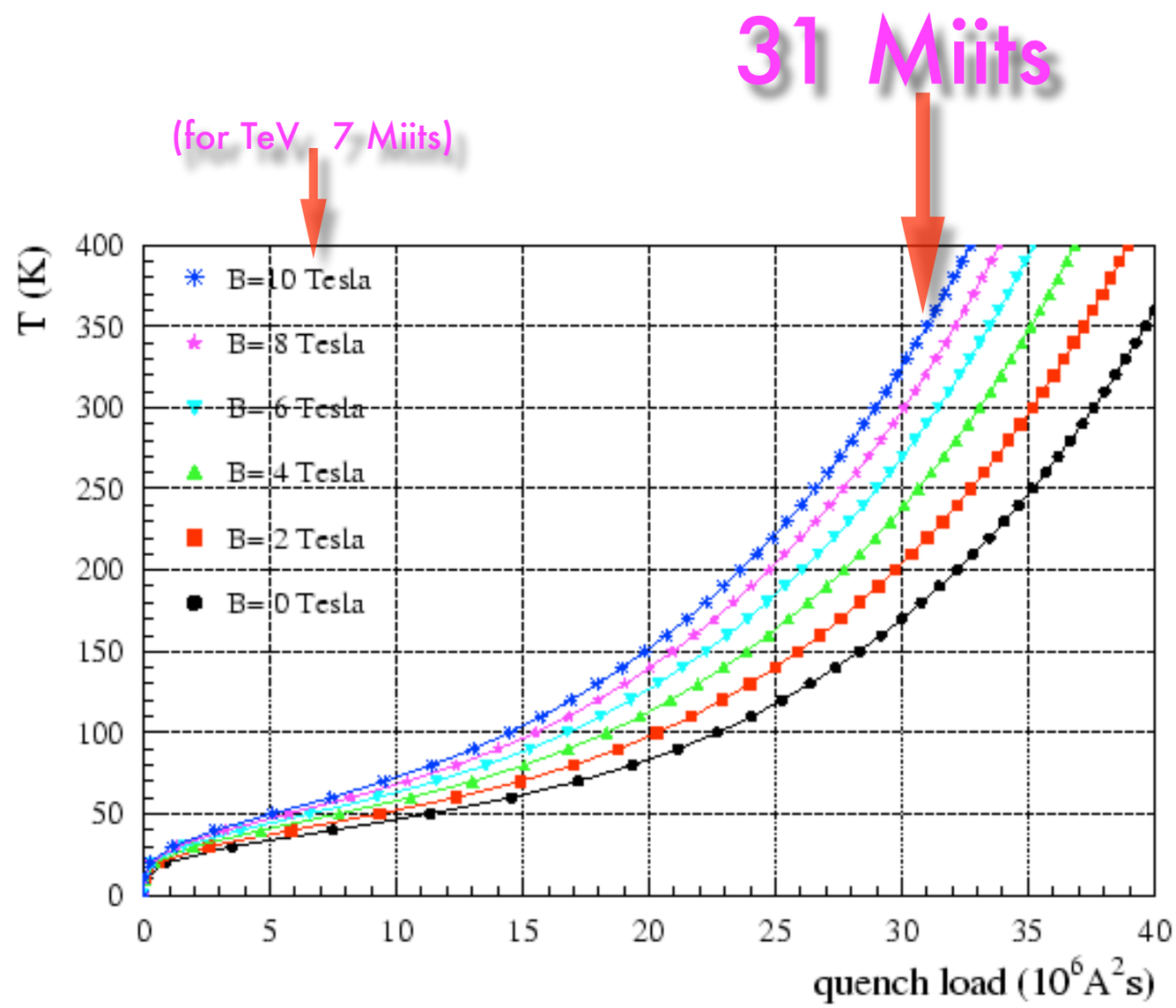

Figure 3.1: Calculated hot spot temperature as a function of the quench load for the outer cable of the LHC dipole magnet ($RRR = 100$, $r_{cu/sc} = 1.9$, $A_{tot} = 19.2442 mm^2$).

MIIT curves T= f(∫I ² dt) for different Cu/Sc (top) and RRR (bottom) at peak field in the outer layer of MB

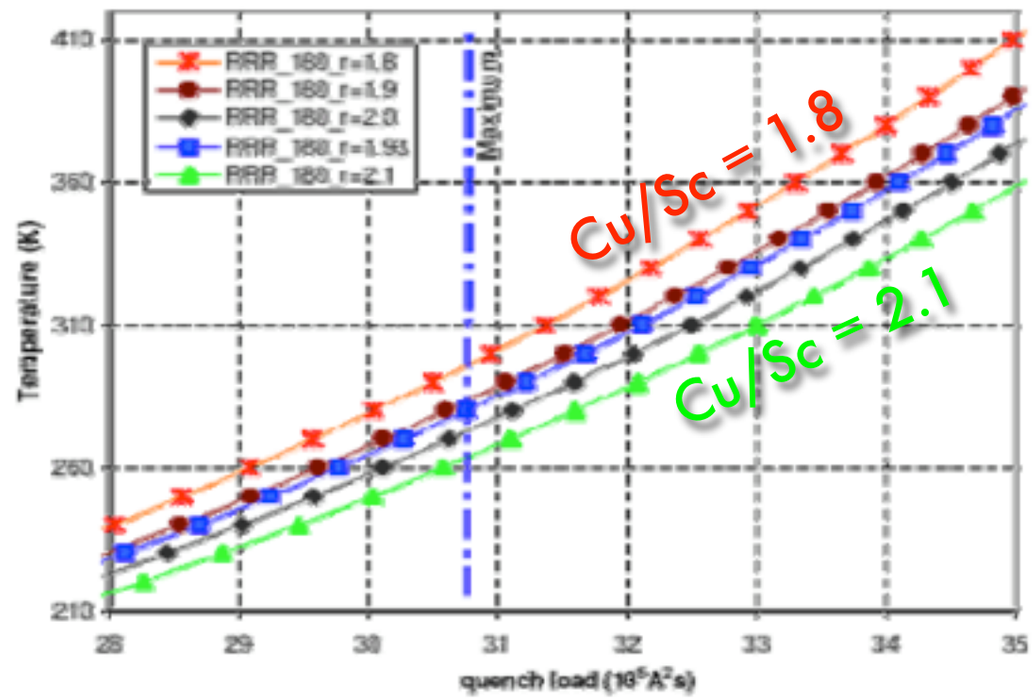

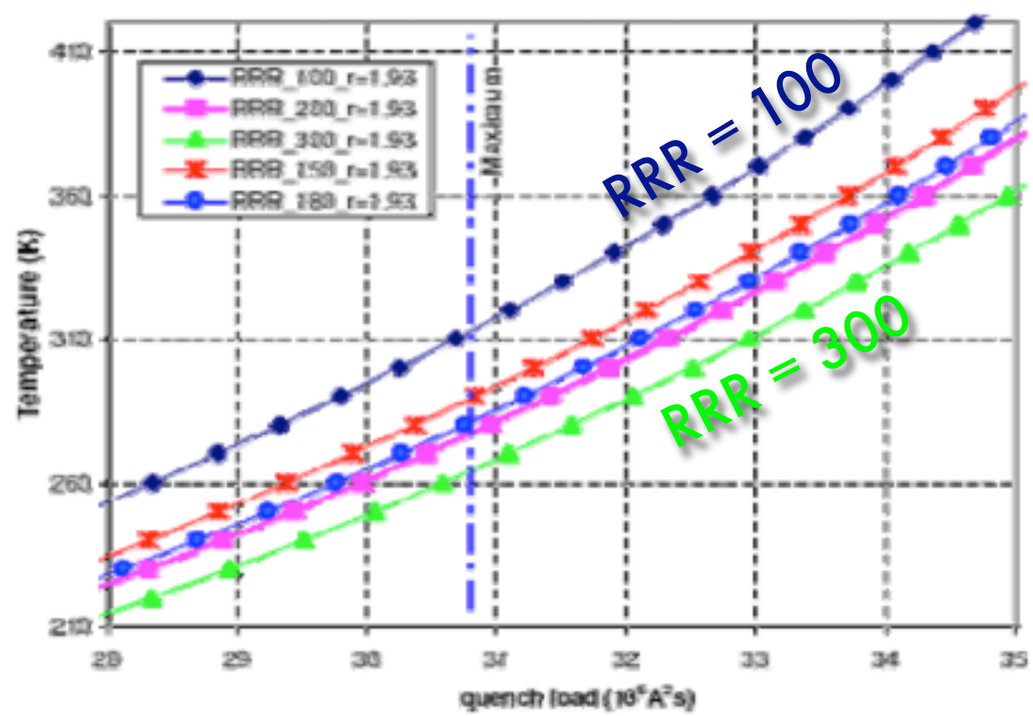

Measured transversal velocity in a MQT quadrupole

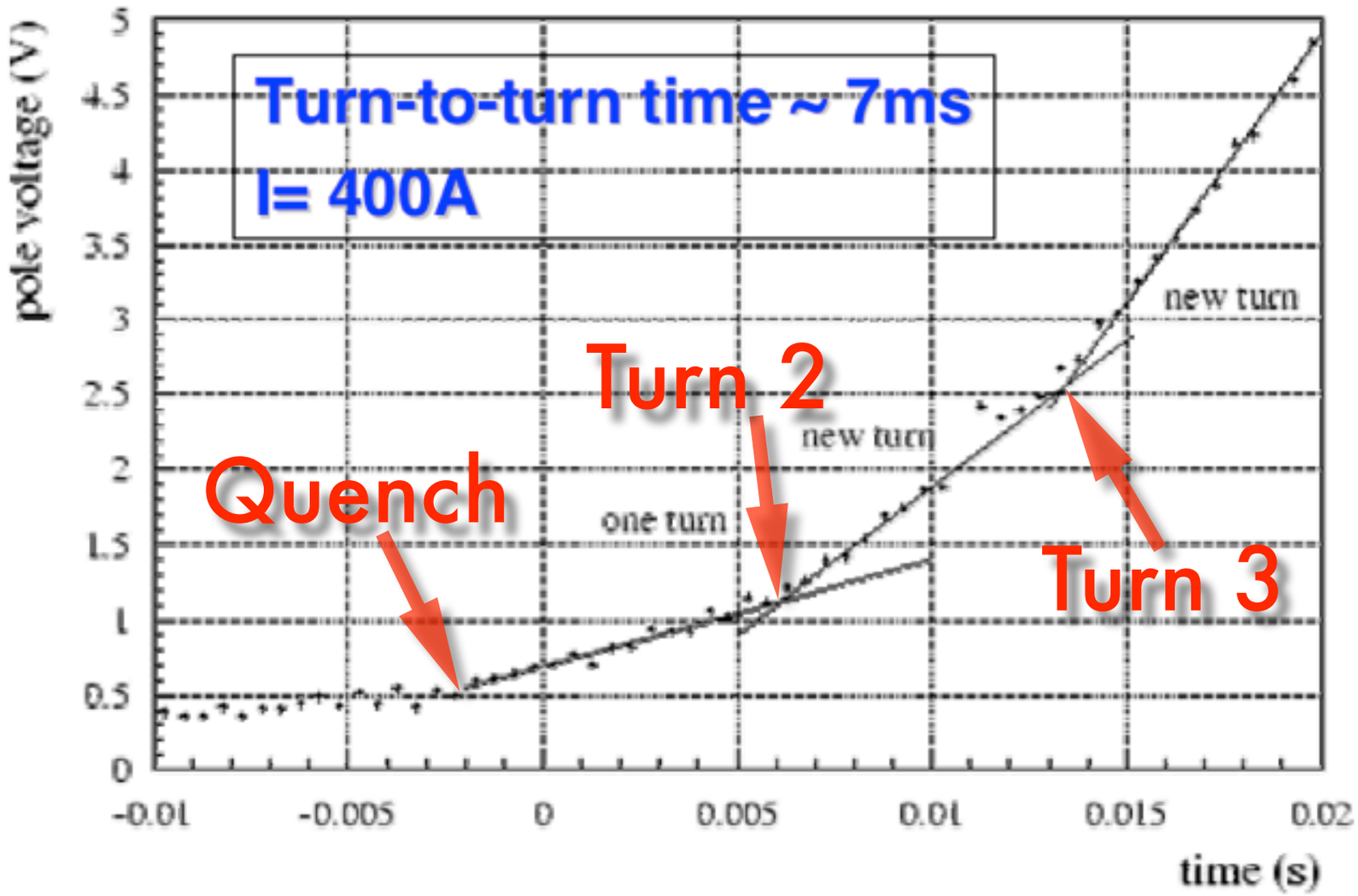

LHC Large Hadron Collider - What needs powering?

- **The beams are controlled by:**
  - **1232 SC Main Dipole magnets to bend the beams (in 8 circuits of 13 kA)**
  - **392 SC Main Quadrupole magnets to focus the beams (in 16 circuits of 13kA)**
  - **124 SC Quadrupole / Dipole Insertion magnets (in 196 circuits of ~ 6 kA)**
  - **6340 SC Corrector magnets (in 1460 circuits 60 to 600A)**
  - **112 Warm magnets (in 38 circuits 600 to 900A)**
  - **SC RF Cavities to accelerate and stabilize the beam**

⇨ **All ~8000 magnets need to be powered in a very controlled and precise manner (Total current 1.72 x 10^6 A in 1718 different circuits)**

⇨ **Electrical stored energy ~ 10.6 GJ, in all the main dipoles**

- Hera 0.5 GJ, Tevatron 0.3 GJ, RHIC 0.2 GJ

⇨ **LHC has to fit into and use the existing infrastructure of LEP. This gives constraints** (but saves a lot of money)

LHC is divided into 8 Sectors Each Seperately Excited.

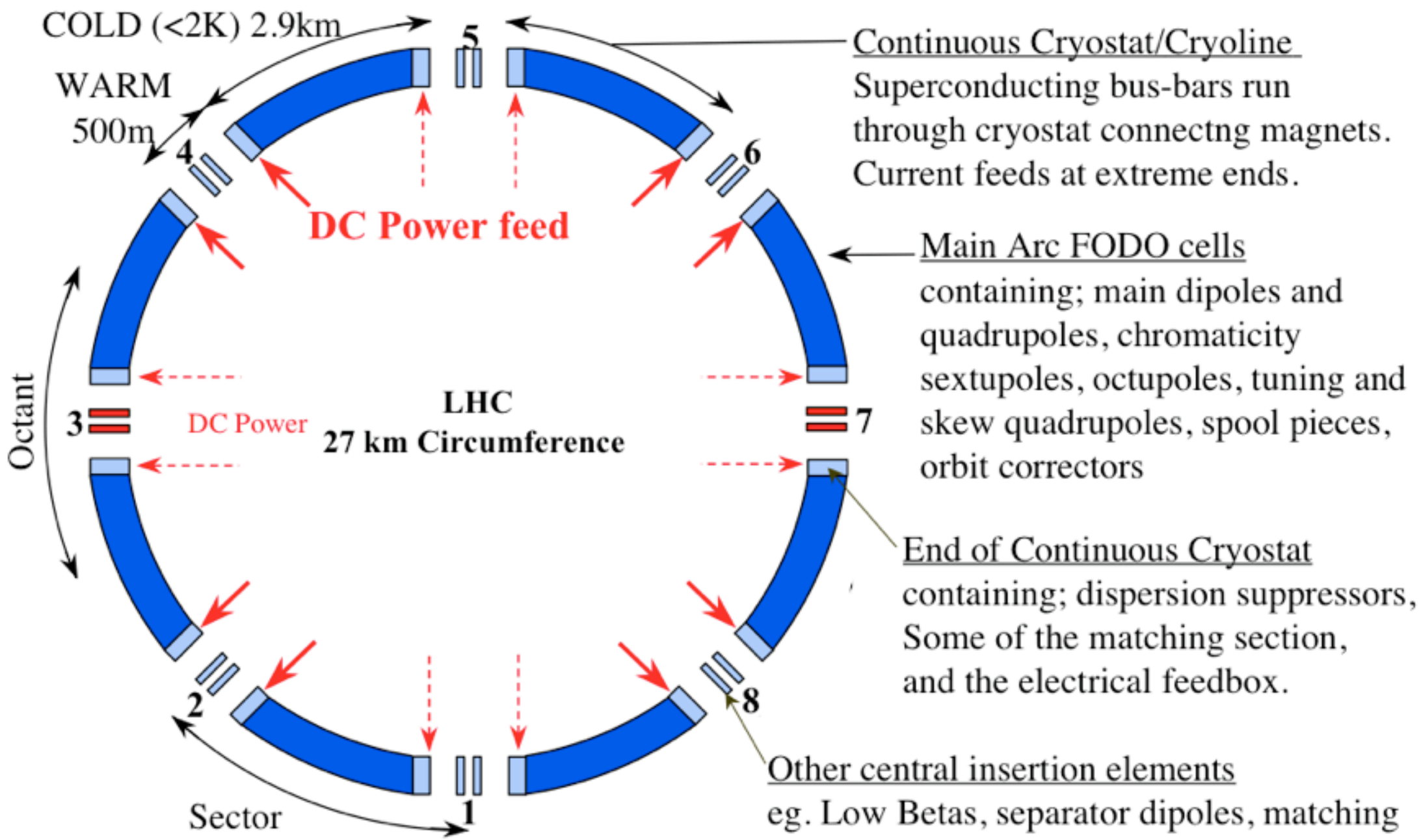

Main Dipoles -- Segmentation into 8 sectors

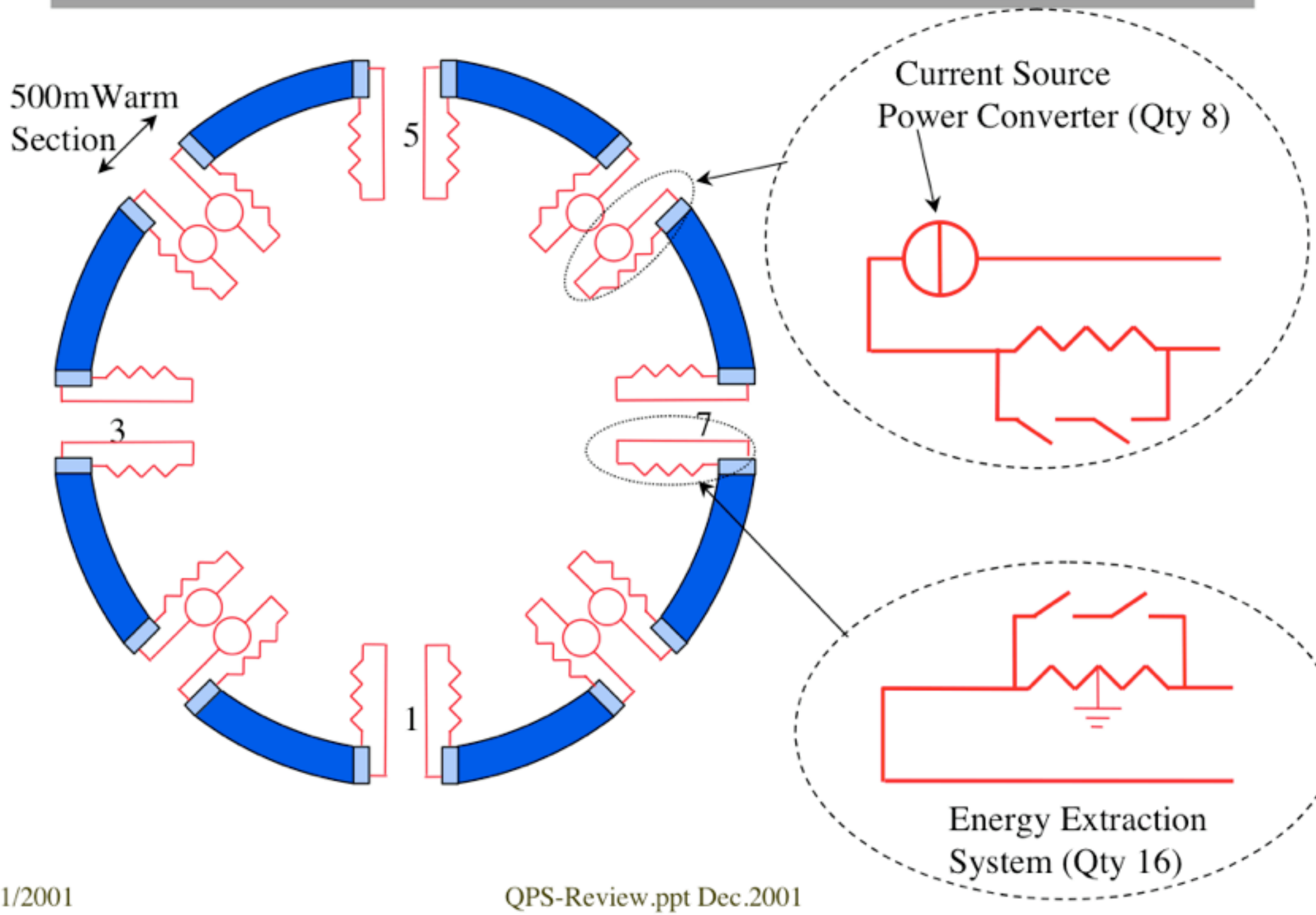

Main Dipole Powering Scheme for one sector (1/8 of LHC)

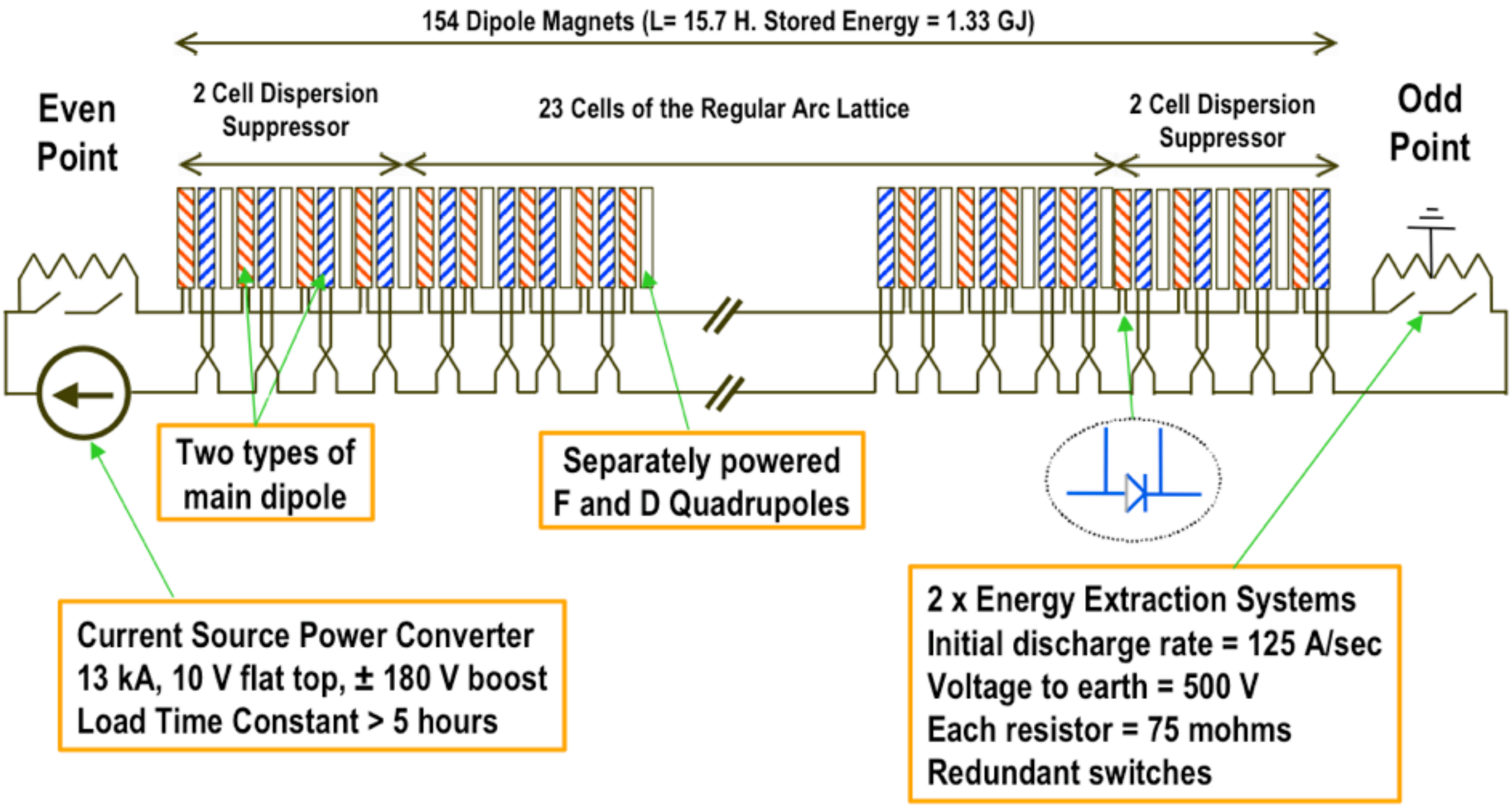

Dispersion Suppressor in points 1, 2, 4, 5, 6 and 8

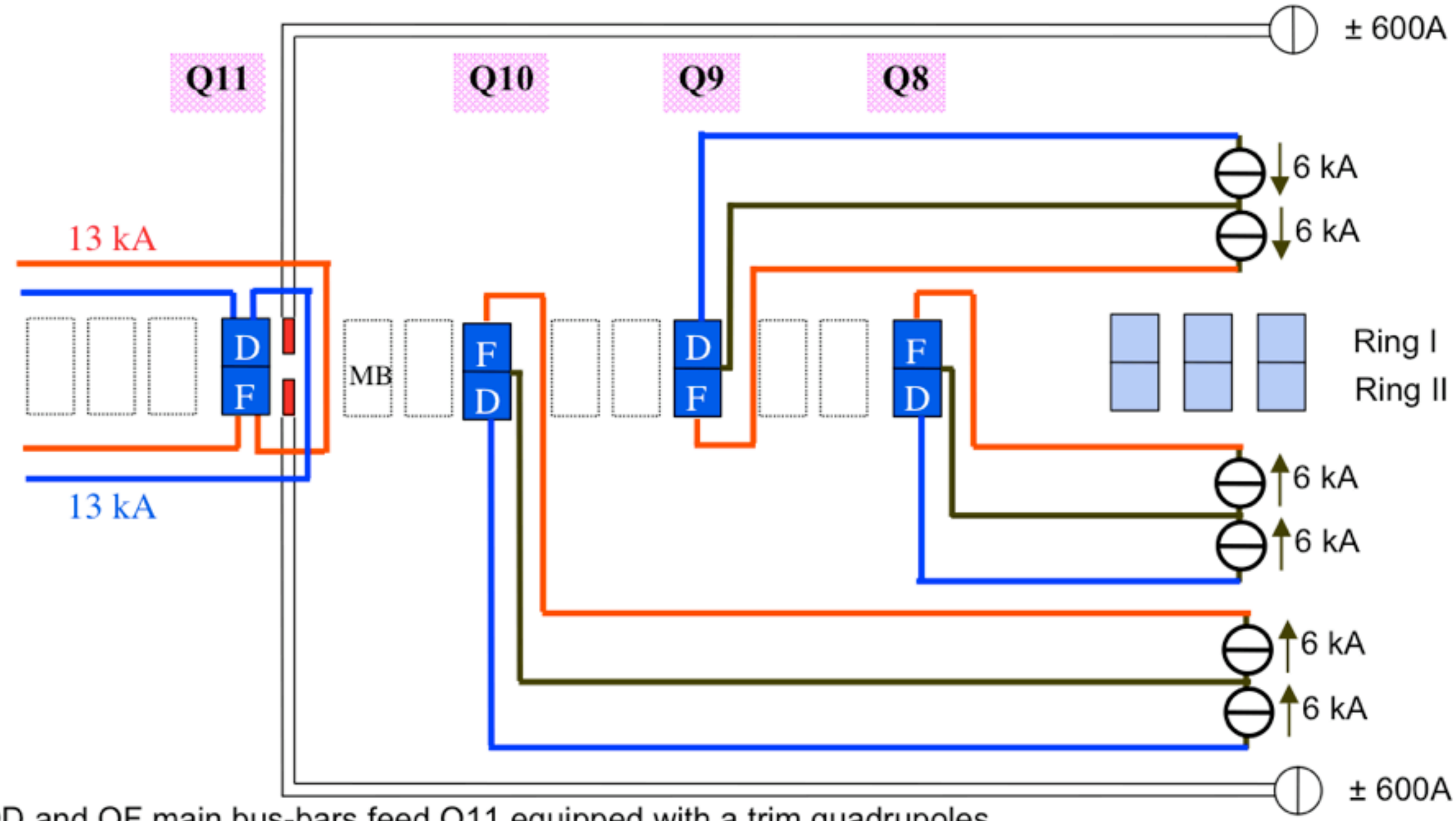

QD and QF main bus-bars feed Q11 equipped with a trim quadrupoles
Q10, Q9 and Q8 are individually powered with centre point

Left side only shown
(Same on right side)

Trims on Dispersion Suppressor in points 3 and 7

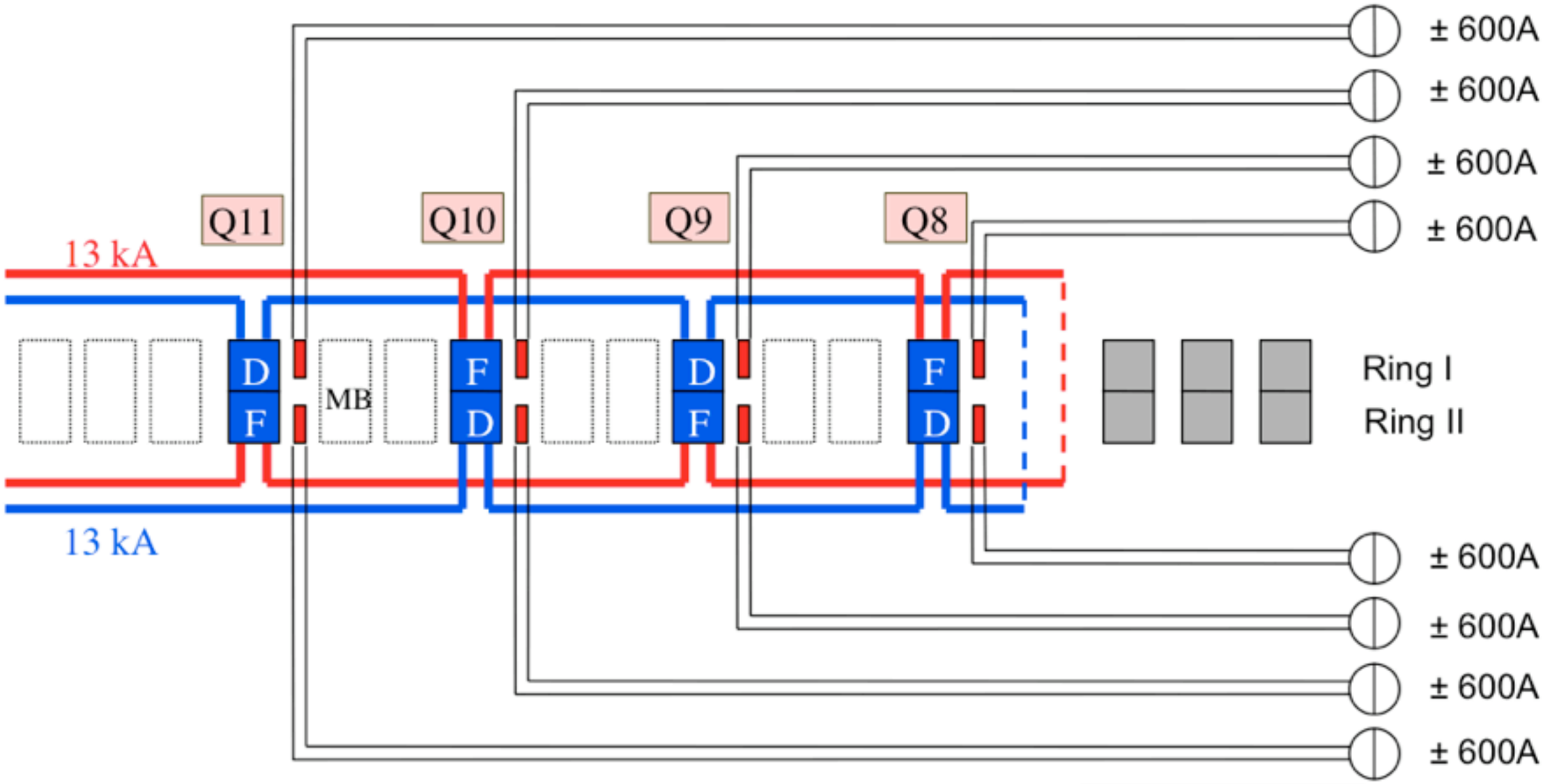

QD and QF main bus-bars feed magnets of the insertion.
Trim Quads and low current power converters trim required gradient.

Left side only shown
(Same on right side)

Matching Section, -- Points 2 and 8

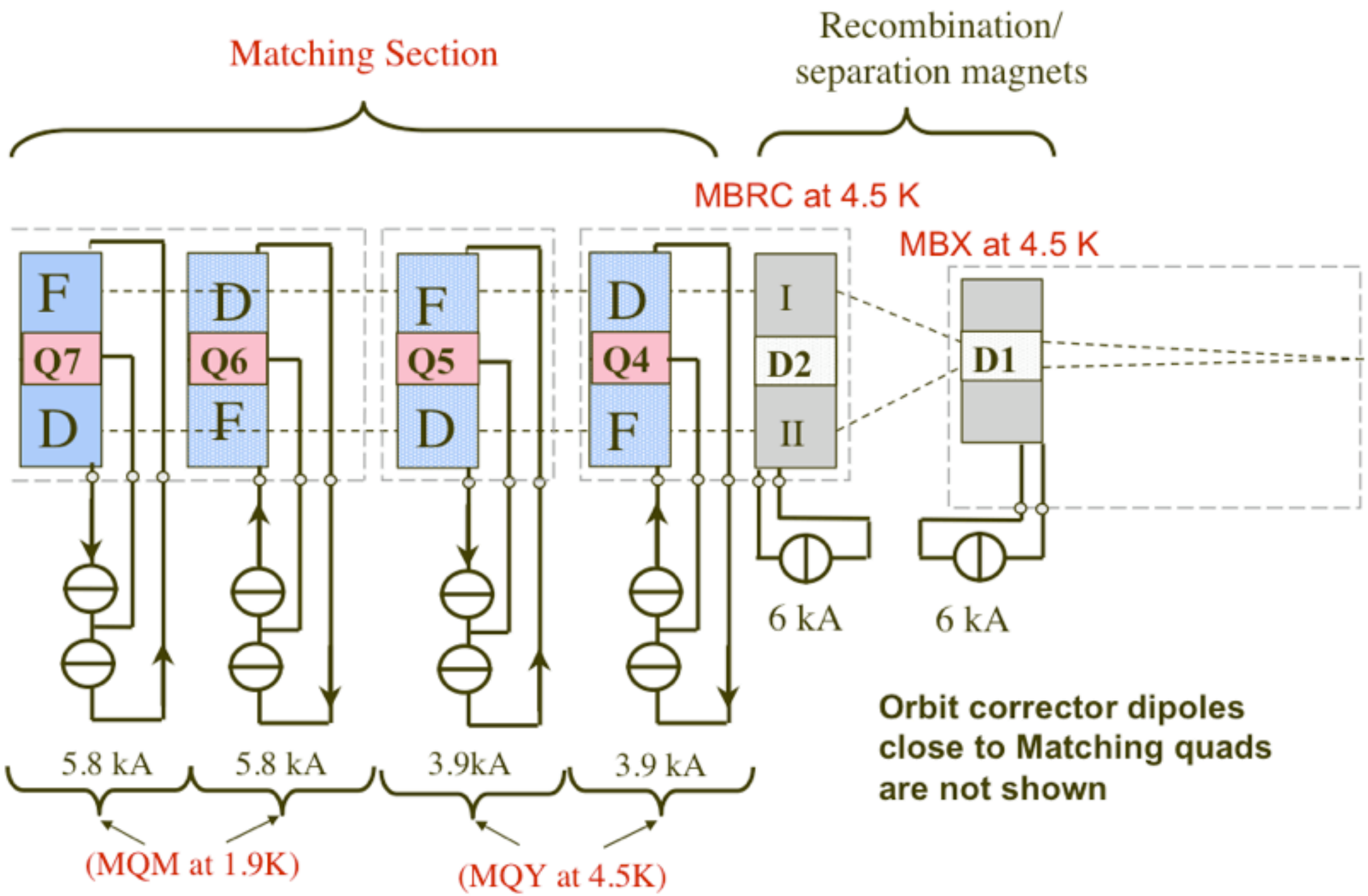

Orbit corrector dipoles close to Matching quads are not shown

Inner Triplet -- Points 2 and 8

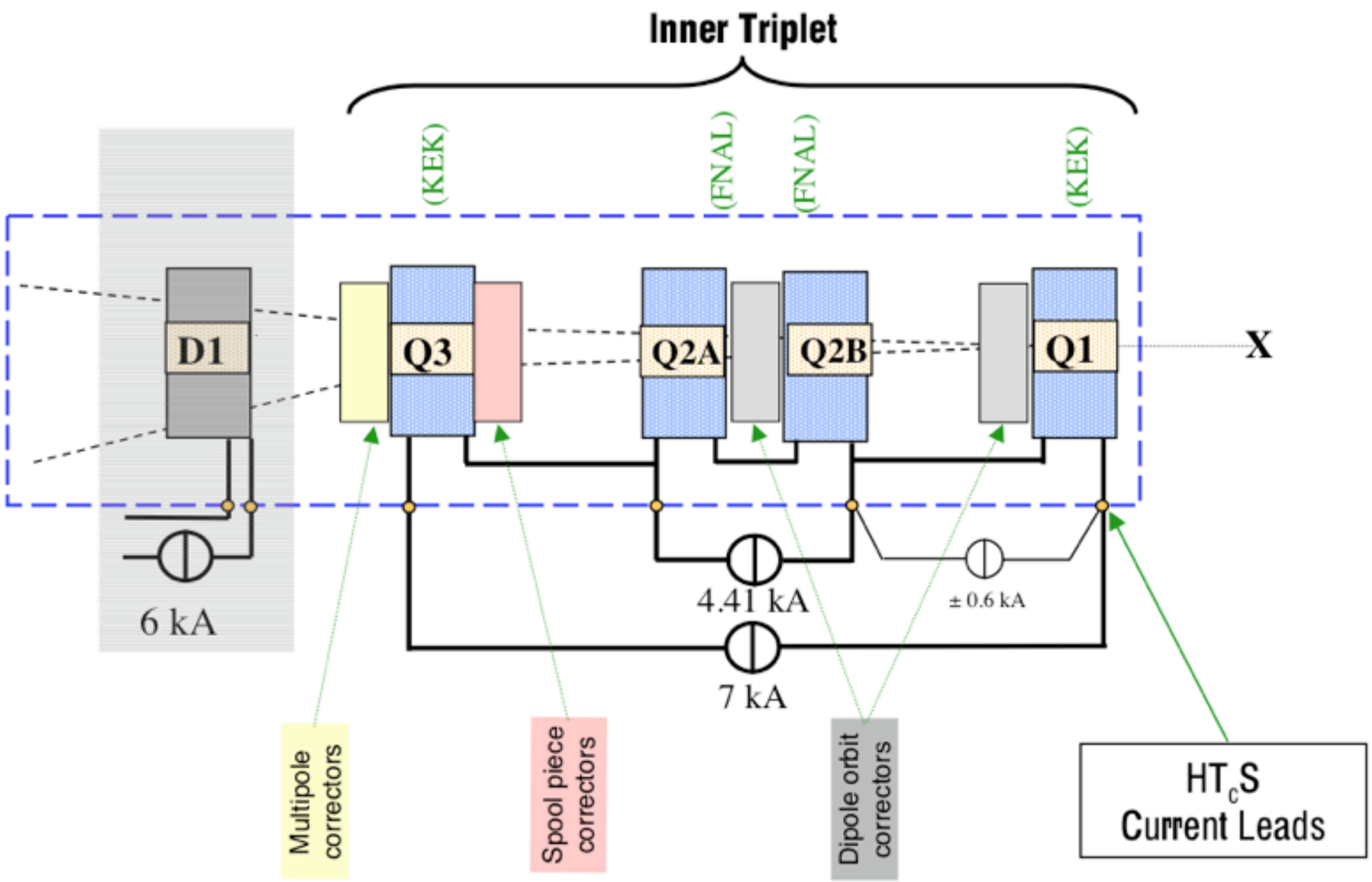

SC Busbars

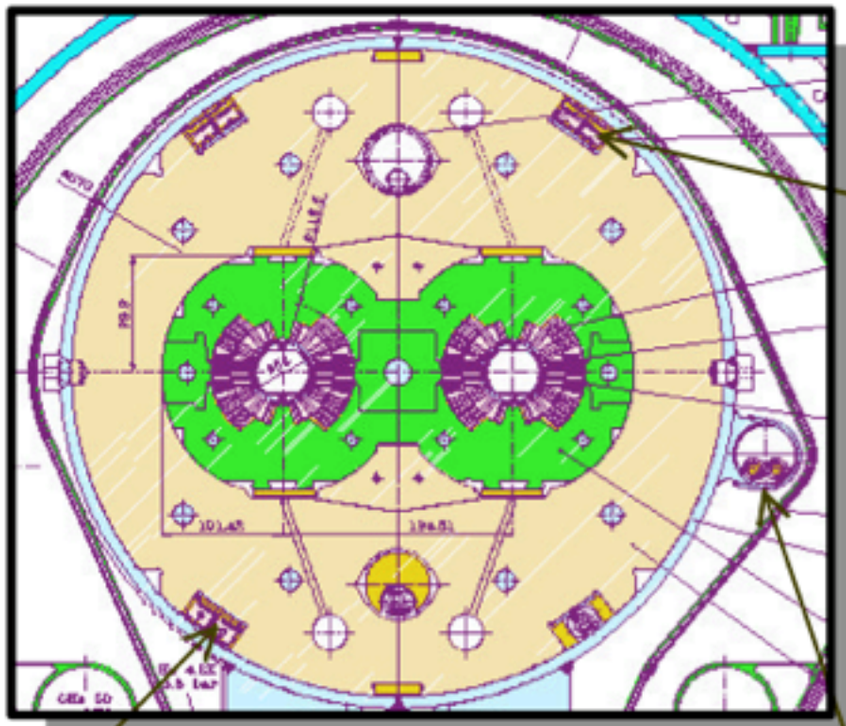

Spool piece correctors, 600 A
Monolithic 3 mm²
Cu/SC 9:1

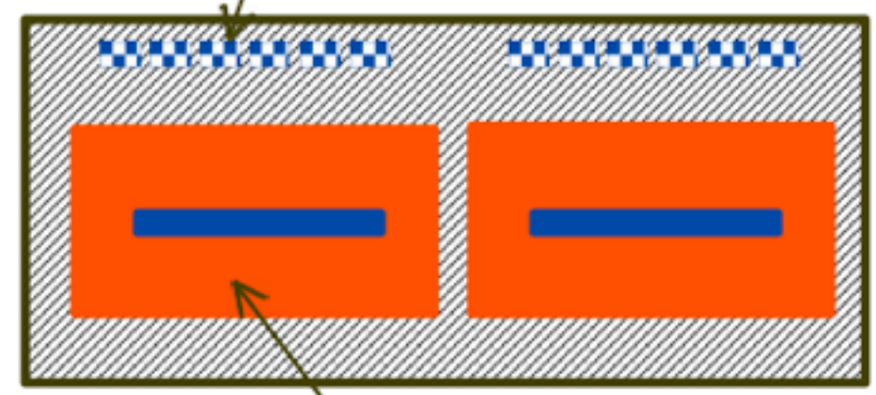

Main Quadrupole, 13 kA
7.4 mm² of NbTi
180 mm² of Cu

Main Dipole, 13 kA
7.4 mm² of NbTi
300 mm² of Cu

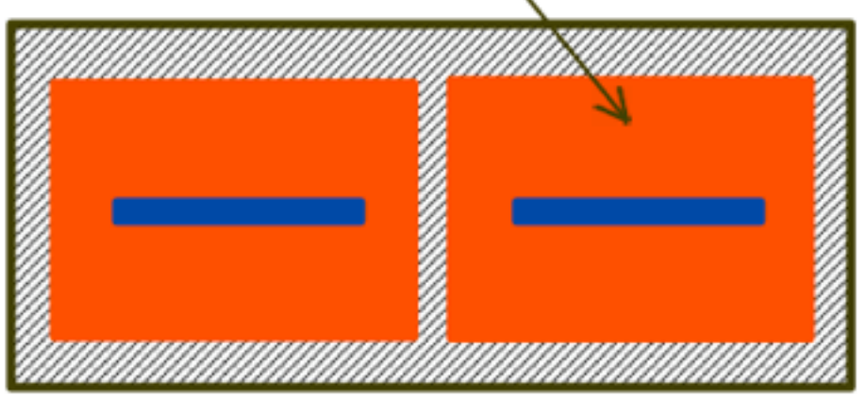

Bypass tube and cable(s)

Half Cell 53m

Routing of Auxiliary bus-bars

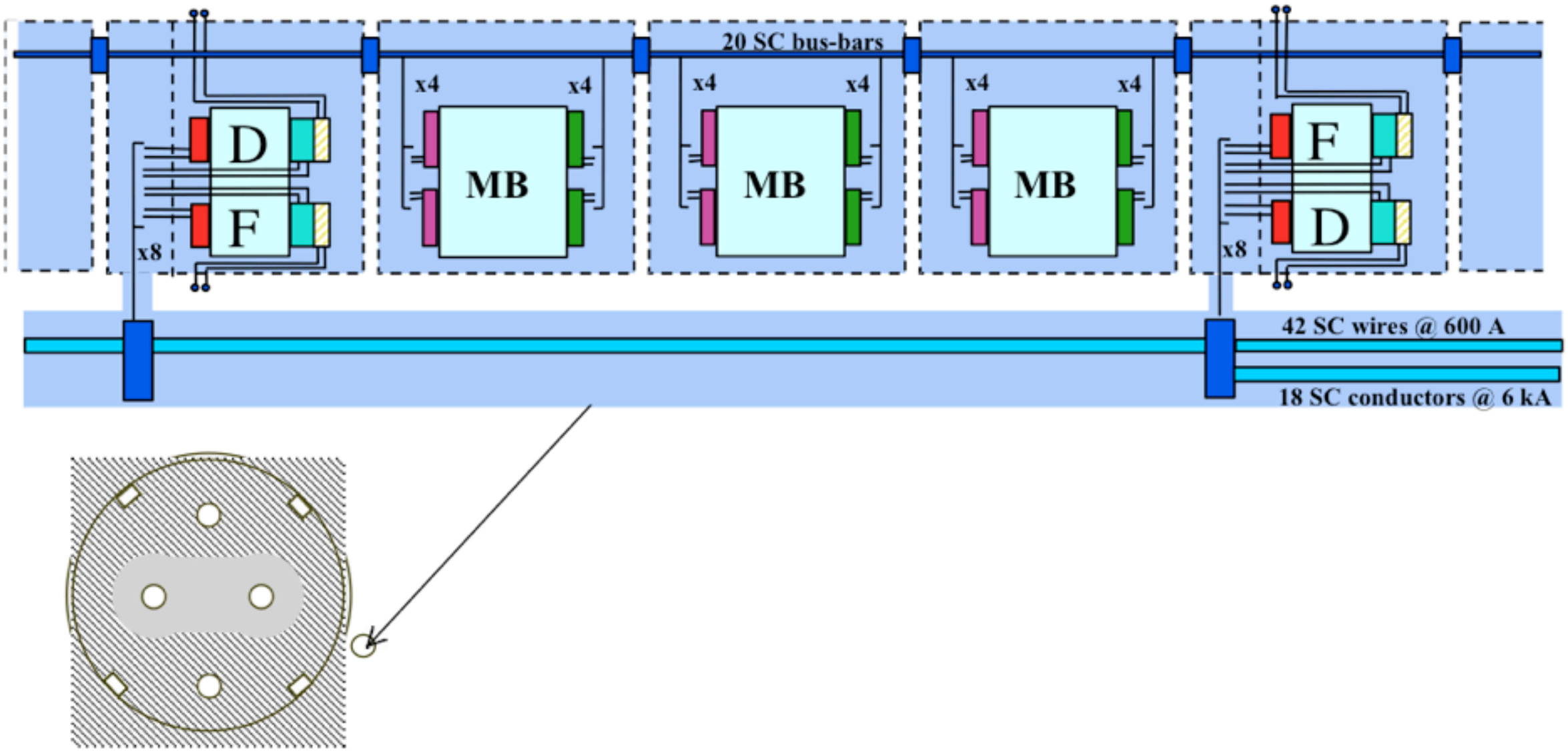

Main Arc Tunnel

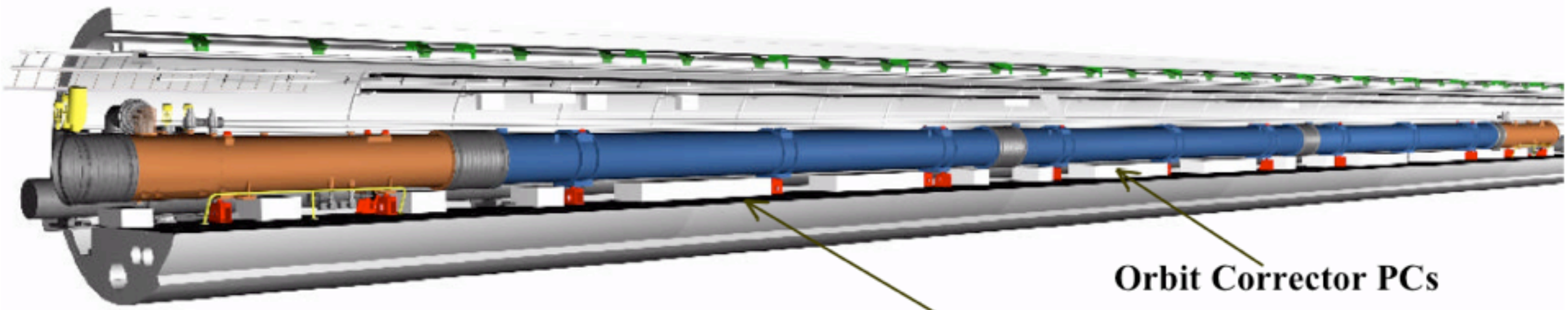

Y. Muttoni EST/ESI
F. Soriano

Radiation Dose

- 1 Gy/year under dipoles
- 12 Gy/year at interconnects

No Access during "Beam-On"

Access restricted without beam

- Low power
- Operational Dosimeter
- Survival kit!!

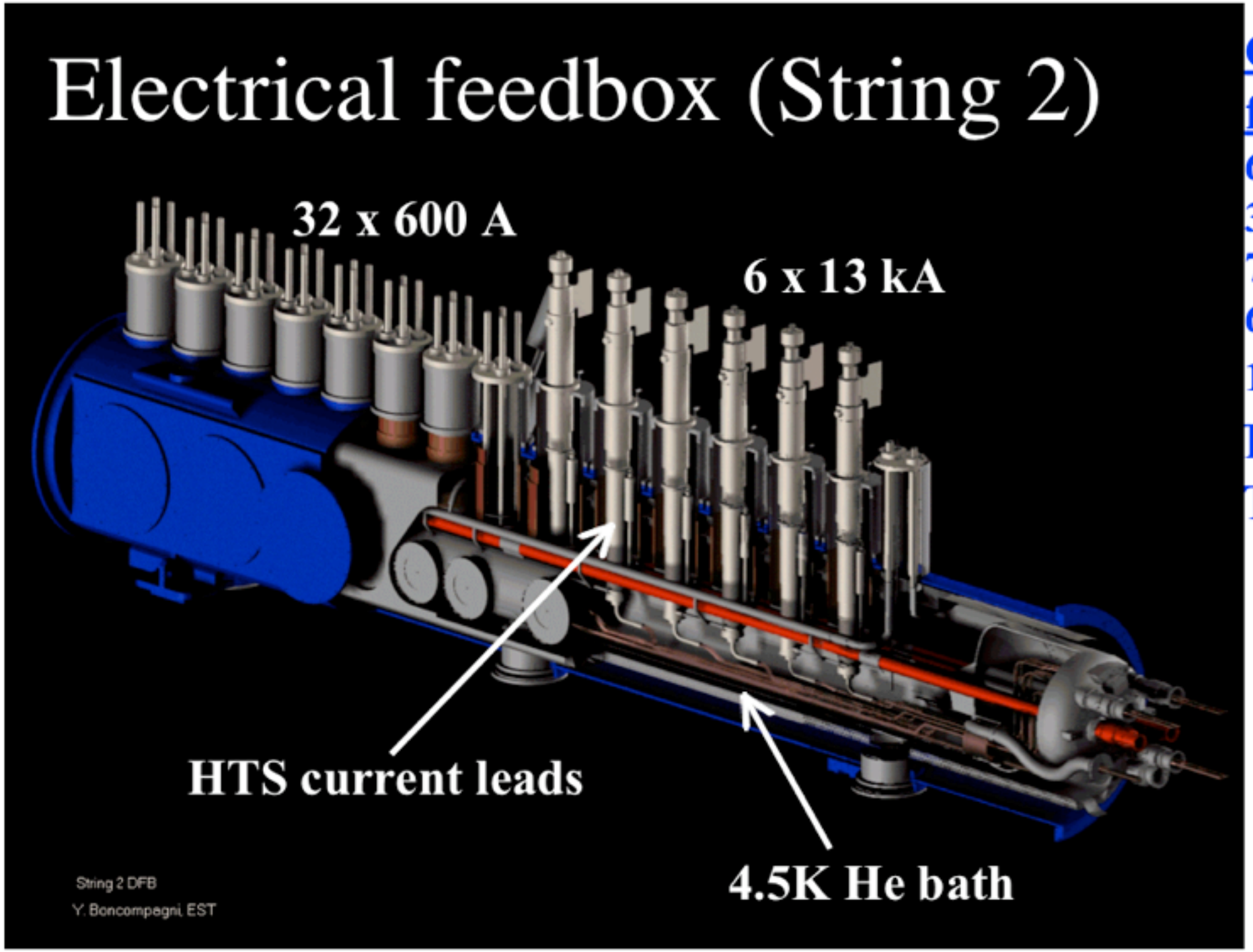

Current Leads for LHC project

64 x 13 kA
310 x 6 kA
798 x 600 A
616 x 120 A
1504 x 60 A

Local resistive leads

Tot. Qty = 3292
Tot. I.= 3.0 MA

NB: Includes Inner Triplet supplied by US

UA23 (Ex-LEP Klystron gallery)
Now used to house the majority of machine equipment such as power converters, magnet protection, injection,
extraction, RF generators, etc.

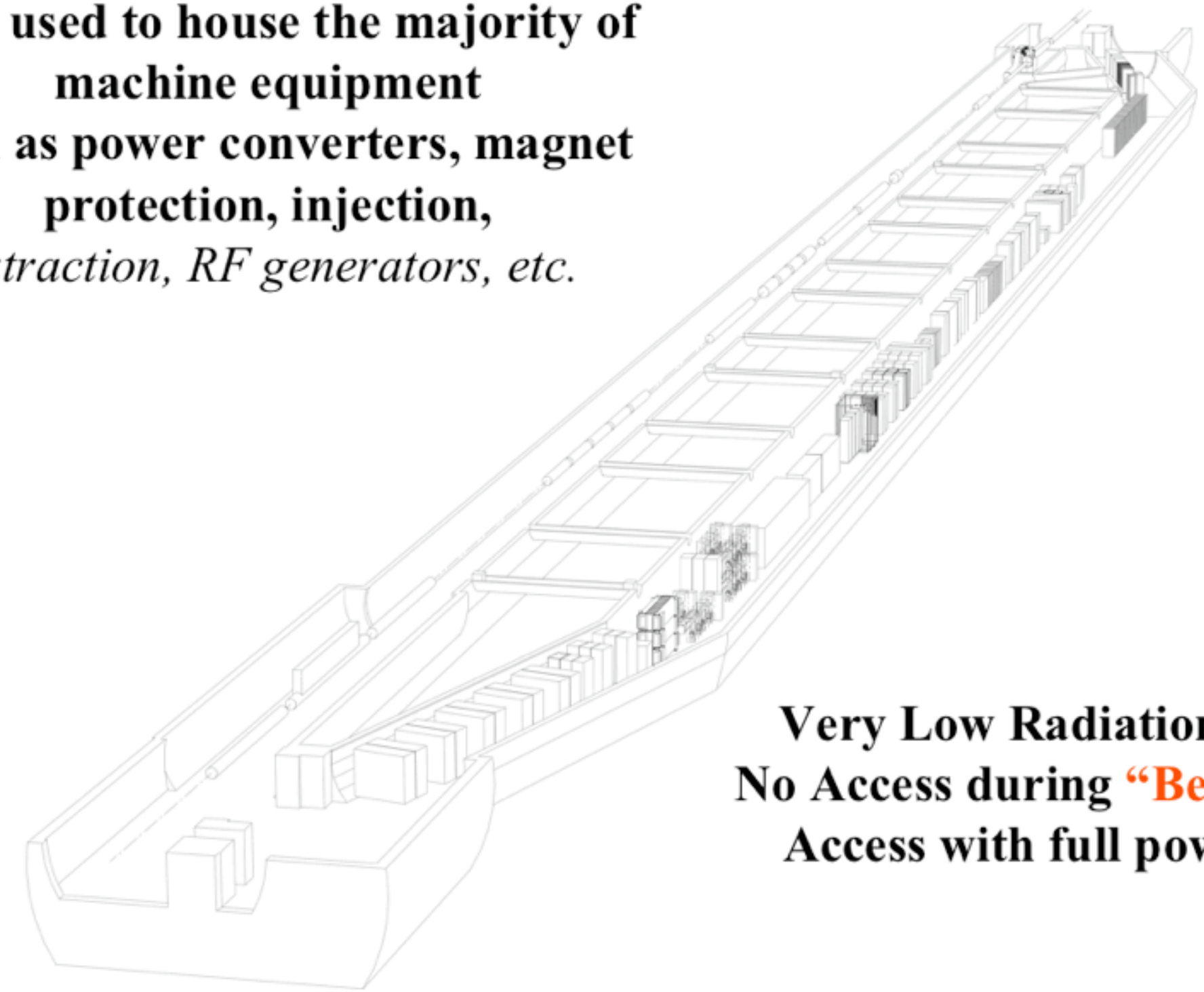

Very Low Radiation Dose
No Access during "Beam-On"
Access with full power on

New Enlargement for Machine Power Converters around ATLAS and CMS

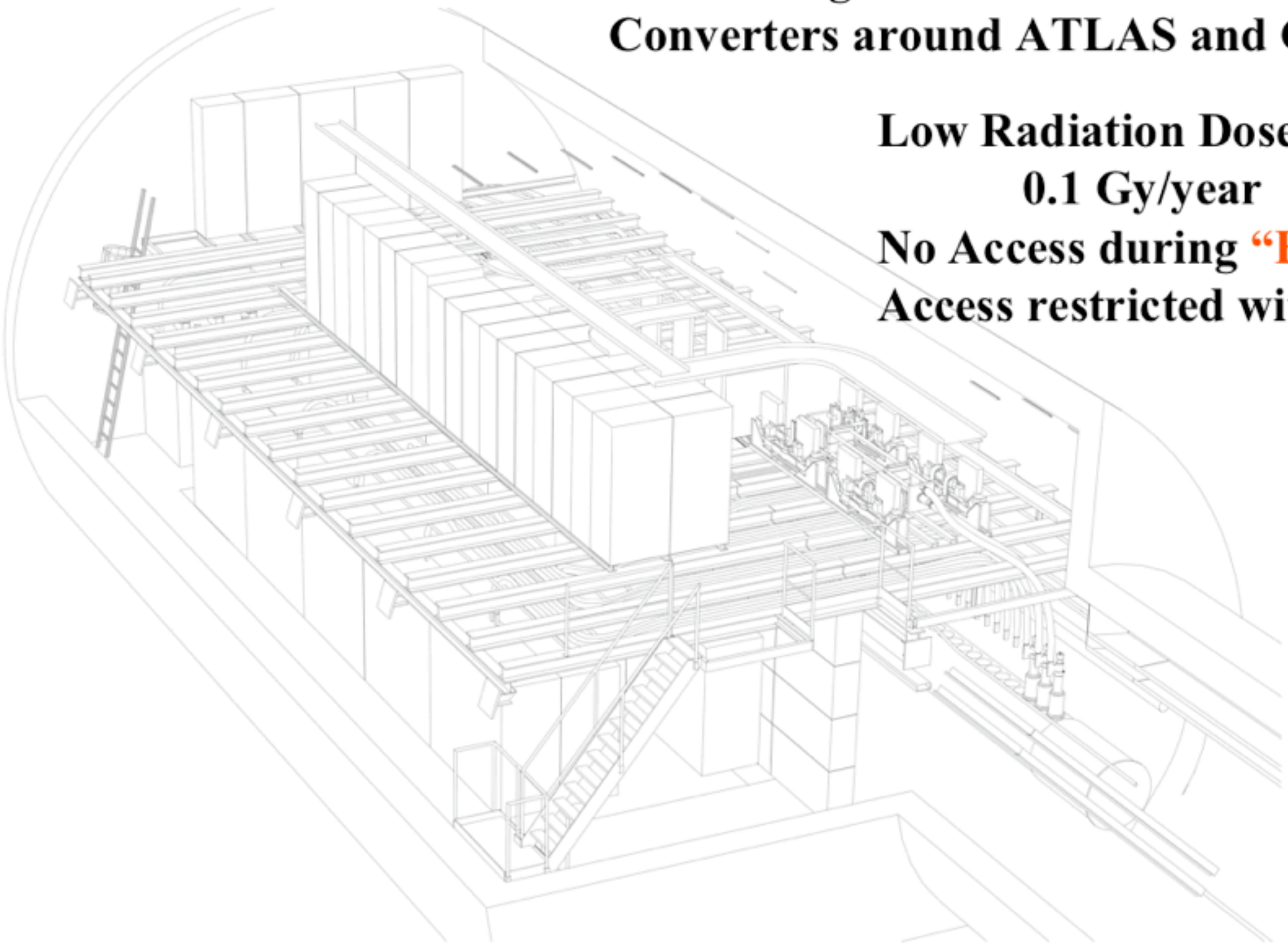

Low Radiation Dose,
0.1 Gy/year
No Access during "Beam-On"
Access restricted without beam

New Enlargement for Machine Power Converters at a cleaning insertion e.g. RR77

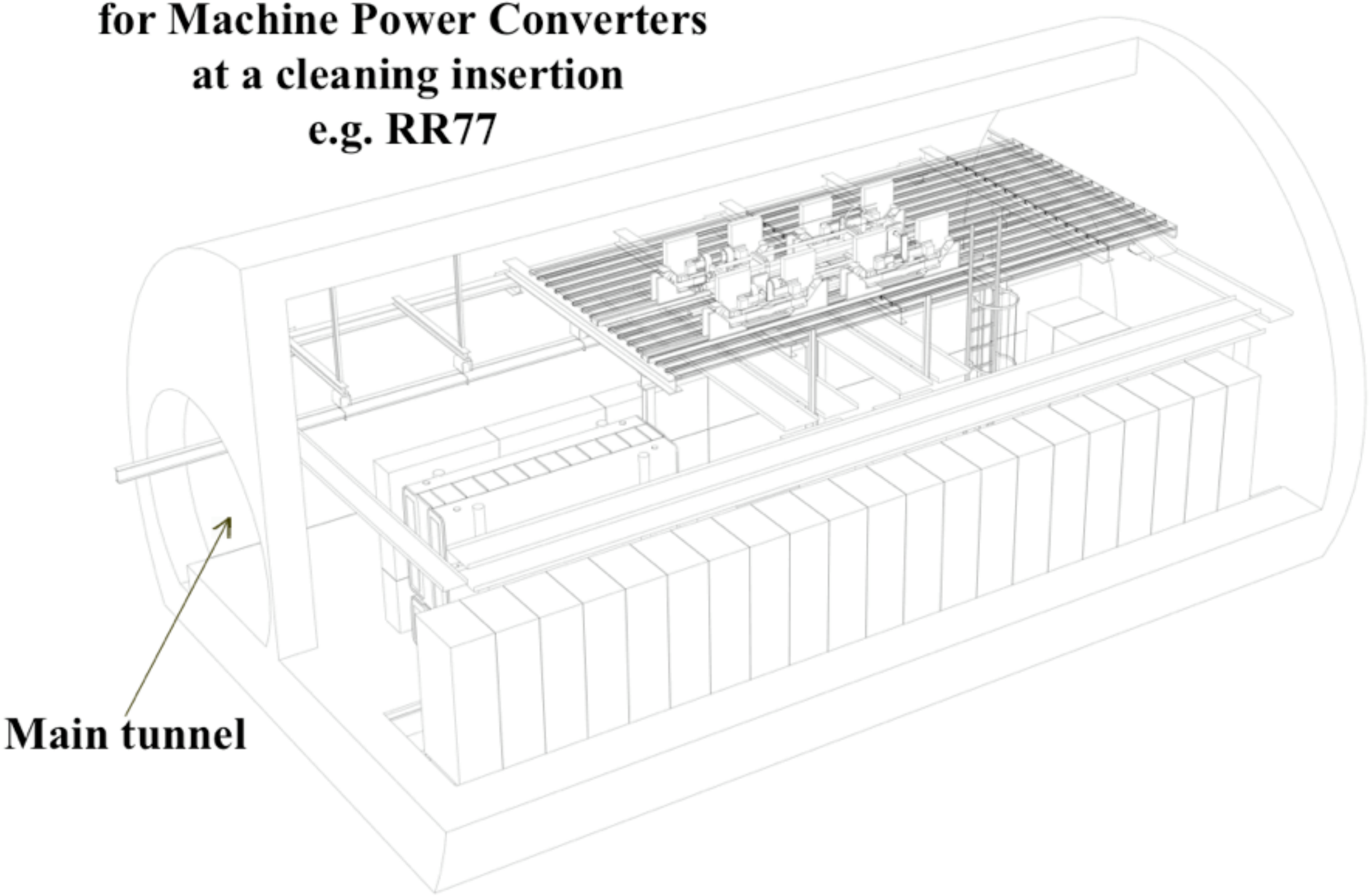

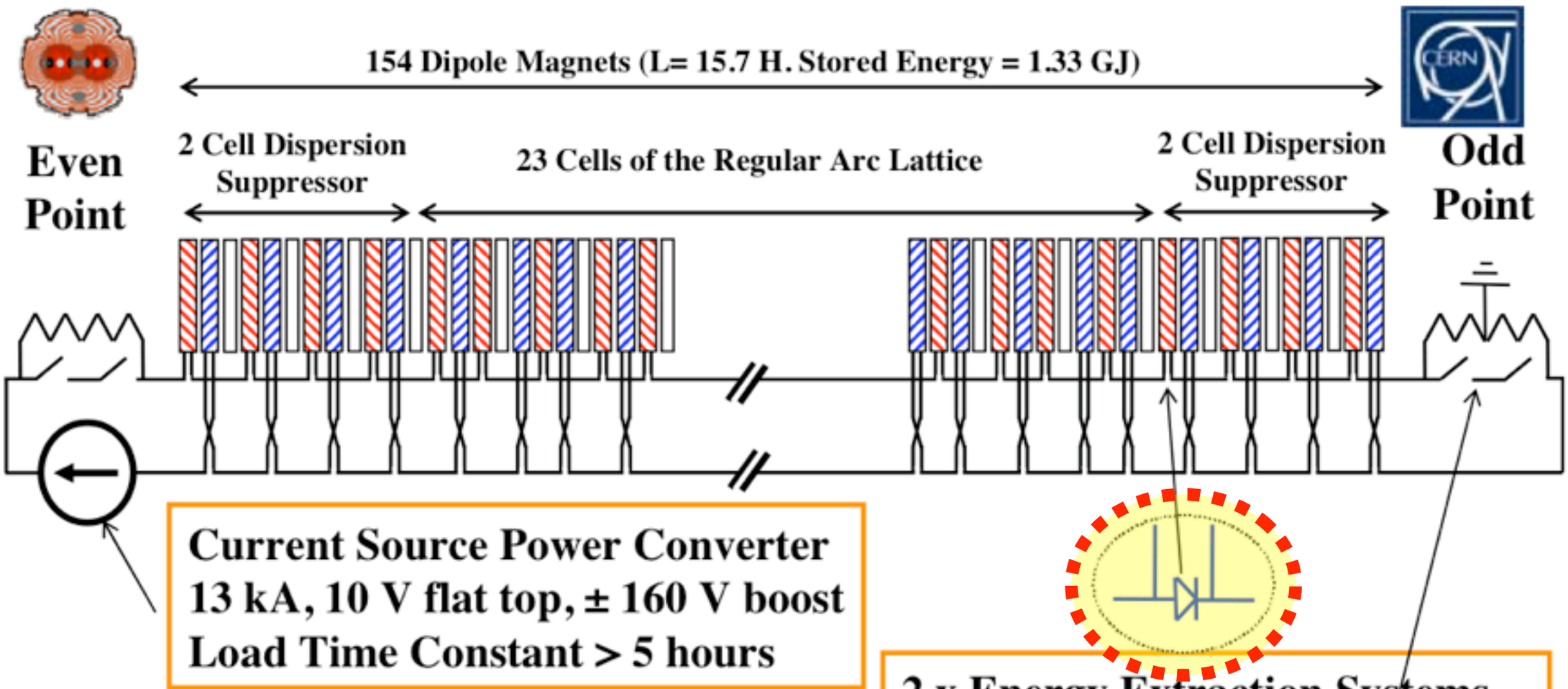

- **The protection is based on:**
  - Individual by-pass
  - Forced quenching by quench heaters
  - Discharge of the remaining s.c. magnets by means of external dump resistors (opening breakers)

The main magnets in the lattice (MB, MQ)

Dipole Diode Stack **Quadropole Diode Stack**

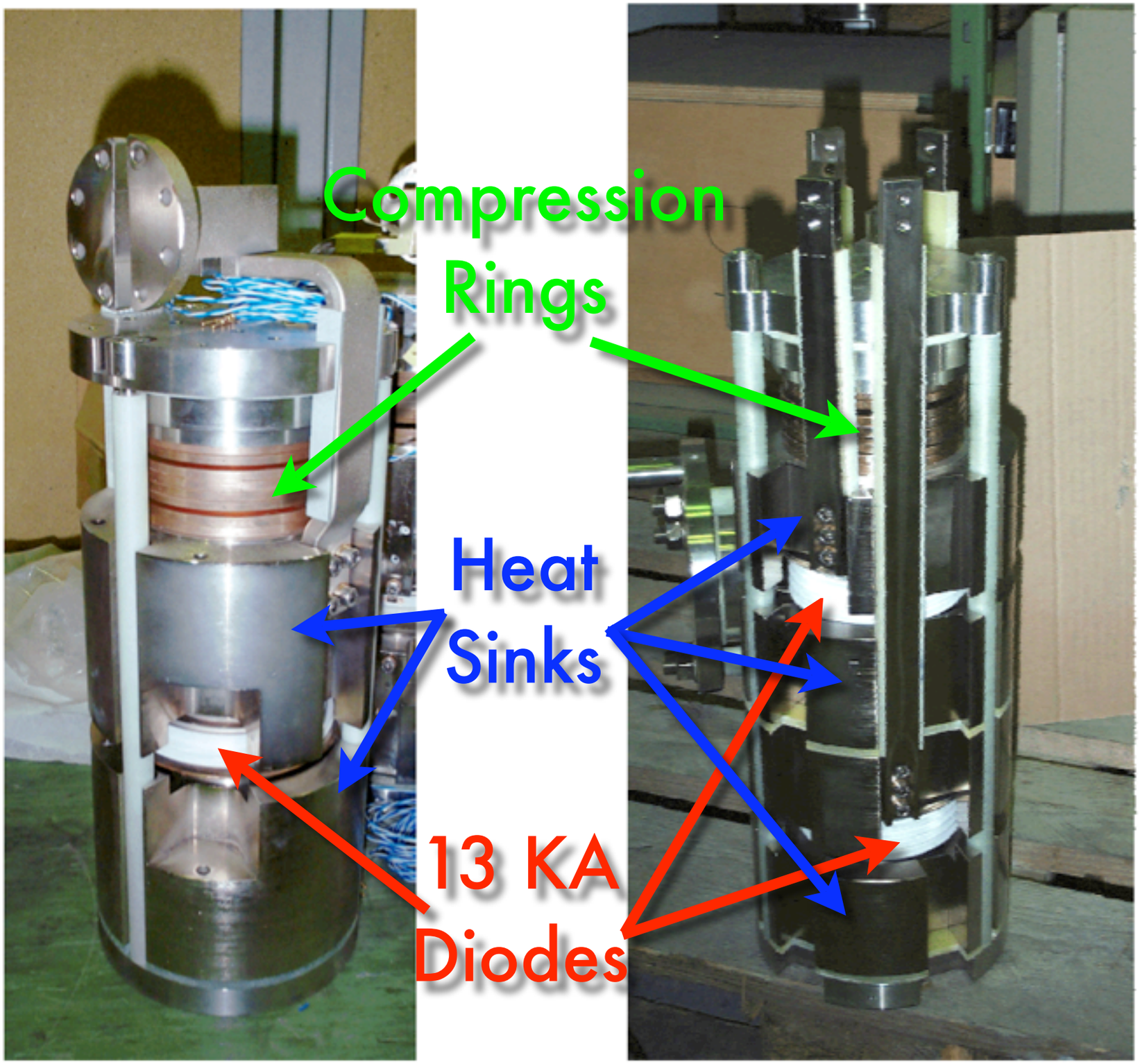

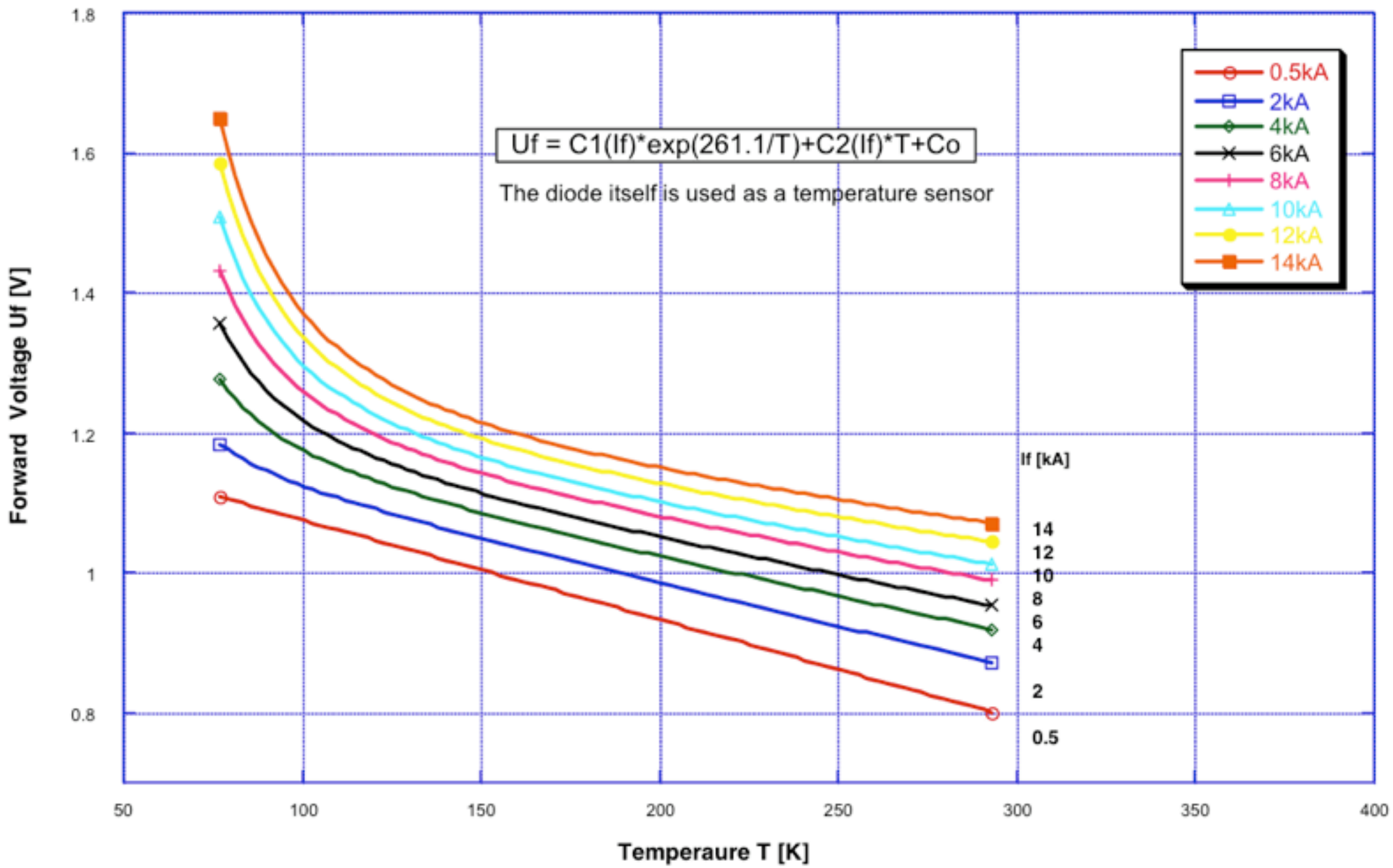

Forward voltage versus temperature with forward current If as parameter derived from If-Uf at 77K and 300K for a series diode

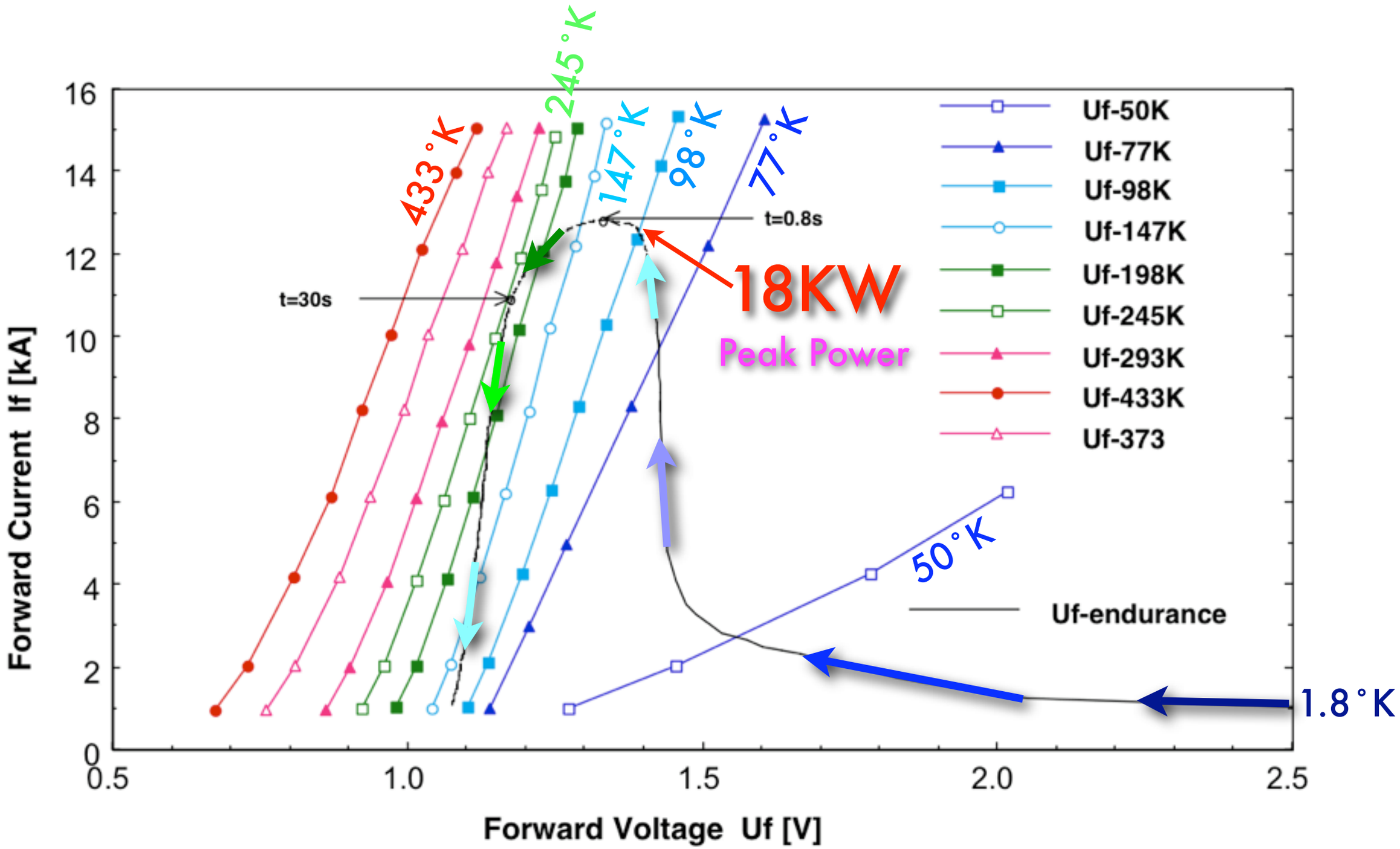

Measured If-Uf-characteristics of an EUPEC diffusion diode at different temperatures and monitored Uf and If during endurance testing

Radiation Damage

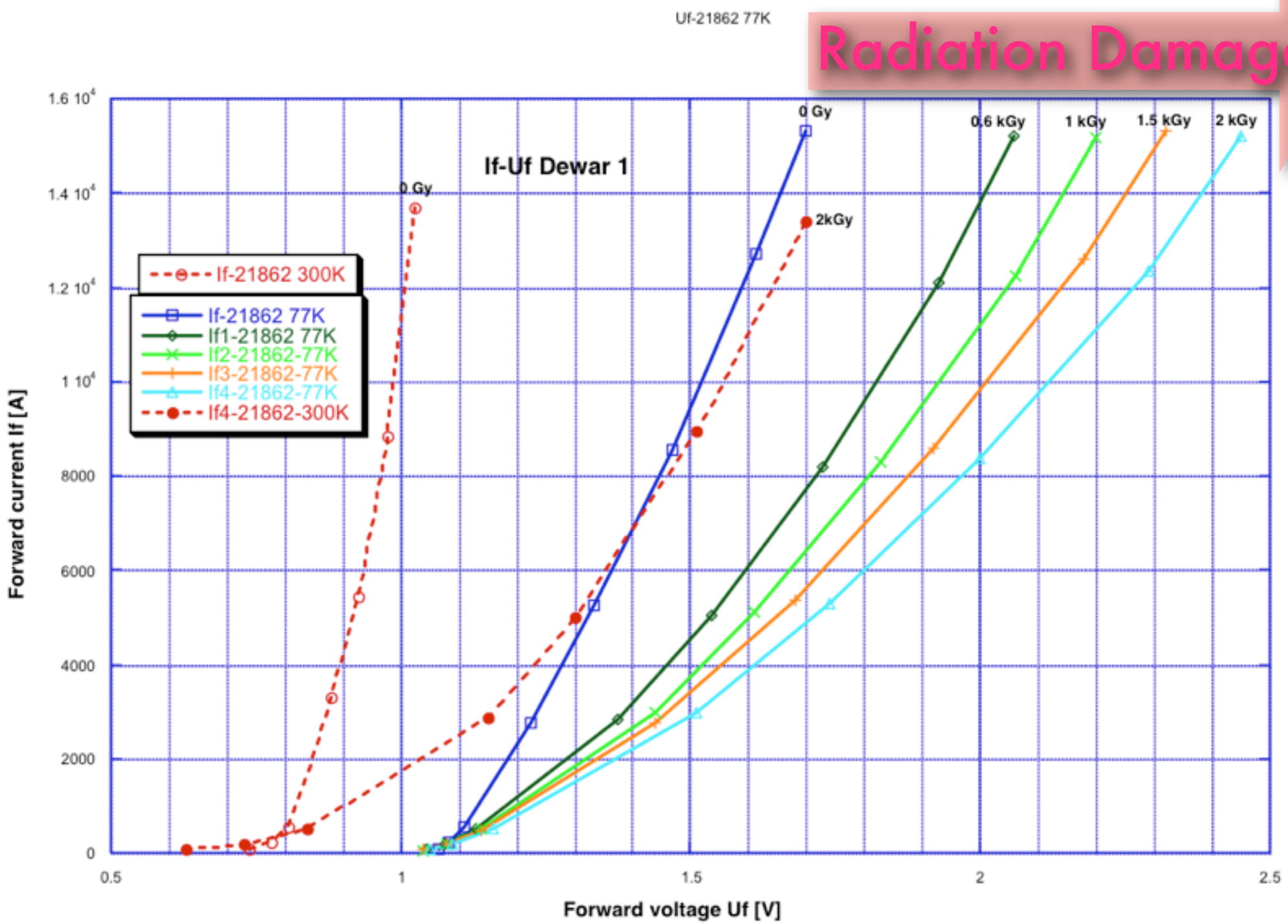

Forward current-voltage characteristics of an irradiated diode after different irradiation steps

Minimum current at which heaters are needed in the MB...

From simulations...

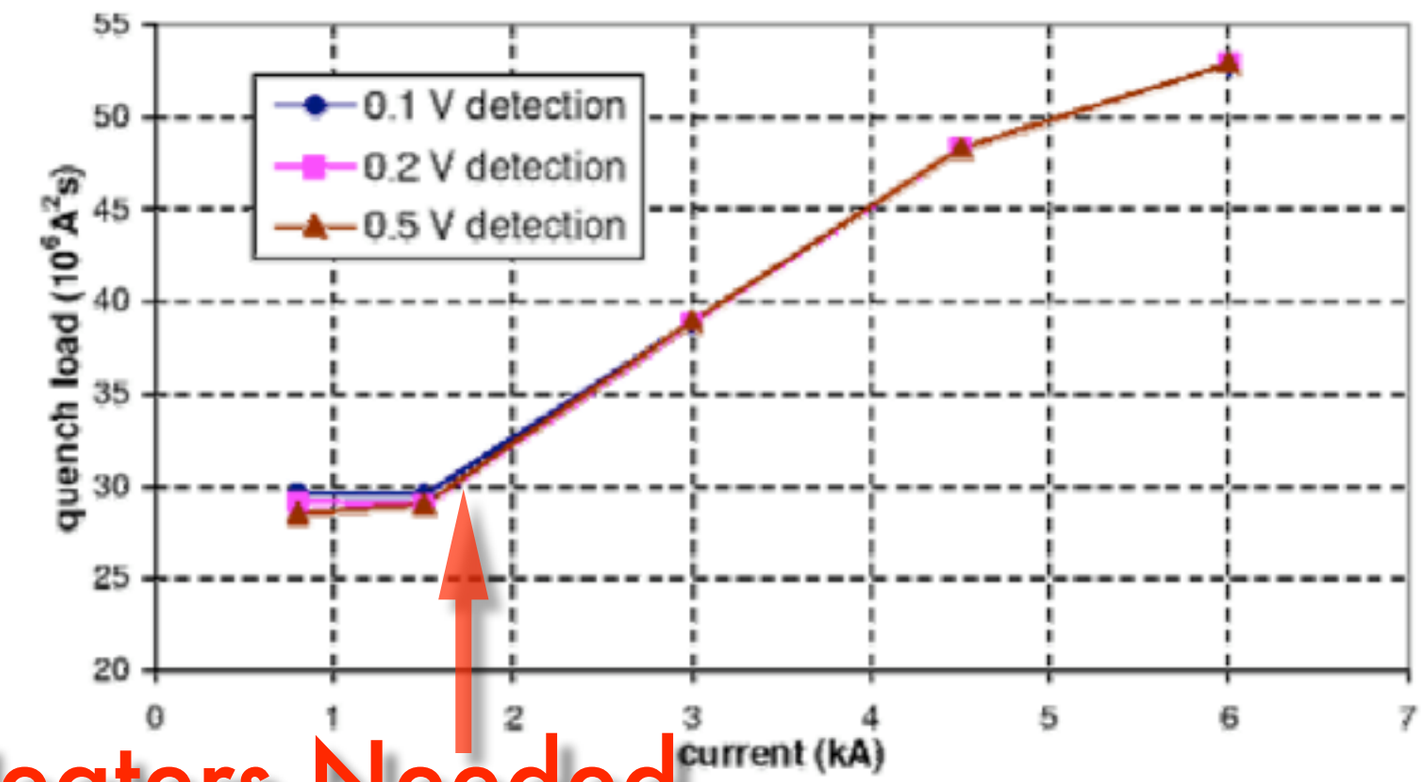

Heaters Needed

... confirmed with tests on 15 metre long dipoles (ref. A. Siemko, LHC/MTA)

Functionality (2/3)

- **Extensive tests & simulations**
  - **have shown that the whole coil becomes resistive in <50ms**
  - **MB example**

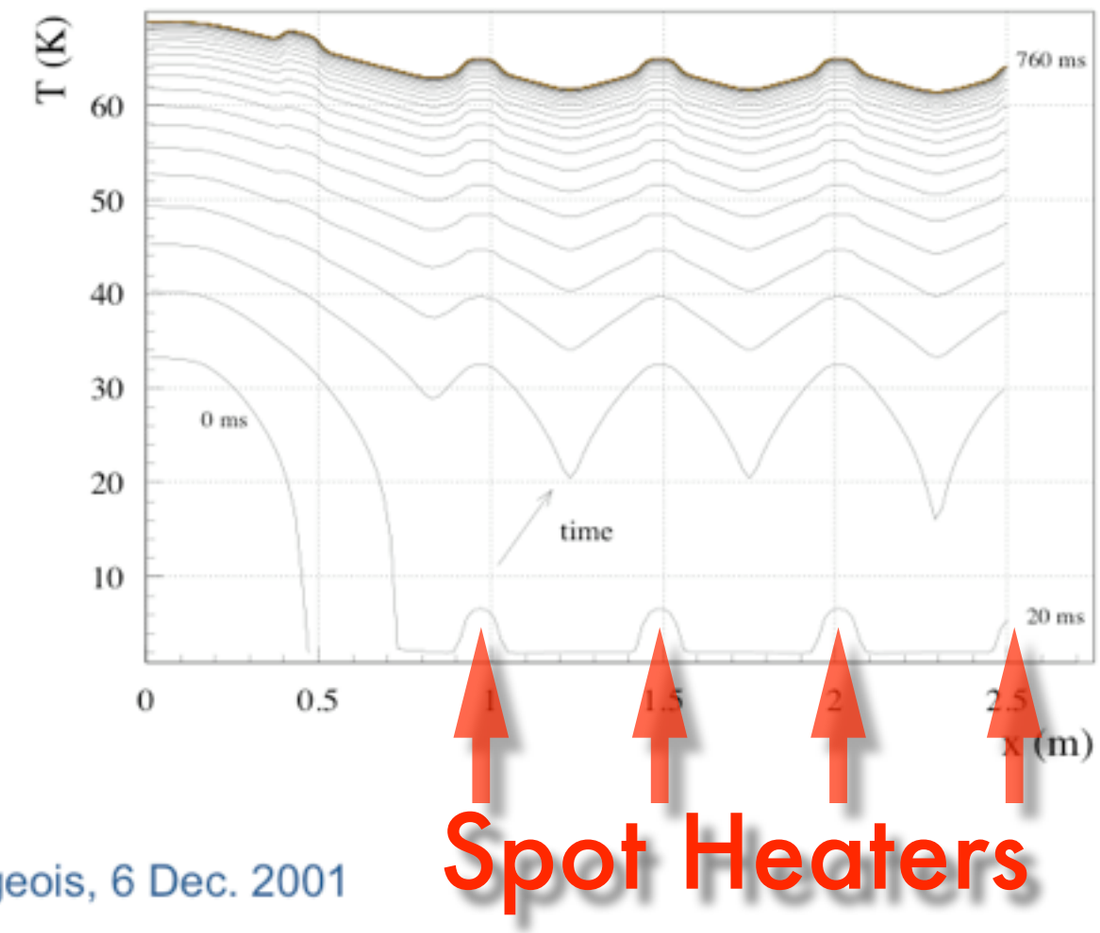

Efficiency of the Quench Heaters

Miits vs B @ Quench

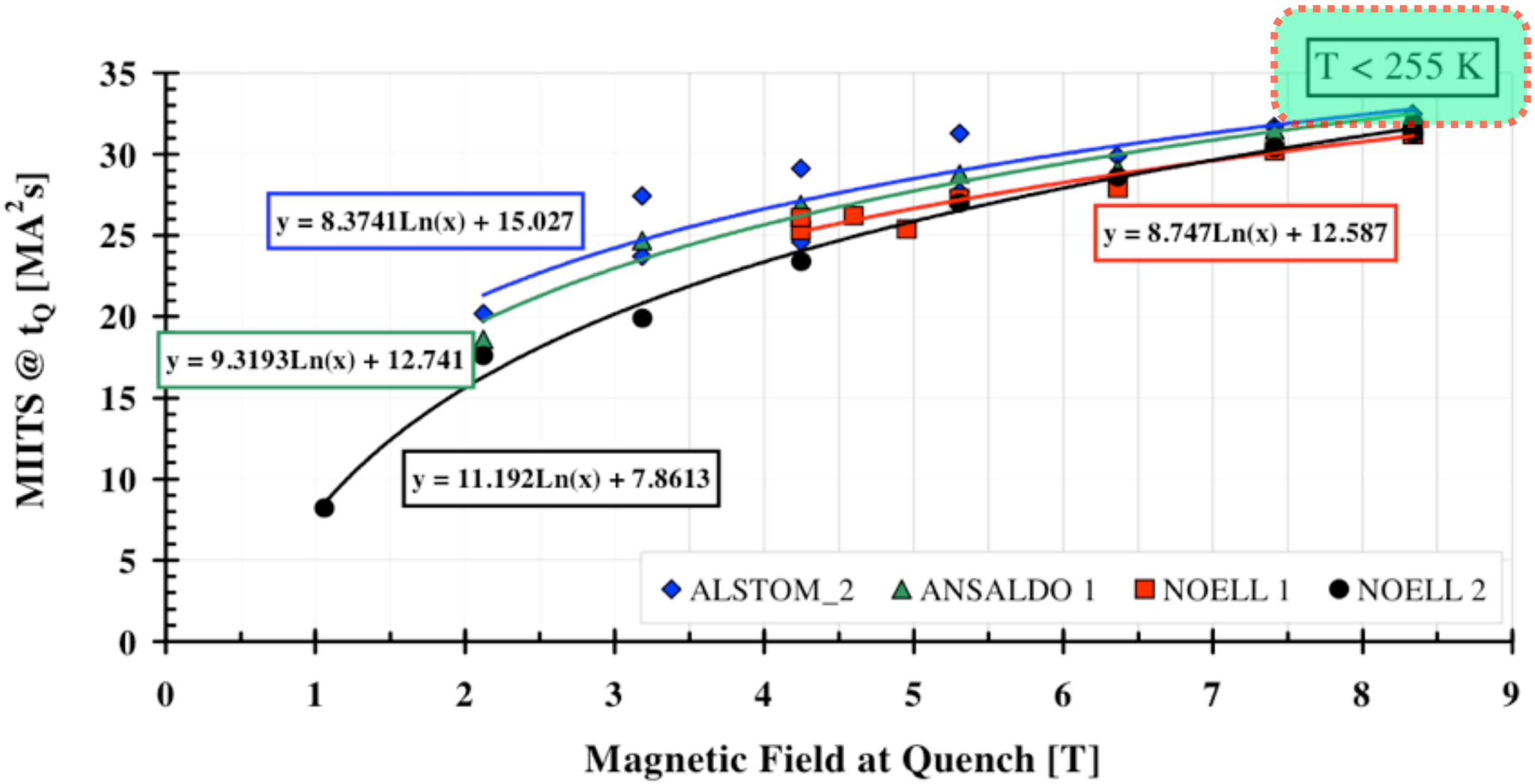

Courtesy Pugnat/Siemko, LHC/MTA

Efficiency of the Quench Heaters

Quench Heaters delay

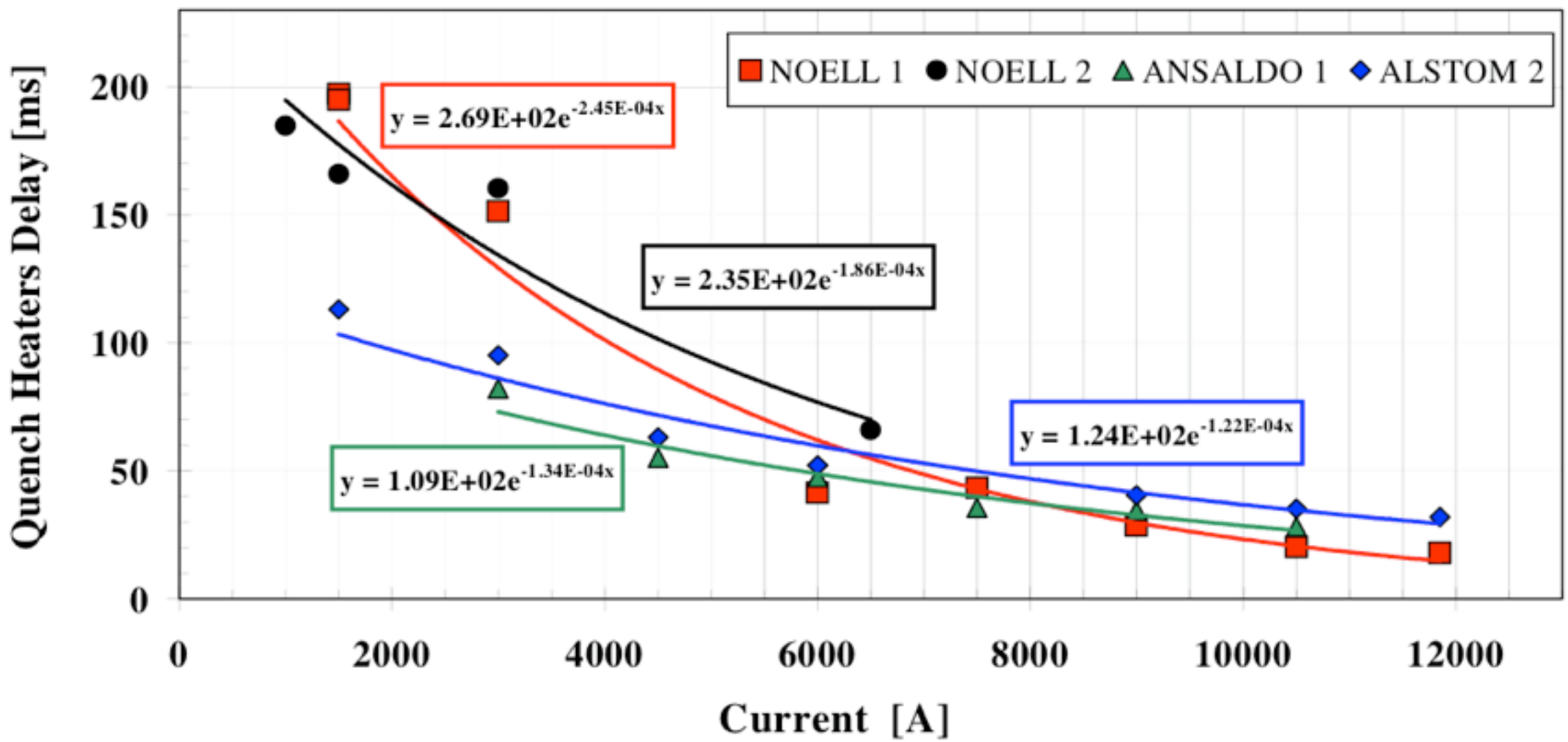

Courtesy Pugnat/Siemko, LHC/MTA

Block diagram of the HDS

around 6200 units required all around the LHC

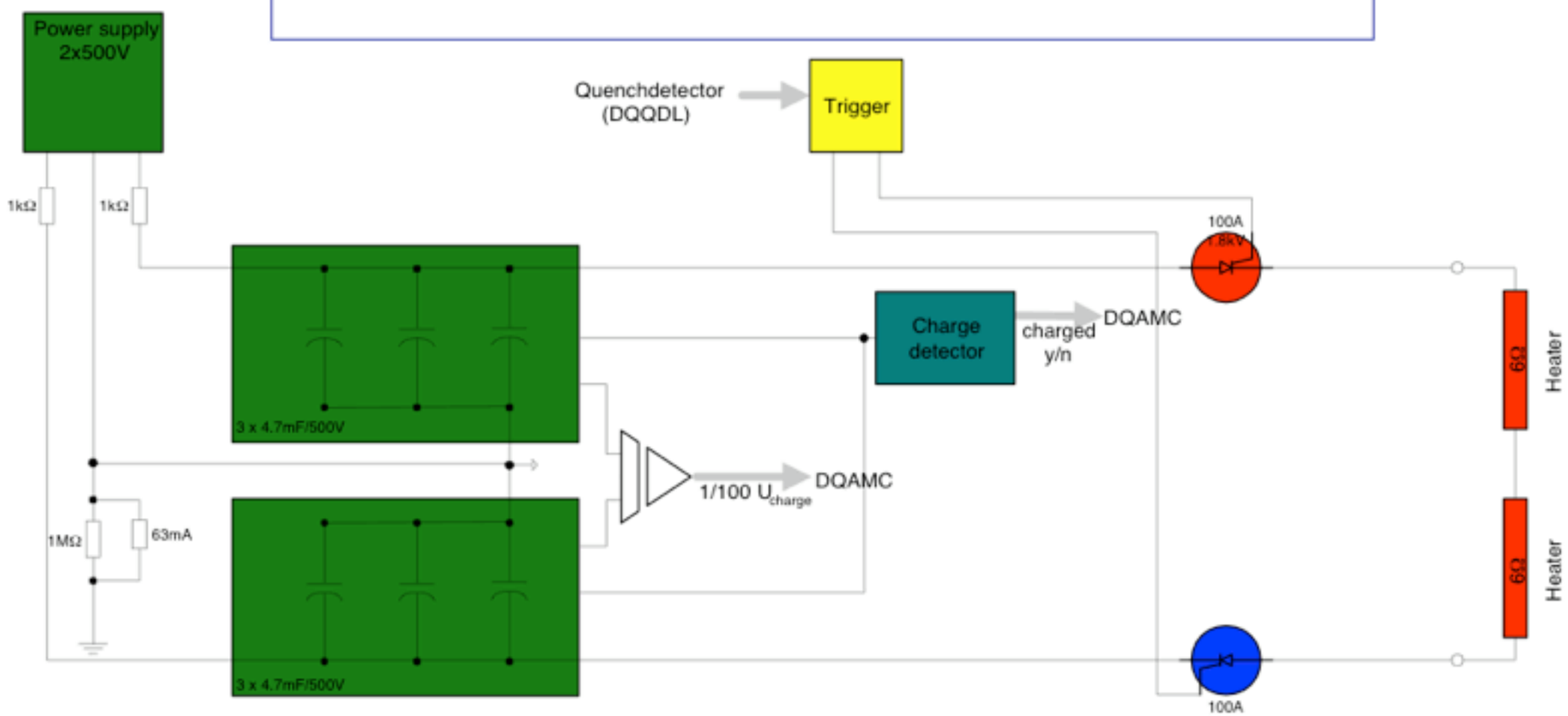

Felix_QPS_intro.pdf (66 pages)

Heaters in dipoles MB

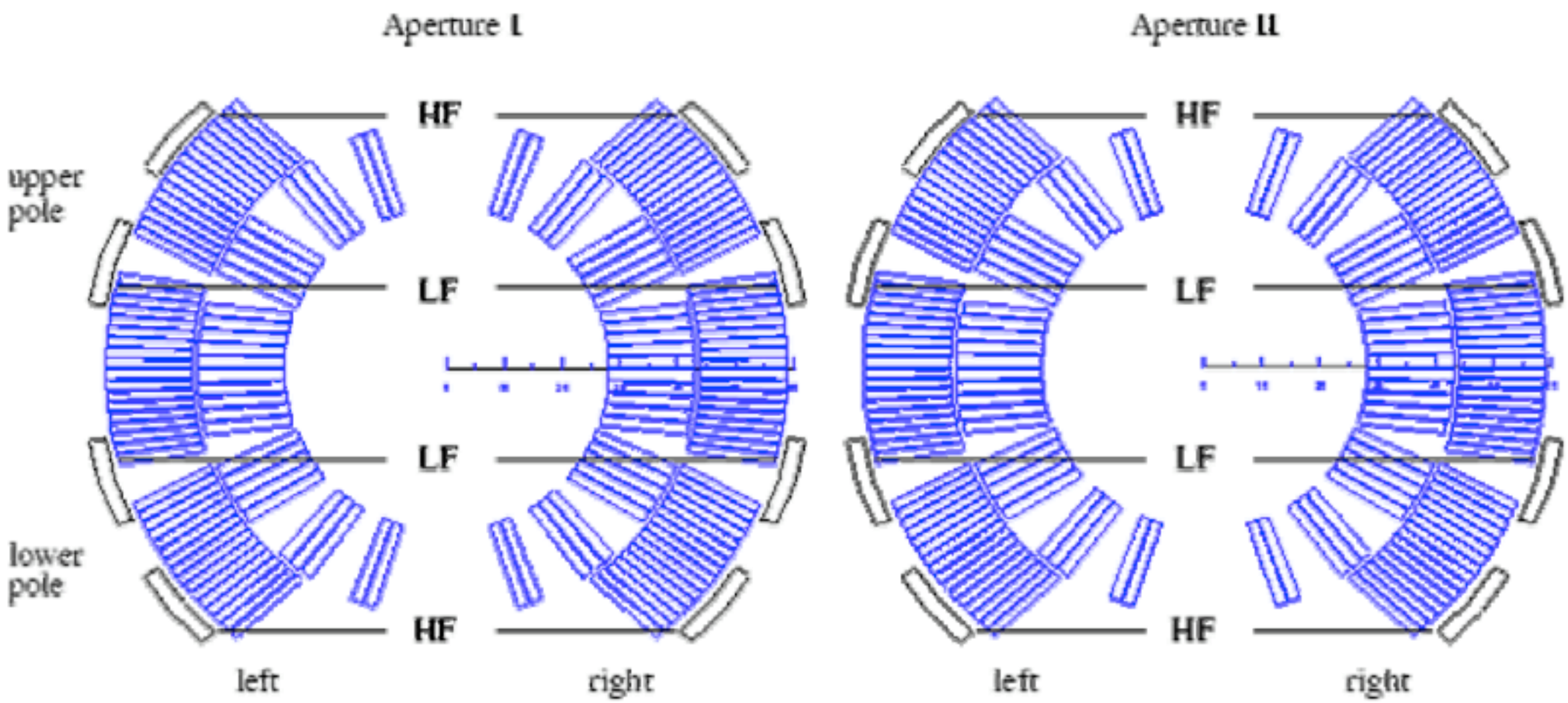

Redundancy of the installed quench heaters in MB magnets (measured values)

Danger! 2 Heater Needed

Due to effects of de-training appearing in LHC dipoles, the limit is set to a minimum of 2 HDS (2 double length heaters) per dipole

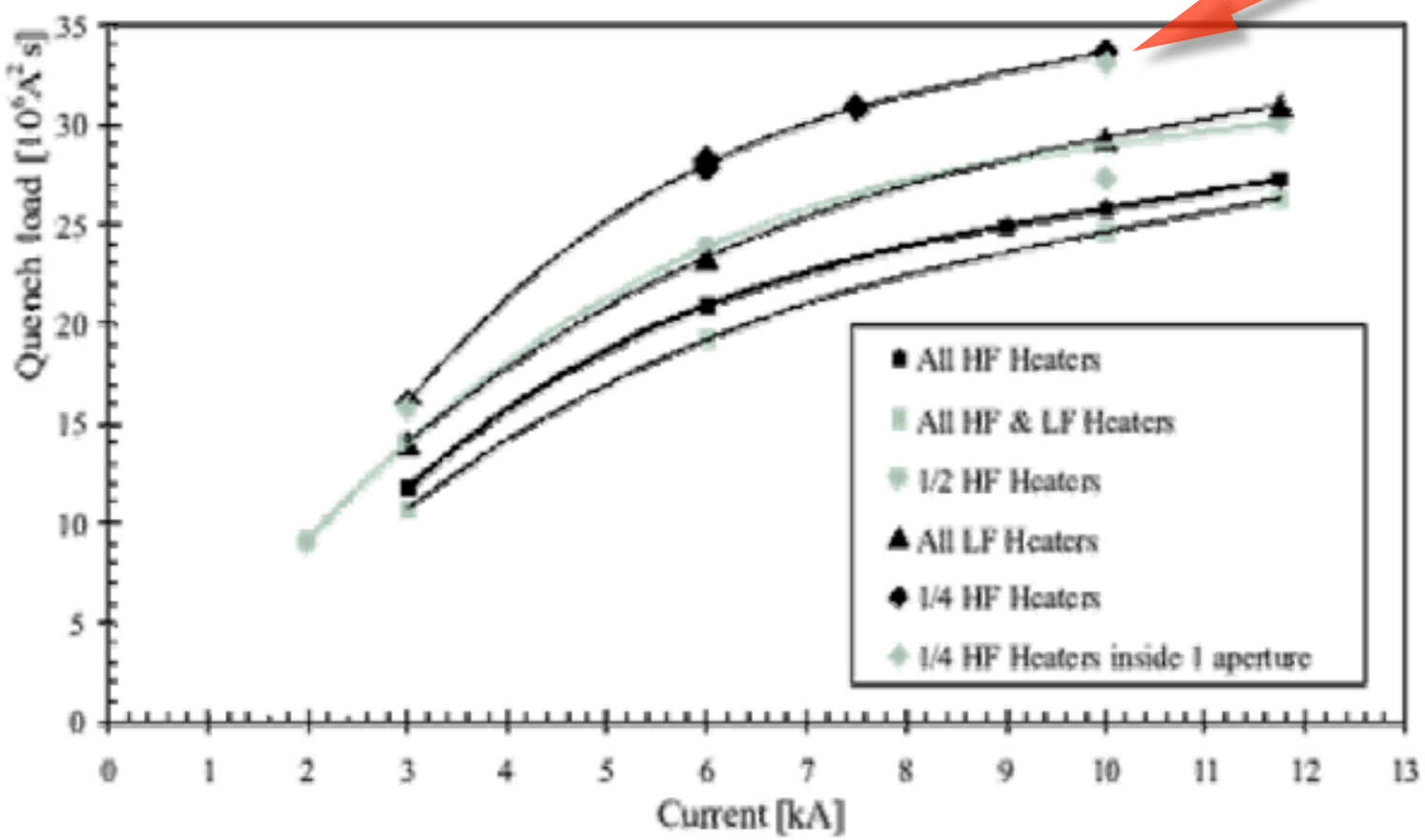

Felix_QPS_intro.pdf (66 pages)

Heaters in quadrupoles
MQ

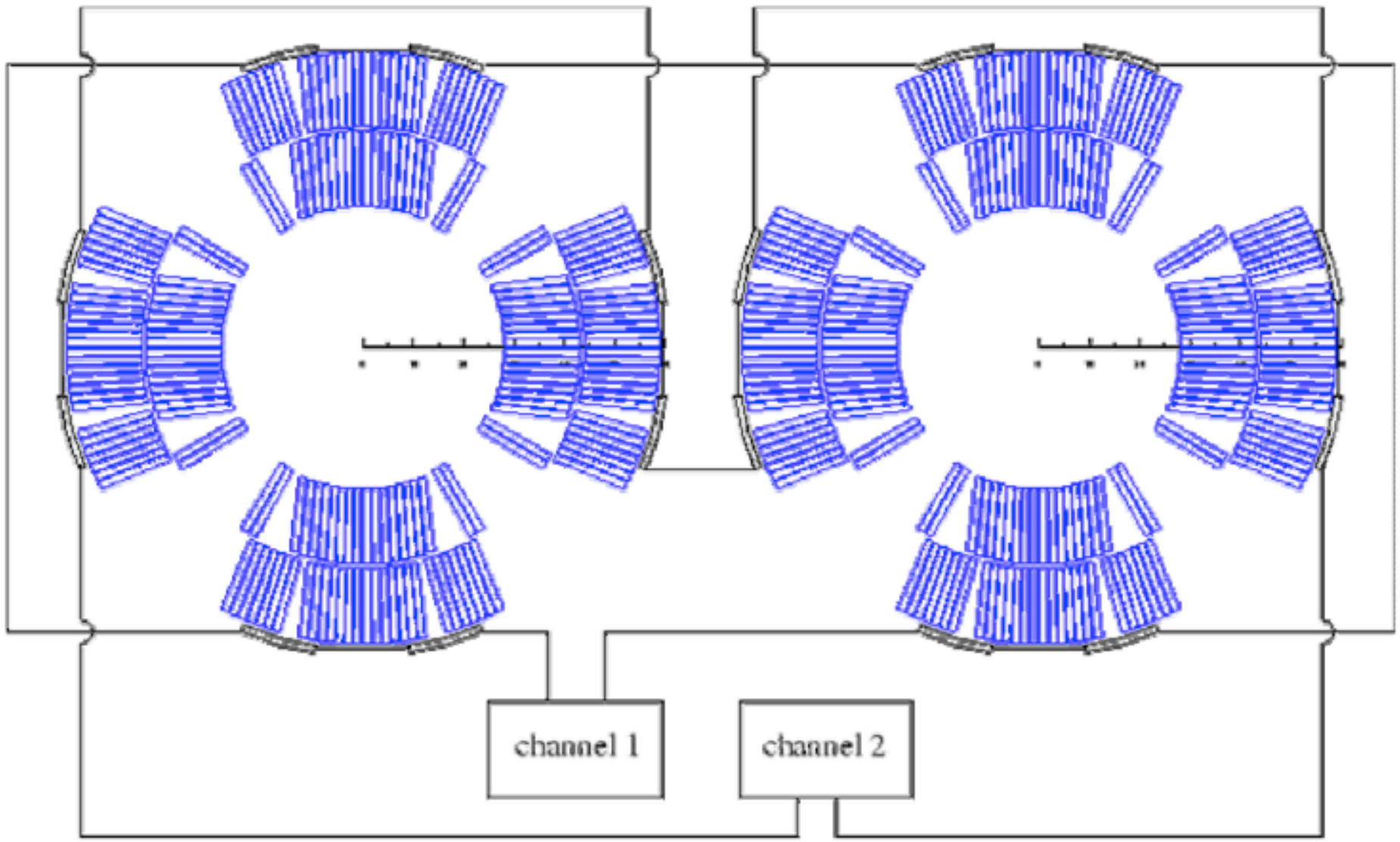

Redundancy measurements in a MQ prototype

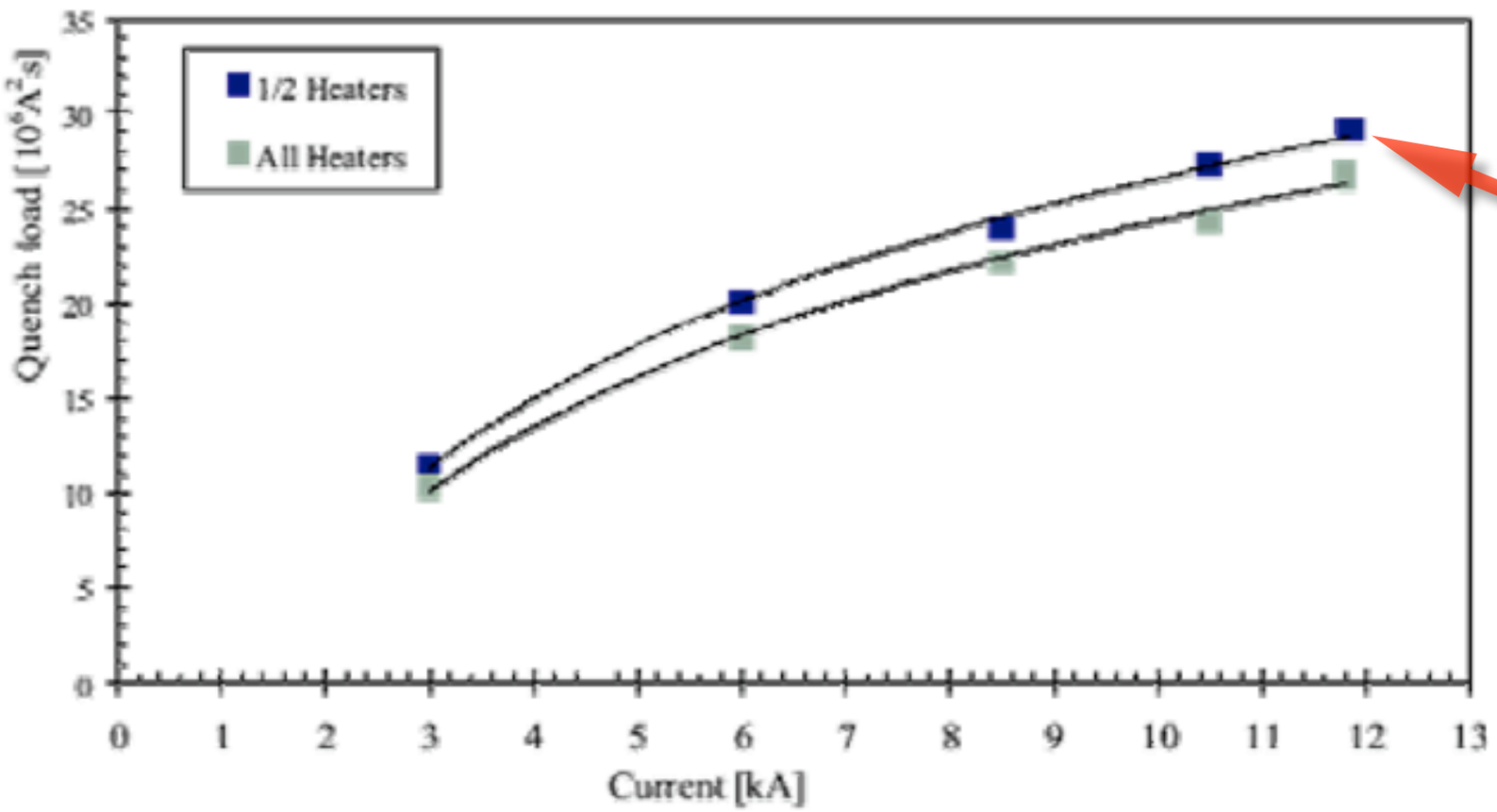

Danger! 1 Heater Needed

One HDS can protect the MQ magnets ...

But not none! (for the full current range)

Conclusions.

- **Current choice: Double 1-oo-2 quench detector.**

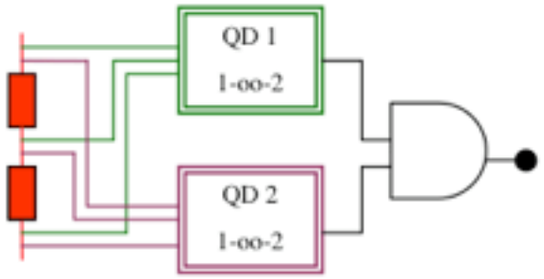

  - Best maintainability options:
    - Quench test with current without discharging HDS.
      - Higher check frequency possible.
      - Checks carried out at working conditions.
    - Failures detected at logical and analog level.
    - Possibility of detecting broken wires.
  - Very good performance.
    - Less than 10 false quenches in the worst modeled scenario.
    - Missed quench probability almost negligible.

A block diagram of the local quench detector (DQQDL)

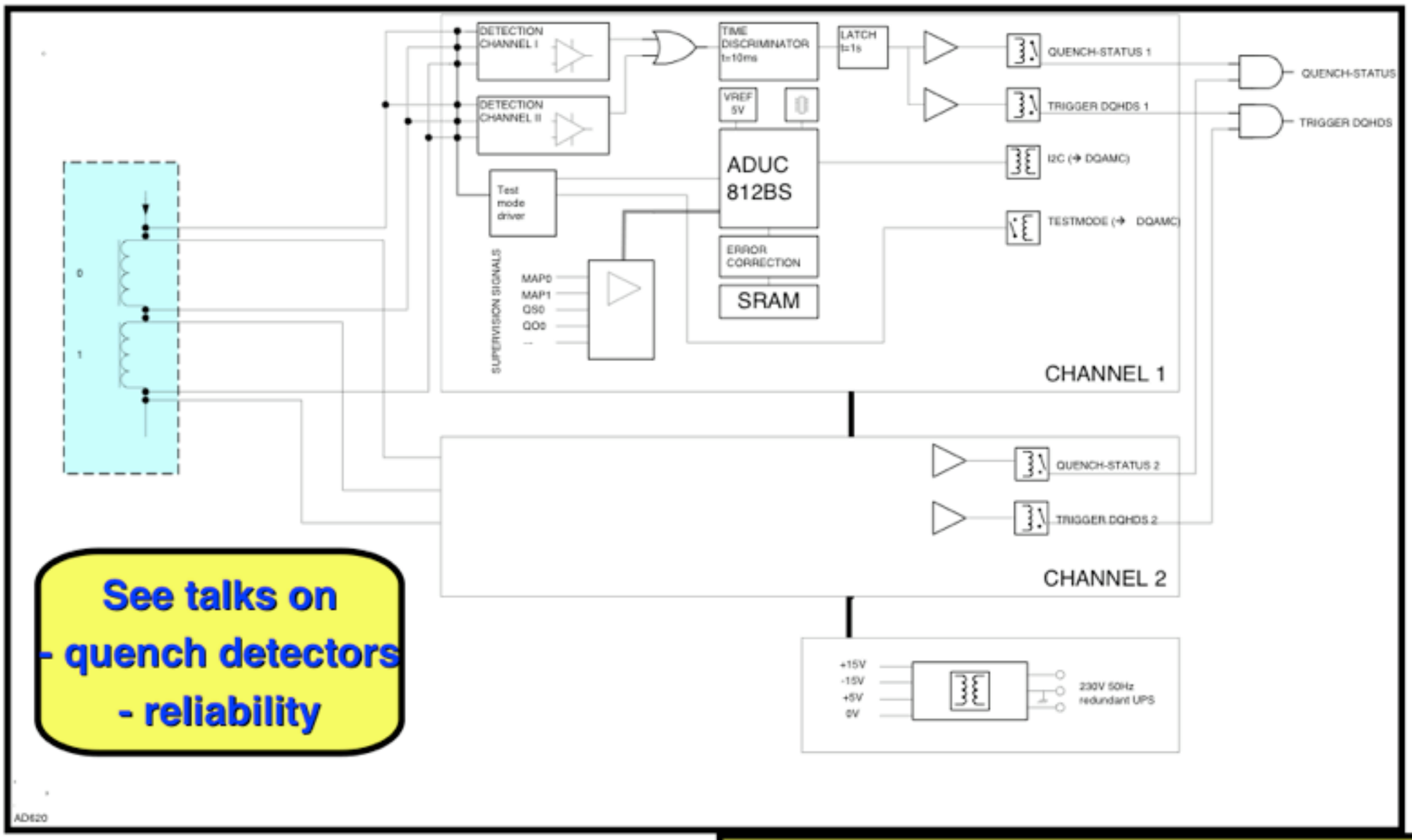

See talks on
- quench detectors
- reliability

Multi-channel evaluation: the trade-off between false triggers and burning magnets

The detection levels (foreseen for LHC)

Detector type	Threshold [mV]	Validation time [ms]
Local for MQ and MB (DQQDL)	100	10
Bus bars main circuits (DQQDB)	1000	1000
Global types (DQQDI,T,G)	100	10
Current leads:		
Resistive part	150	1000
HTS part	3	1000

The quench detection for the bus bars of main magnets

- A local detection for main magnets implies to have a global detection for bus bars
- Rationale: "minimise the instrumentation wires in bus bars"
- It is a challenging task specially in the highly inductive circuit of the MB

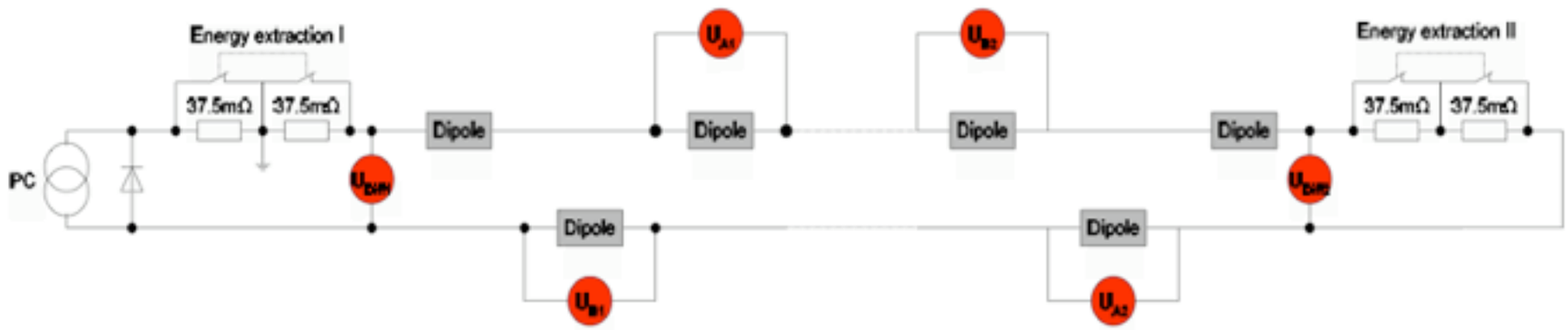

$$U_{Resistive} = U_{Diff1} - U_{Diff2} - N_{Magnet} \times 0.25 \times (U_{A1}+U_{A2}+U_{B1}+U_{B2})$$

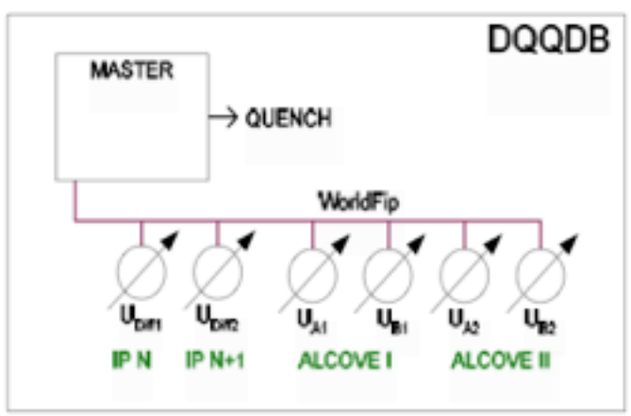

$V_{threshold} = 1V$

$t_{discriminator} = 1s$

what?

Number of HTS leads in LHC

13kA	7.5kA	6kA	600A
64	40	274	948

Quench Protection of HTS current leads

how?

- ☒ low threshold to avoid quenching
- ☒ combined detector for resistive heating and s.c. part quenching
- ☒ Energy extraction (not in all 600A circuits)

The protection of the leads: instrumentation

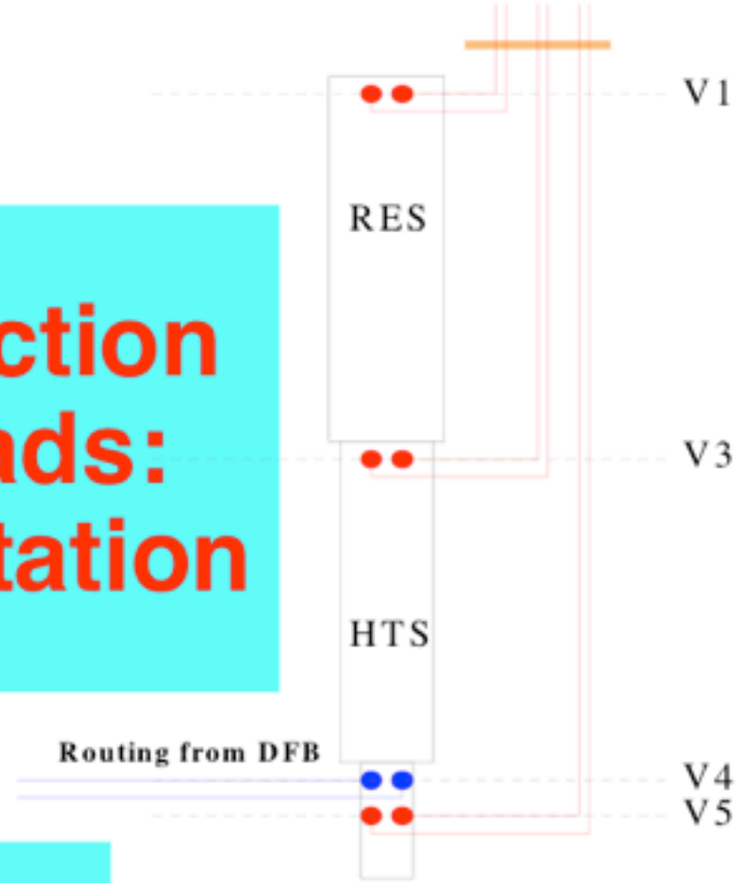

But… the lead should not quench⇒low threshold of 3 mV

"Protector"

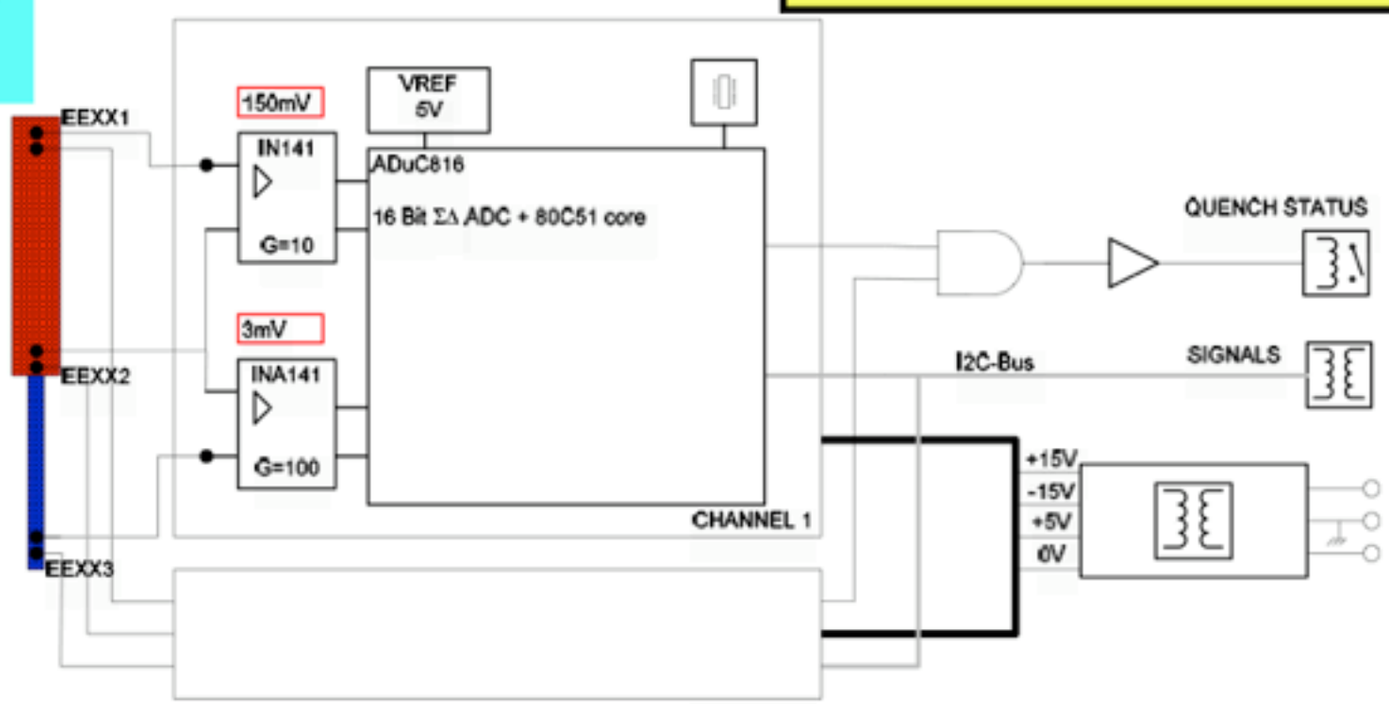

The quench loop

The problem which remains is passing remotely the information "quench" to non-distributed systems such as the energy extraction or the Machine Protection interlock (which will shut down the power converter)

Our solution: a hardwire Quench Loop running through the sector

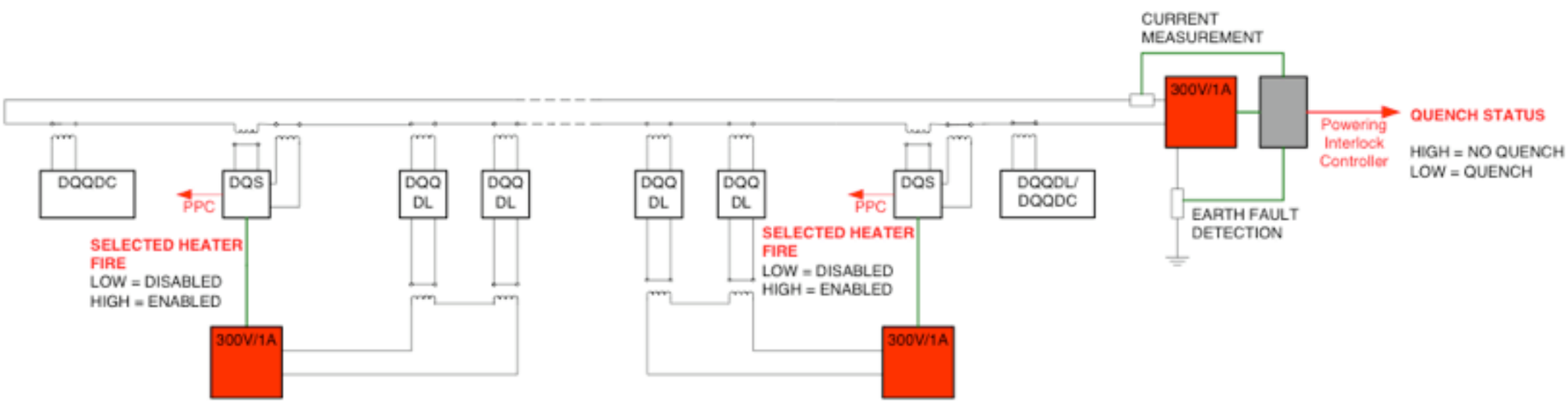

The “fire heater” loops for circuits RB and RQs (cont.)

Simulations have shown that the number of magnets to force quench in these cases are:

- **One switch not opening RB: 59 dipoles**
- **Two switches not opening in RB: 118 dipoles**
- **Switch not opening in RQ: 14 quads**

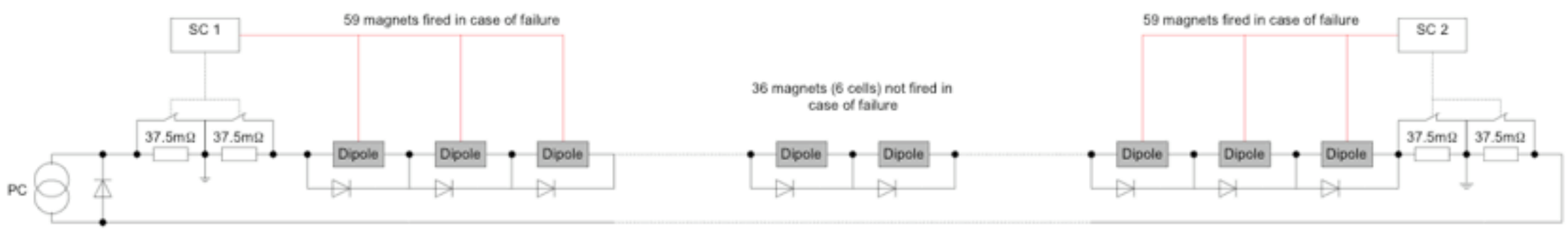

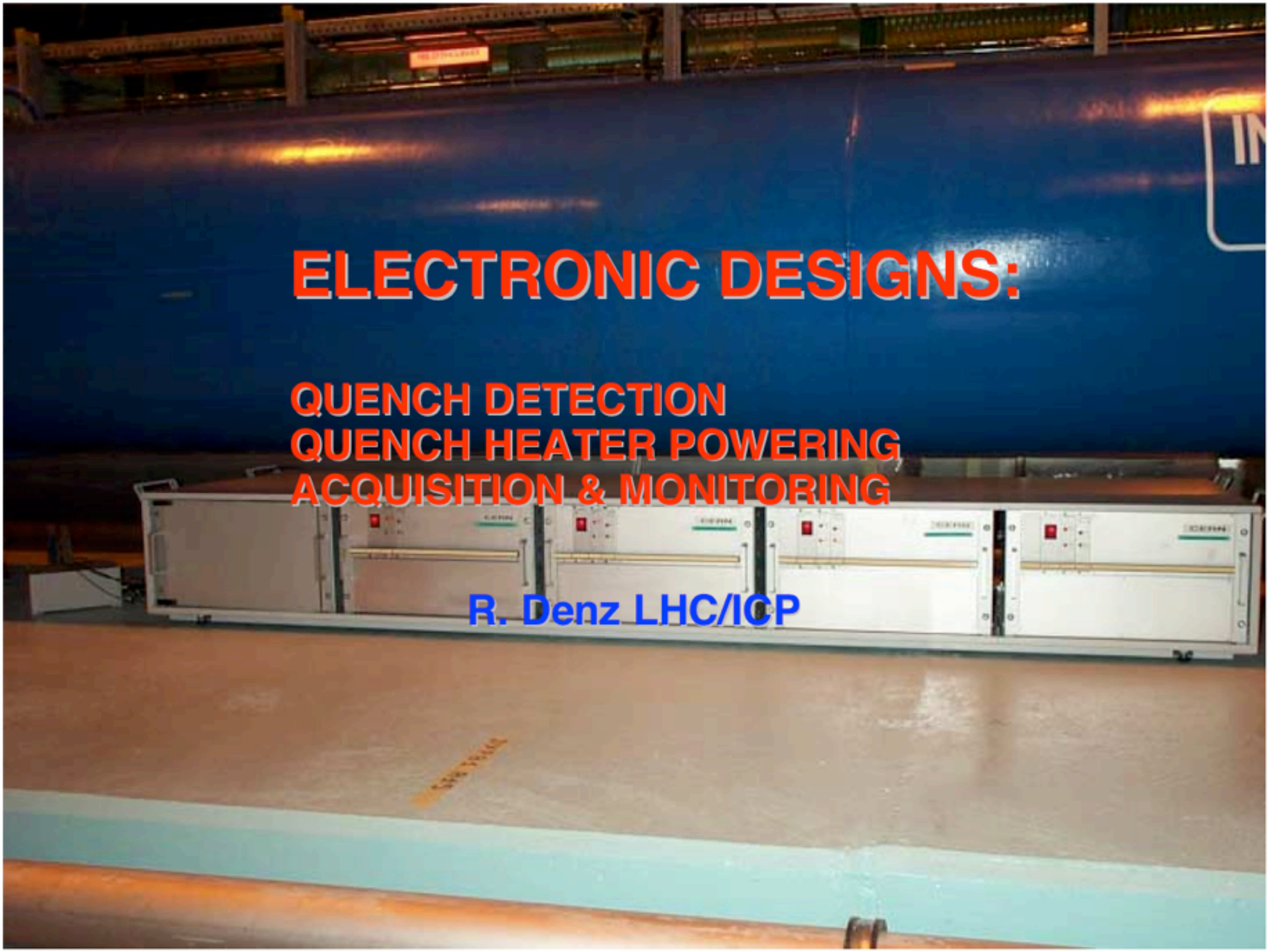

ELECTRONIC DESIGNS:

QUENCH DETECTION
QUENCH HEATER POWERING
ACQUISITION & MONITORING

R. Denz LHC/ICP

The Standard Instrumentation Feedthrough System

Cover Flange

Interface Box

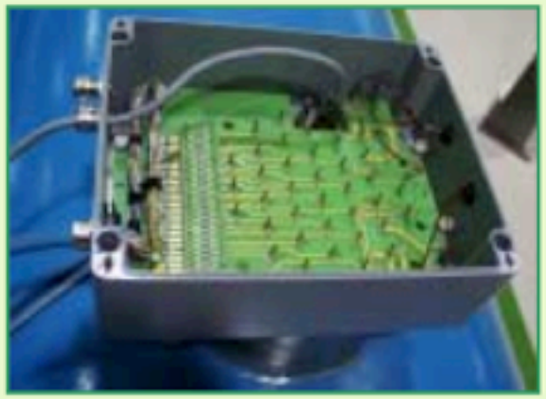

End of electrical wires soldering activity

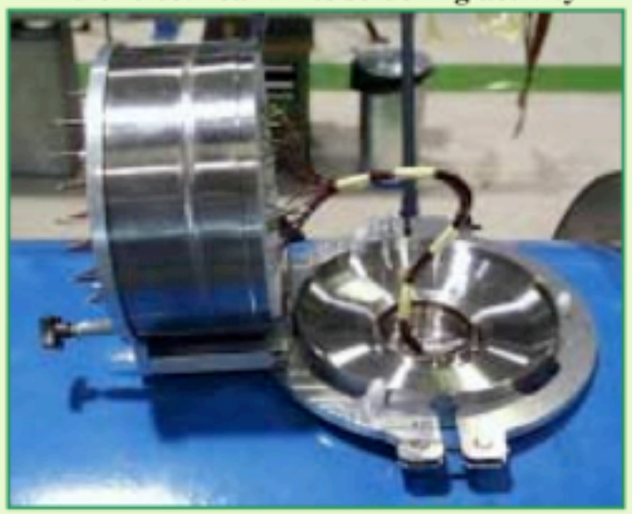

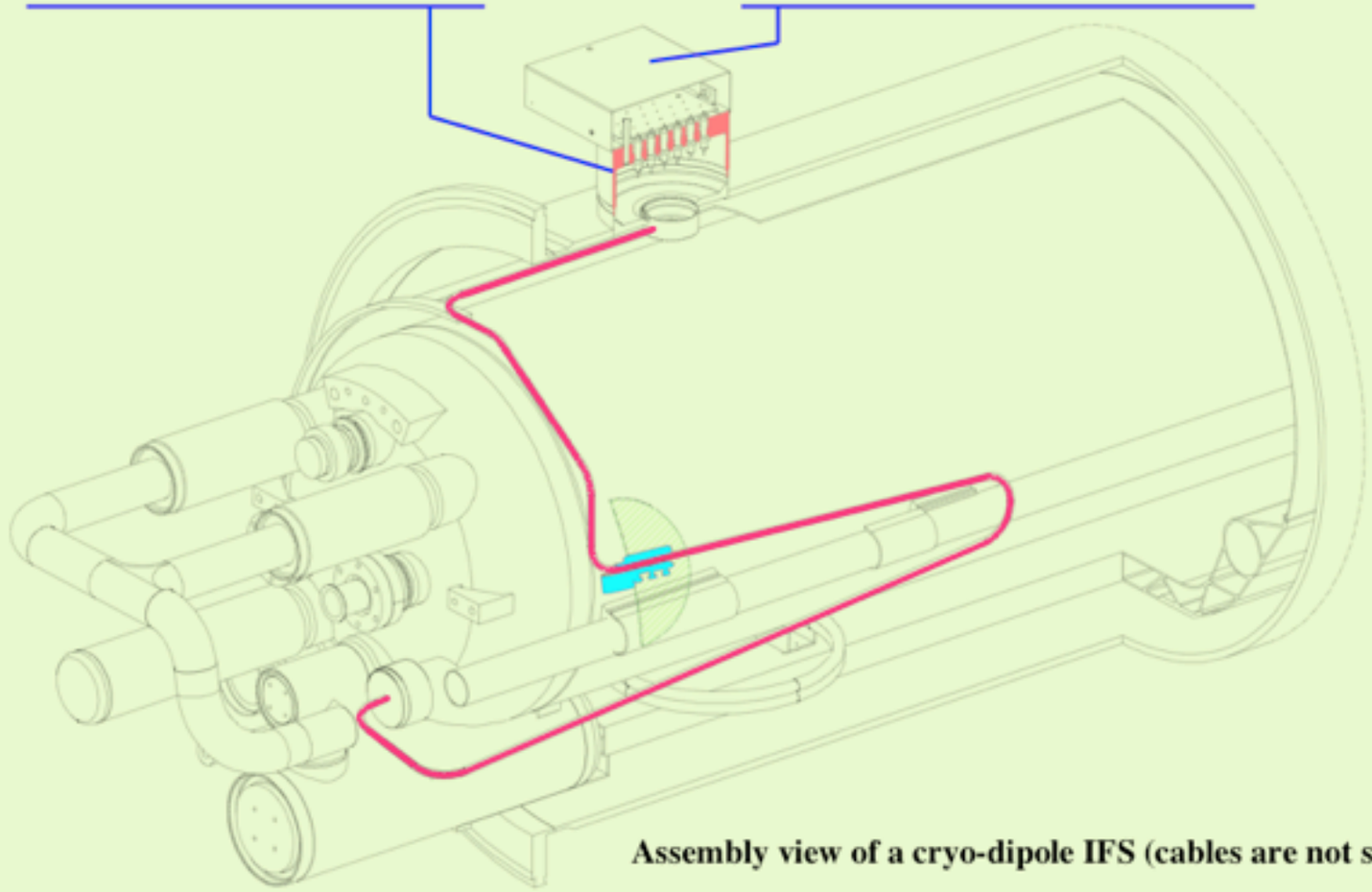

Assembly view of a cryo-dipole IFS (cables are not shown).

Assembly step: Bending of the IFS tube

Instrumentation Layouts

Local Protection - **Arc & DS Dipoles & Arc Quads**

Local quench detector DQQDL (R. Denz talk)

MB
6 V_Taps: 6 protection
8 DL (n=1)
8 QH but only 4 connected to HDS

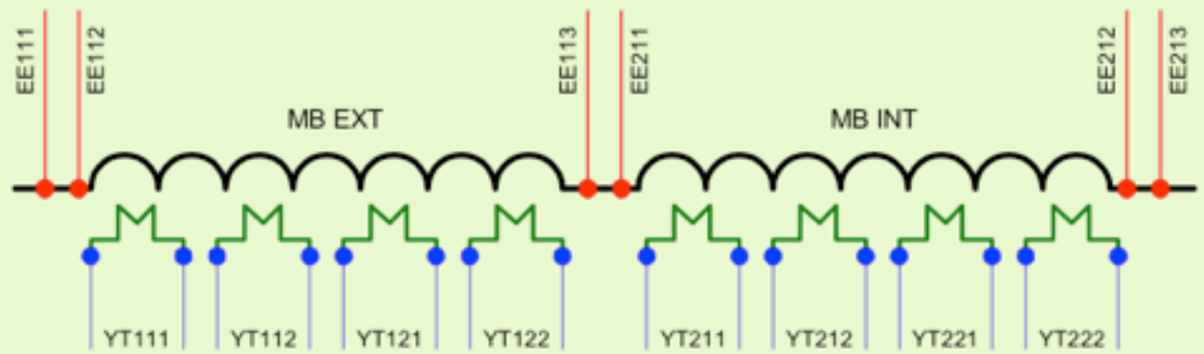

MQ
12 V_Taps: 12 protection
8 DL (n=4)
2 QH

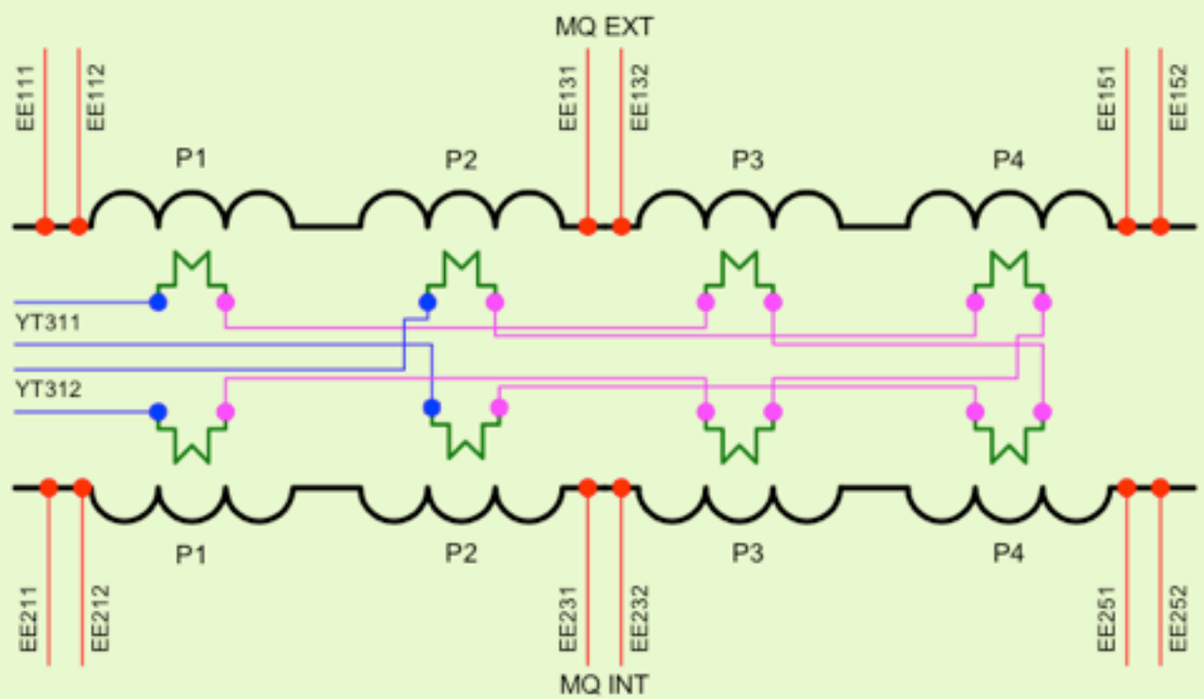

Instrumentation wires used in QPS

	Element	Location	Units	QH Wires		V_Taps Protection		V_Taps Diagnostic		vg/Eleme	
				x unit	global	x unit	global	x unit	global		
ARC	MBB	MB	1232	8	9856	6	7392	4	4928	18	
	MQ	MQ	392	4	1568	12	4704	8	3136	24	
	Total		**1624**	**11424**		**12096**		**8064**		**19.4**	
INSERTION	MQXA	Q1,Q3	16	4	64	2	32	4	64	10	
	MQXB	Q2	17	4	68	4	68	2	34	10	
	MBX	D1	4	4	16	2	8	4	16	10	
	MBRC	D2	8	4	32	2	16	8	64	14	
	MQY(1)	Q4,Q5	8	8	64	4	32	8	64	20	
	MQY(2)	Q4,Q6	6	16	96	4	24	20	120	40	
	MQML	Q5,Q6	10	4	40	4	40	8	80	16	
	MQM	Q7	2	4	8	4	8	8	16	16	
	MQM(2)	Q5,Q6,Q7	14	8	112	4	56	20	280	32	
	MBRS(2)	D3	2	8	16	2	4	20	40	30	
	MBRA/B	D4	2	8	16	2	4	20	40	30	
	MQ	Q7,Q8,Q10,Q11	24	4	96	12	288	0	0	16	
	MQTL	Q7,Q8,Q10,Q11,Q12	36								
	Total		**113**	**628**		**580**		**818**		**17.9**	
CURRENT LEADS	13KA		64			8	512			8	
	6KA		310			8	2480			8	
	600A		798			8	6384			8	
	Total		**1172**			**9376**				**8.0**	
CORRECTORS	All Types		6340					1	6340		
	Total		**6340**					**6340**		**1**	
	Global per instrumentation type		**9249**	**12052**		**22052**		**15222**			
	Grand total of QPS instrumentation wires			**49326**							

Conclusions and Final Remarks

- The 200 Energy Extraction Systems represent 296 Tons of Components
- 89 % is procured through contributions from Non-Member States (11 % from European Industry)
- The CERN team, handling this project, consists of one part-time engineer, one part-time technician (from a service contract) and one draughtsman (for three years)
- >90 % of all components has now been type tested and approved by CERN
- Only the 600 A facilities will need further investigation before decision is taken where to place the order
- For all other systems contracts are either placed or will be so before the end of 2001
- All components will be delivered to CERN before the end of 2004
- The total cost of the systems is 18'024'000 CHF (the European Reference Price). CERN will pay 6'978'000 CHF. The economy obtained through the collaborations with Non-Member States exceed 11 MCHF (or 61.3 %)

Main elements of QPS

- 16'000 quench heaters
- More than 2'000 diodes for 13 kA commutation at 1.9K
- 40'000 instrumentation wires
- 6000 quench heater power supplies
- 3400 multi-channel quench detectors
- 2650 acquisition and monitoring controllers
- 32 energy extraction facilities for 13 kA including
  - 256, 4.5 kA breakers,
  - 32 bus ways to equalise current over 4 parallel branches
  - 32 de-mineralised water cooling stations
  - 32 heavy resistors made of 3-4 bodies able to dissipate more than 10 GJ all together
  - 64 power controllers for opening breakers under 13kA (the last breaker will take full current)
- 180 energy extraction systems for 600 A (not less important!)

LHC

Quench Protection System

Status Pix

Bob Flora 2006 March 28

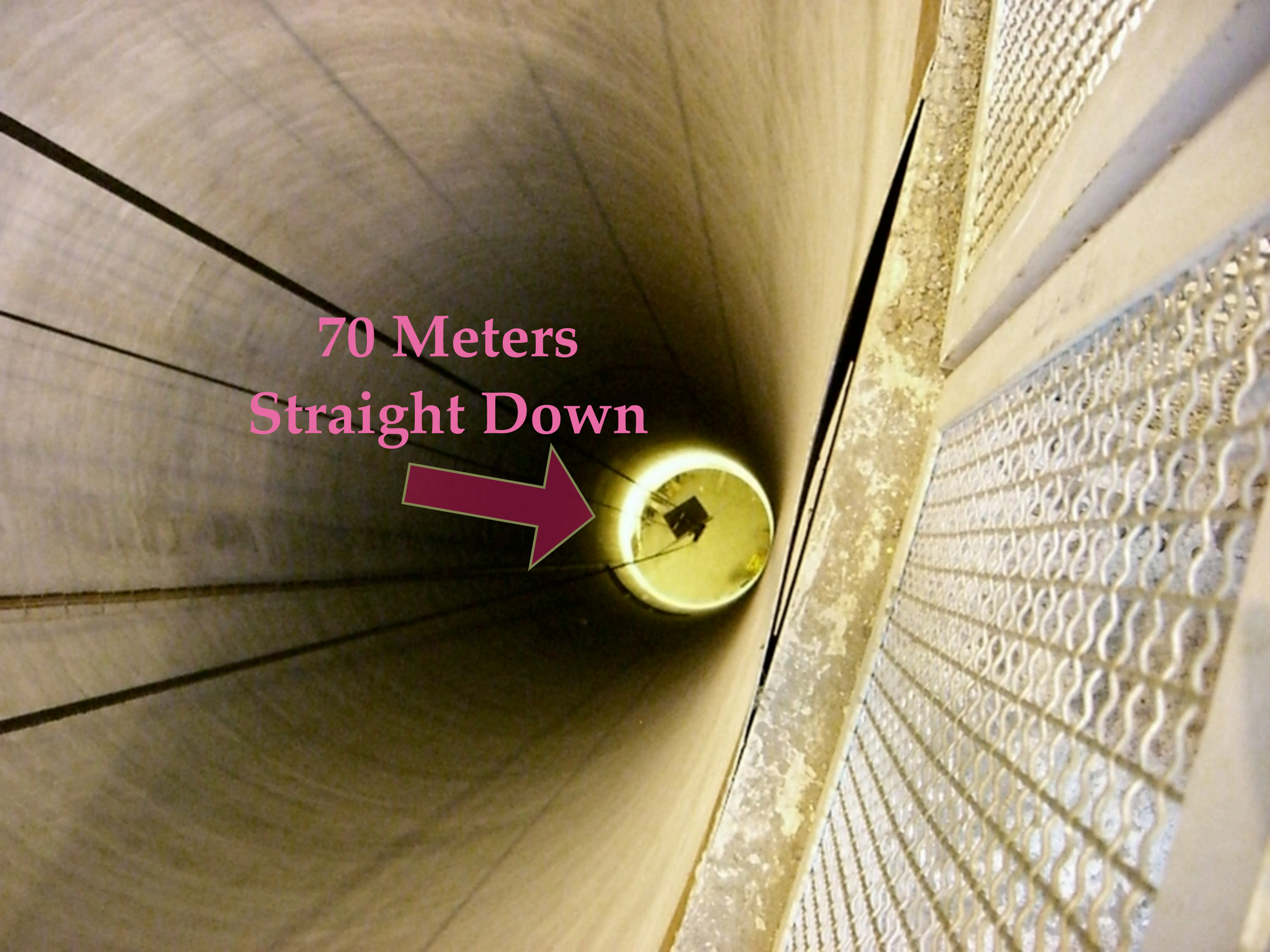
70 Meters
Straight Down

V2
CERN

Cold Diode

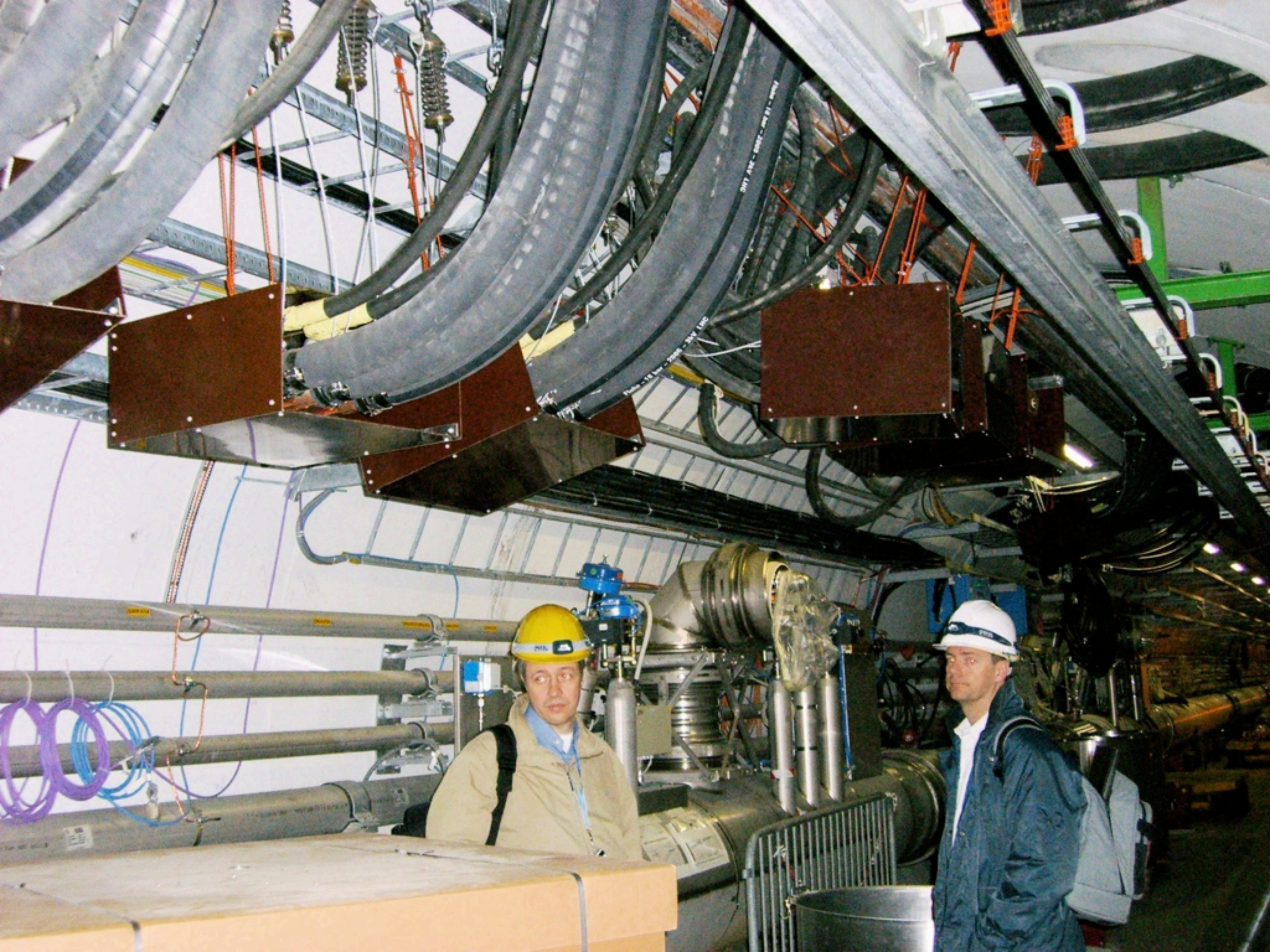

O.C.E.M.
POWER ELECTRONICS

Q1
1.7

Sub. 5
Sub. 4
Sub. 3
Power Connection Rock
TRANSTECHNIK
Sub. 2
Sub. 1
Electronics Rack

V OUT +
V OUT
Power
Connection

KEMPOWER
HORPHGA
400 V

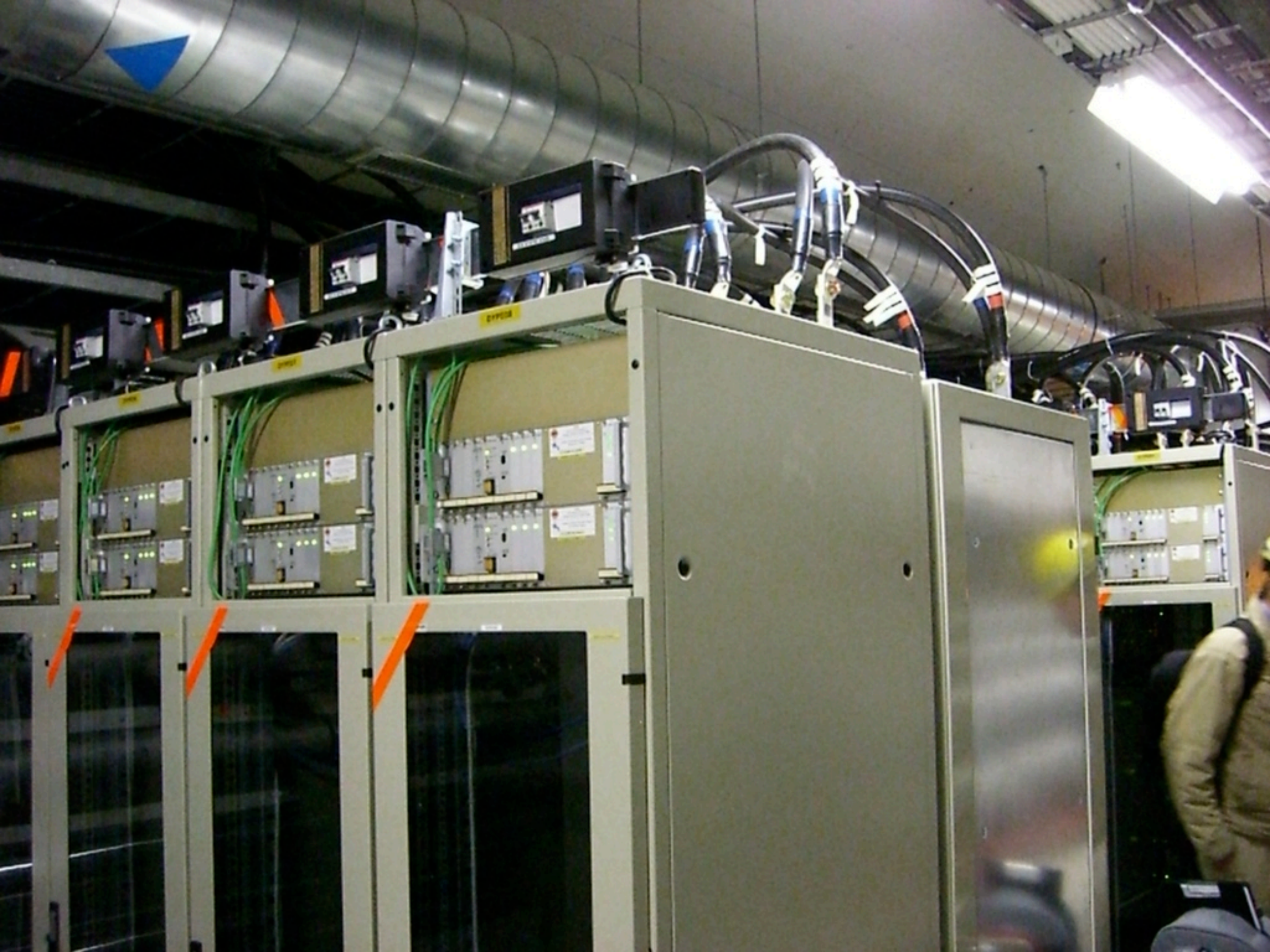

KEMPOWER
HCRPHGB____
400 V

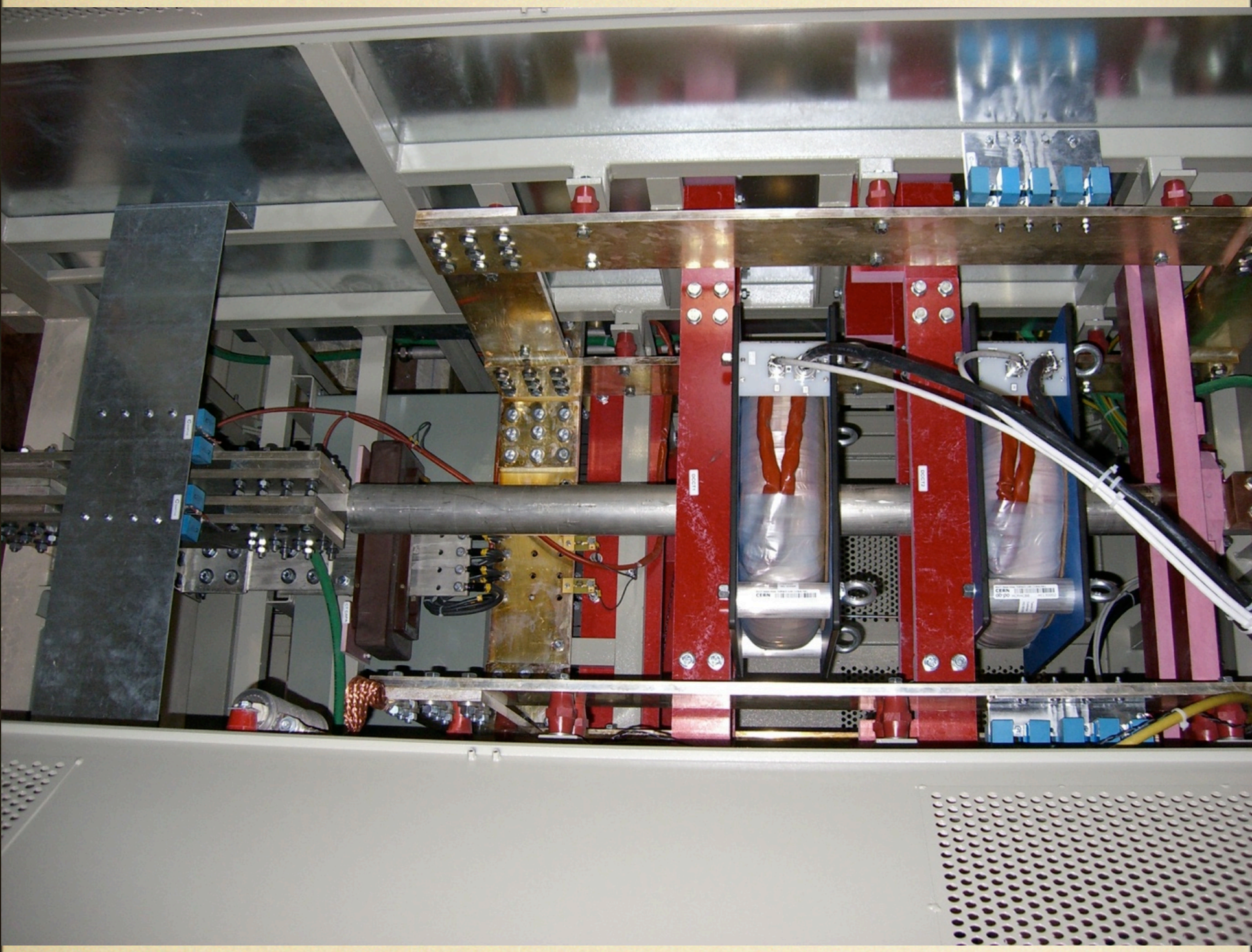

45009
ATTENTION !
JOIN THE
FLEXIBLE COUPLING
45433
ATTENTION !
JOIN THE
FLEXIBLE COUPLING
13
13

ATTENTION !
ATTENTION !

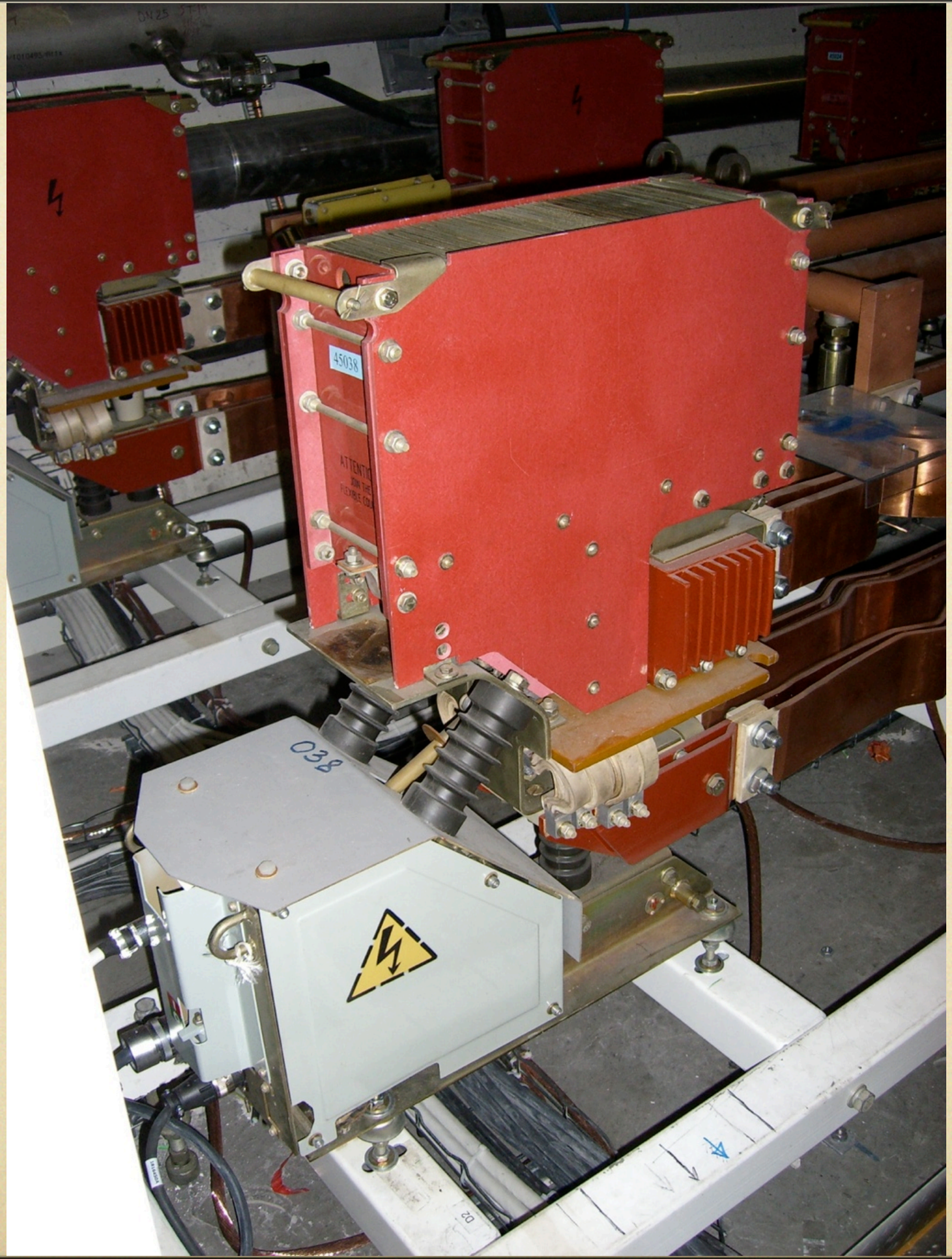
45038
038

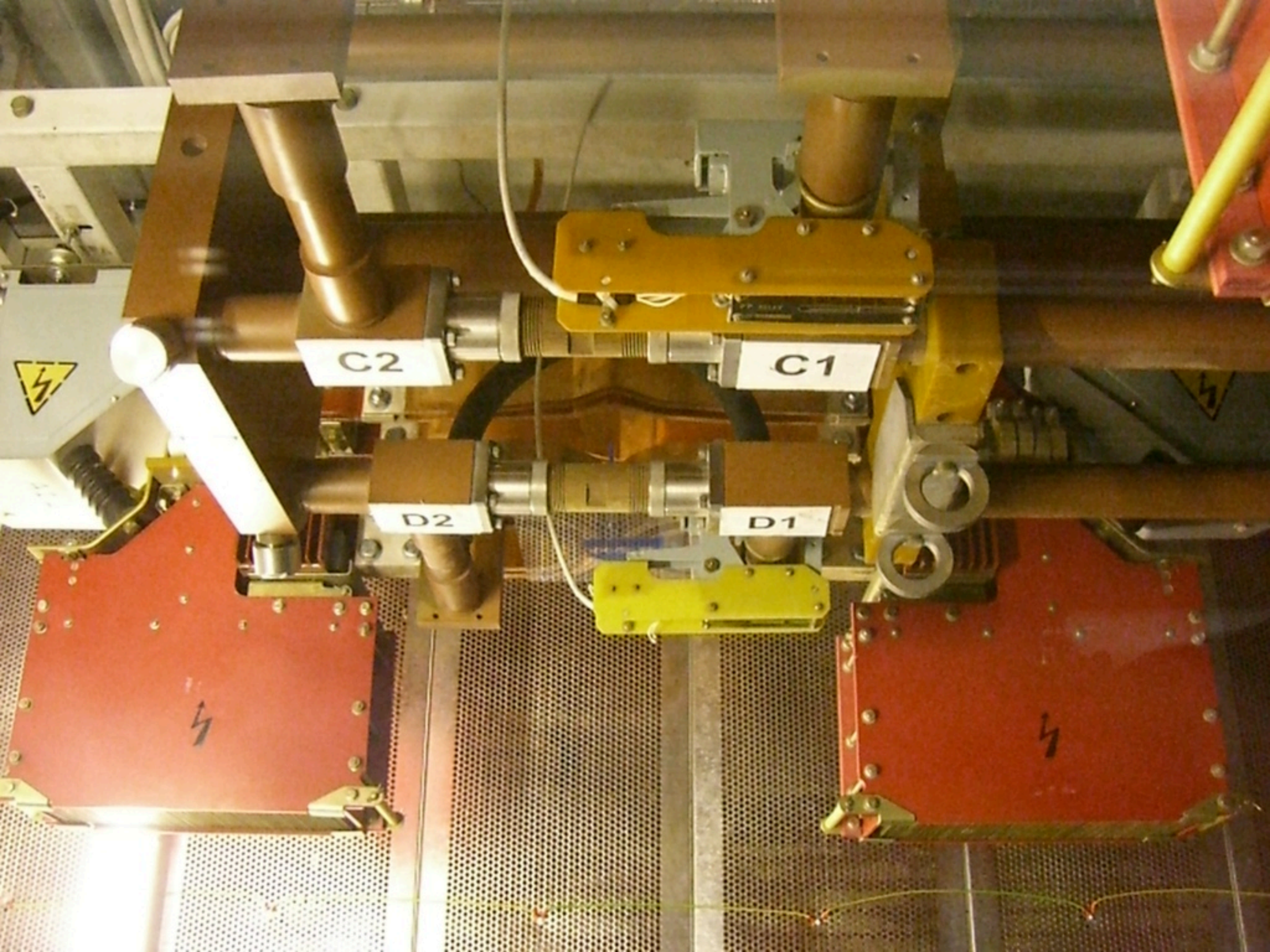
C2
C1
D2
D1

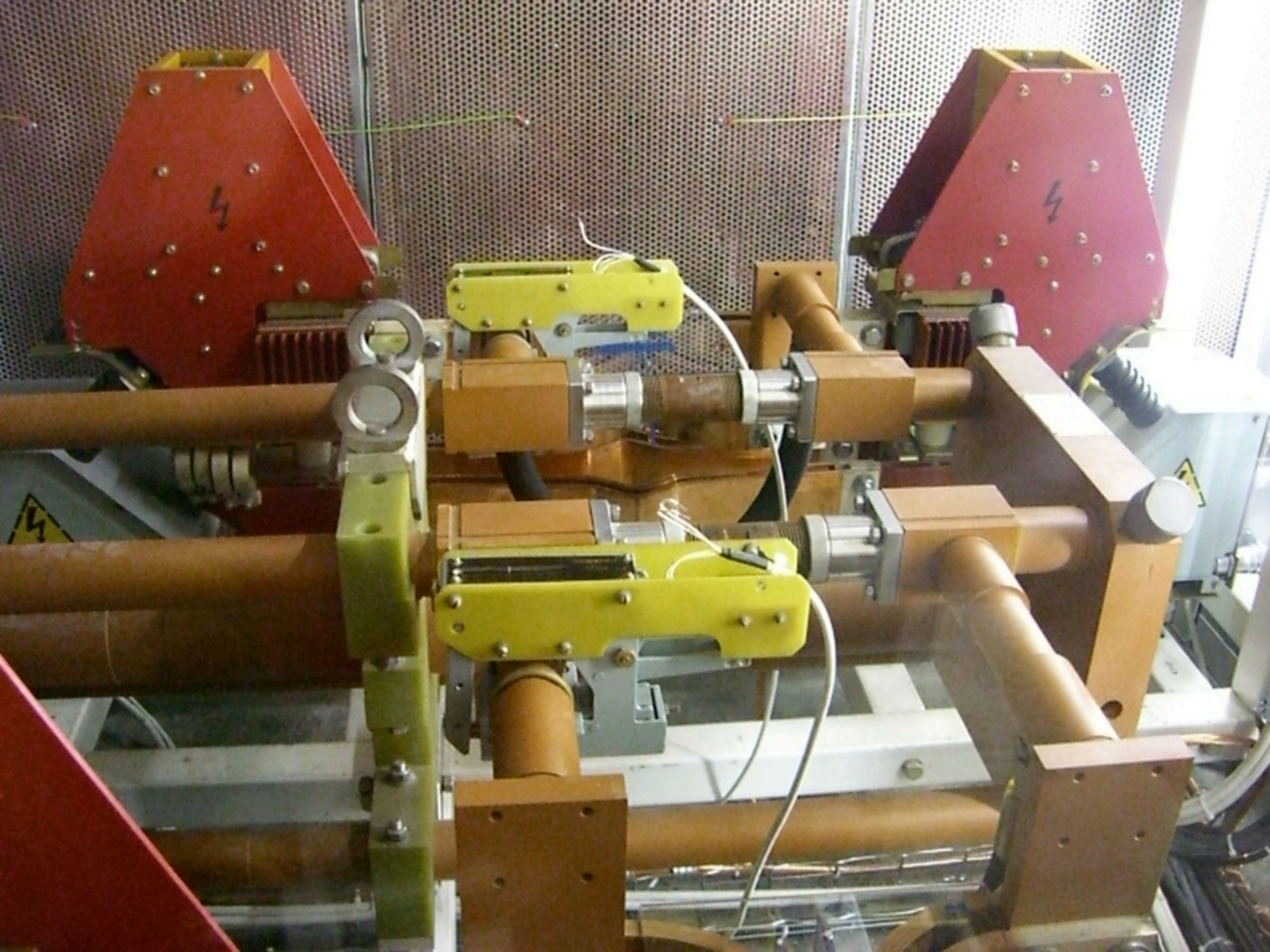

IHEP-CERN
IHEP-CERN
IHEP-CERN

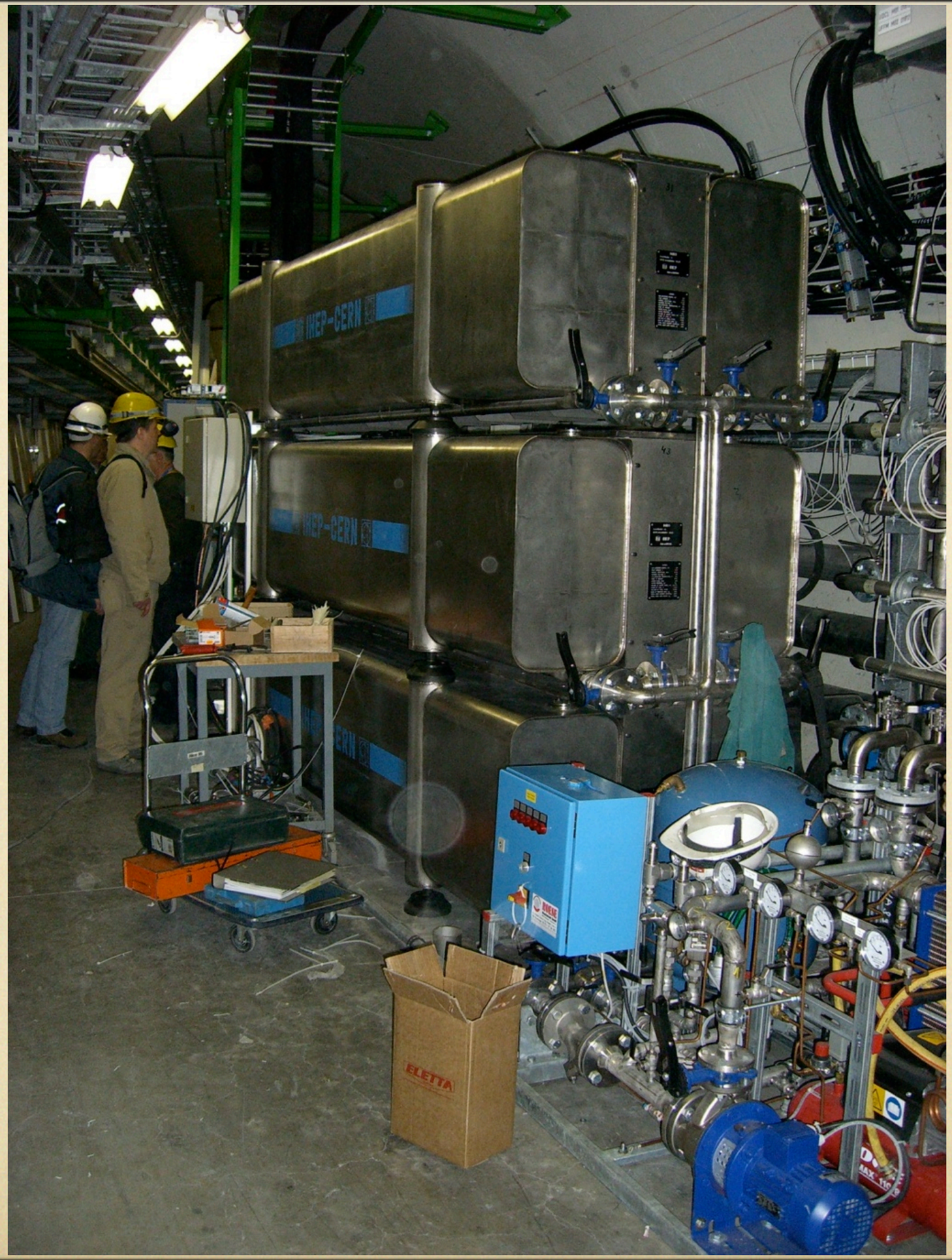
IHEP-CERN
IHEP-CERN
ELETTA

IHEP-CERN
IHEP-CERN

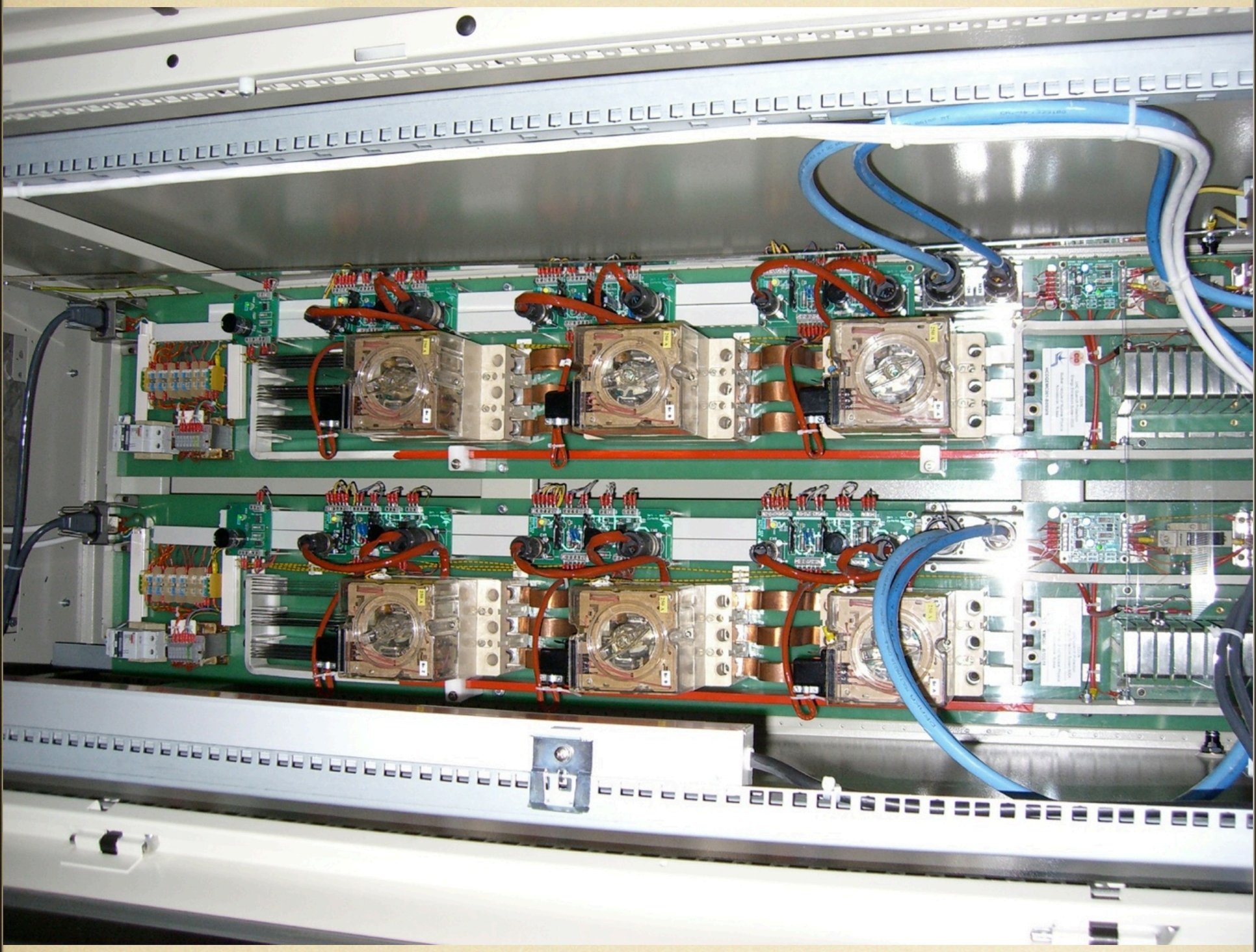

EATER DISCHARGE POWER SUPPLY
EATER DISCHARGE POWER SUPPLY
EATER DISCHARGE POWER SUPPLY
EATER DISCHARGE POWER SUPPLY
EATER DISCHARGE POWER SUPPLY
EATER DISCHARGE POWER SUPPLY

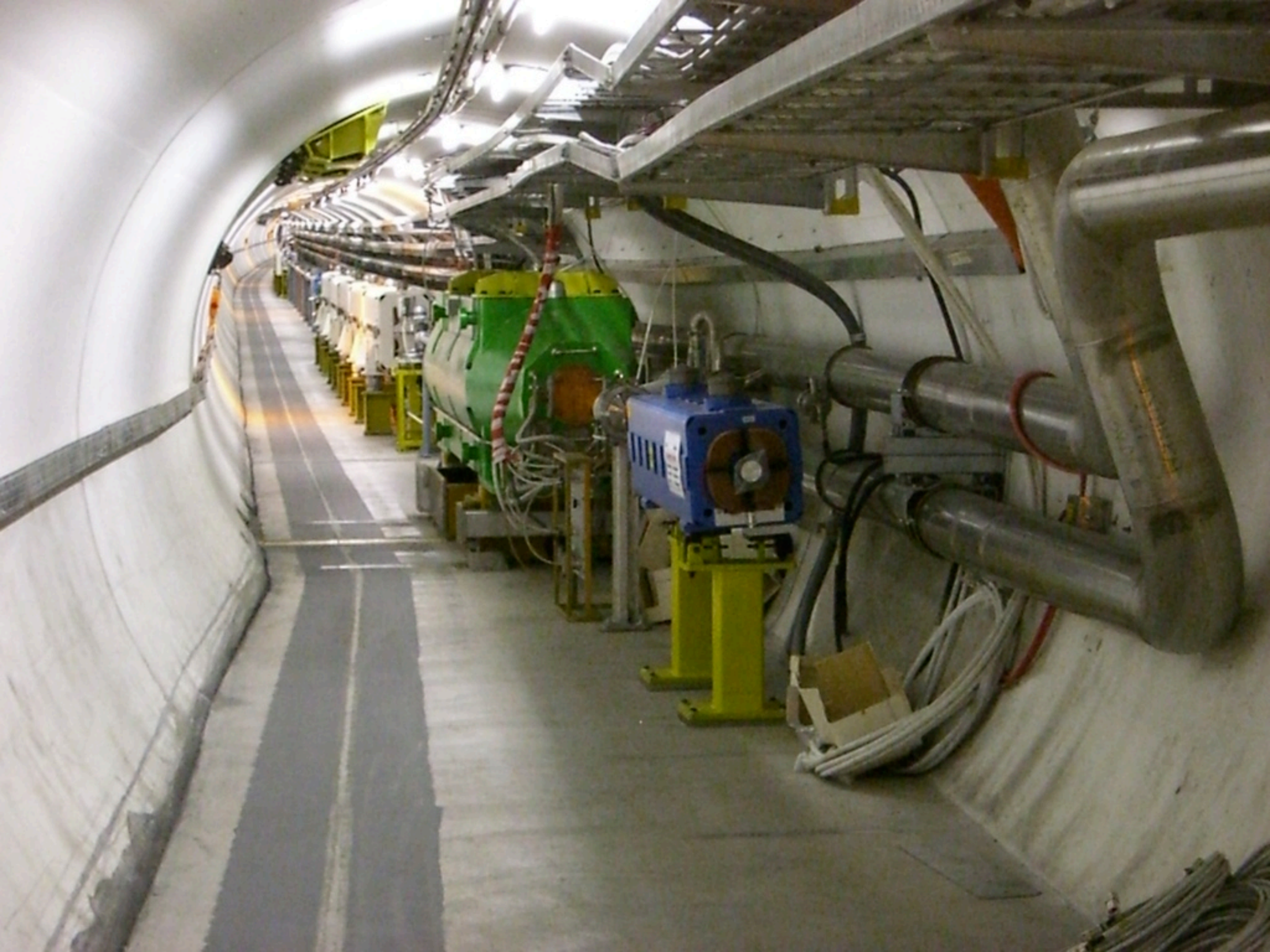

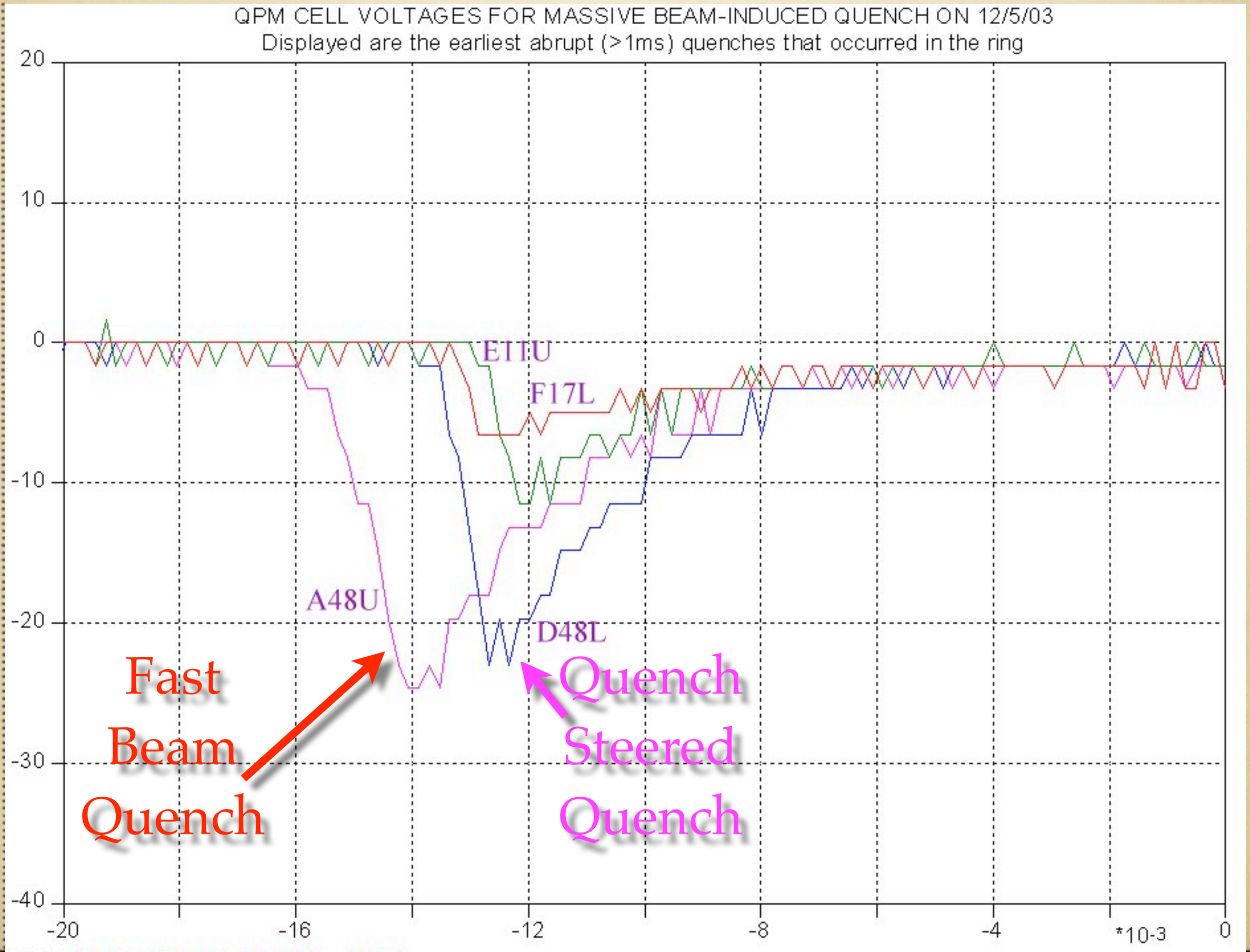
QPM CELL VOLTAGES FOR MASSIVE BEAM-INDUCED QUENCH ON 12/5/03
Displayed are the earliest abrupt (>1ms) quenches that occurred in the ring
20
10
0
-10
-20
-30
-40
-20
-16
-12
-8
-4
*10-3
0
E11U
F17L
A48U
D48L
Fast Beam Quench
Quench Steered Quench

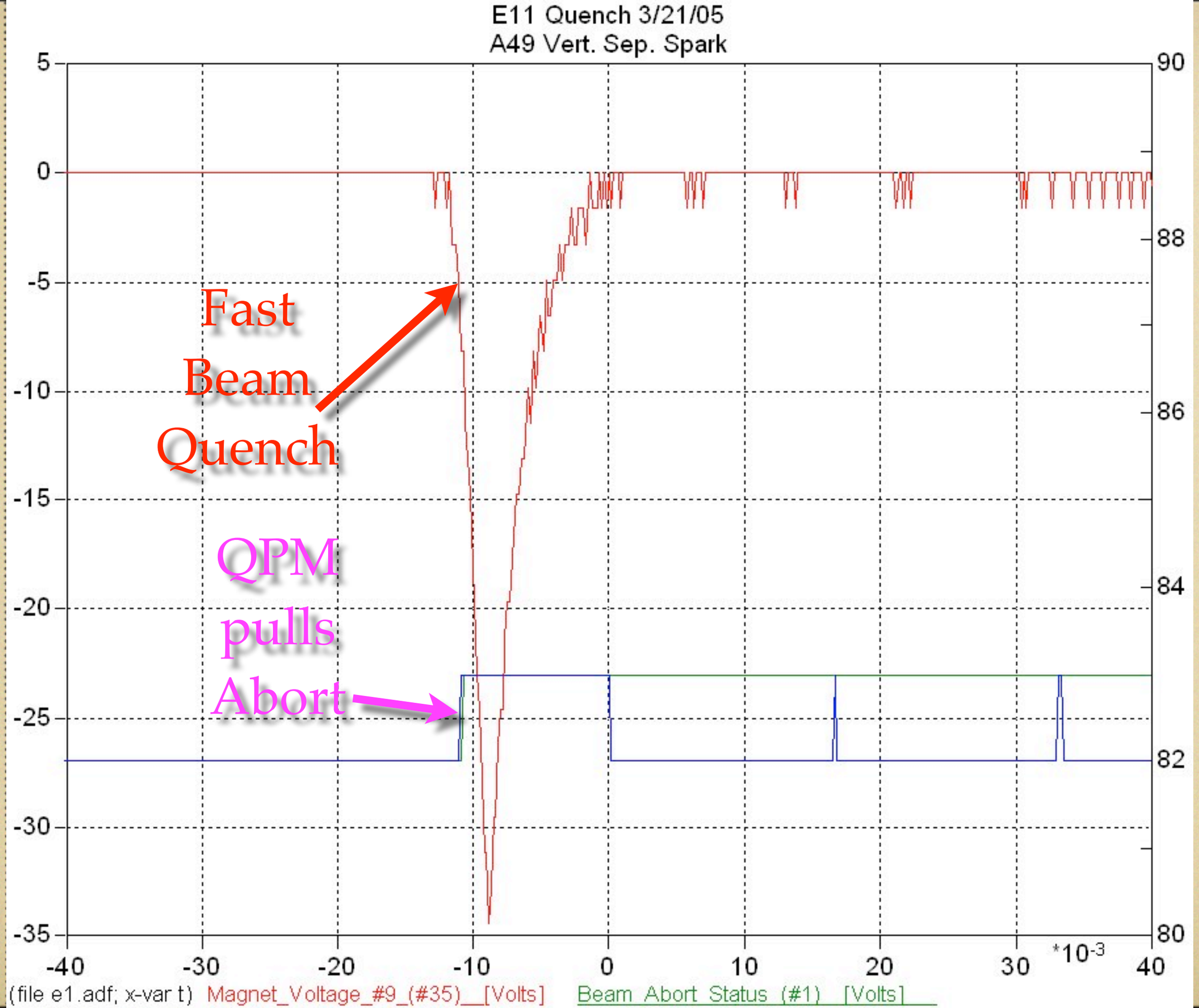
E11 Quench 3/21/05
A49 Vert. Sep. Spark
Fast Beam Quench
QPM pulls Abort
5
0
-5
-10
-15
-20
-25
-30
-35
90
88
86
84
82
80
-40
-30
-20
-10
0
10
20
30
40
*10-3
(file e1.adf; x-var t) Magnet_Voltage_#9_(#35)__[Volts]
Beam_Abort_Status_(#1)__[Volts]

Special Thanks to:

- Alvin Tollestrup
- Duane Voy
- Kevin Martin
- Owen Payne
- Bob Hively
- Dan Wolff
- Mike Lamm
- Knud Dahlerup-Petersen
- Reiner Denz
- Gert-Jan Coelingh
- Felix Rodriguez Mateos
- Dieter Hagedorn
- Karl Hubert Mess

Acknowledgments