ADVANCED CONCEPT FOR HIGH ENERGY ACCELERATOR

Alexander Mikhailichenko

Cornell University, Wilson Lab, Ithaca, NY 14853

Presented at FERMILAB on September 10, 2009

ABSTRACT

•We describe the method for long term acceleration of charged particles with the help of laser radiation.

•This method uses many multi-cell microstructures aligned along the straight beam path. Each cell of microstructure has an opening from one side. Focused laser radiation with appropriate wavelength excites the cells through these openings. This excitation is going locally, in accordance with instant position of accelerated micro-bunch of particles in the structure. For this purpose special devices controllably sweep focused laser spot along the openings. This arrangement, what was called Travelling Laser Focus (TLF), reduces the instant power required from the laser source and reduces illuminating time for the every point on the structure. So the laser density does not exceed 0.3 J/cm^2 for accelerating rate ~10Gev/m. Illumination time for every point is <0.3ps while the time duration of laser pulse is ~0.1 nsec. So 2 x 1 TeV collider will be ~2 x 100 m long and will require a laser flash 2x0.3 J total.

•All components involved in the method described are using technology of present day. For energy ~1TeV the luminosity could reach 10^{35} with wall-plug power of few tens of kW only. Cost of such installation could be as low as 100M$ (without cost of detector).

Why do we need high energy particles

Presence of particles with energy >1000 TeV in cosmic rays gives the base for further quest for high energy achieved in accelerators

This tell us that high energy particles were somehow involved in general processes of formation of our universe.

***

Some authors speculate that supernova shock freely expanding into stellar wind cavity may produce particles up to 10^{19} eV of a supernova explosion in a compact star.

H.Volek, P.Biermann, " Maximum energy of Cosmic –ray particles Accelerated by Supernova remnant Shocks in Stellar Wind Cavities", Astrophysical Journal, Part 2-Letters (vol.333, Oct 15, 1988,p.L65-L68

Although in mostly publications radiation does not considered at all and claim that shock wave (even complicated genealogy) could accelerate up to these energies –

Experimental confirmation of high energy component in cosmic rays is a motivation.

How big is “High energy”

Spectrum flux of Cosmic radiation

From Wikipedia

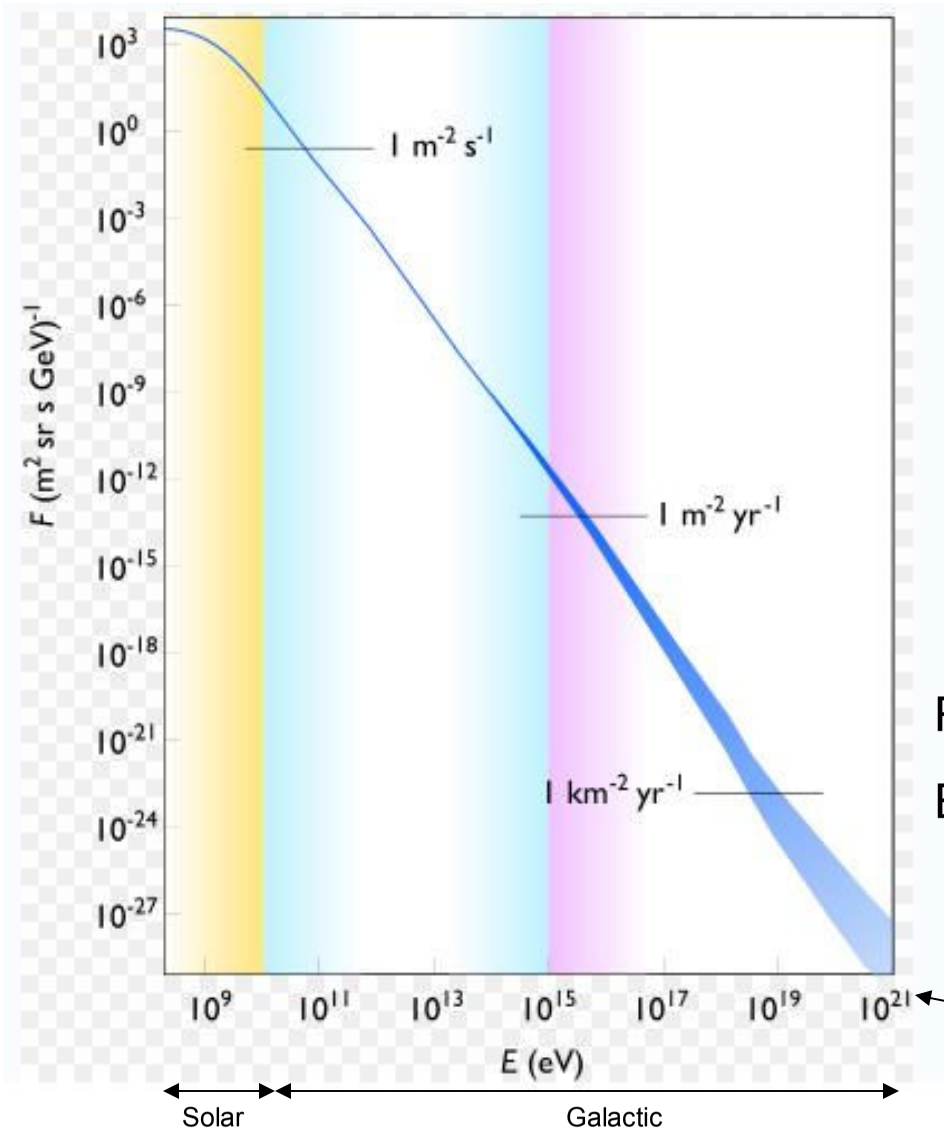

Radiation is pretty isotropic

Energy density~0.6eV/cm^3

Single particle carries 1kJ

How one can reach these levels-

Livingstone diagram

Fixed target : $E_{cm} \approx c(Em)^{1/2}$

Collider : $E_{cm} \approx 2E$

1TeV cm e^+e^- collider will be equivalent $1TeV \times 2 \cdot 10^6 \approx 2 \cdot 10^{18}$

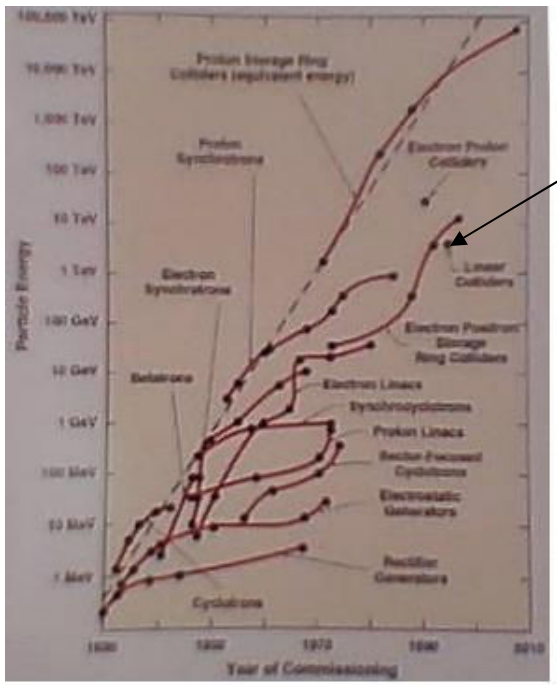

From A.Chao, W.Chou poster

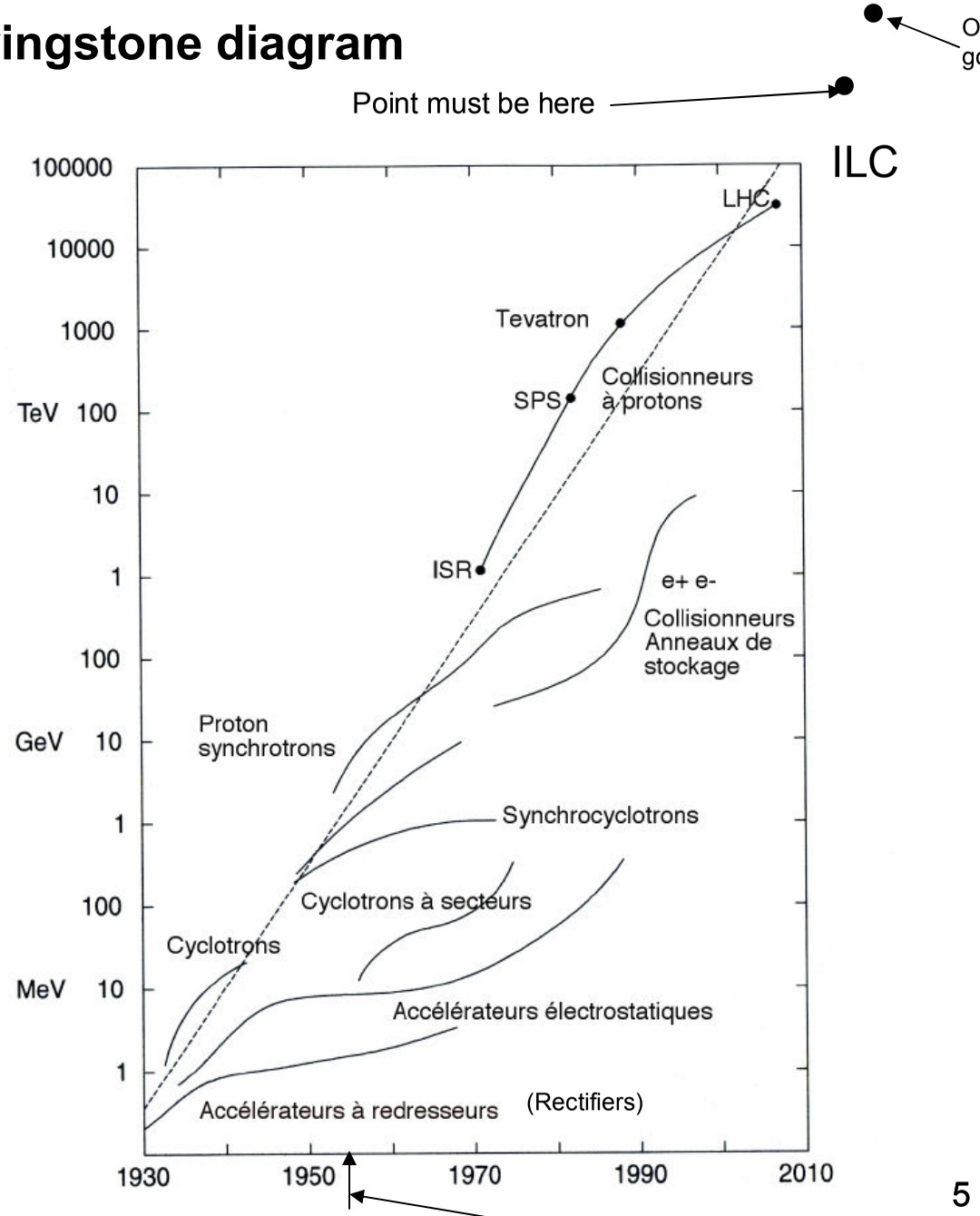

Looks like evolution diagram in biology …

First published in 1954

OBSTACLES ON THE WAY TO HIGH ENERGY

First disastrous wave arrived with laser people.

Since it was understood, that electric field strength in a focused laser spot has tremendous values, numerous proposals were generated in attempt to utilize this high field strength.

It was spend a lot of time (and publications) for explanations from accelerator physicists, that there is no long-term acceleration in free space and that the field what accelerates the particles, reaches it's maximum on the surface.

There is no either any *stable* acceleration if the distance between trajectory and closest point on the surface is more than an accelerating wavelength.

Stable means here –not sensitive to fluctuations in a laser beam intensity and its transverse distribution and, of cause, *a long terms* acceleration.

This first wave undermined the subject significantly in the minds

Second disastrous wave arrived with plasma people.

People worked there for decades could not reach the goal of theirs activity–controlled thermonuclear reaction. Some of them began to look for escape subjects. These people have rather high formal qualification.

However, only recently they realized that the small parameter in accelerator physics is $\Delta p/p$, not $\Delta v/v$.

Even now not all of them realized that in accelerator physics small value is something about 10^{-7} (say in terms of emittance) but not with respect to unity.

Seems, that nobody of these people till now have clear understanding that any scheme for a long-term acceleration must be stable under fluctuations of parameters.

It is easy to met publications made with use of tens of hours of supercomputer processor time for modeling the plasma waves for acceleration and numerous sophisticated theoretical investigations on this subject. But only one look onto results of these publications– and it is clear that they do not contain any indications that fluctuations included.

Same surprisingly look some experimental results from the plasma people. They are showing the transverse cross-section of the laser driving beam or electron driving beam even without mentioning that these cross-sections must be *round* with the accuracy satisfying the emittance preservation -10^{-8}. Even then they must prove that *statistical* fluctuation in diluted plasma can not destroy the emittance.

But result will be likely negative, as these people lost the spirit of finished work, as they did this in a thermonuclear activity. A lot of other factors not taken into account and important for linear collider operation will destroy any scheme proposed by plasma people.

TECHNOLOGY AVAILABLE IS ALWAYS AHEAD OF SIENTIFIC UNDERSTANDING

- Technology might be at hand in general, so with necessary funds one can buy it on the market.
- Phonograph could be manufactured in Ancient Egypt. Writing sounds (words) on a wooden plates covered by beeswax or clay tables was a common procedure. Disk phonograph is even closer to the practices of those ancient days. So if somebody could show this device at those times, it would be not a problem *to fabricate* (make) a working copy with technology available there. Jewelry can serve as a reference for fine work possibilities.
- Delta-wing and even some simple electrical elements also can fulfill the list. One can easily add to this. So as one can see, the driving force here is an idea on how combine things in desire to reach one specific goal with equipment available.
- Steam engine could be manufactured the times of Rome Empire. Usage of this kind phenomenon for transportation could be demonstrated also: just if one could make a belt from rotating sphere to the wheel in a famous toy developed by Hero.

Ancient Egypt

Ancient Greece

Daedalus and Icarus

Ancient Rome

Our goal was to find such a scheme for acceleration of charged particles, which can be realized at present days with technologies available on the market.

This activity requires shill understanding on what is possible to do and on how to do it with the existing technology.

Field strength in a laser wave

Laser is a natural source of power for application in accelerator physics. Really, the flux of power *P* running through the area *A*

$$\vec{P}\left[\frac{Power}{Area}\right] = \vec{E}\times\vec{H} = \vec{n}\frac{E^2}{377} \quad [\mathrm{W/m^2}]$$

defines the electric field strength as

$$E \cong \sqrt{377\frac{P}{A}} \quad [\mathrm{V/m}]$$

Photons are coherent

If 1W falls on 1 cm^2, then E≈2 kV/m

If 1W falls on 4 μm^2, then E≈10 MeV/m

One can easily scale the last numbers to *GW* and even *TW* levels of laser power

Natural limit for the field strength emerges from requirement that the work done by electric field to the particle on the distance of Compton wavelength is equal to the rest energy of electron-positron pair

$$E^{\infty} \cong \frac{2mc^2/e}{\lambda\!\!\!^{-}_C} \cong 1MeV/3.86\cdot 10^{-13}m \cong 2.6\cdot 10^{18}V/m$$

Interaction between EM wave and particle is a two photon process

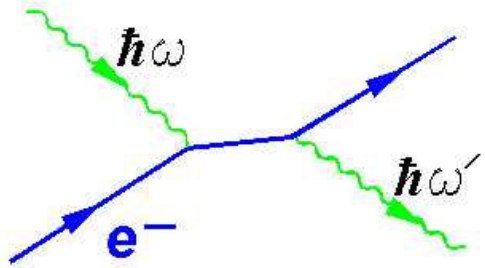

Coherent photons stored in cavity

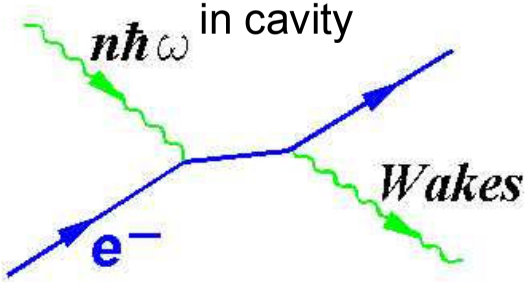

Particle acquires *many* RF photons during the acceleration process. In principle one can imagine the energy exchange between single high energy photon (having TeV scale), but in this case the source of these photons in quantities required will be a much more difficult problem, however.

This second photon is crucial agent in all business. Presence of this (radiated) photon allows, for example, particle acceleration by the plane wave; the process is going while particle re-radiates. In terms of photon absorption, the cross section of this process decreases with energy preventing usage of this method at high energy.

The possibility to accelerate charged particles of any sign of charge is a vital component for High energy physics.

It is not shown where this second photon hidden in plasma methods, however (Cherenkov). Accurate to 10^{-9} confinement of accelerating field is not possible due to low density of carriers. Looks like plasma-methods are underestimate importance of positron acceleration.

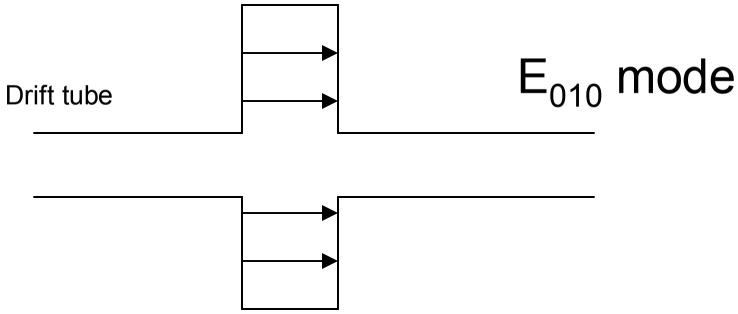

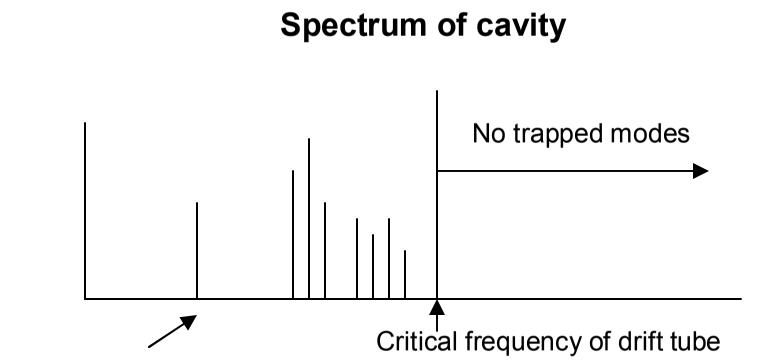

Main mode E_{010} contains many coherent photons

Energy balance after the bunch passage

$$\overline{(E_{sp}+E_0)^2} = \overline{\sum(E_{sp,i}+E_0)^2} \rightarrow E_{sp,i}^2+2E_{sp,i}E_0+E_0^2$$

Change of momentum defined by different formula

$$\Delta L = \frac{1}{c^2}\int \vec{r}\times((\vec{E}_0+\vec{E}_{sp})\times(\vec{H}_0+\vec{H}_{sp}))dV - \frac{1}{c^2}\int \vec{r}\times(\vec{E}_0\times\vec{H}_0)dV = mc\gamma\vartheta$$

One example

Magnetic field lines

Beam is going exactly through the center of cavity,

No energy change

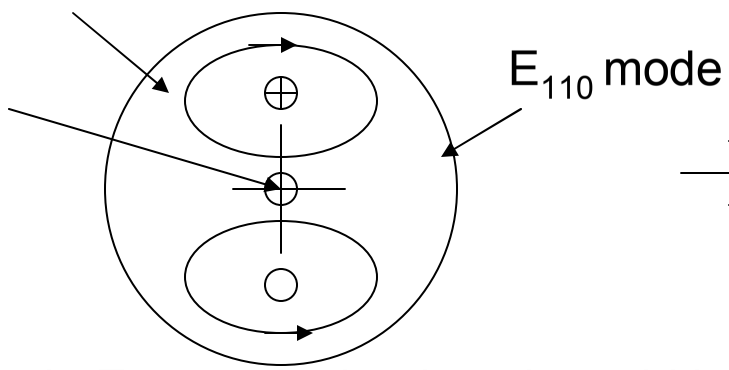

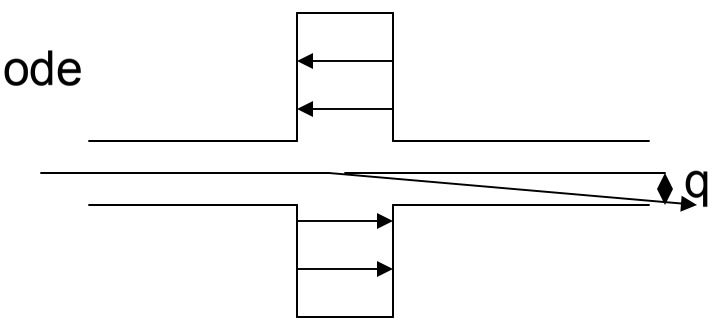

No spontaneous radiation in E_{110} mode, but bunch could be deflected (Girocon)

That is why RF cavity can focus beam (and we will use this)

TRAWELING LASER FOCUS (1989)

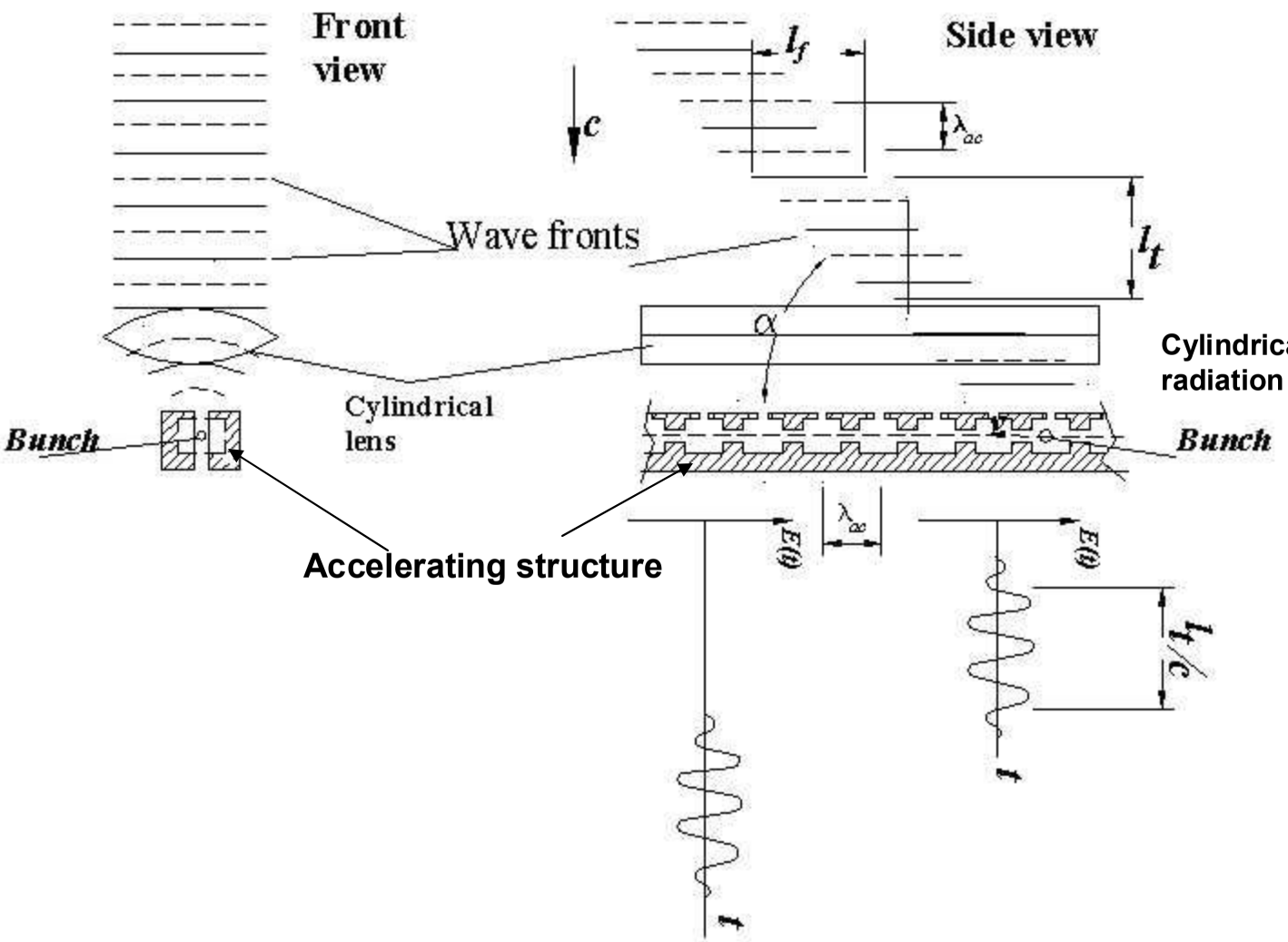

Cylindrical lens focuses laser radiation in transverse direction.

This method eliminates restrictions associated with Raleigh length

$$Z_R = \pi\, w^2(0) / \lambda$$

Laser-Induced Damage in Dielectrics with Nanosecond to Subpicosecond Pulses

B.C.Stuart,M.D.Feit, A.M.Rubenchik, B.W.Shore,M.D.Perry, PRL, vol 74, n12, 20 March 1995, p.2248

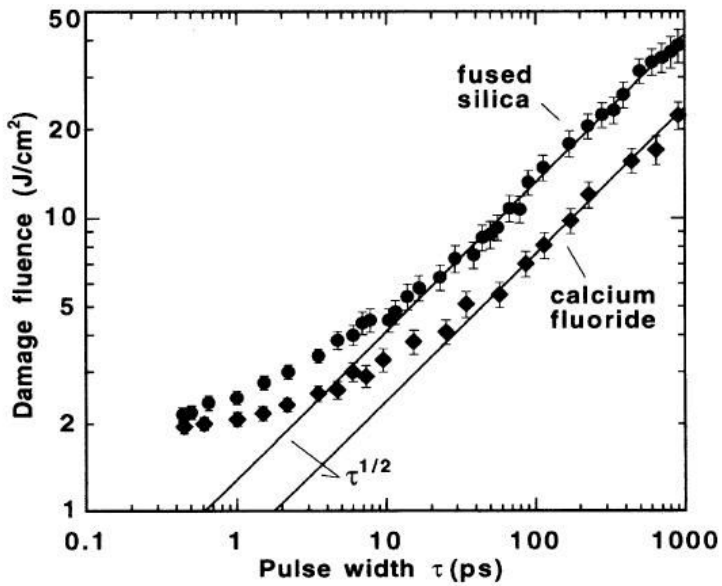

FIG. 1. Observed values of damage threshold at 1053 nm for fused silica (●) and CaF_2 (◆). Solid lines are $\tau^{1/2}$ fits to long pulse results. Estimated uncertainty in the absolute fluence is ±15%.

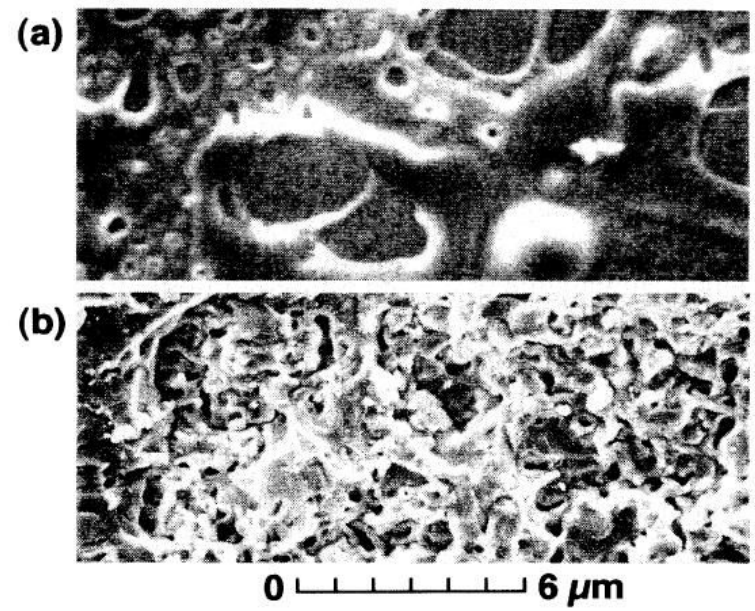

FIG. 2. Scanning electron micrograph of front-surface damage of fused silica produced by 1053 nm pulses of duration (a) 900 ps, showing melting, and (b) 500 fs, showing ablation and fracture.

1053 nm Ti:sapphire laser system; less than 1 nm rms surface roughness
Damage is characterized by ablation with no collateral damage.

Saying ahead, in our method the laser density is <0.3 J/cm^2 for 30GeV/m

continue

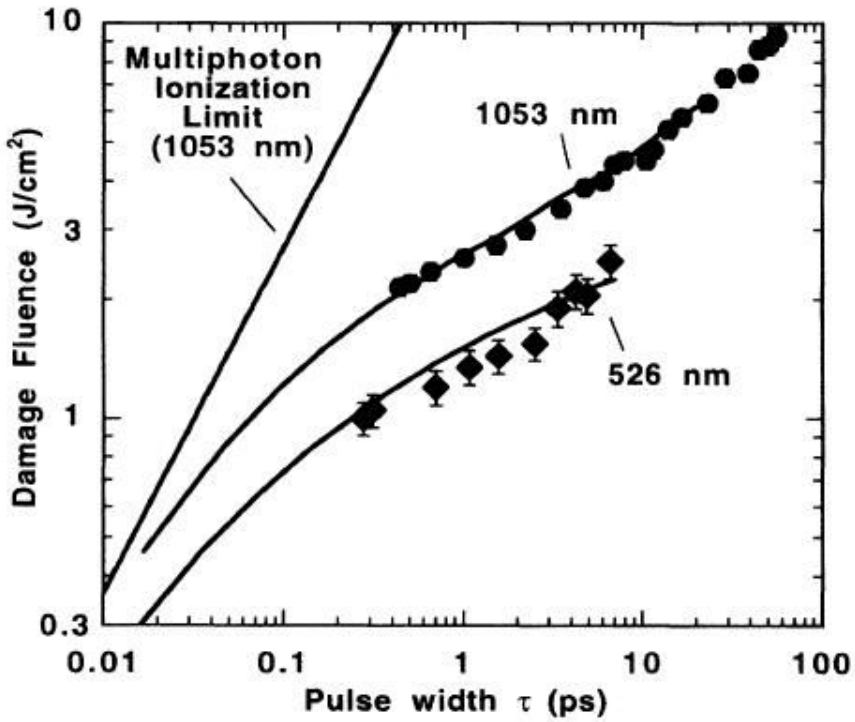

FIG. 4. Experimental and theoretical damage thresholds for fused silica at 1053 nm (●) and 526 nm (◆). The theoretical damage thresholds (solid curves) correspond to the formation of a critical density plasma ($\approx 10^{21}$ cm^{-3}), as discussed in the text. Relative errors in the experimental data are shown, estimated absolute error is ±15%.

In our method time duration is ~0.3 ps ; again laser density is ~0.3 J/cm^2

Other experiments reported that density measured 6 *J/cm*^{2} for 1 *ps* pulse duration and 10 *J/cm*^{2} for 0.3 *ps* pulse.

For the reference; for 3*cm* long structure the pass-time to be 100 *ps*.

REALIZATION OF TRAVELING LASER FOCUS WITH SWEEPING DEVICE

We proposed in 1989 a method on how to arrange this local excitation with the help of sweep of focused laser radiation along the accelerating structure and called this procedure Travelling Laser Focus (TLF).

Laser radiation applied to every point of structure during t= l_t / l_{ac},

The number of accelerating cells excited simultaneously is ~ l_f / c

The focal point is following the beam *in average*.

Phase of the laser radiation is synchronized once with the particle's bunch motion.

Accelerating cells in a structure separated in longitudinal direction with distance l_{ac}, so an electromagnetic field is in phase inside each cell.

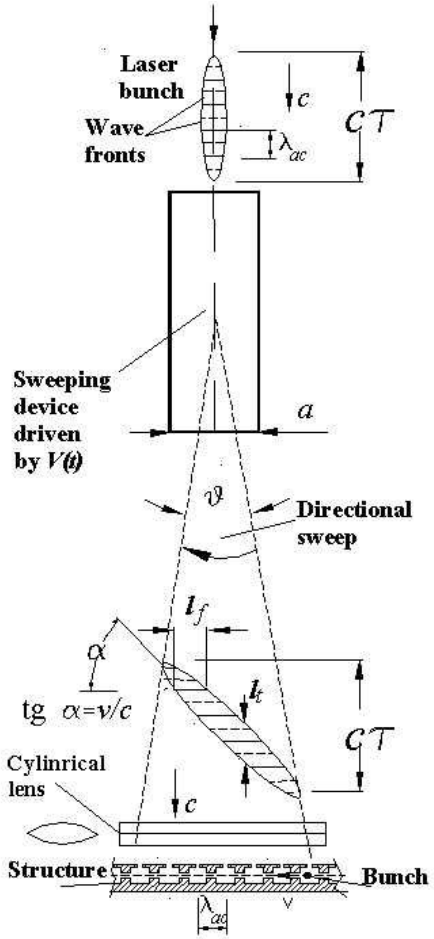

СОЮЗ СОВЕТСКИХ СОЦИАЛИСТИЧЕСКИХ РЕСПУБЛИК
ГОСУДАРСТВЕННЫЙ КОМИТЕТ ПО ИЗОБРЕТЕНИЯМ И ОТКРЫТИЯМ
ПРИ ГОСУДАРСТВЕННОМ КОМИТЕТЕ СССР ПО НАУКЕ И ТЕХНИКЕ
(ГОСКОМИЗОБРЕТЕНИЙ)

АВТОРСКОЕ СВИДЕТЕЛЬСТВО

№ 1609423

На основании полномочий, предоставленных Правительством СССР, Госкомизобретений выдал настоящее авторское свидетельство на изобретение:

"Способ ускорения заряженных частиц"

Автор (авторы): Михайличенко Александр Алексеевич

Заявитель: он же

Заявка № 4704750 Приоритет изобретения 10 мая 1989г.

Зарегистрировано в Государственном реестре изобретений СССР

22 июля 1990г.

Действие авторского свидетельства распространяется на всю территорию Союза ССР.

Председатель Комитета

Начальник отдела

Illumination time t=0.3ps . Laser density = 0.3 J/cm^2 for E=10GeV/m

SWEEPING DEVICE WITH ELECRO-OPTICAL PRISM

For a prism-based device, change in refraction index yields the change in deflection angle. To arrange such a change, the basements of the prism must be covered by metallic foils and a high voltage applied to them.

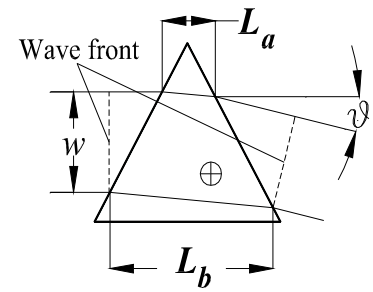

The deflecting angle is defined by the phase delay across the laser beam front arising from differences in the path lengths in material of the prism having a refractive index *n* ,

$$\Delta\vartheta \cong n\frac{(L_a - L_b)}{w}$$

At the right- prisms with *oppositely directed optical axes* installed in series between two parallel strip–line electrodes, Electromagnetic pulse propagates with laser bunch to the right as traveling wave.

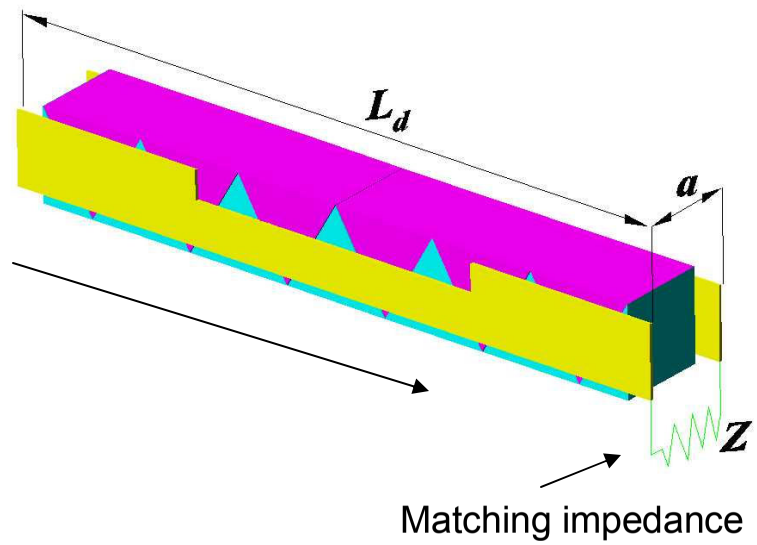

In this case the full length of this device is working for deflection.

Sweeping device could be characterized by deflection angle q and by the angle of natural diffraction –

$$q_d = l/a,$$

where *a* –is the aperture of the sweeping device which is o the order of the transverse laser beam size.

The ratio of deflection angle to diffraction angle is fundamental measure of the quality for any deflecting device. This ratio defines the *number of resolved spots (pixels)* placed along the structure. The last number is an invariant under optical transformations.

$$N_R = q/q_d$$

The deflection angle and the number of resolved spots for such device become

$$\Delta\vartheta \cong \Delta n(t)\frac{L_d}{w} \qquad N_R \cong \frac{|\Delta\vartheta|_{\max}}{\lambda / w}$$

Different voltage should be applied to head and tail of laser bunch

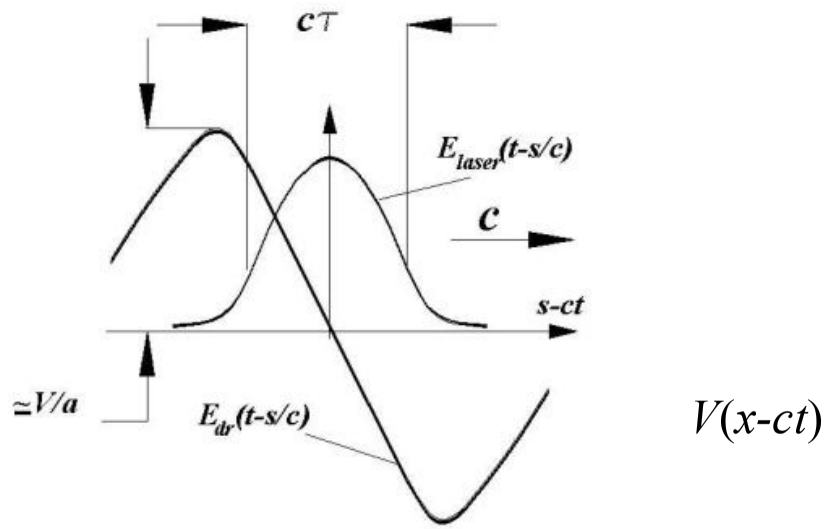

$V(x\text{-}ct)$

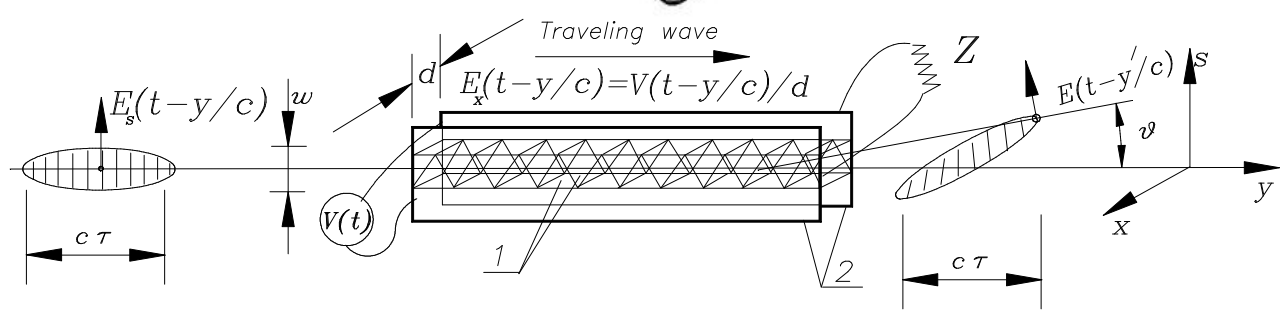

1-crystalls with oppositely oriented optical axes, 2-strip-line electrodes

Tensor r_{ij} links refraction index change and applied electrical field

$$1/n_i^2 = 1/n_{0i}^2 + \sum_j r_{ij} \cdot E^j$$

$$\Delta n_i \cong (\partial n_i / \partial E_j) E^j(t)$$

$$\partial n_i / \partial E_j = -n_{0i}^3 r_{ij} / 2$$

$$\begin{pmatrix} \Delta(1/n_1^2) \\ \Delta(1/n_2^2) \\ \Delta(1/n_3^2) \\ \Delta(1/n_4^2) \\ \Delta(1/n_5^2) \\ \Delta(1/n_6^2) \end{pmatrix} = \begin{pmatrix} r_{11} & r_{12} & r_{13} \\ r_{21} & r_{22} & r_{23} \\ r_{31} & r_{32} & r_{33} \\ r_{41} & r_{42} & r_{43} \\ r_{51} & r_{52} & r_{53} \\ r_{61} & r_{62} & r_{63} \end{pmatrix} \times \begin{pmatrix} E_x \\ E_y \\ E_s \end{pmatrix}$$

GaAs

$$(r)_{ij} = \begin{pmatrix} 0 & 0 & 0 \\ 0 & 0 & 0 \\ 0 & 0 & 0 \\ 1.5 & 0 & 0 \\ 0 & 1.5 & 0 \\ 0 & 0 & 1.5 \end{pmatrix} \times 10^{-12} [m/V]$$

KDP

$$(r)_{ij} = \begin{pmatrix} 0 & 0 & 0 \\ 0 & 0 & 0 \\ 0 & 0 & 0 \\ 8.8 & 0 & 0 \\ 0 & 8.8 & 0 \\ 0 & 0 & 10.5 \end{pmatrix} \times 10^{-12} [m/V]$$

$$\Delta\vartheta \cong \Delta n(t) \frac{L_d}{w} \cong \frac{L_d}{a^2} n_0^3 \cdot r_{ij} \cdot V(t)$$

V(t) from previous slide

$$N_R \cong \frac{|\Delta\vartheta|_{\max}}{\lambda / w} = |\Delta n|_{\max} \frac{2L_d}{\lambda} = \frac{L_d}{\lambda} n_0^3 r_{ij} |\Delta V|_{\max}$$

For L_d =25*cm*, a=0.5 *cm*, deflection angle is $\Delta\vartheta \cong 10^{-2}$
N_R= *200* for $\lambda \cong 1\mu m$

Materials for 1um: KDP,DKDP,ADP,KDA,$LINbO_3$

Materials for 5um: $LiNbO_3$, $LiTaO_3$, CuCl

Materials for 10um: GaAs, ZnTe, ZnS,CdS, CuCl

Such devices can be manufactured routinely

Electro-optical materials for deflector

Wavelength	Materials	ϑ, *rad*	N_R
$\lambda \cong 10\mu m$	*GaAs, ZnTe, ZnS, CdS, CdTe, CuCl*	0.01-0.02	20
$\lambda \cong 5\mu m$	$LiNbO_3$, $LiTaO_3$, *CuCl*	0.01-0.02	40
$\lambda \cong 1\mu m$	*KDP, DKDP, ADP, KDA,* $LiNbO_3$	0.01-0.02	200

Despite the materials transparent for longer wavelengths have lower value of r_{ij}– components, they have higher values of refracting index, so the variation of refractive index becomes about the same.

PULSE GENERATOR

The pulser we developed and suggesting for usage at ERL and ILC

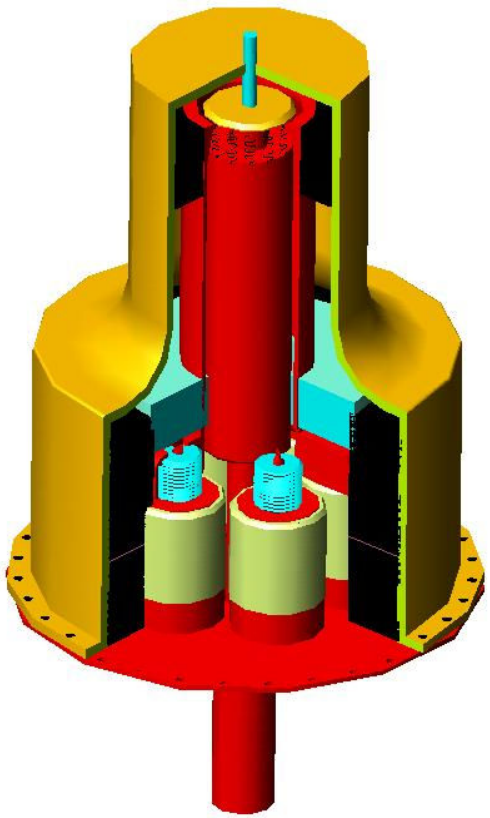

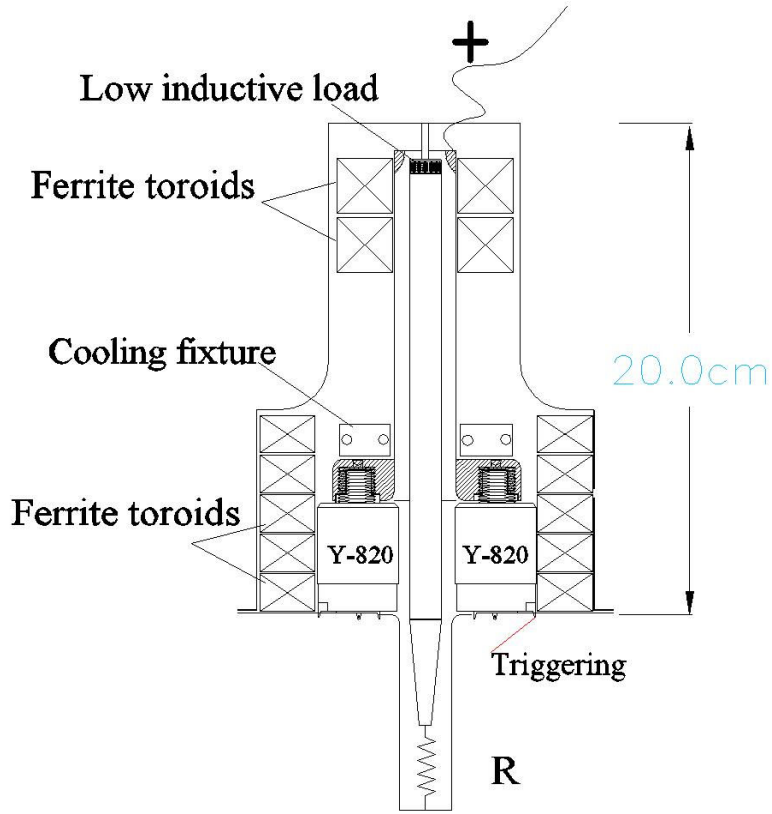

Scheme recommended able to generate ~30kV, 120A in ~1ns pulse.

This device with minimal modifications could made for 5 nsec pulse duty with front/back< 0.5 nsec.

This is HV scheme with few vacuum tubes in parallel

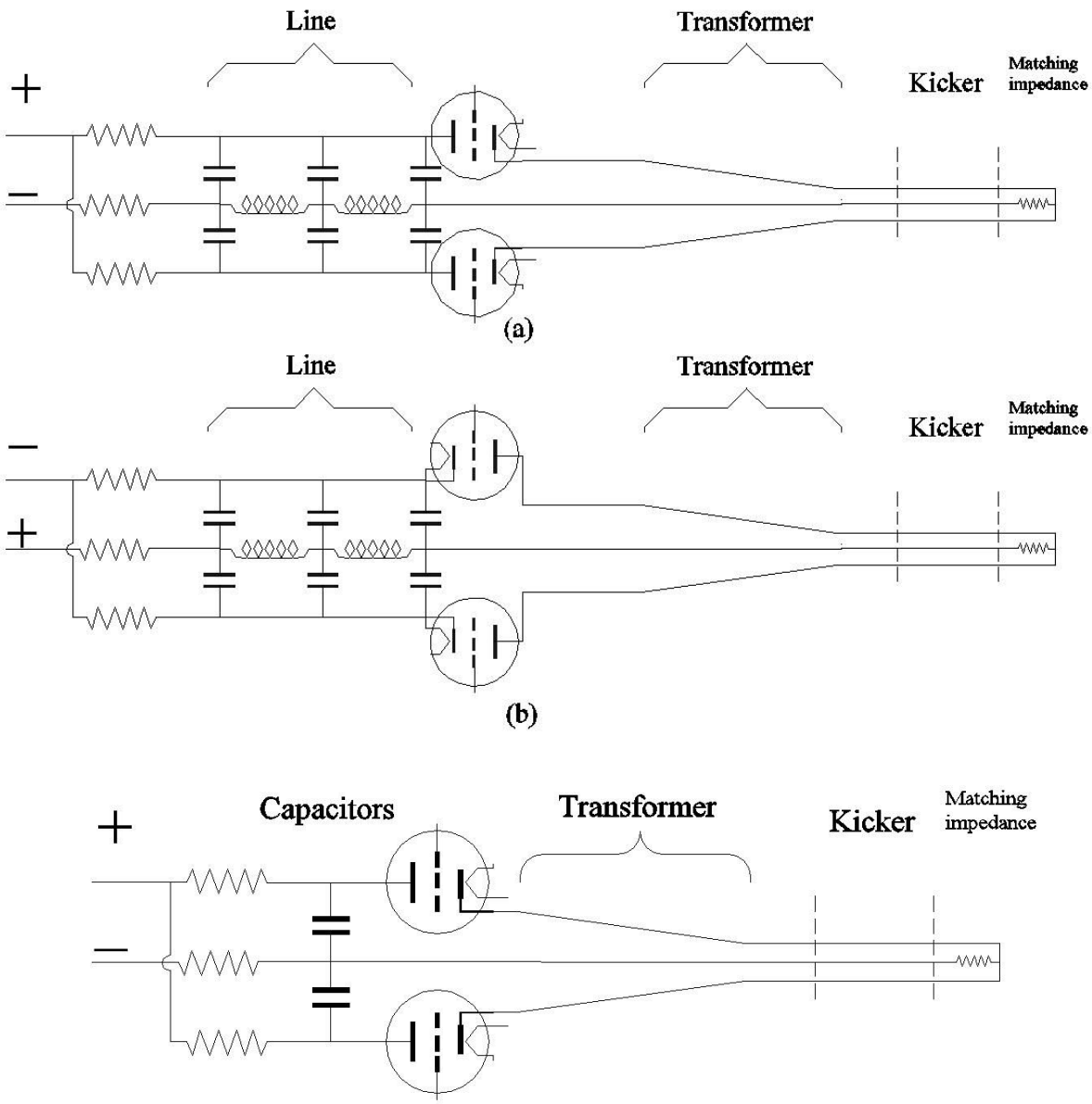

For commutation with vacuum tube HV RF capacitor is possible

TRIGGERING HV PULSE GENERATOR WITH DIODE

Now it is a turn for DSRD (Drift Step Recovery Diodes)

V.M.Efanov, A.F.Kardo-Sysoev, M.A.Larionov, I.G.Tchashnikov, P.M.Yarin, A.V.Kriklenko, "*Powerful Semiconductor 80 kV Nanosecond Pulser*", IEEE 0-78-4214-3 (1997), pp.985-987.

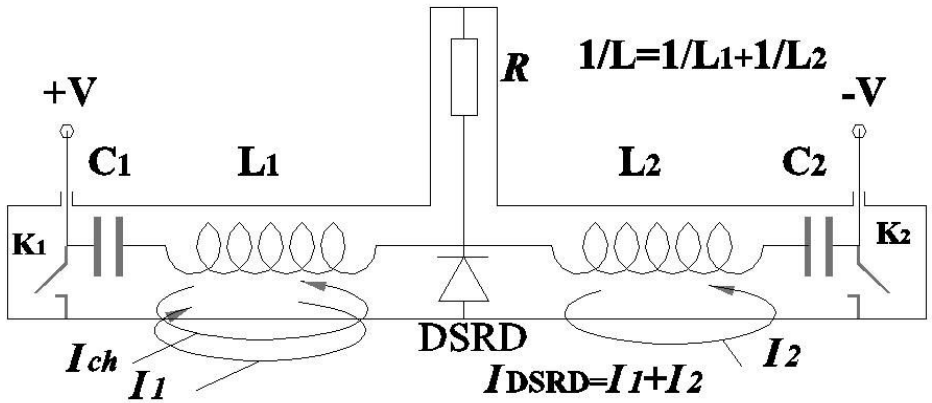

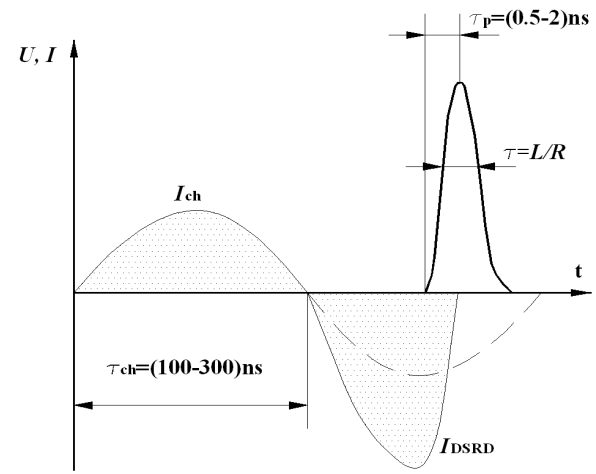

Principle of operation of triggering system with DSRD diodes

First, key K1 is closed and the capacitor C1 discharged through inductance and DSRD. After half period of discharge the key K2 closed and discharge current trough C2 and L2 add to the current of first loop. So the current, which is reversed to normal direction of DSRD is ~doubled, which makes ~twice faster charge dissolution from the body of diode and the current interrupts faster, see Fig at right. The time of pulse existence is defined by ratio L/R.

One practical scheme

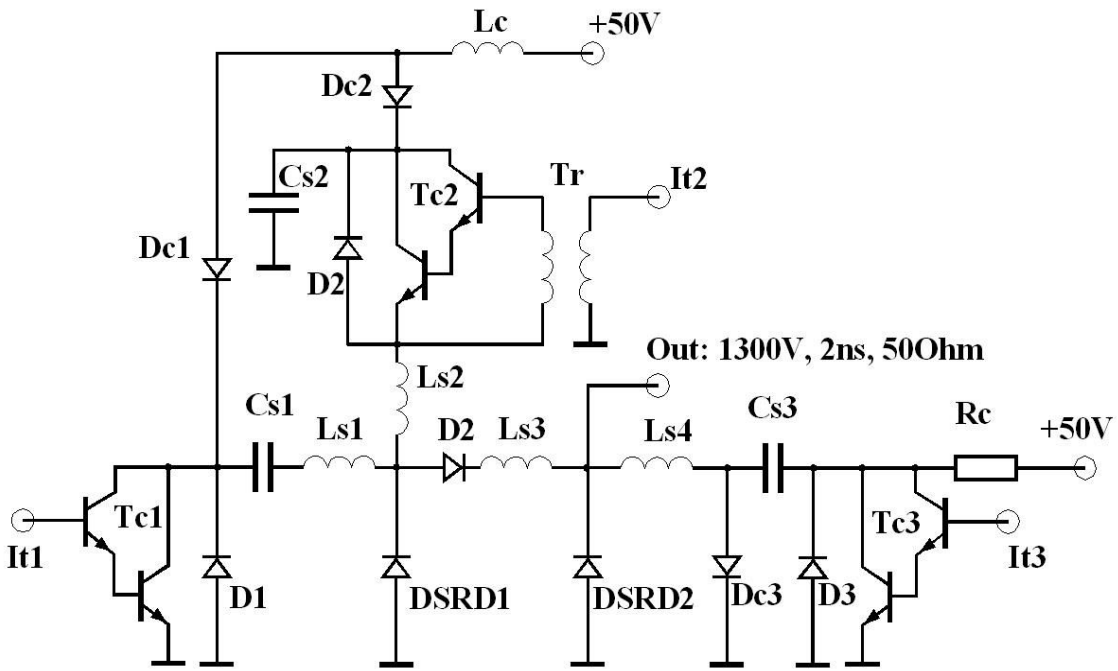

Ls1=Ls2=Ls3=0.5mkH Ls4=2.5mkH Cs1=Cs2=0.1mkF Cs3=0.015mkF

Lc=5mkH Rc=100Ohm Dc1,Dc2,Dc3-KD213 D1,D2,D3-KC620 Tc1,Tc2,Tc3-KT915

V.M.Turkevich, I.V.Grekhov, "*New Principles of High Power Commutation with Semiconductors*", Leningrad, Science Pub., ISBN 5-02-024559-3, 1988 (in Russian).

This is enough for triggering pulser with vacuum tubes

Schemes with DSRD exist which are able to generate up to 50kV

OPTICAL TRIGGERING

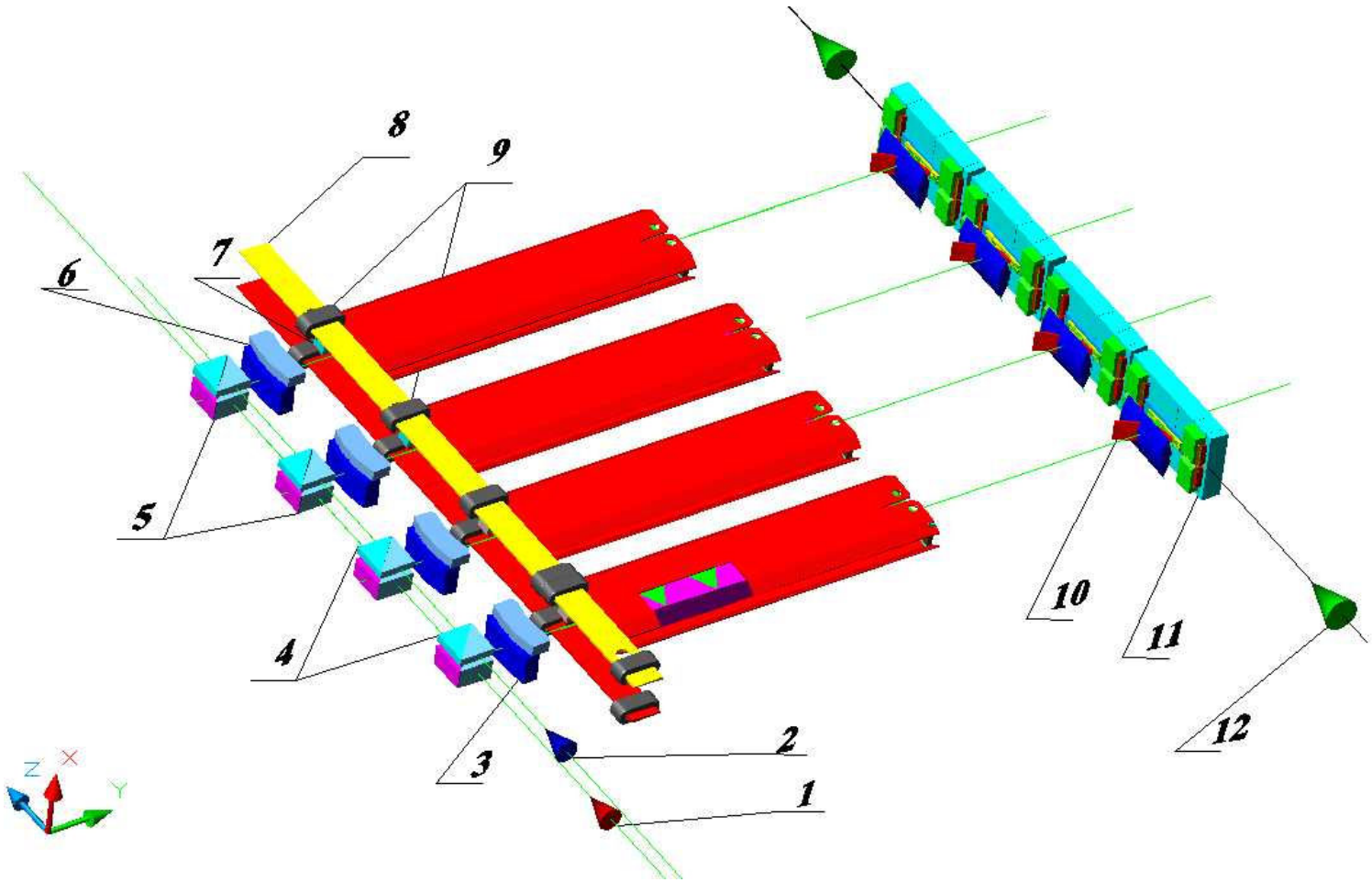

1– for main accelerating pulse and by 2 – for the triggering pulse . Lenses 3 focus main laser pulse on accelerating structure plane (marked 11) and short focusing lenses 6 focus laser pulse onto triggering element 7. 4 and 5-splitters. 8-energy storage lines; 9- inductors. The strip-line, marked red feeds by this piece of line. By 10, 11 and 12 the laser bunch configuration, accelerating structure module and accelerating bunch trajectory marked respectively.

Sweeping EM wave is broadly in use in radars

$$\vec{H}(\vec{r},t) = -\frac{ike^{i\omega t+\psi}}{4\pi}\left[\vec{n}_R \times \vec{F} - \vec{n}_R \times (\vec{n}_R \times \vec{F}')\right] \qquad \vec{E}(\vec{r},t) = \frac{ike^{i\omega t+\psi}}{4\pi}\left[\vec{n}_R \times (\vec{n}_R \times \vec{F}') + \vec{n}_R \times \vec{F}'\right]$$

$$\vec{F}(\vec{r},t) = \int_S \frac{(\vec{H}(x,y,t)\times \vec{n}_R))e^{i\vec{k}\vec{r}}}{r} d\sigma \qquad \vec{F}'(\vec{r},t) = -\int_S \frac{(\vec{E}'(x,y,t)\times \vec{n}_R))e^{i\vec{k}\vec{r}}}{r} d\sigma$$

Jakson, *Classical Electrodynamics,* third edition, 1998.

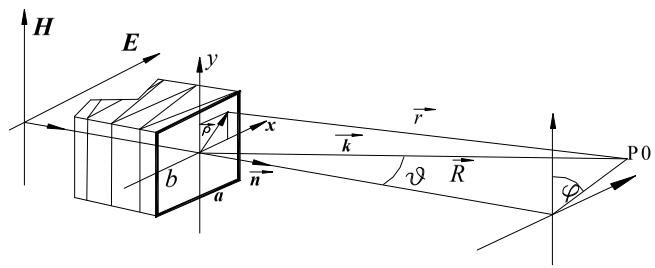

$$H_y(t) = -\frac{ik}{2\pi}\frac{\exp(ikR)}{R}\int_{-b/2}^{+b/2}\int_{-a/2}^{a/2} H_y(x,y)e^{ikSin\,\vartheta(xCos\,\varphi + ySin\,\varphi)}e^{-i\chi(x,y)}dxdy \qquad \chi(x,y) = \delta(t)\cdot x$$

$$H(t) = -\frac{ikH_0}{2\pi}\frac{\exp(ikR)ab}{2R}e^{i\omega t+\psi}\int_{-1}^{+1} e^{i(\alpha_1-\delta)\xi}d\xi = -\frac{ikH_0}{2\pi}\frac{\exp(ikR)ab}{R}e^{i\omega t+\psi}\frac{Sin(\alpha_1-\delta)}{\alpha_1-\delta}$$

$$\chi(x,y) = \delta\cdot x + \kappa x^2$$

Frensel integrals

$$H(t) = -\frac{ikH_0}{2\pi}\frac{\exp(ikR)ab}{2R}\frac{e^{i\omega t+\psi-iA^2/2B}}{\sqrt{B}}\int_{-u}^{v} e^{-i\varsigma^2}d\varsigma \qquad \int_{-u}^{v} e^{-i\varsigma^2}d\varsigma = -\int_0^u e^{-i\varsigma^2}d\varsigma + \int_0^v e^{-i\varsigma^2}d\varsigma = \sqrt{\frac{\pi}{2}}[C(u)+C(v)-iS(u)-iS(v)]$$

$$u = \frac{\frac{1}{2}\cdot kaSin\vartheta - \delta(t) + \kappa a^2/4}{a\sqrt{\kappa}} \qquad v = \frac{-\frac{1}{2}\cdot kaSin\vartheta + \delta(t) + \kappa a^2/4}{a\sqrt{\kappa}}$$

ACCELERATING COMPLEX SCHEME

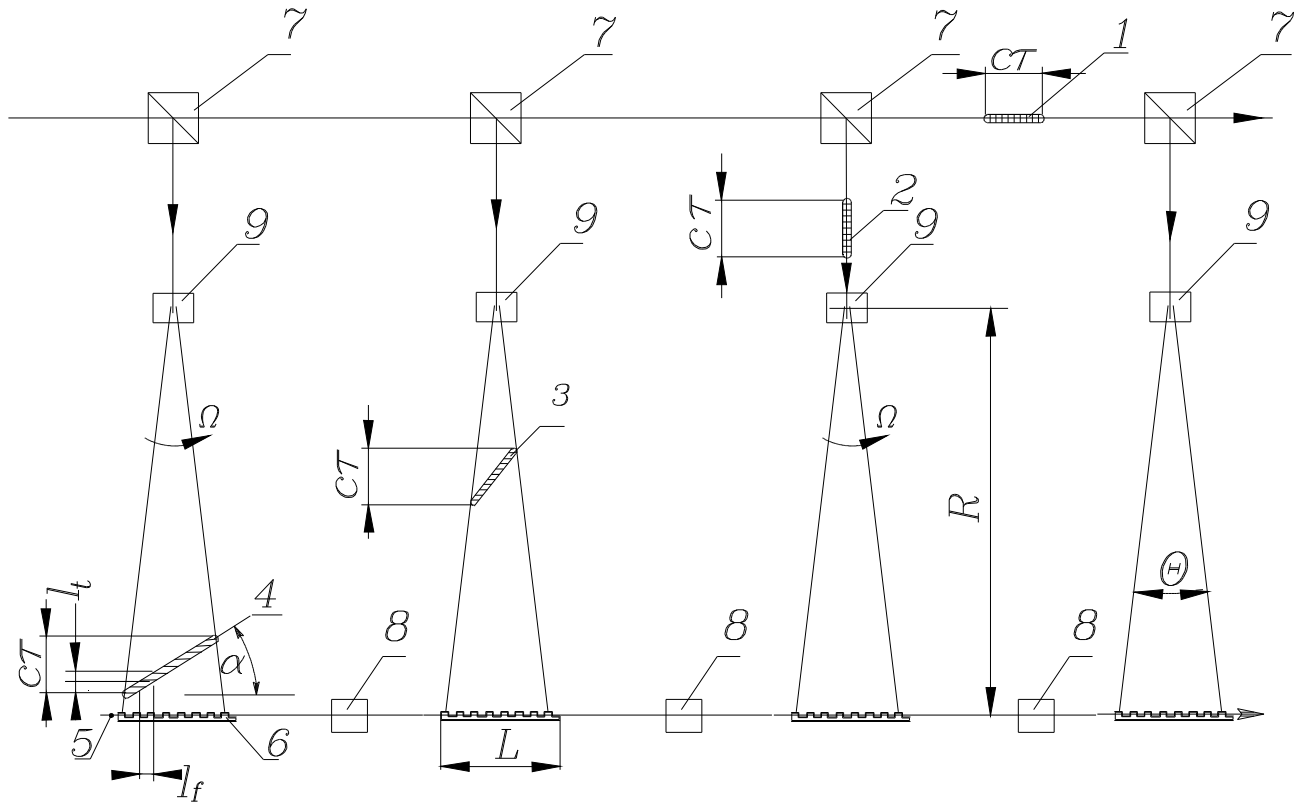

1–4–are the instant laser bunch positions; 1–is a primary laser bunch which is moving from the left side on the picture to the right. 5– is the beam of accelerated particles. 6–is the accelerating structure. 7–are the optical splitters. 8–are the particles' beam focusing elements (in additional to RF focusing). 9–are the sweeping devices. The distances between the structures are increased for better view.

Sweeping device serves for few accelerating structures.

Laser bunch train, 1 coming from the left and passing sequentially power splitters 3. By 2 marked locations and configuration of the swept laser bunches. Lenses 4 installed a prior to the sweeping devices 5 having focal plane at location of lens 6. By 7 marked power splitters and mirrors allowing feed few structures from single sweeping device. Even number of reflections (basically two), bring the slope to the proper tilt shown by 8. This system also equipped by cylindrical lenses 9 which have transverse focus on the openings of accelerating structures. Structures marked by 10. Accelerated bunches are running to the right 11 inside structures.

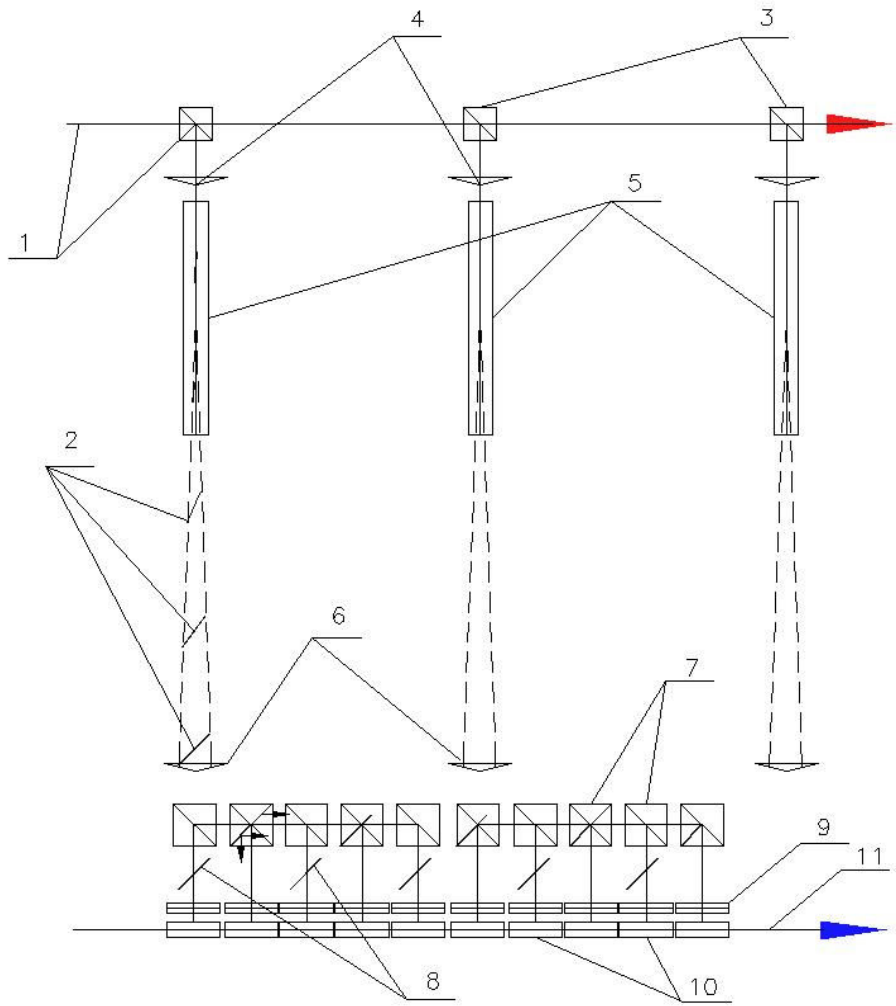

We expect that this can be done for 5-10 structures.

PECULIARITY IN REFLECTION OF SLOPED LASER BUNCH FROM 45° MIRROR

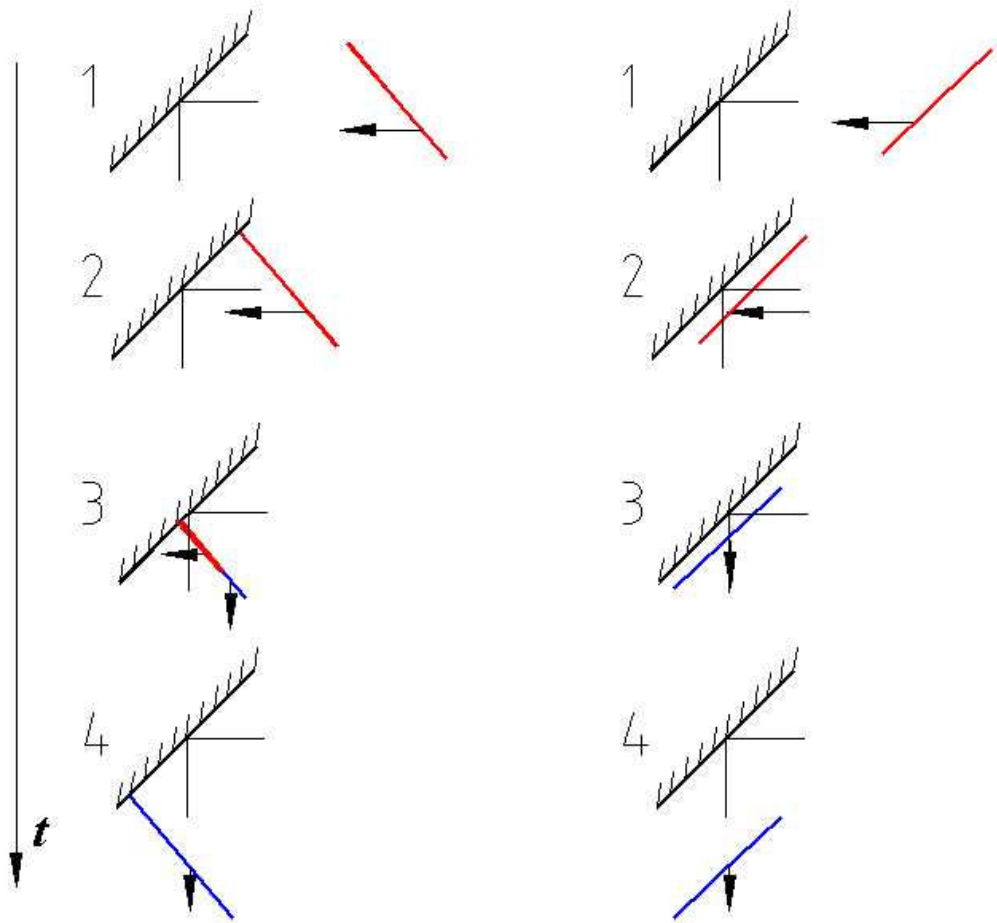

GENERATION OF TILTED LASER BUNCH WITH GRATING

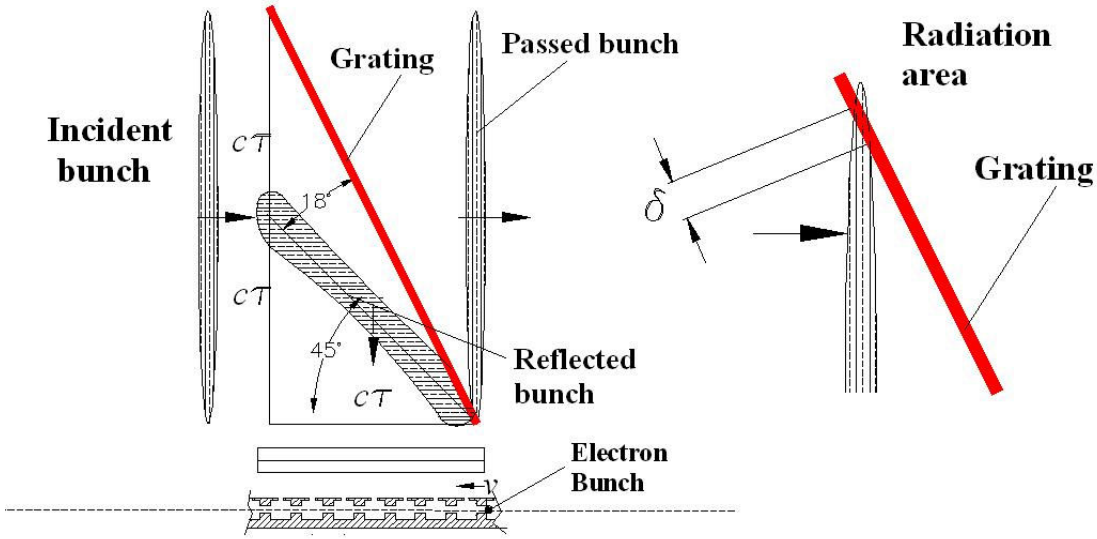

B.Ya.Zel'dovich, N.D. Kudnikova, F.V.Podgornov, L.F.Rogacheva, Quantum Electronics **26**(12) 1097-1099 (1996).
I.V. Pogorelsky *et al.*, Advanced Accelerator Concepts Workshop, 12-18 October 1996, Granlibakken, Lake Tahoe, CA, AIP 398 Proceedings, p.930.

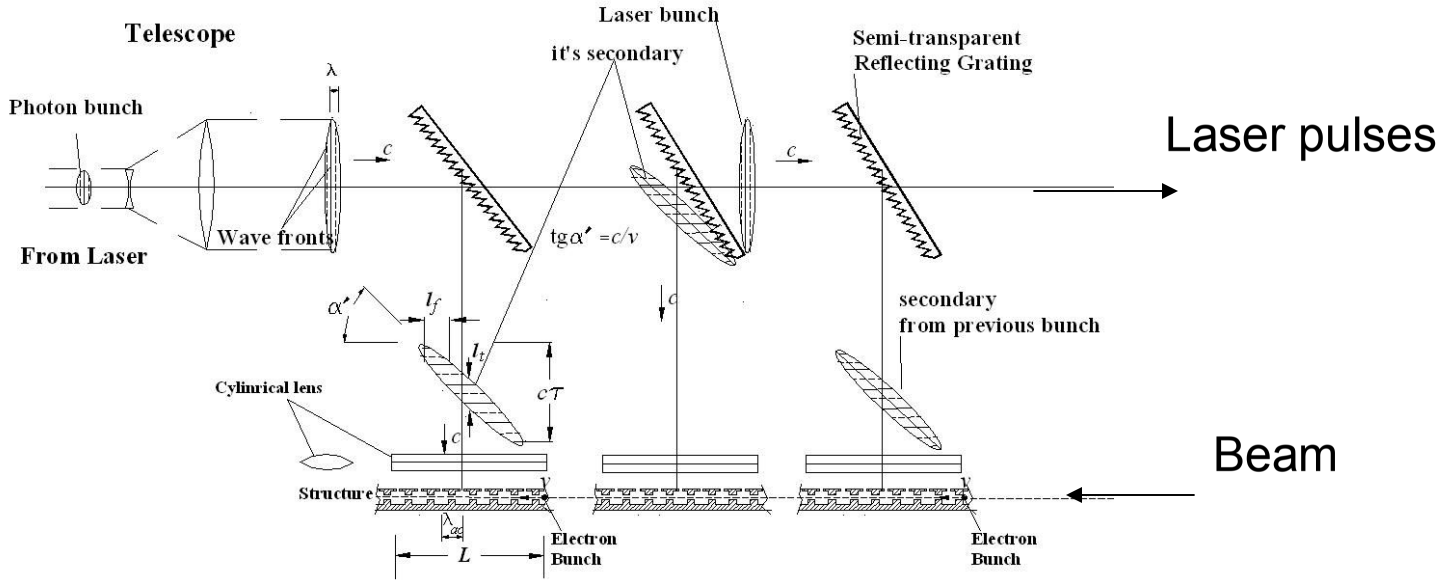

Possible set up with semi-transparent gratings

Comparison between sweeping and grating method

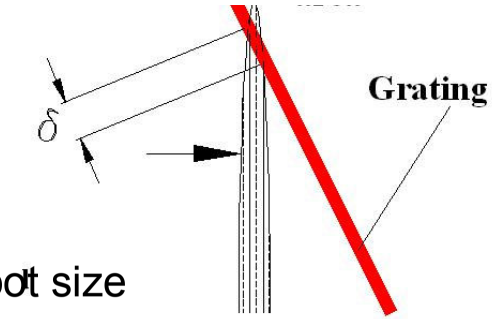

Diffraction angle in case of grating $\vartheta_d^g \cong \sqrt{\lambda / \delta}$

For comparison with sweeping device $\delta \approx l_f \cong l_t$ -spot size

For the sweeping device we have $l_t \cong L / N_R \cong a / N_R$

So for comparison of these two schemes, we represent the diffraction angle as

$$\vartheta_d^g \cong \sqrt{\lambda N_R / a}$$

The ratio of diffraction angles in these two methods goes to be

$$\vartheta_d^g / \vartheta_d^s \cong \sqrt{\lambda_{ac} N_R / a} / (\lambda_{ac} / a) \cong \sqrt{N_R a / \lambda_{ac}}$$

With some optimization of grating profile this could be improved, probably, to

$$\vartheta_d^g / \vartheta_d^s \cong N_R$$

at the best. So the advantage of using the sweeping device is obvious-it gives much smaller laser spot size in longitudinal direction.

The difference is ~100 times minimum in favor of the sweeping device.

DYNAMICS OF SWEEPING

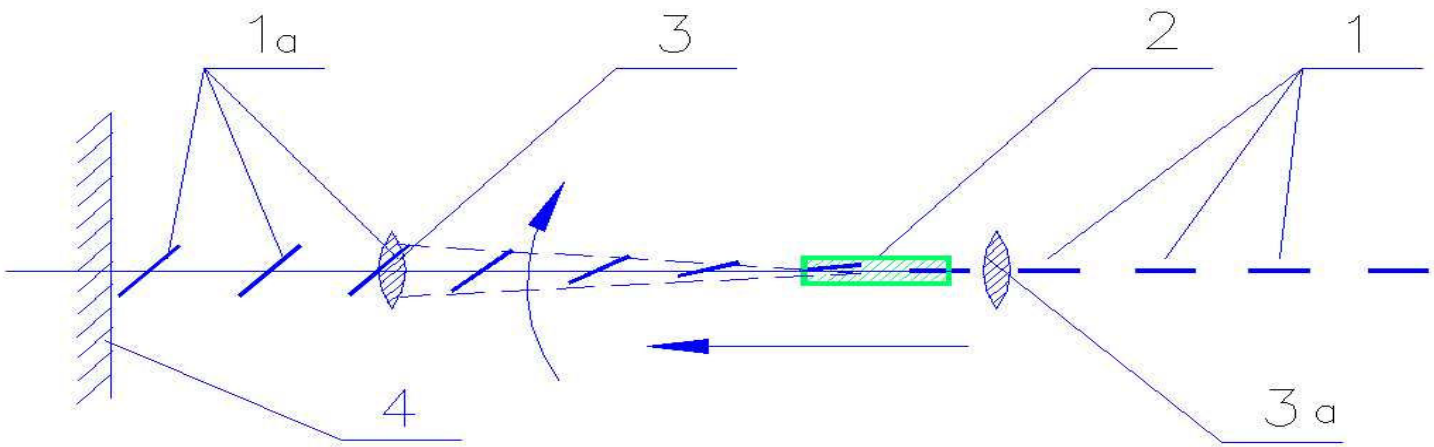

Dynamics of laser bunch sweeping; a look from the side. 1–shows laser bunch configuration at the entrance, 1a– is a bunch after second lens, 2–is a sweeping device, 3 and 3a– are the focusing lenses. 4 –is an image plane, where accelerating structure located. Beam is moving from the bottom of this Fig. to the top.

Additional lens 3 has a focal point located in effective sweeping center. After this lens laser bunches have no angular divergence. Lens 3a has focal point located at the accelerating structure, what is the plane marked 4. So the sweeping device 2 located between lenses 3a and 3.

Direction of sweep defines the laser bunch slope. For practical applications second lens 3 can be combined with cylindrical lens.

Optimization of sweeping device shows, that its length must be 2/3 of distance from lens 3a to the lens 3,

ARRANGEMENT OF LONG TERM ACCELERATION

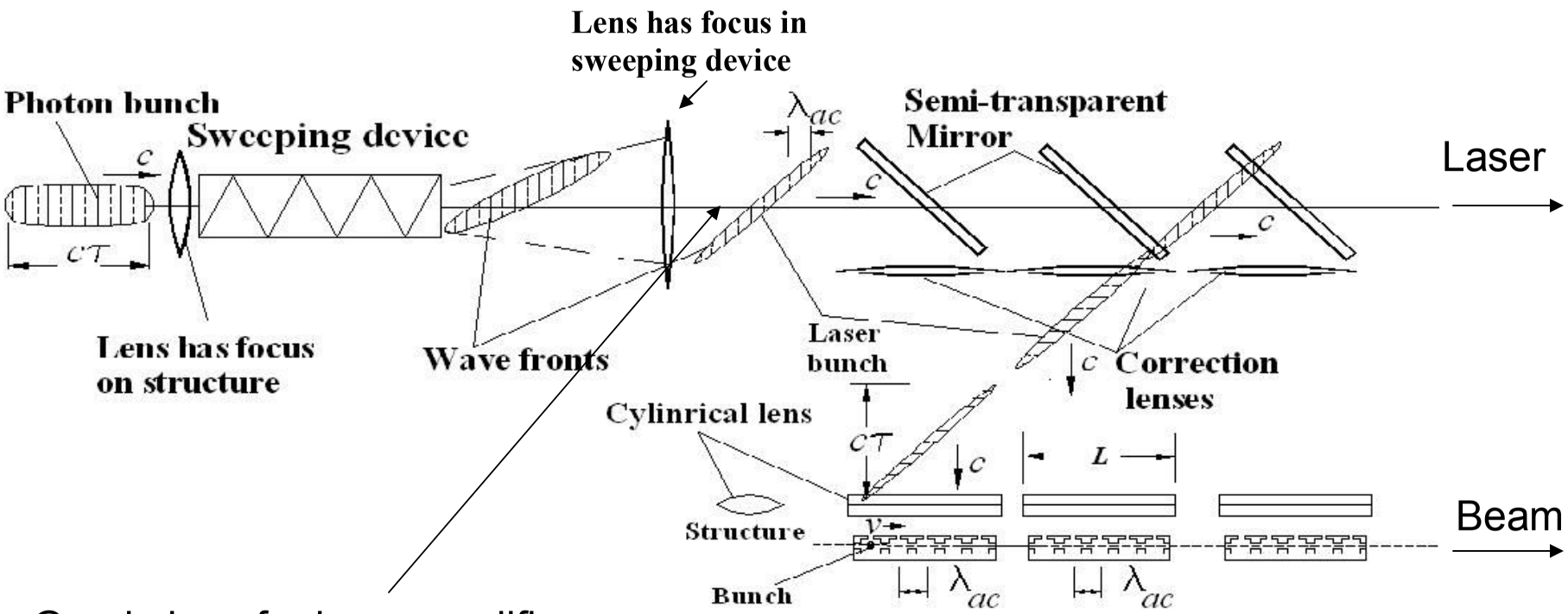

Good place for laser amplifier

3D VIEW OF PROCESS

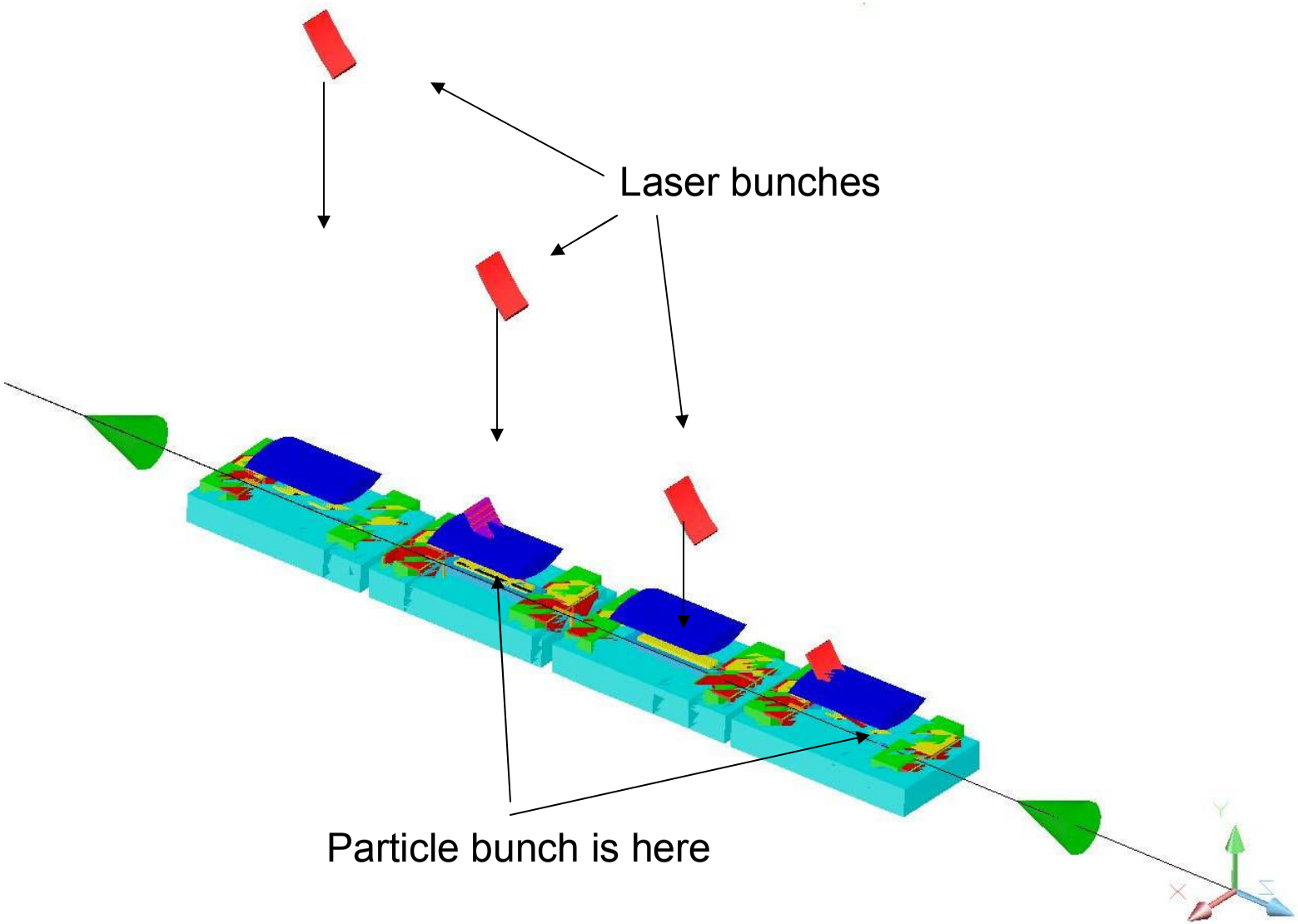

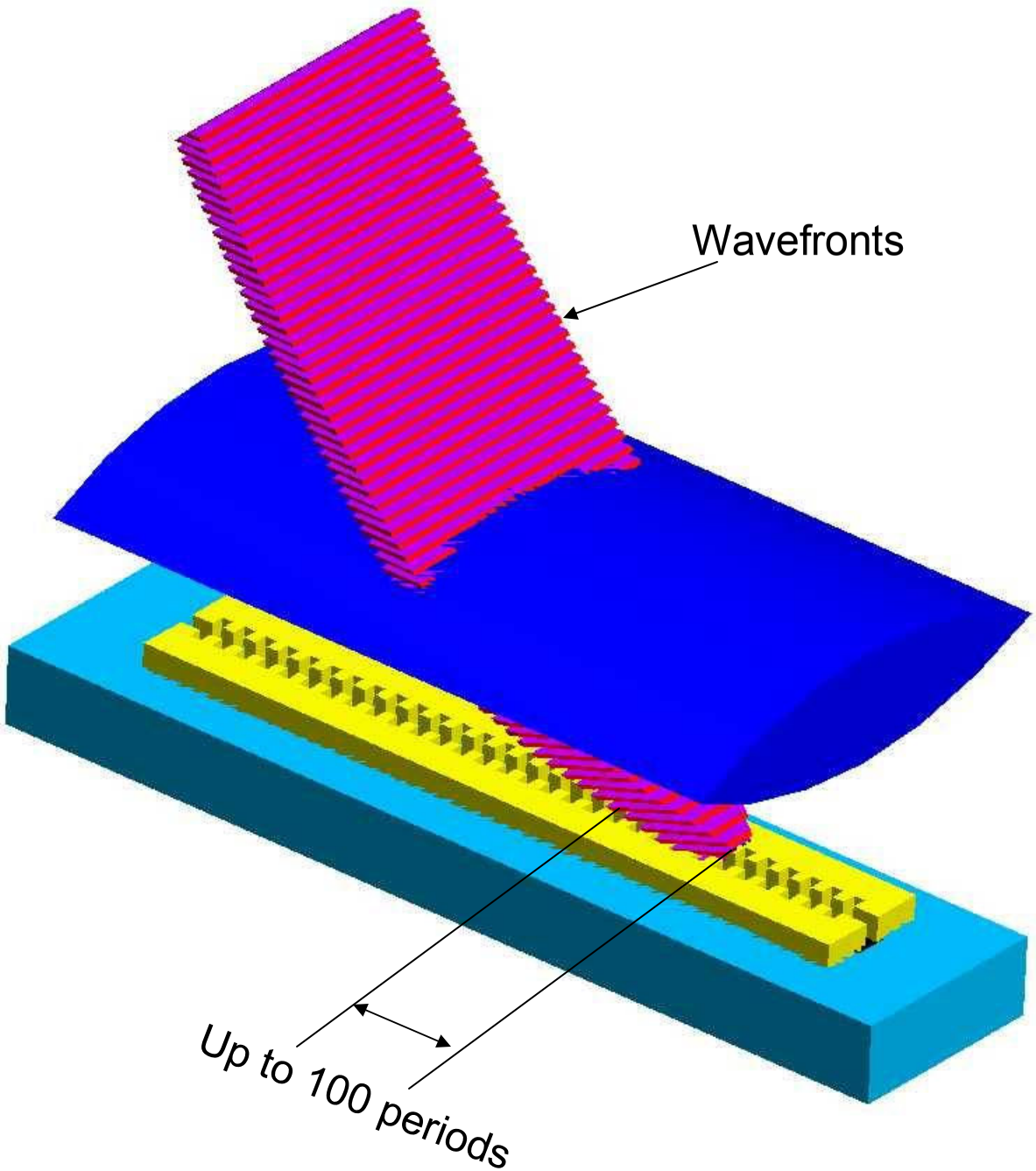

We keep quality factor ~10 artificially

So the field inside each cell could reach equilibrium

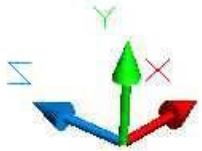

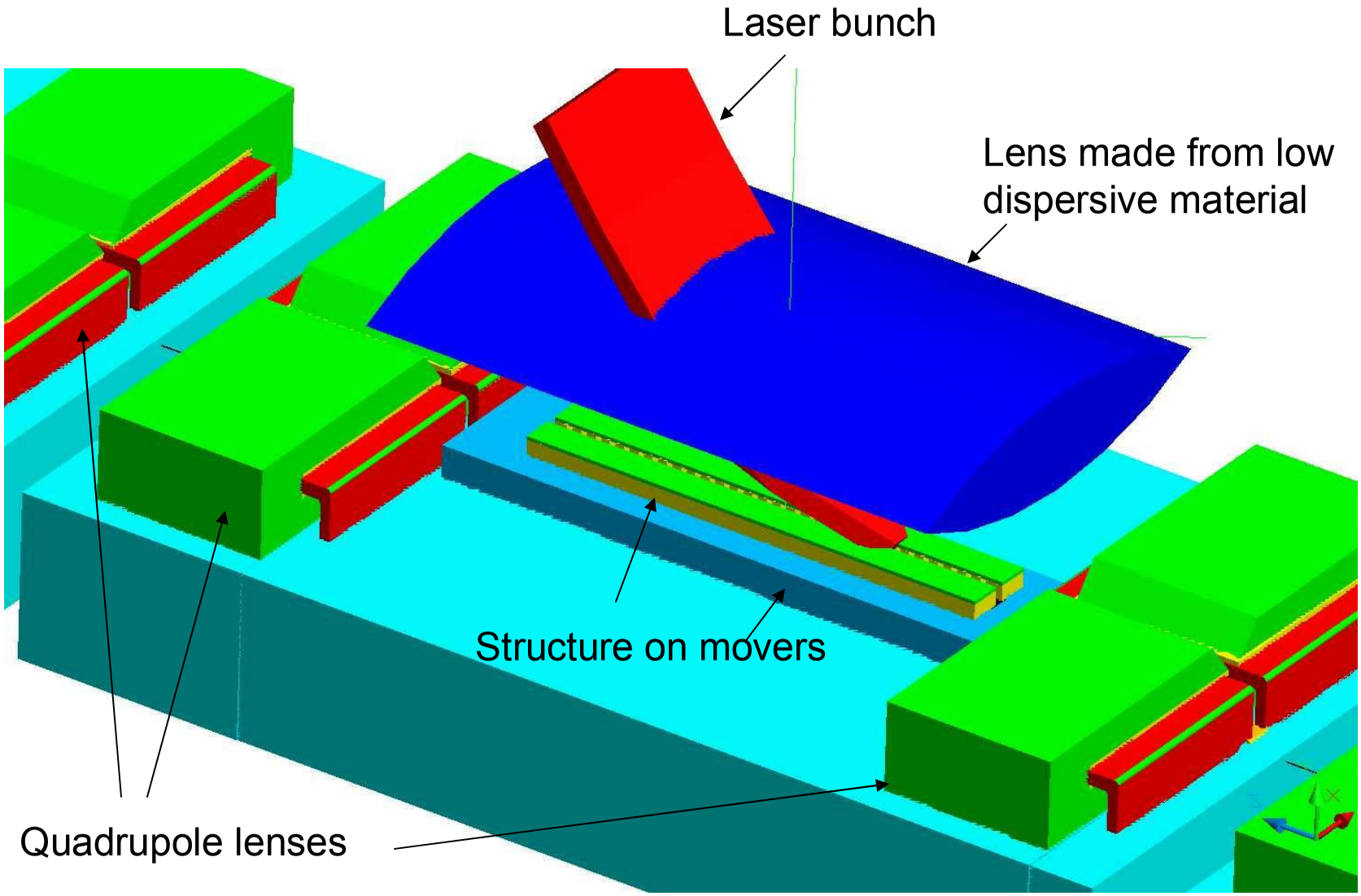
Laser bunch
Lens made from low dispersive material
Structure on movers
Quadrupole lenses

QUADRUPOLE

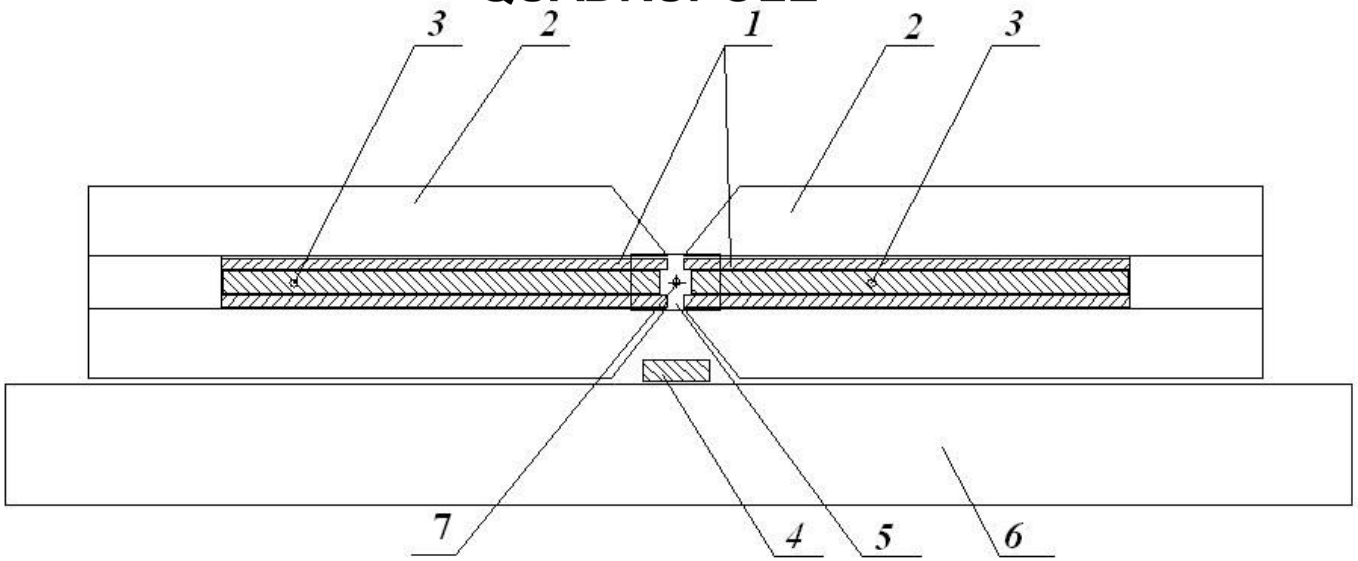

Quadrupole cross-section. Longitudinal dimension (perpendicular to the plane of drawing) is about 0.5 *cm*. Accelerating bunch is moving perpendicular to the plane of the drawing. 1–is an iron blades-like looking poles, 2–is a yoke, 3–is a current strips, 4–is a current strip for vertical axes trim, 5–is a profile of the accelerating structure, 6–is a base, 7–is a cross-section of the accelerating bunch.

For pole tip field strength H=10 kG, aperture a=0.01mm, gradient

$$G=H/a\sim 1.0\text{x}10^4\ kG/cm \equiv 10\ MG/cm$$

Waveguide sweeping device

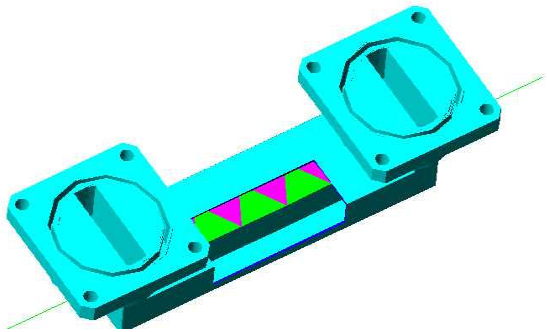

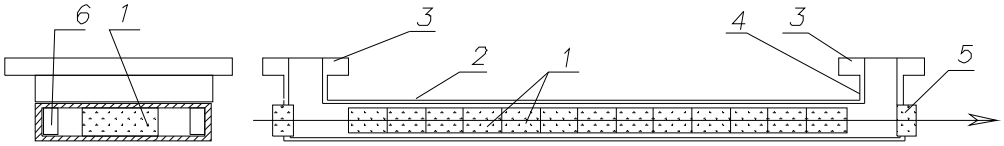

Multi-prism traveling wave sweeping device in a waveguide. 1–is electro-optical crystals, positioned in a waveguide 2, having bends 4 with flanges 3. 5–is an optical window. 6 –is a matching dielectric.

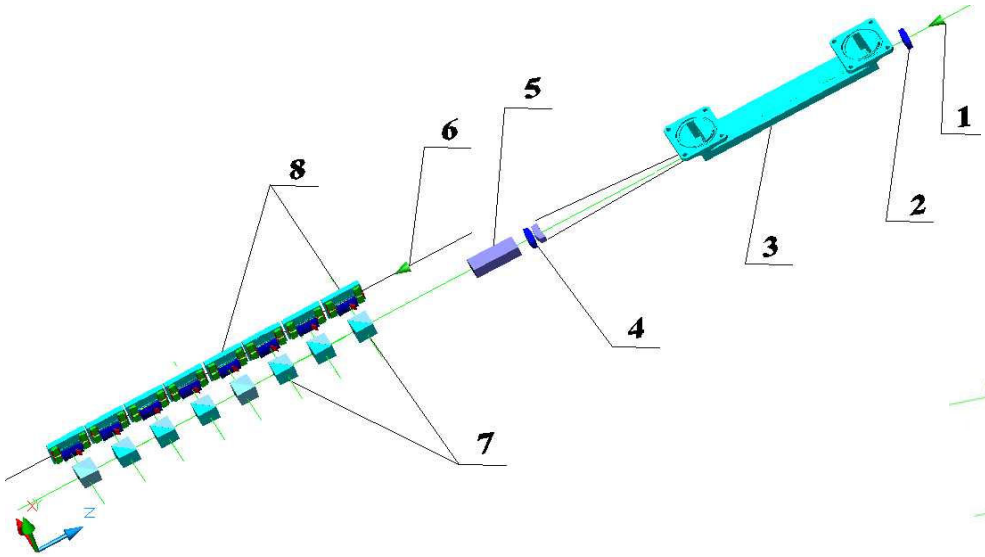

1 –is the laser beam, 2–focusing lens, 3–waveguide sweeping device, 4–lens, 5–optical amplifier, 6–particle beam under acceleration, 7–laser power splitting devices, 8–accelerating structures with beam focusing elements.

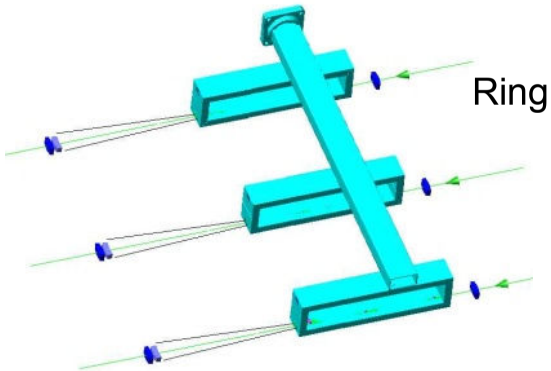

Ring type resonant loops

Power requred ~1 MW , losses are minimal

Installation of optical amplifiers **after** sweeping device increases the volume of active media involved in process

This also reduces heating of sweeping device and reduces nonlinear effects

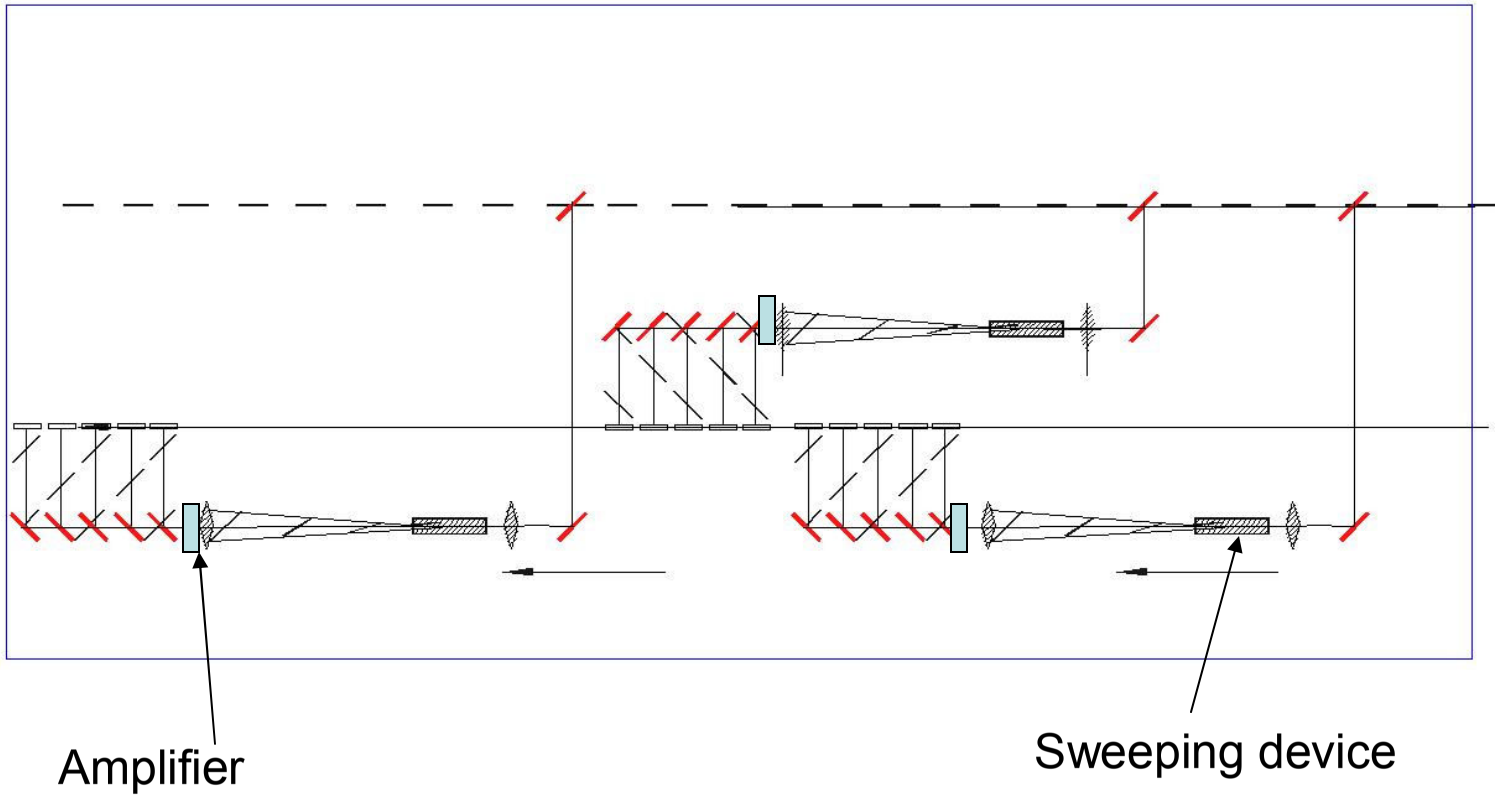

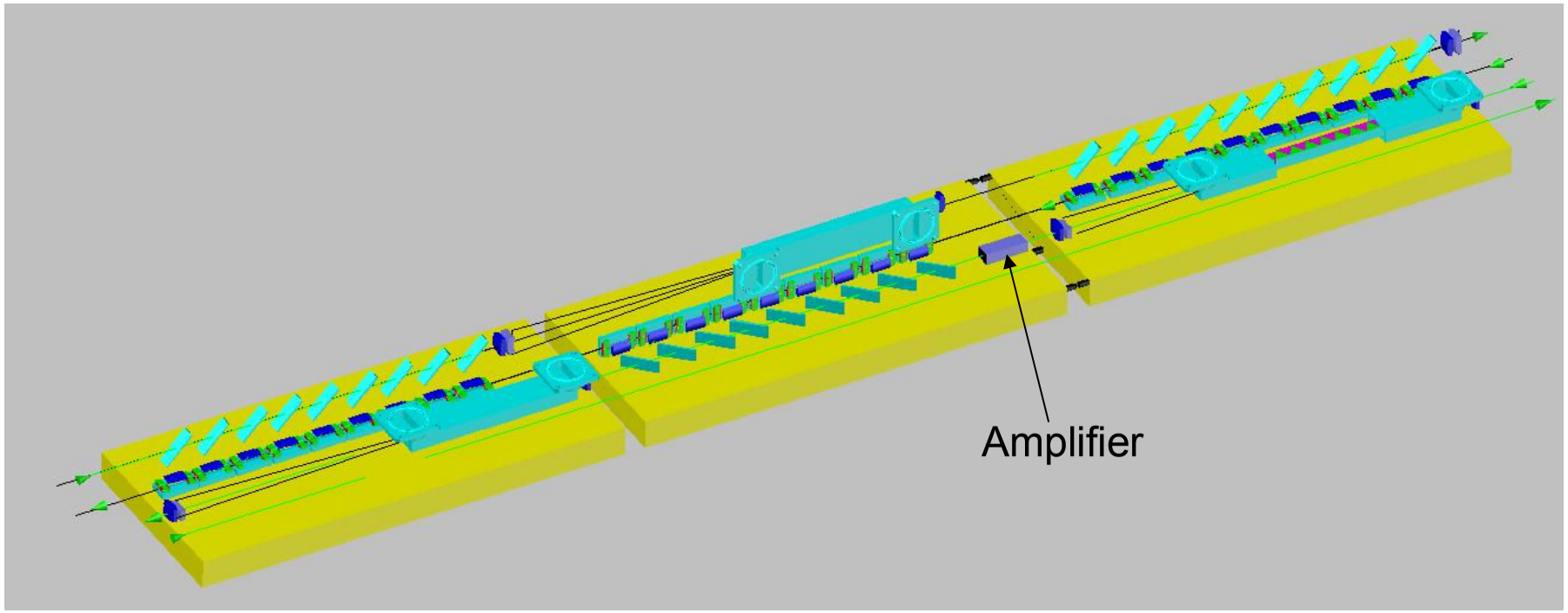

3D view of accelerating modules

Mechanical sweeping devices

V.J.Fowler, J.Schlafer, *A Survey of Laser Beam Deflection Techniques,* Applied Optics, Vol.5, N10, 1657(1966).

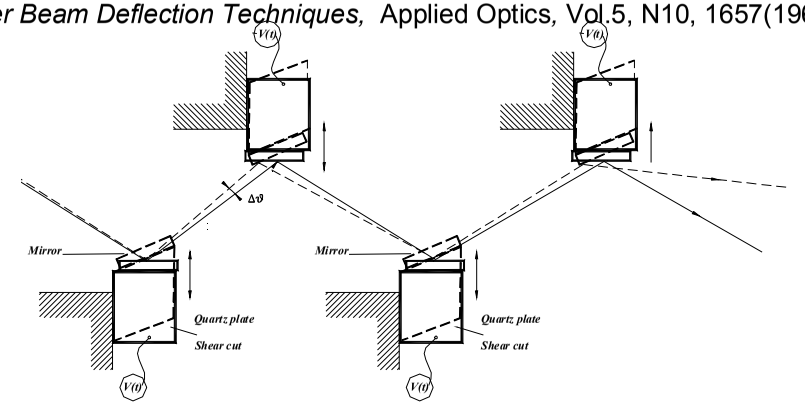

Deflection arrangements with quartz plate shear cut. This cut done with angle~55° to the Y- axis of the quartz crystal. Metallization applied to the front and opposite sides of the crystal. Tilt angle shown is not in scale .

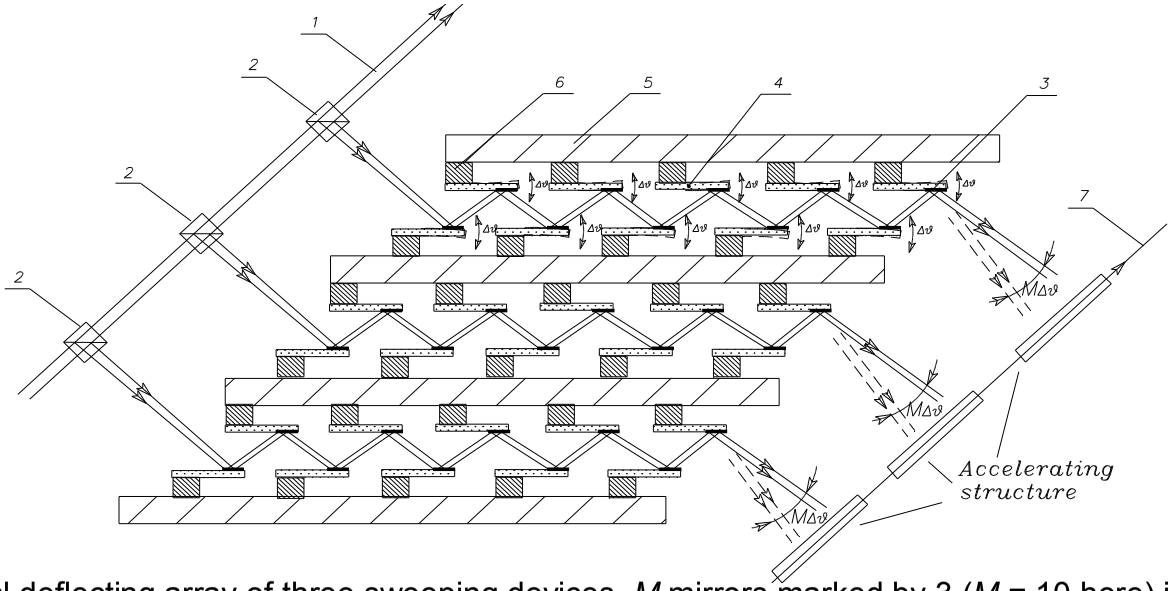

Ten stage mechanical deflecting array of three sweeping devices. *M* mirrors marked by 3 (*M* = 10 here) installed on the quartz crystals 4. 1–is a primary laser beam, 7 –is a trajectory of a particle's beam. Crystal's oscillations phased for a maximal deflecting angle. Resulting deflecting angle is *M* times bigger than with a single mirror. The system shown could feed three accelerating structures.

ACCELERATING STRUCTURE

Accelerating structure is a vital component of any accelerator. It serves as a housing for accelerating field.

The mostly important role of the structure is, however, in proper *positioning* of accelerating field in space.

Many projects on laser acceleration suffer from sensitivity to fluctuations in laser homogeneity.

This is especially so in some schemes used split lasers beam and combined further to obtain symmetrically crossed wave fronts. In its turn precise location defined by accuracy of fabrication, accuracy of positioning, how far from equilibrium the fields are and by physical limitations.

The coupled electrons having frequencies much higher, than the laser one, define the effective boundaries of the structure for nonconductive materials.

Positioning of EM wave center

Accuracy due to electron plasma in a metal is ~ r_D / λ , where Debye radius r_D defined as

$$r_D = \frac{v_p}{\omega_p} \cong \frac{\sqrt{k_B T / m}}{\omega_p} = \sqrt{\frac{k_B T}{4\pi n e^2}}$$

$k_B \cong 1.38 \cdot 10^{-23}$ J/°K –is Boltzmann's constant, T –is electron temperature, n –is an electron density in a metal,

r_0 –is a classical electron radius. Formally, as $\omega_p \cong 10^{16} 1/s$ $v_p \cong 10^8 cm/s$ $r_D \cong 10^{-8} cm$

and the ratio for 1 mkm wavelength comes to $r_D / \lambda \cong 10^{-4}$

In diluted plasma with density ~10^{-6} of density in metal, the last ratio becomes $r_D / \lambda \cong 10^{-1}$ only.

In general, the plasma methods must experience problems with fluctuations of the number of electrons in Debye sphere.

This makes stable acceleration in plasma not possible.

Any type of structure could be used with TLF method

R.C.Fernow, J.Claus, *The Foxhole Accelerating Structure*, BNL 52336, UC-414 1992.
J. Kirchgessner et al., *Superconducting RF Activities at Cornell University*, SRF 950908-13, Cornell, 1995, see also SRF 950714-05.
H.Henke, *mm Wave Linac and Wiggler structure*, EPAC 94, London.

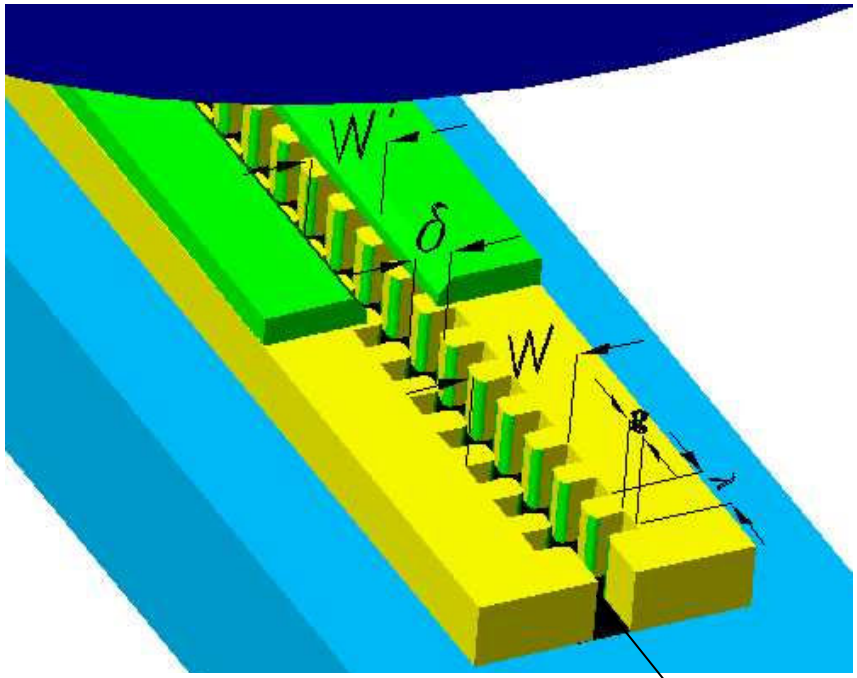

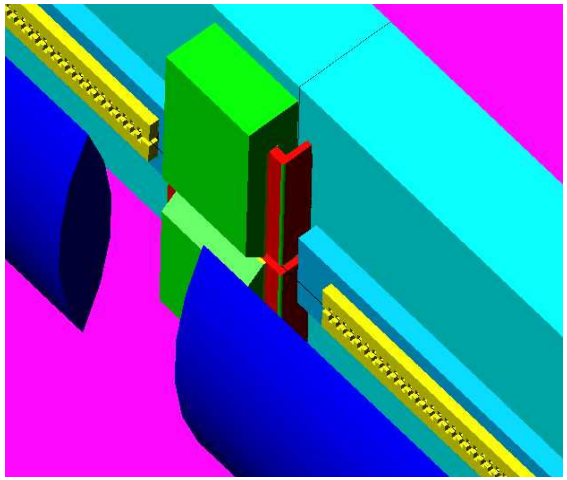

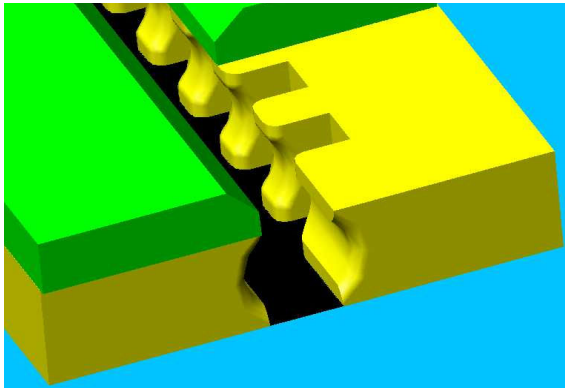

Beam is going *inside the structure at half of the height*.

Each cell has inductive coupling with outer space as its height ~$\lambda_w/2$

Modified Foxhole type structure

Better pumping

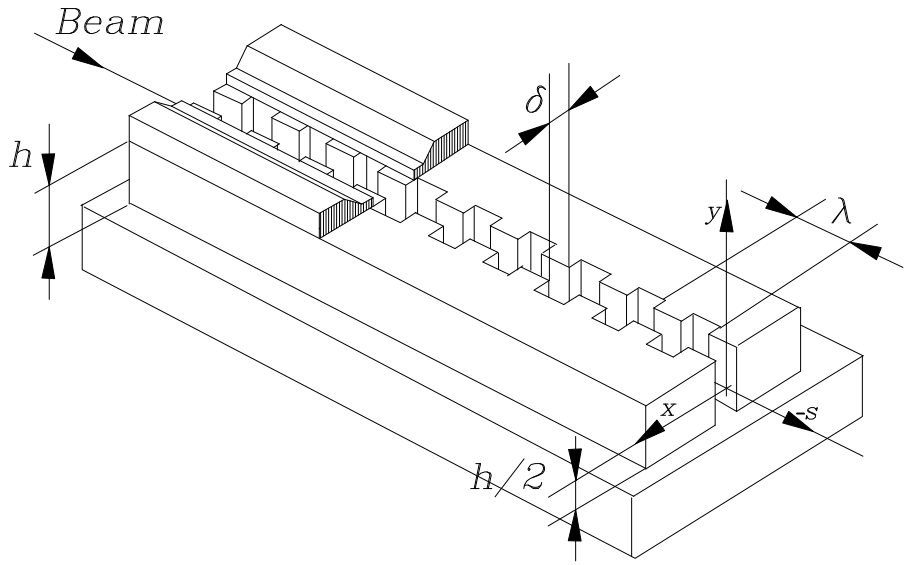

Our structure has height h~λ/2;

Inductive coupling

$$E_s \cong E_m Cos\frac{\pi x}{W} Cos\frac{\pi y}{h} Cos\omega t \qquad H_x \cong \frac{E_m \lambda}{2hc} Cos\frac{\pi x}{W} Sin\frac{\pi y}{h} Sin\omega t \qquad H_y \cong \frac{-E_m \lambda}{2Wc} Sin\frac{\pi x}{W} Cos\frac{\pi y}{h} Sin\omega t$$

$$k_x = -\frac{1}{pc}\frac{\partial\langle F_x\rangle}{\partial x} \cong -\frac{e\lambda_{ac}E_m}{mc^2\gamma W^2} Sin\varphi \qquad \approx 4\cdot 10^5 \cdot Sin\varphi [m^{-2}]$$

WAKES

Wakes calculated with MAFIA and GdfidL, FlexPDE under preparation

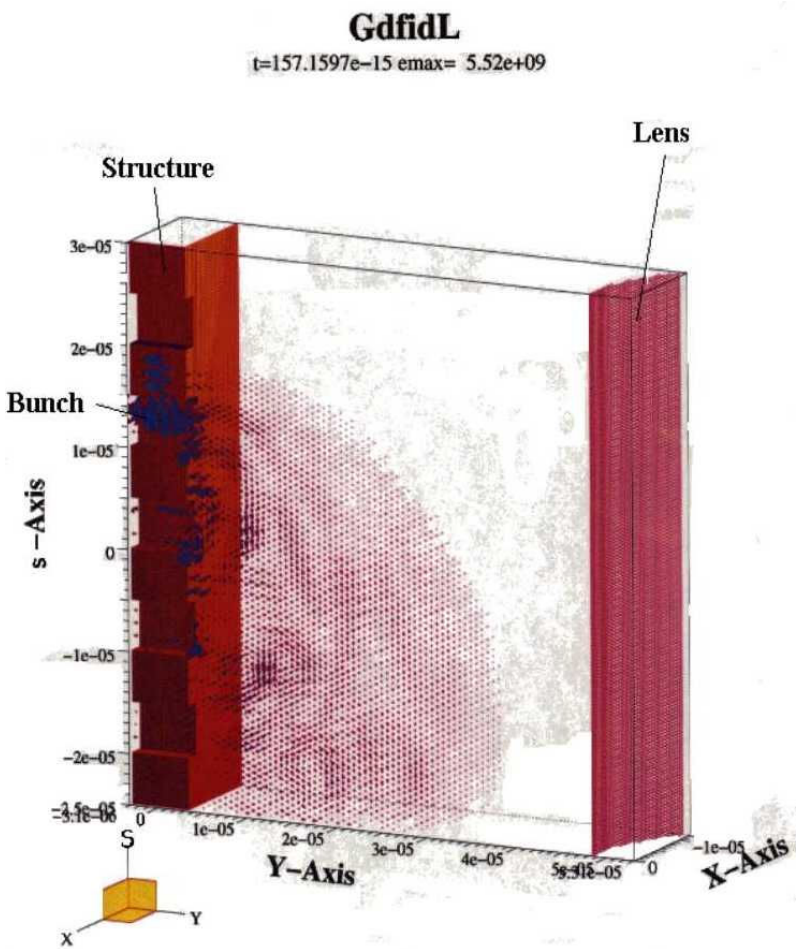

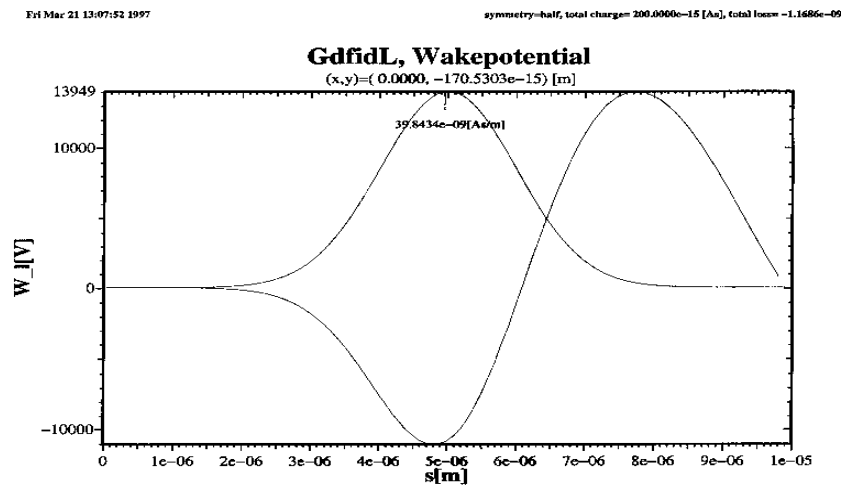

$$W_{\parallel} \cong -7kV/pC \qquad W_{\perp} \cong 2.2 \cdot 10^{2} V/pC/\mu m$$

$$N \cong 310^{5} \qquad eN \cong 4.8 \cdot 10^{-14} C = 0.048 pC$$

Wakes/Acceleration ~4%,

High gradient requires for keeping reasonable ratio of

(Energy carried out by wakes) / (Energy stored in cavity)

This is in line with desire to have accelerator as compact as possible.

BUNCHING

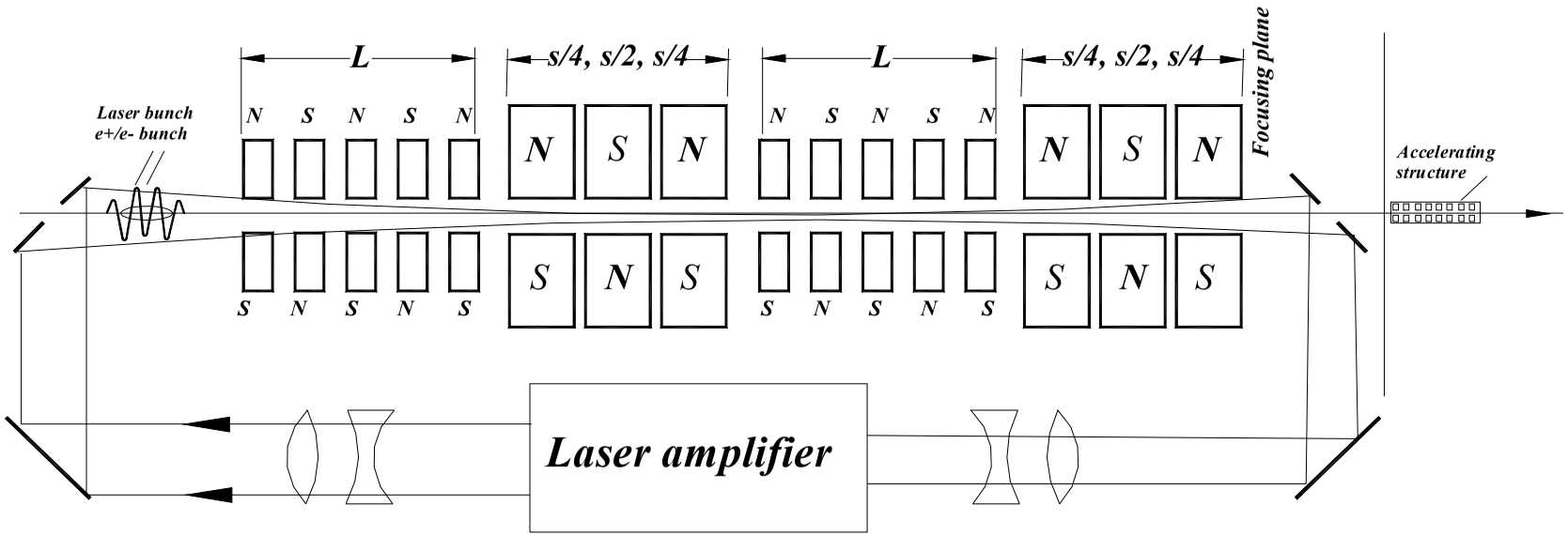

A cascade bunching scheme. *K* factor in second wiggler is other, than in the first one. This scheme is an analog of a Klystron with two cavities and two drifts

FABRICATION

We suggesting Silicon mono-crystal, doped

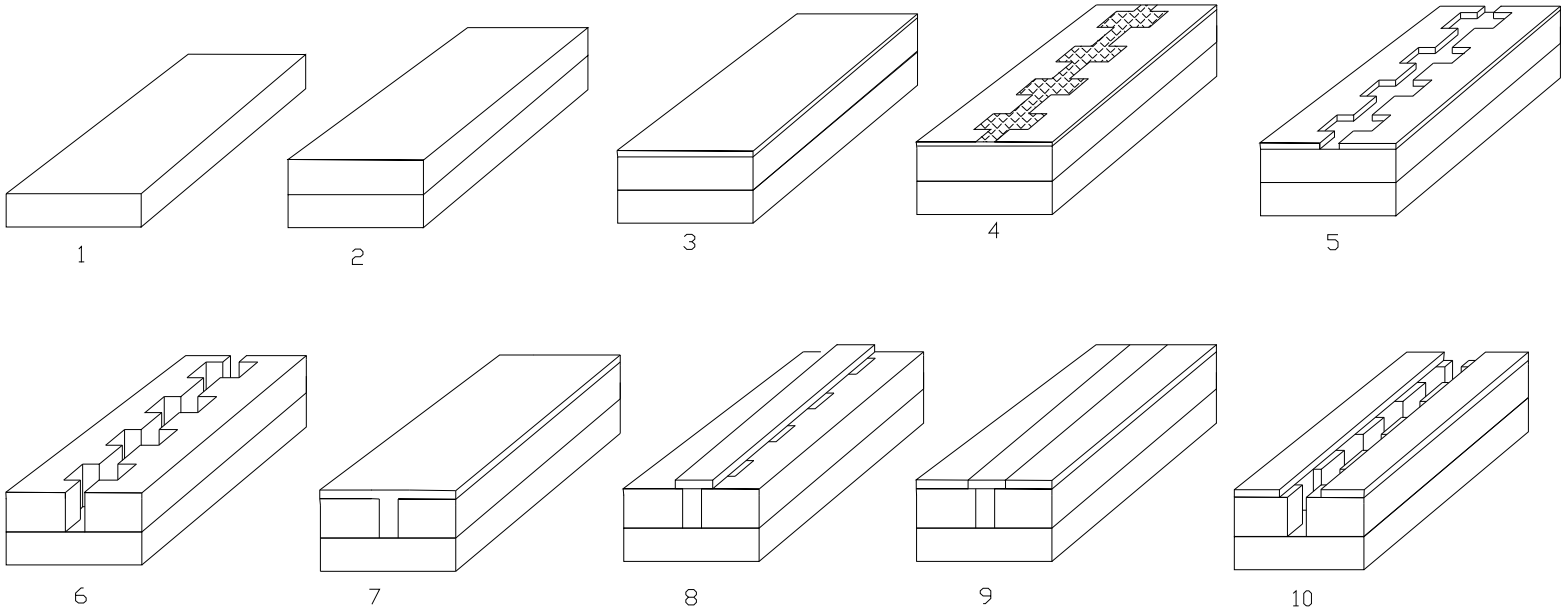

1– is a base. 2–material of the structure is placed on the base. 3–a photoresist is placed at the top. 4–the photoresist is exposed. 5–some of photoresist is removed. 6–material of the structure etched. 7–a new cover of photoresist is placed. 8–extra resist is removed. 9–material of the structure is added. 10–structure etched again.

INJECTION SOURCE

Fundamental restriction to the minimal emittance $(\gamma\varepsilon_x)(\gamma\varepsilon_y)(\gamma\varepsilon_s) = (\gamma\varepsilon_x)(\gamma\varepsilon_y)(\gamma l_b(\Delta p/p_0)) \geq \frac{1}{2}(2\pi\lambda\!\!\!^{-}_C)^3 N$

A.A. Mikhailichenko, *On the physical limitations to the Lowest Emittance (Toward Colliding Electron-Positron Crystalline Beams)*, 7th–Advanced Accelerator Concepts Workshop, 12-18 October 1996, Lake Tahoe, CA, AIP 398 Proceedings, p.294. See also CLNS 96/1436, Cornell, 1996, and in *To the Quantum Limitations in Beam Physics*, CLNS 99/1608**,** PAC99, New York, March 29- April 2 1999, Proceedings, p.2814.

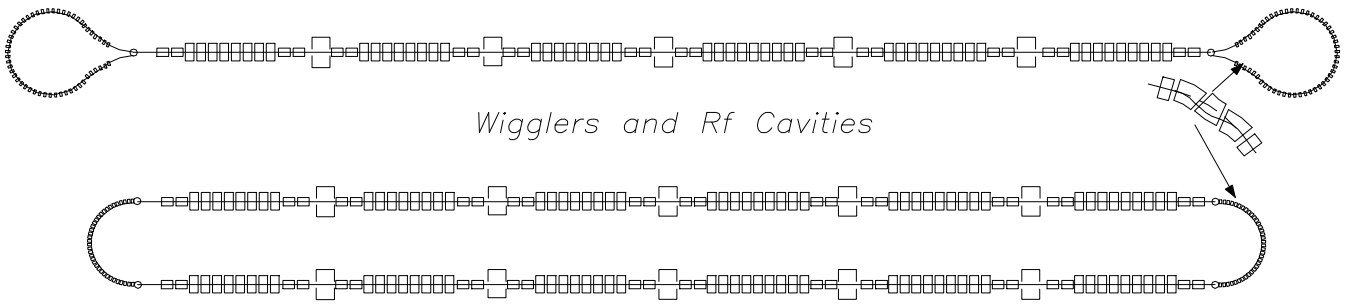

For wiggler dominated cooler equilibrium emittance

$$(\gamma\varepsilon_x) \cong \tfrac{1}{2}\cdot\lambda\!\!\!^{-}_C\overline{\beta}_x(1+K_x^2/2)\gamma/\rho_x \cong \tfrac{1}{2}\cdot\lambda\!\!\!^{-}_C\overline{\beta}_x(1+K_x^2/2)K_x/\lambda\!\!\!^{-} \qquad (\gamma\varepsilon_y) \cong \frac{1}{2}\cdot\lambda\!\!\!^{-}_C\overline{\beta}_y\gamma/\rho_x \cong \frac{1}{2}\cdot\lambda\!\!\!^{-}_C\overline{\beta}_y K_x/\lambda\!\!\!^{-}$$

Cooling time $\tau_{cool} \cong (3/2)\cdot(\lambda\!\!\!^{-2}/r_0 c K^2\gamma)$ ~ 8.6 *ms*. $K = eH_\perp\lambda\!\!\!^{-}/mc^2$ Number of particles~10^5 makes IBS acceptable

TEMPERATURE

$$\tfrac{3}{2}Nk_BT \cong N\cdot mc^2\gamma\left[\frac{\gamma\varepsilon_x}{\beta_x}+\frac{\gamma\varepsilon_y}{\beta_y}+\gamma\frac{1}{\gamma^2}\left(\frac{\Delta p_\parallel}{p_0}\right)^2\right] \rightarrow N\cdot mc^2\gamma\left[\frac{\gamma\varepsilon_x}{\beta_x}+\frac{\gamma\varepsilon_y}{\beta_y}+\gamma\left(\frac{1}{\gamma^2}-\left\langle\frac{D}{\beta_x}\right\rangle\right)\left(\frac{\Delta p_\parallel}{p_0}\right)^2\right]$$

Emittance possible

$$(\gamma\varepsilon_y) \cong 9.5\cdot 10^{-10}\,cm\cdot rad \qquad (\gamma\varepsilon_x) \cong 2.5\cdot 10^{-8}\,cm\cdot rad$$

Relation between coordinates of the cooler and the structure

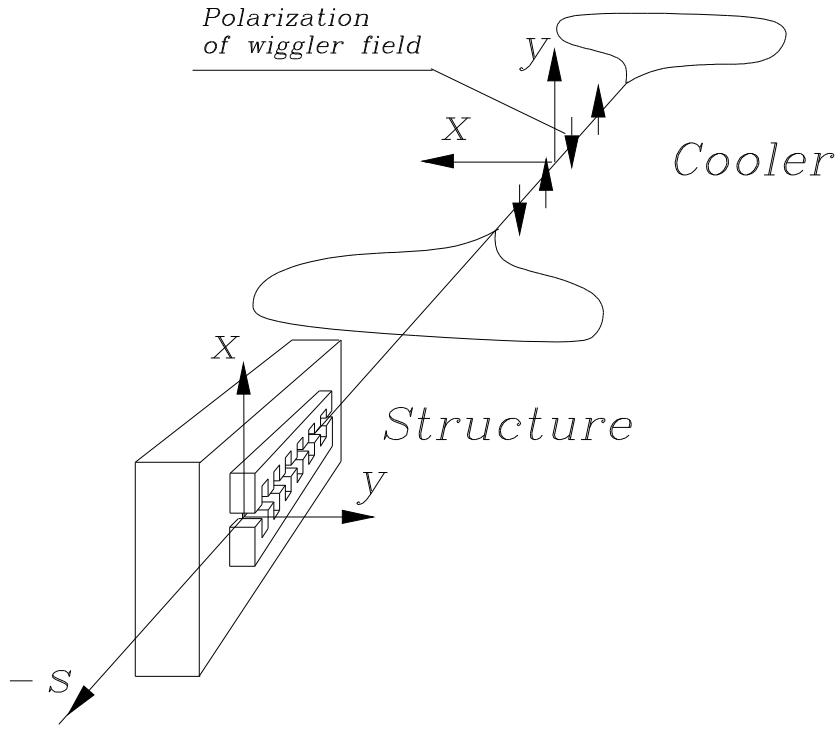

Polarization of the wiggler field is vertical; the bends of cooler are going in horizontal plane. If polarization of the wiggler field is horizontal, the x coordinates might be the same, and the cooler plane and the plane of the structure may coincide.

This orientation gives the direction of largest emittance along the narrow side of the slit.

BEAM PARAMETERS

If laser flash lasts τ ***sec*** **and caries energy** ***Q Joules*** **then maximal field** $E_m \cong 2\sqrt{\dfrac{Q}{\varepsilon_0 c \tau \lambda l_f}}$

Q=10^{-4} J $\tau \cong$ 0.1 *ns* $\lambda \cong 1\mu m$ Q_{RF}=9 $E_m \cong$ 10*GeV/m*

Bunch population $N \cong \dfrac{\eta}{2eI(g)}\sqrt{\dfrac{\varepsilon_0 \lambda_{ac}^3 Q}{c\tau l_f}} \cong 3\cdot 10^5$ For 5% load, η=0.05

Luminosity $L = \dfrac{N^2 f H_B}{4\pi\sigma_x\sigma_y}$ $\gamma\varepsilon_x \cong 2.5\cdot 10^{-8} cm\cdot rad$ $\beta_x \approx \beta_y \approx 0.3\lambda_{ac}$ $f \cong$ 1 kHz, H_B=1

$\gamma\varepsilon_x \cong 9.5\cdot 10^{-10} cm\cdot rad$

$$L \approx 1.7\cdot 10^{35} cm^{-2} s^{-1}$$

$Y_0 \equiv 2\hbar\omega_c / 3E = \gamma H / H_c$ ~10^3

$H_c = m^2c^3 / e\hbar \cong 4.4\cdot 10^{13}$

Aspect ratio at IP $\sigma_x / \sigma_y \cong$ **5**

Critical energy $\hbar\omega_c \cong mc^2\gamma / Y_0$

Formation length $l_F \cong \lambda\!\!\!^{-}_C \gamma / Y_0^{2/3}$

Transverse size of coherence $\sigma_\perp^{coh} \cong \sqrt{\lambda\!\!\!^{-}_{cr} l_F \sigma_b} \cong Y_0^{1/6}\lambda\!\!\!^{-}_C$

$\sim 3\lambda\!\!\!^{-}_C \cong 1.15\cdot 10^{-10} cm$

Focusing with RF lenses

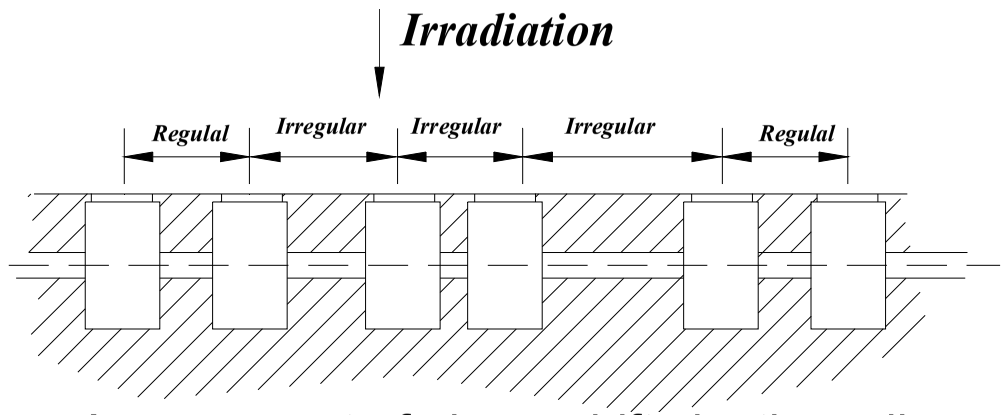

Arrangement of phase shifts in the cells

$$k_x = -\frac{1}{pc}\frac{\partial\langle F_x\rangle}{\partial x} \cong -\frac{e\lambda_{ac}E_m}{mc^2\gamma W^2}Sin\varphi$$

$$k_y = -\frac{1}{pc}\frac{\partial\langle F_y\rangle}{\partial y} \cong -\frac{e\lambda_{ac}E_m}{mc^2\gamma h^2}Sin\varphi$$

DETECTOR and IP

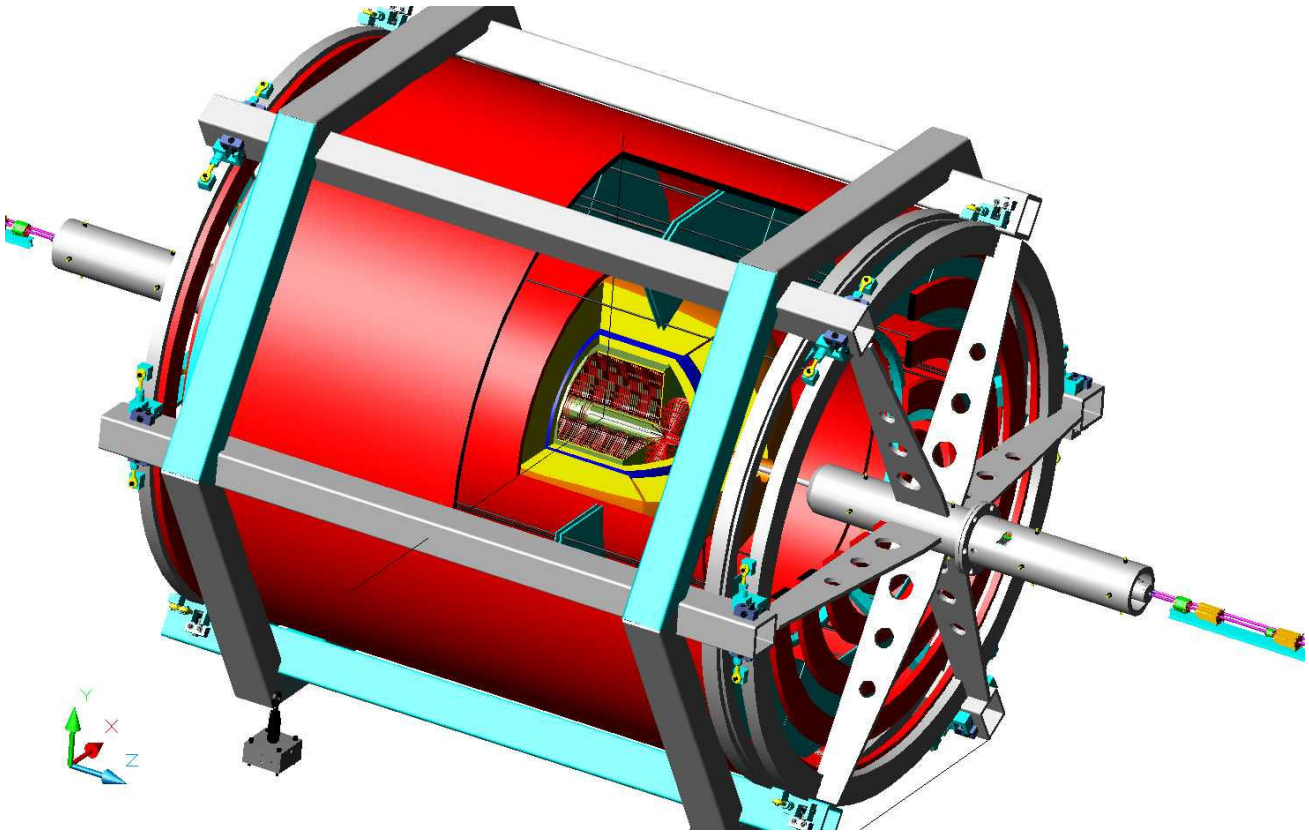

There is no magnetic yoke in this detector. **Focusing arranged with the help of multiplet of RF quadrupoles on the basis of accelerating structures. The number of RF lenses in multiplet ~200.**

RF gradient slowly varies from very strong at closest to IP side to a weak one; *k*~100 1/m^2

In modular detector the solid angle available for registration is large.

So the lens with 1000 cells reaches the focal distance *F*=20 *cm*. Let just remind that these cells will occupy 0.1 cm only.

Dual readout for muon identification

Modular detector; suggested as 4-th concept

Opposite bunch could focus strongly. Modeled behavior of envelop function

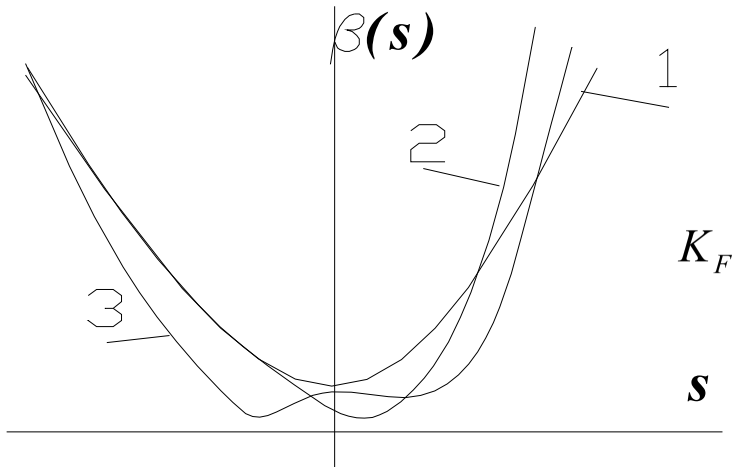

$$K_F \cong \frac{eG}{pc} \cong \frac{e^2 N}{2mc^2 \gamma \sigma_\perp^{*2} \sigma_b} \approx \frac{r_0 N}{2\gamma \sigma_\perp^{*2} \sigma_b}$$

1 – corresponds to weak incoming bunch, 2 –corresponds to the same initial conditions as 1 but K_F is big, 3 –corresponds to the changed initial conditions, so the crossover shifted to the left. All envelope functions shown are for the bunch moving from the left to the right.

We suggested an arrangement of the final focusing for our purposes as *a multiplet* of FODO structures. The number of the lenses in such a multiplet is around a few hundreds. This is so called ***Adiabatic Final Focus***. The gradient in these lenses must vary from the very strong at the side closest to IP, to a weak one at opposite side. Focusing properties of the RF lens, discussed above can be used here. A laser radiation of general and multiple frequency can be used for such focusing.

Plasma focuser described by

P.Chen, K.Oide, A.M.Sesler,S.S.Yu, "**Plasma based adiabatic Focuser**" , Phys.Rev.Lett.64:1231-1234,1990.

FEEDBACK AND ALIGNMENT

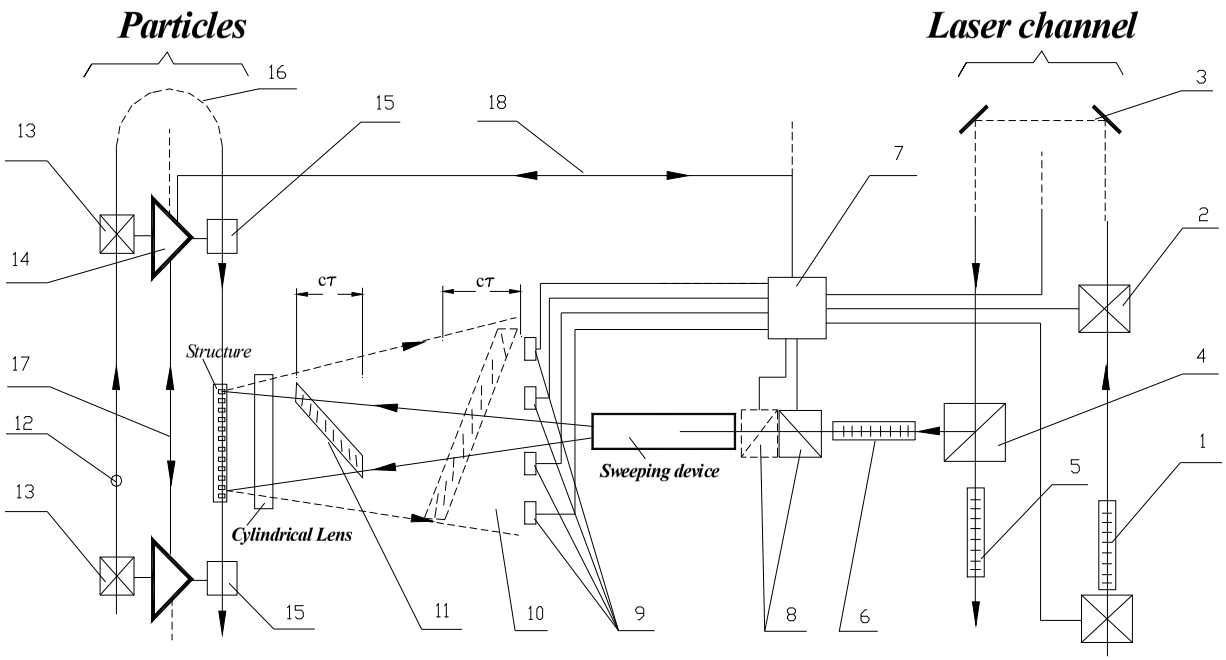

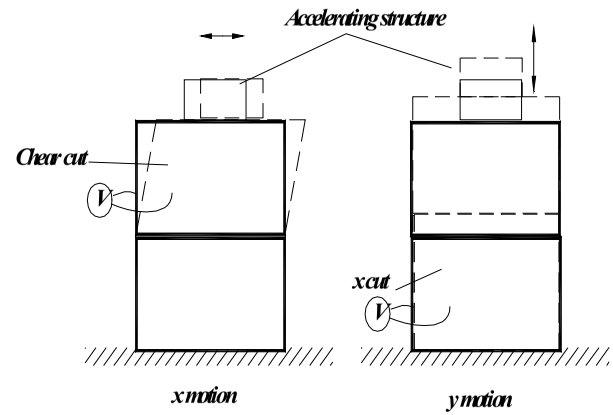

Movement of structure

$$(\Delta\vartheta)^2 \equiv \left(\frac{\Delta p_\perp}{\Delta p_\parallel}\right)^2 << \frac{\varepsilon}{\beta}\left(\frac{p_\parallel}{\Delta p_\parallel}\right)^2 = (\Delta\vartheta)^2_{beam}\left(\frac{\gamma}{\Delta\gamma}\right)^2$$

$$\Delta\vartheta_y \cong 2\cdot 10^{-5}$$

$$\Delta\vartheta_x \cong 7\cdot 10^{-4}$$

1–is a driving laser bunch, 2–is transverse position sensor for a laser bunch, 3–is a laser back reflector loop, 4 –is a power splitter, 5–is a driving bunch on the way to next module, 6–is a splitted part of driving laser bunch, 7–is a processor, 8–are the beam deflectors for two transverse directions, 9–is an array of optical sensors, 10–is a reflected laser bunch, 11–is a sweeped laser bunch. 12–is an electron/positron bunch on the way to the beginning of accelerator. 13–are the pick up electrodes, 14–is a functional amplifier, 15–is a transverse kickers, 16–is a beam back returning loop, 17,18 –are the lines of the signal processed. Lines across the laser bunch indicate the wavefronts. The back loop 3 located at the beginning of accelerator (acceleration process).

ACCELERATOR TABLE

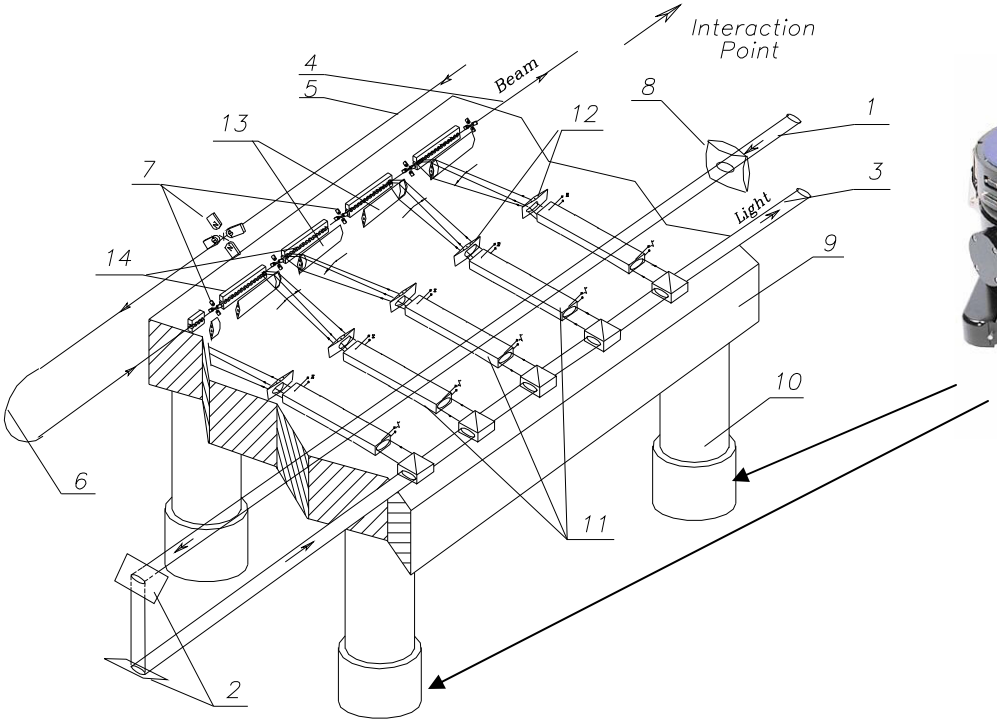

Primary laser beam 1 goes to the end of accelerator. Mirrors 2 redirect it back, pos.3, trough the sequence of splitters. In the similar way the particle's beam 5, goes trough bending system 6 and further trough structures to next modules, 4. 7 and 8 –are the focusing elements for the laser and particle's beam respectively. Optical platform 9 is standing on legs 10 with active damping system to minimize vibrations. 13–cylindrical lenses, 14–are the accelerating structures. All elements on the table are located in a vacuumed volume, not shown here.

If the tunneling probes have resolution 0.01nm, the basis ~10cm, then deviation of other end of optical table having length~2m will be 0.2nm, i.e. $\sim 2 \cdot 10^{-4} \lambda_{ac}$.

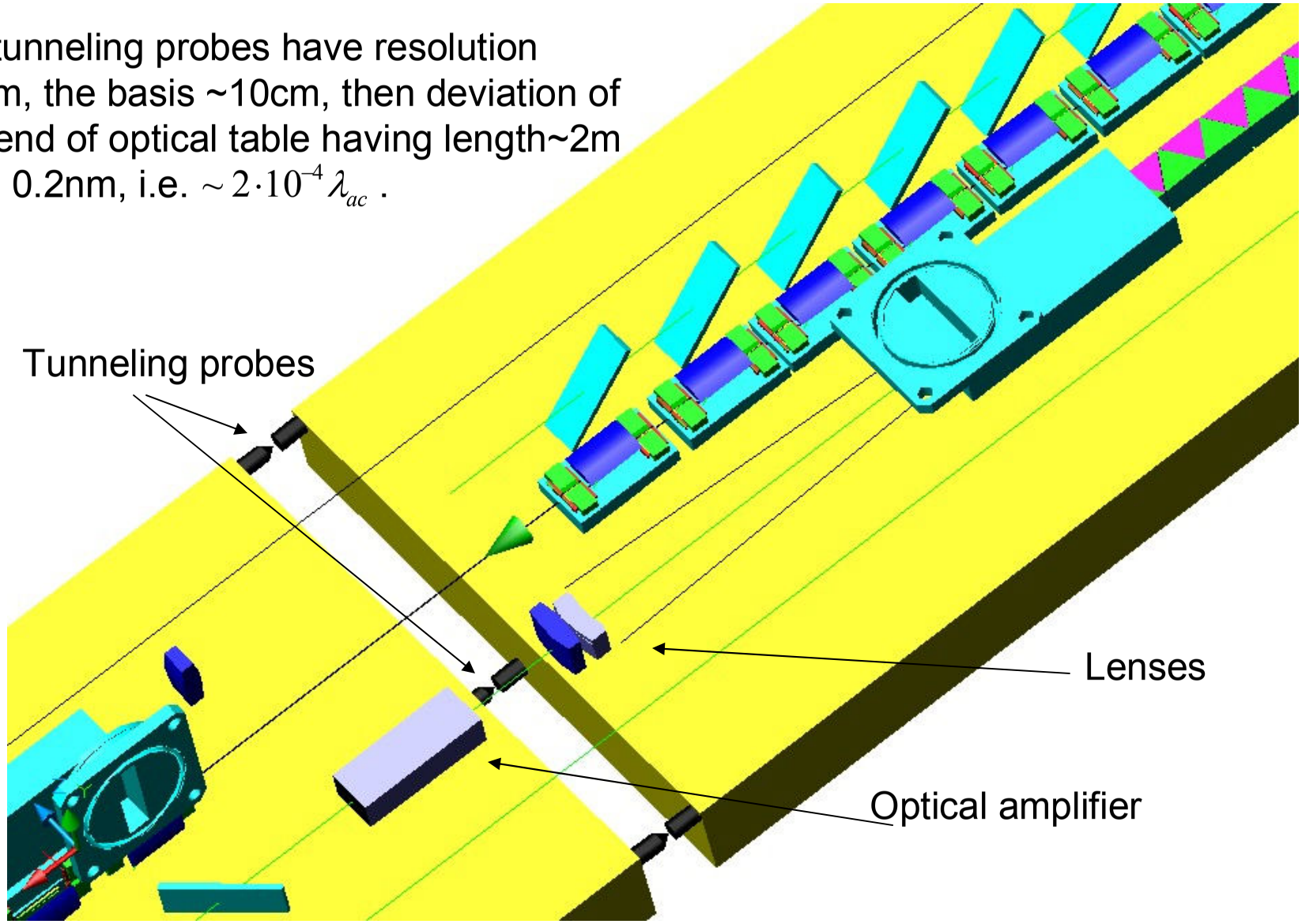

Cross section of a tunnel with accelerating system for underground location.

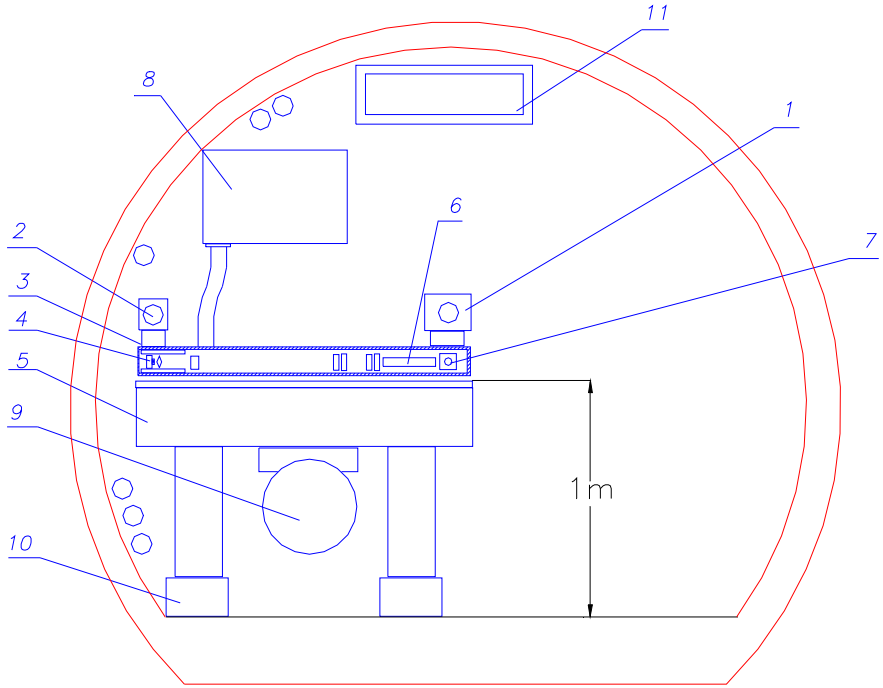

Neighboring platforms aligned with help of sensors, installed at the end of each platform. So the sensor installed at one platform touches neighboring one. The sensors are similar to that used in tunneling microscope technique. This system could be made fast enough to exclude influence of ground motion, mostly intensive at lower edge of the spectrum.

1– is a primary optical beam line. 2–is a primary particle's beam line. 3–is a vacuumed container with all equipment. 4–is an accelerating structure with sub systems. 5–is an optical table. 6–is the deflecting device, 7 –is the line for driving optical beam, 8–is a box with equipment for deflecting device and control. 9–is a tube with optical elements for active alignment of all optical tables. 10–is an anti-vibration active system. 11–is a duct for air-conditioning.

EFFICIENCY OF DIOD PUMPING SYSTEM IS MORE THAN 50%

Datasheet | Product Drawing | Application Notes

		P10	P16
Optical			
Wavelength	nm	80x / 88x / 9xx	
Wavelength tolerance	nm	± 3	
CW output power	W	50 / 60 / 70	100 / 110 / 120
Fiber core diameter	µm	400, 600 @ 0.16NA 800 @ 0.13NA	400, 600 @ 0.16NA
Fiber length	m	2.0, 3.0, 5.0	
Slope efficiency	W / A	10.5	17
Electrical			
Power conversion efficiency	%	50 / 54 / 58	
Threshold current	A	1.0 / 1.0 / 0.6	
Operating current	A	5.8	7.0
Operating voltage	V	17	28
Series resistance	Ω	0.3	0.4

nLIGHT PHOTONICS

Preliminary Data Sheet | NL-SAG

300W (cw), η_e=50%, λ=780-1000 nm

High Power Stacks

nLight Photonics' high power stacked bar module provides state-of-the-art power levels in a compact package. Starting with high power diode 1 cm bars, multiple modules are stacked to provide extremely high output power. These modules are water cooled to maximize output power without sacrificing the lifetime of the diode.

Optical	
Center Wavelength (Range)	780-1000nm
CW Output Power	300W (6 plates)
Center Wavelength Tolerance	±3.0nm
Array Length	1cm
Electrical	
Total Conversion Efficiency	50%
Threshold Current	10A
Operationg Current	60A
Operating Voltage	< 12V
Series Resistance	0.04Ω
Thermal	
Thermal Resistance	0.35°C/W
Operating Temperature	10°C to 40°C
Fluid Flow Rate	300 ml/min/plate
Inlet to Outlet presure drop	30 psi
Deionized Water Resistivity	.5 – 2Mohm-cm
Filter	< 20µm

Laser Linear Collider (LLC) complex

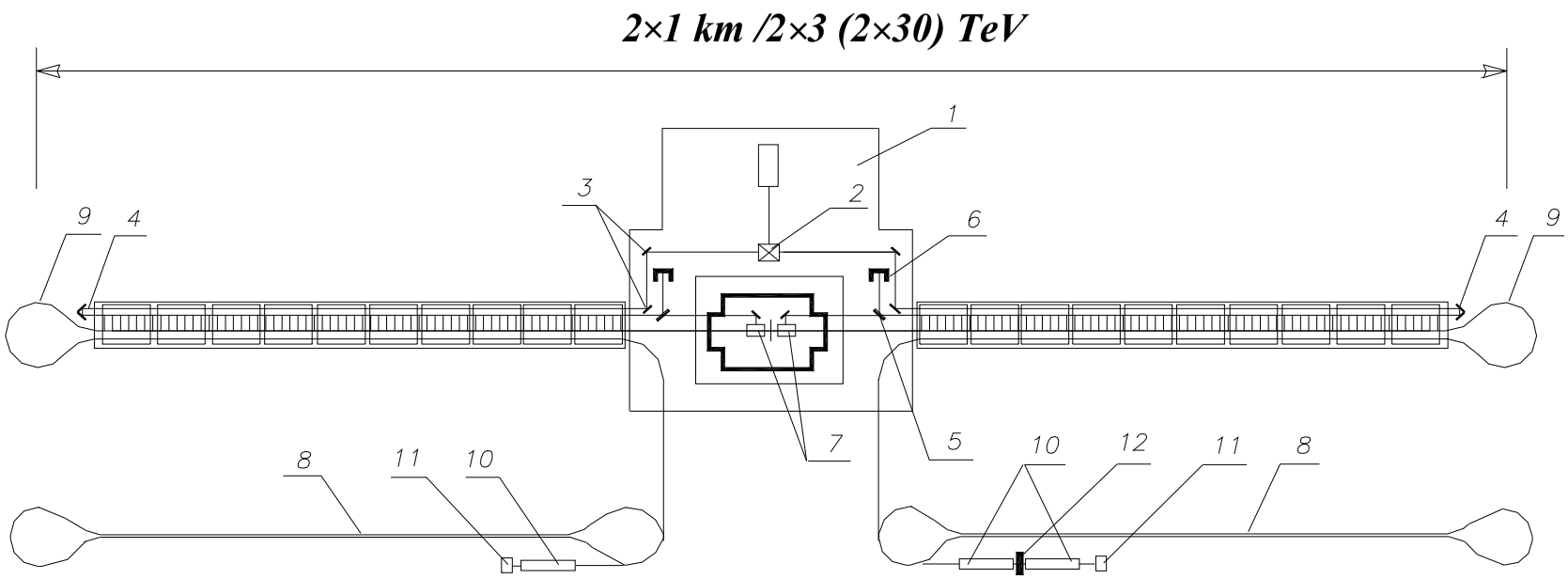

1–is a laser master oscillator platform, 2 –is an optical splitter, 3,4–are the mirrors, 5–is a semi-transparent mirror, 6–is an absorber of laser radiation. 7–are the Final Focus Systems. 8–are the damping systems for preparing particle's beams with small emittances, 9–are the bends for particle's beam. 10–are the accelerating X-band structures, 11–is an electron gun, 12–is a positron converter. The scheme with the damping rings as sources are shown here.

PARAMETER LIST

Wavelength	$\lambda_{ac} \cong 1\mu m$
Energy of $e^{\pm}$ beam	$2 \times 10\ TeV$
Luminosity	$10^{35} cm^{-2} s^{-1}$
Total two-linac length	$2 \times 1\ km$
Main linac gradient	$10\ GeV/m$
Bunch population	$3\ 10^5$
Bunch length	$0.1\ \mu m$
No. of bunches/train	30
$\gamma\ \varepsilon_x\ /\ \gamma\ \varepsilon_y$	$5 \cdot 10^{-9} / 1 \cdot 10^{-9}\ cm \cdot rad$
Laser flash energy	$2 \times 3J$
Laser density	$0.3\ J/cm^2$
Illumination time	0.1 ps
Length of section	$3cm$
Laser flash energy/section	100μJ
Repetition rate	$1\ kHz$
Laser beam power	$2 \times 3kW$
Damping ring energy	$2\ GeV$
Damping time	10ms
Wall plug power**	$2 \times 30\ kW$

** Without supplementary electronics.

Cost of this installation 200M$/2000m=100k$/m looks reasonable

From Snowmass 2001; conservative ~1.5 GeV/m

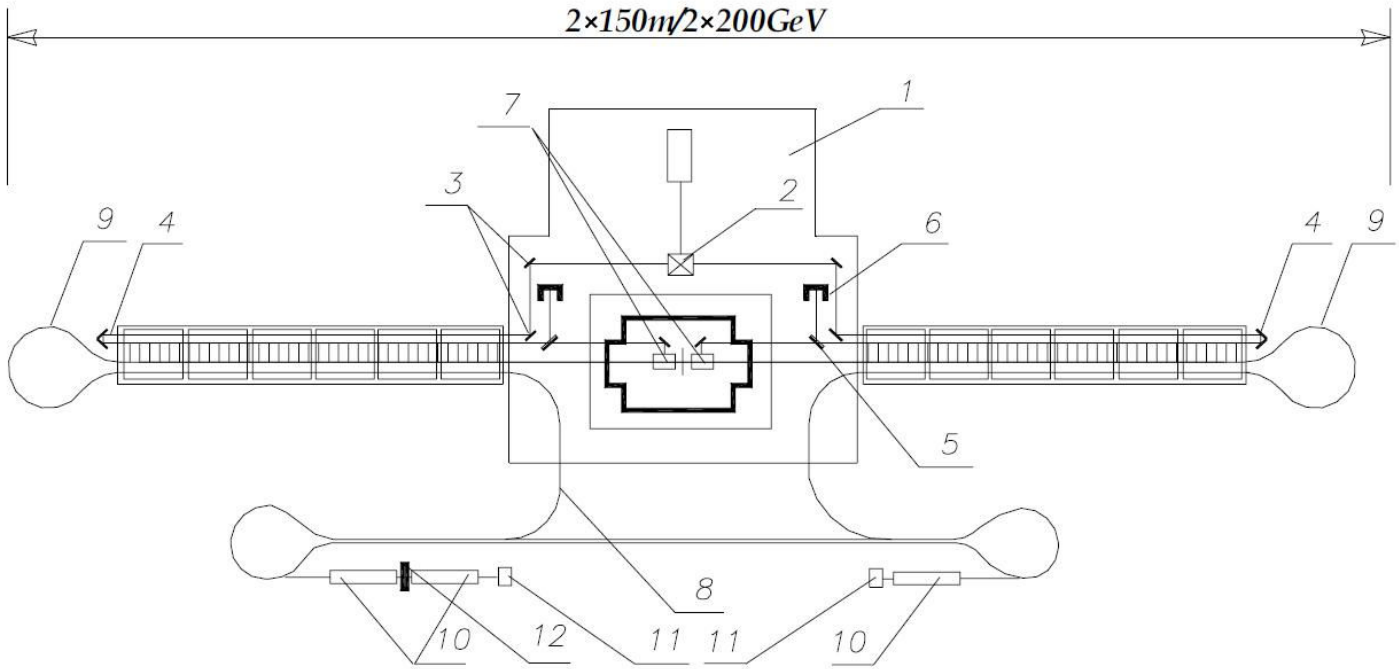

FIGURE 37: Laser Linear Collider (LLC) complex. 1–is a laser master oscillator platform, 2 –is an optical splitter, 3,4–are the mirrors, 5–is a semi-transparent mirror, 6–is an absorber of laser radiation. 7–are the Final Focus Systems. 8–are the damping systems for preparing particle's beams with small emittances, 9–are the bends for particle's beam. 10–are the accelerating X-band structures, 11–is an electron gun, 12–is a positron converter. The scheme with the damping rings as sources are shown here.

Even for cost 1M$/m this 2x200GeV collider will cost 300M$ only

(compare with 15B$ for ILC)

Feasibility of pion-pion and muon-muon Collider

The accelerating gradients of the order 30 *GeV/m* allows to reach 150 *GeV* at a ten-meter distance, suggesting 50% filling with accelerating structures. This could delivery the gamma factors $\gamma_\mu \cong 150/0.105 \cong 1430$ and $\gamma_\pi \cong 150/0.139 \cong 1079$ for muons and π–mesons respectively. So the decay distance for these particles at this energy will be $c\tau_\mu\gamma_\mu \cong 658 \cdot \gamma_\mu[m] \cong 9.4 \cdot 10^5 m$ for muons

and $c\tau_\pi\gamma_\pi \cong 7.8 \cdot \gamma_\mu[m] \cong 8.4 \cdot 10^3 m$ for π–mesons respectively.

So these figures make and *direct* collisions feasible.

For luminosity 10^{30} $cm^{-2}sec^{-1}$ the number of particles required is 10^4 only (same area of colliding beams as suggested for electrons/positrons).

If we take primary proton beam with 10^{14}, which is under discussion for traditional scheme of muon-muon collider, then resulting efficiency required 10^{-9} only.

Pion-pion and muon-muon collider setup

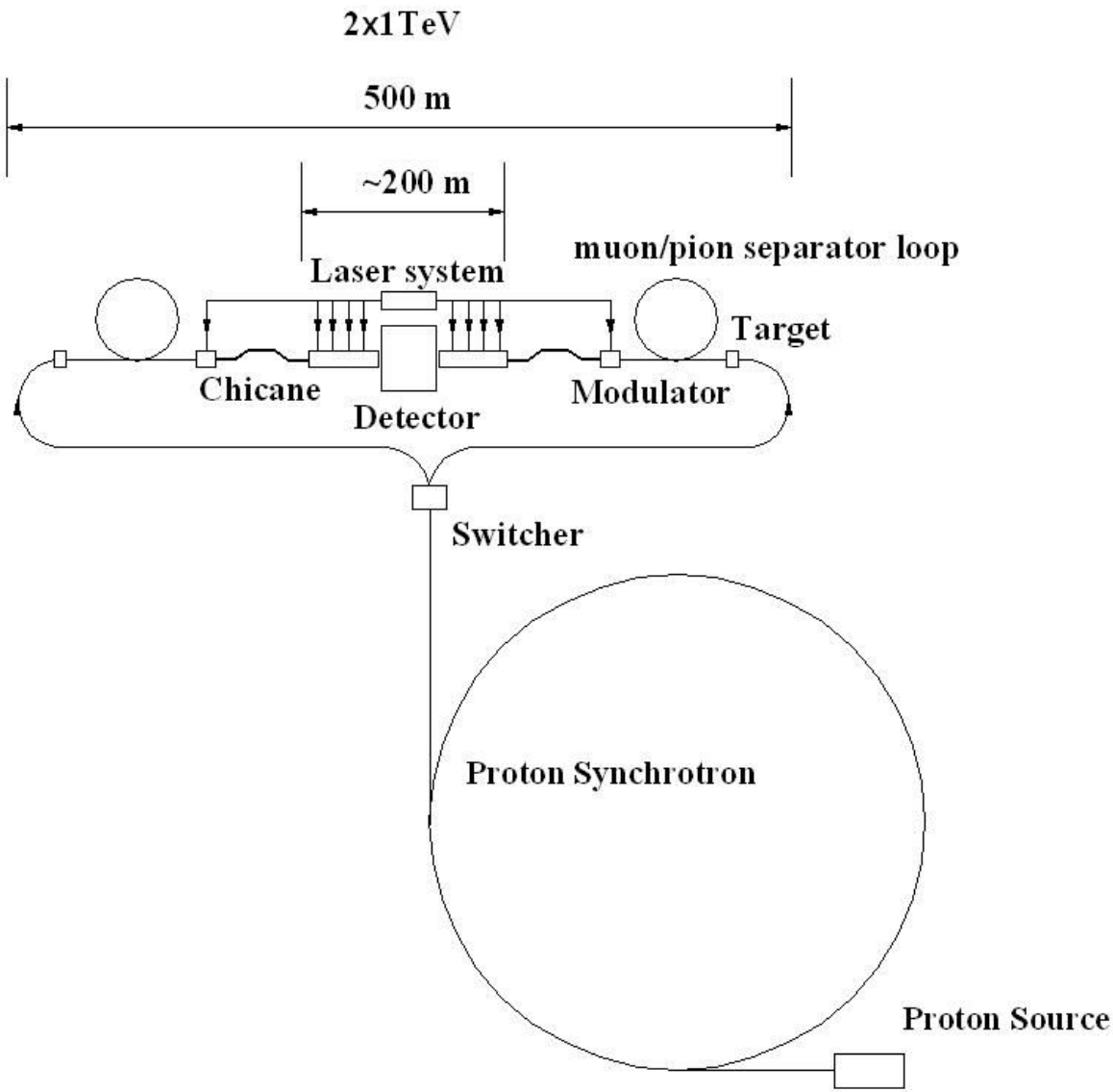

Effective spectrum of the secondary pions accelerated to final energy E_{fin}, could be represented as the following

T.A. Vsevolojskaya, G.I. Silvestrov, A.N.Skrinsky, *Acceleration of Pions and Muons in the UNK-VLEPP complex*, Preprint BINP 91-36, Novosibirsk, 1991.

$$\frac{dN_\pi}{dy} \cong \frac{<n_\pi^\pm>}{\sqrt{2\pi L}}\left(\frac{m_\pi c^2}{E_{fin}}\gamma^{1+\mu/2}\right)^\mu \exp[-\frac{(y-(y_0+\mu L))^2}{2L}]$$

$$L_n = \ln\gamma$$

y=atan(v/c) -rapidity

$<n_\pi^\pm>$-average pions multiplicity, $\mu = \frac{m_\pi c^2}{c\tau_\pi dE/ds}$, dE/ds- accelerating rate, τ_π pion lifetime at rest

For dE/ds ~10 *GeV/m*, μ~0.002, so the losses absent practically → no shift of maximum

For the target made on Copper, and primary 3*TeV* proton beam, the maximum is around ~2.8 *GeV/c* . Transverse momentum distribution

$$\rho(p_\perp)d^2p_\perp \cong m_\perp \sum_{k=1}^{\infty} K_1\left(\frac{km_\perp}{T}\right)d^2p_\perp$$

$$m_\perp = \sqrt{m_\pi^2 + p_\perp^2}$$

$$T \cong m_\pi$$

This distribution gives $<p_\perp^2> \cong 0.15\,(GeV/c)^2$ $\quad \varepsilon_\perp \cong 0.15\ cm\cdot rad$ $\quad \frac{1}{N_0}\frac{dN_\pi}{dy} \cong 1/proton$

Invariant emittance $\gamma\varepsilon_\perp \cong \lambda\gamma <\vartheta^2> \cong \frac{\gamma <p_\perp^2>}{n\sigma_{pA}p^2} \propto \frac{1}{\gamma} \sim 3cm-rad$ and $N_\pi \sim 10^{14}\Delta y$

Let us suggest that we collect the pions with energy in 10^{-3} of absolute interval.

This yields for the number of pions $N_\pi \sim 10^{11} / pulse$

As we need 10^4 only we allowed having efficiency of the order of $N_\pi / N_p \approx 10^{-7}$.

To obtain the - $\gamma\varepsilon \cong 10^{-8} cm \cdot rad$ required, we suggest first to shift the center of collected particles to the higher energy so, that corresponding emittance will drop respectively.

Suggesting new collecting energy as high as 28*GeV* i.e. about 1% of initial (3*TeV*), we are coming to $\gamma\varepsilon \approx 0.3 cm \cdot rad$ and about $N_\pi \sim 10^{11} / pulse$.

In this case we could collect only 10^{-7} of all pions.

Now the center of the problem shifted to the longitudinal phase space acceptance.

Suggesting the energy spread in the primary bunch as 10^{-4} we are coming to necessity to have the energy modulation required overcoming the energy spread about $300 MeV$.

A few stages OK system could easily provide the energy modulation of few times of this value.

So we are optimistic on the possibility to prepare the number of particles required distributed along the distance of the laser-accelerating wavelength.

Secondary bunch will have the same length as a primary proton bunch, enlarged as a result of energy spread in secondary bunch.

Direct collision at high energy without any acceleration at all might be a possibility.

Of cause some of the figures could be treated as extremely optimistic, but there is no *fundamental* restrictions on them.

Separation of muons from pions is main challenge in this method

Other example

Table top device

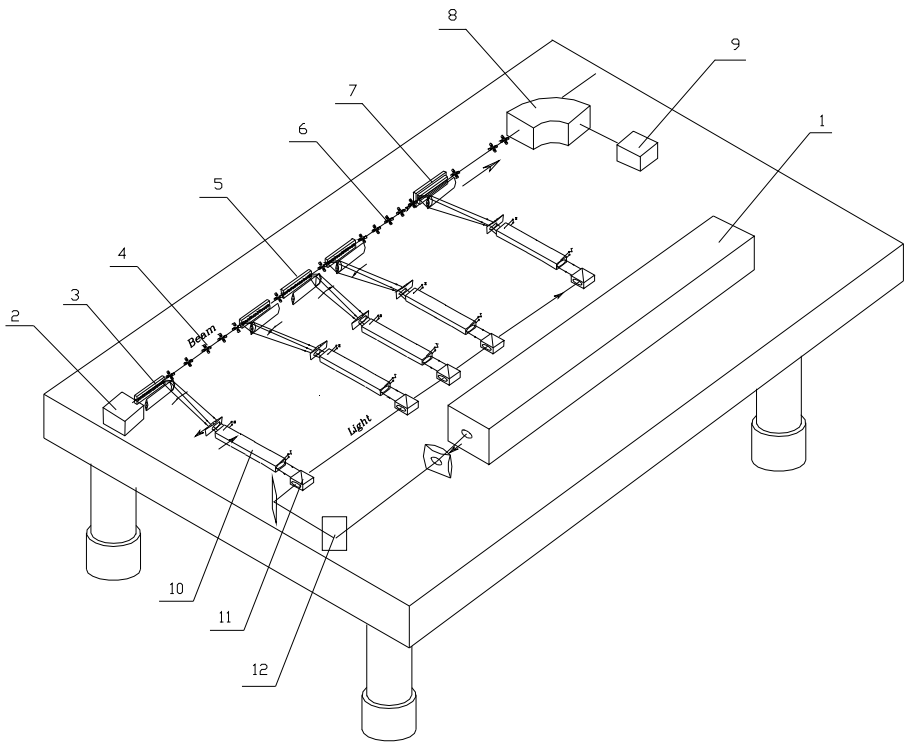

All elements installed on a platform. Light means laser beam. Other comments are in the text. Vacuumed cover for the beam part is not shown. 1 –is a laser, 2–source of particles, including micro-tip and movers, 3–RF prebuncher, 4–space for buncher (if necessary), 5–main acceleration modules, 6–focusing elements, 7–a region for laser wiggler, 8–bending magnet, 9–beams dump, 10–a sweeping device, 11–a splitting device, 12–a mirror.

Wavelength	$\lambda_{ac} \cong 1\mu m$
Energy of the $e^{\pm}$ beam	100 *MeV*
Active linac length	10 *cm*
Main linac gradient	1.0 *GeV/m*
Bunch population	10^6
No. of bunches/pulse	10(<100)
Laser flash duty	100 *ps*
Laser flash energy	*5mJ*
Repetition rate	160 *Hz*
Average laser power	~0.8*W*
Average beam power	26 *mW*
Bunch length	0.1 μm
$\gamma\,\varepsilon_x\ /\ \gamma\,\varepsilon_y$	$\approx 10^{-8}/10^{-8} cm \cdot rad$
Length of section/Module	3*cm*
Wall plug power	3.5*kW*

ELECTRON SOURCE

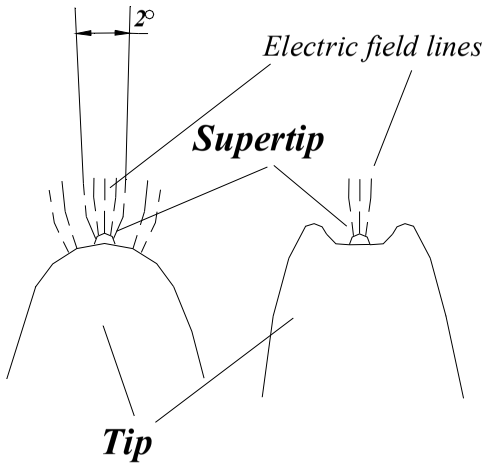

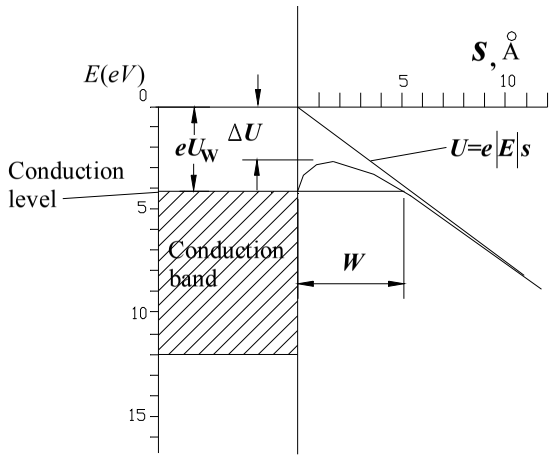

Quantum diffusion

$$D \approx \exp\left[-\frac{4\sqrt{2m}}{3\hbar eE}\left(eU_W - e\sqrt{eE}\right)^{3/2}\right]$$

$$E \approx \frac{4\pi\varepsilon_0 U_W^2}{e} \cong 17 GeV/m$$

$$\gamma\varepsilon \cong 10^{-7} cm \cdot 10^{-2} rad = 10^{-9} cm \cdot rad$$

$$U_F \approx 5V$$

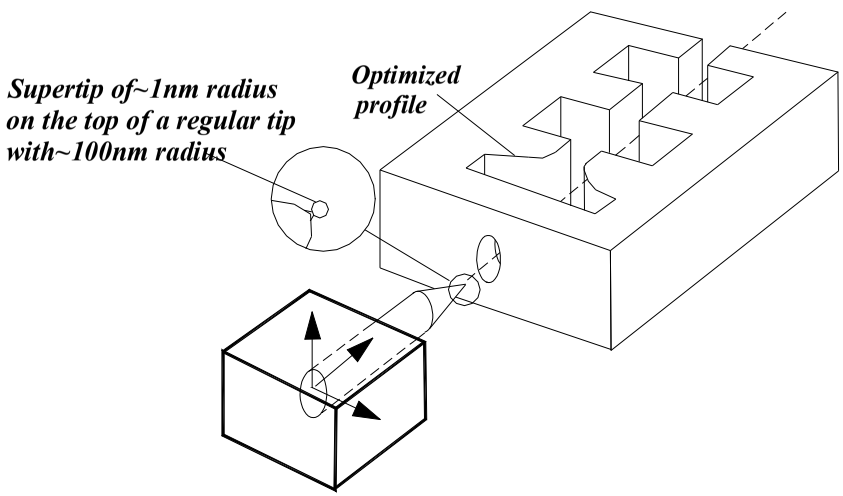

STAGING FOR PROF OF PRINCIPLE EXPERIMENT

1) Assemble a sweeping device
2) Assemble a pulser
3) Demonstrate sweeping (line on the screen)
4) Demonstrate higher level of damage while the laser beam is swept
5) Fabricate accelerating structure at Nano-Factory
6) Investigate reflection with tunable low power laser
7) Fabricate a nano-mover
8) Fabricate a source of electrons with small emittance based on micro-tip
9) Complete setup
10) Demonstrate acceleration
11) Cost estimation could be done at this stage

Parallel jobs are possible (marked by color)

CONCLUSIONS

- Nano–technology available creates solid base for accelerator with Travelling Laser Focus.
- Any point on accelerating structure remains illuminated by ~0.3 *ps* only. Laser density <0.3 J/cm^2
- Lasers for the TLF method need to operate with pulse duration ~100ps.
- TLF method promises up to 10 *TeV/km* with 3 *mJ/m.* With such high gradients, $\mu^+\mu^-$, $\pi^+\pi^-$ $\pi p, \mu p$ and ion-ion collisions become feasible.
- We conclude that acceleration in a laser-driven linac with TLF method is a present day technology and no physical and technical limitations found on this way.
- **Testing this method might be highest priority task for accelerator physics.**

Publications on the TLF method

- **Laser Driven Linear Collider.**
  A.A. Mikhailichenko, (Cornell U., Phys. Dept.) . EPAC08-WEPP155, Jun 25, 2008. 3pp.
  In the Proceedings of 11th European Particle Accelerator Conference (EPAC 08), Magazzini del Cotone, Genoa, Italy, 23-27 Jun 2008, pp WEPP155.
- **Laser driven linear collider.**
  A.A. Mikhailichenko, (Cornell U., Phys. Dept.) . Jun 2006. 3pp.
  Prepared for European Particle Accelerator Conference (EPAC 06), Edinburgh, Scotland, 26-30 Jun 2006.
  Published in *Edinburgh 2006, EPAC* 2523-2525
- **Fast sweeping device for laser bunch.**
  A. Mikhailichenko, (Cornell U., LEPP) . CBN-05-06, PAC-2005-TPAE011, Mar 2005. 13pp.
  In the Proceedings of Particle Accelerator Conference (PAC 05), Knoxville, Tennessee, 16-20 May 2005, pp 1219. Also in *Knoxville 2005, Particle Accelerator Conference* 1219
- **Short X and Gamma Production with Swept Laser Bunch.**
  A. Mikhailichenko, (Cornell U., LNS) . PAC03-TPPG006, May 2003.
  In the Proceedings of Particle Accelerator Conference (PAC 03), Portland, Oregon, 12-16 May 2003, pp 1825.
- **Particle acceleration in microstructures.**
  A.A. Mikhailichenko, (Cornell U., LNS) . SNOWMASS-2001-T401, Jun 2001. 32pp.
  Prepared for APS / DPF / DPB Summer Study on the Future of Particle Physics (Snowmass 2001), Snowmass, Colorado, 30 Jun - 21 Jul 2001.
  In the Proceedings of APS / DPF / DPB Summer Study on the Future of Particle Physics (Snowmass 2001), Snowmass, Colorado, 30 Jun - 21 Jul 2001, pp T401.
- **Particle acceleration in microstructures excited by laser radiation: Basic principles.**
  A.A. Mikhailichenko, (Cornell U., LNS) . CLNS-00-1662, Feb 2000. 89pp.
  Based on a talk given at Accelerator Physics Seminar, Wilson Laboratory, May 28, 1999.
- **Table top accelerator with extremely bright beam.**
  A. Mikhailichenko, (Cornell U., LNS) . Jun 2000. 9pp.
  To appear in the proceedings of 9th Workshop on Advanced Accelerator Concepts (AAC 2000), Santa Fe, New Mexico, 10-16 Jun 2000.
  Published in **AIP Conf.Proc.569:881-889,2000**. Also in *Santa Fe 2000, Advanced accelerator concepts* 881-889
- **A beam focusing system for a linac driven by a traveling laser focus.**
  A.A. Mikhailichenko, (Novosibirsk, IYF) . 1995.
  In the Proceedings of 16th IEEE Particle Accelerator Conference (PAC 95) and International Conference on High-energy Accelerators (IUPAP), Dallas, Texas, 1-5 May 1995, pp 784-786.
- **Laser linear collider with a travelling laser focus supply.**
  A.A. Mikhailichenko, (Cornell U., LNS) . CBN-99-18, 1999. 3pp.
  Published in the proceedings of the Particle Accelerator Conference PAC99, 1999, pp.3633-3635.
  To be published in the proceedings of IEEE Particle Accelerator Conference (PAC 99), New York, New York, 29 Mar - 2 Apr 1999.
  Published in *New York 1999, Particle Accelerator, vol. 5* 3633-3635
- **Injector for a laser linear collider.**
  A.A. Mikhailichenko, (Cornell U., LNS) . CLNS-98-1568, Jul 1998. 11pp.
  Presented at 8th Advanced Accelerator Concepts Workshop, Baltimore, Maryland, 6-11 Jul 1998.
  Published in **AIP Conf.Proc.472:891-900,1999**.
- **A Laser linear collider design.**
  A.A. Mikhailichenko, (Cornell U., LNS) . CLNS-98-1562, Jun 1998. 16pp.
  Prepared for Advanced Accelerator Concepts Workshop, Baltimore, MD, 6-11 Jul 1998.
  Published in **AIP Conf.Proc.472:615-625,1999**.
- **Laser acceleration: A Practical approach.**
  A.A. Mikhailichenko, (Cornell U., LNS) . CLNS-97-1529, Nov 1997. 28pp.
  Talk given at 20th International Conference on Lasers and Applications (Lasers '97), New Orleans, LA, 15-19 Dec 1997.
- **On the physical limitations to the lowest emittance. (Toward colliding electron positron crystalline beams).**
  A.A. Mikhailichenko, (Cornell U., LNS) . CLNS-96-1436, Oct 1996. 7pp.
  Prepared for 7th Workshop on Advanced Accelerator Concepts, Lake Tahoe, CA, 13-19 Oct 1996.
  Published in **AIP Conf.Proc.398:294-300,1997**.
- **The Concept of a linac driven by a traveling laser focus.**
  A.A. Mikhailichenko, (Cornell U., LNS) . CLNS-96-1437, Oct 1996. 16pp.
  Given at 7th Workshop on Advanced Accelerator Concepts, Lake Tahoe, CA, 13-19 Oct 1996.
  Published in **AIP Conf.Proc.398:547-563,1997**.
- **Excitation of the grating by moving focus of the laser beam.**
  A.A. Mikhailichenko, (Novosibirsk, IYF) . 1994. 3pp.
  Published in EPAC 94: Proceedings. Edited by V. Suller and Ch. Petit-Jean-Genaz. River Edge, N.J., World Scientific, 1994. p. 802.
  In the Proceedings of 4th European Particle Accelerator Conference (EPAC 94), London, England, 27 Jun - 1 Jul 1994, pp 802-804. Also in *London 1994, EPAC 94, vol. 1* 802-804

Backup slides

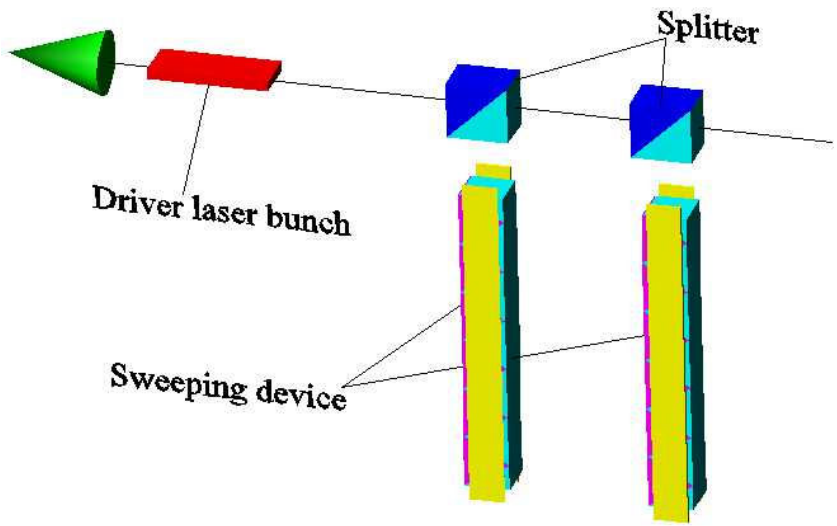
Splitter
Driver laser bunch
Sweeping device

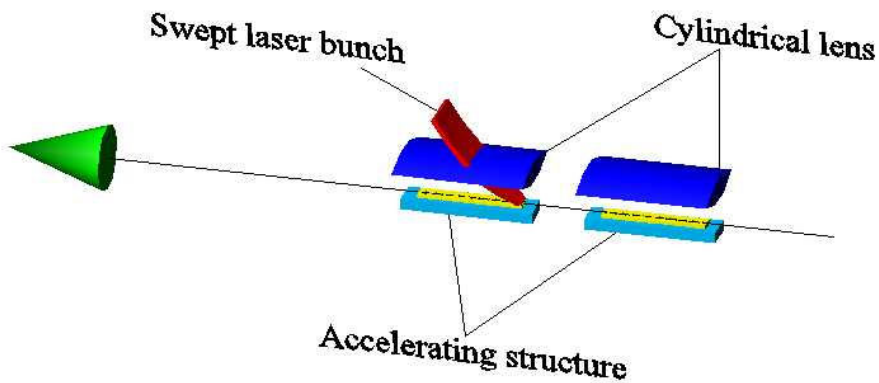
Swept laser bunch
Cylindrical lens
Accelerating structure

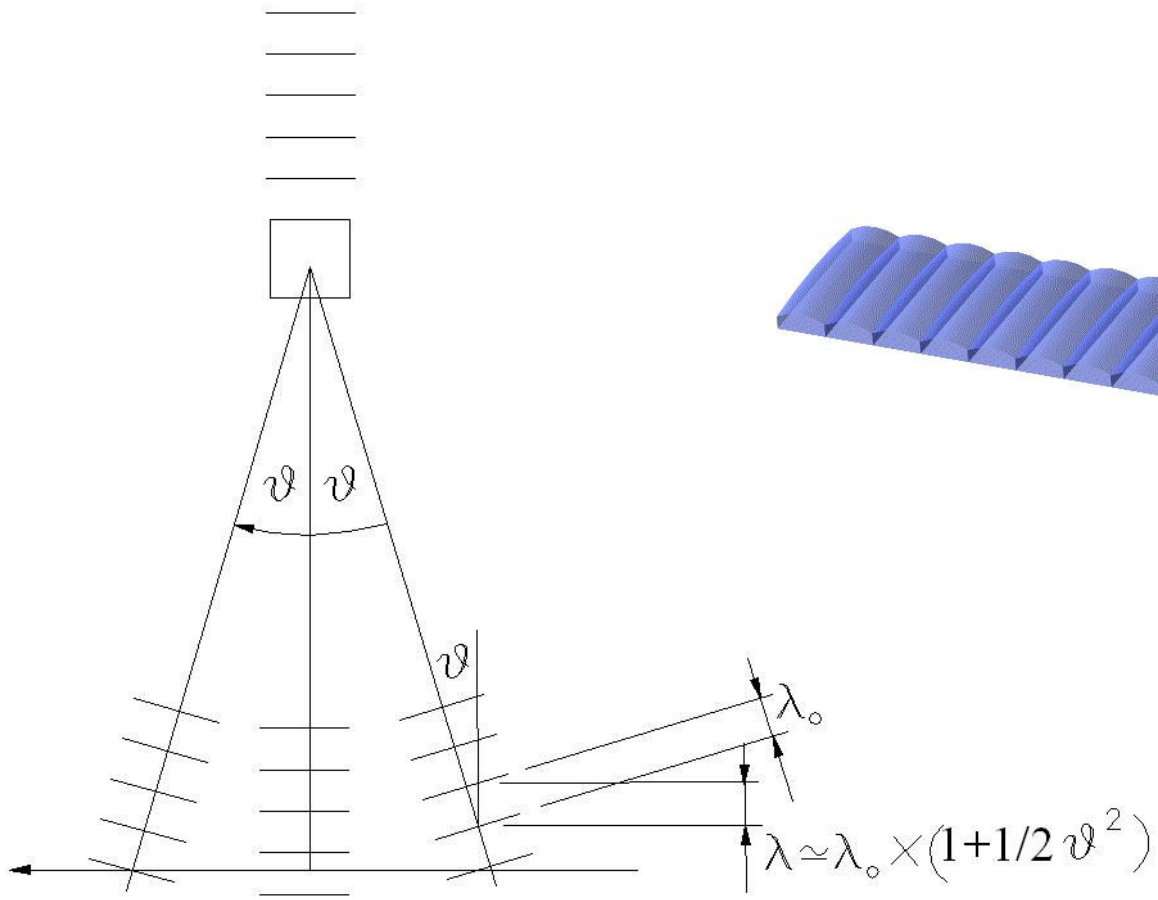
ϑ
ϑ
ϑ
λ∘
λ≃λ∘×(1+1/2 ϑ²)

An example.

From "Study of Vibrations and Stabilization at the Sub-Nanometer Scale for CLIC Final Doublets", by B.Bolzon, Nanobeam 08, Novosibirsk

19

Active isolation from the ground: commercial system

Presentation of the STACIS commercial system

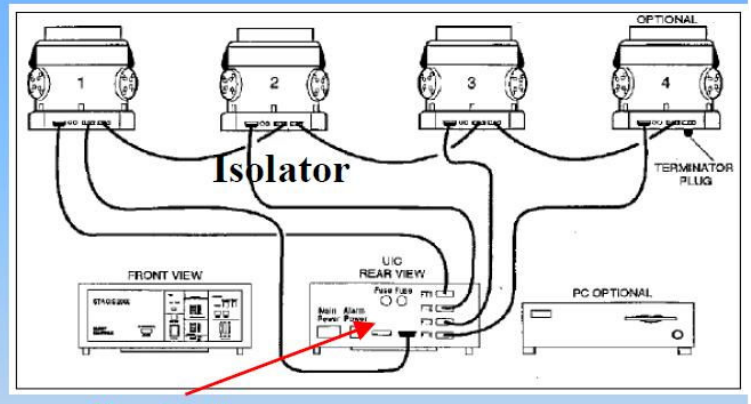

Controller :
Control actuators from geophone data

Isolator:

- ✓ Elastomer: **Passive isolation**
- ✓ 1 geophone / 1 vertical actuator
- ✓ 2 geophones / 2 horizontal actuators
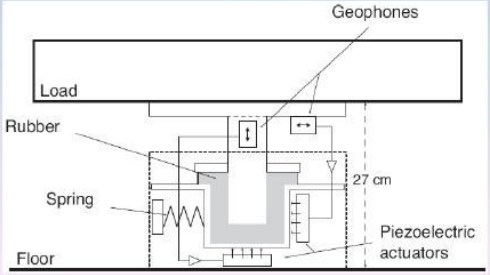
} **Active isolation**