PAMELA – A Novel Accelerator for Charged Particle Therapy

H Witte

John Adams Institute for Accelerator Science, Keble Road, Oxford, OX1 3RH, UK

Overview

- Motivation
  - Cancer treatment
  - The situation in the UK
- PAMELA
  - General concept
- Development status and technological challenges
  - Main accelerator magnets: Helical Coils
  - Extraction
- Summary

MOTIVATION

Incidence of Cancer in the UK

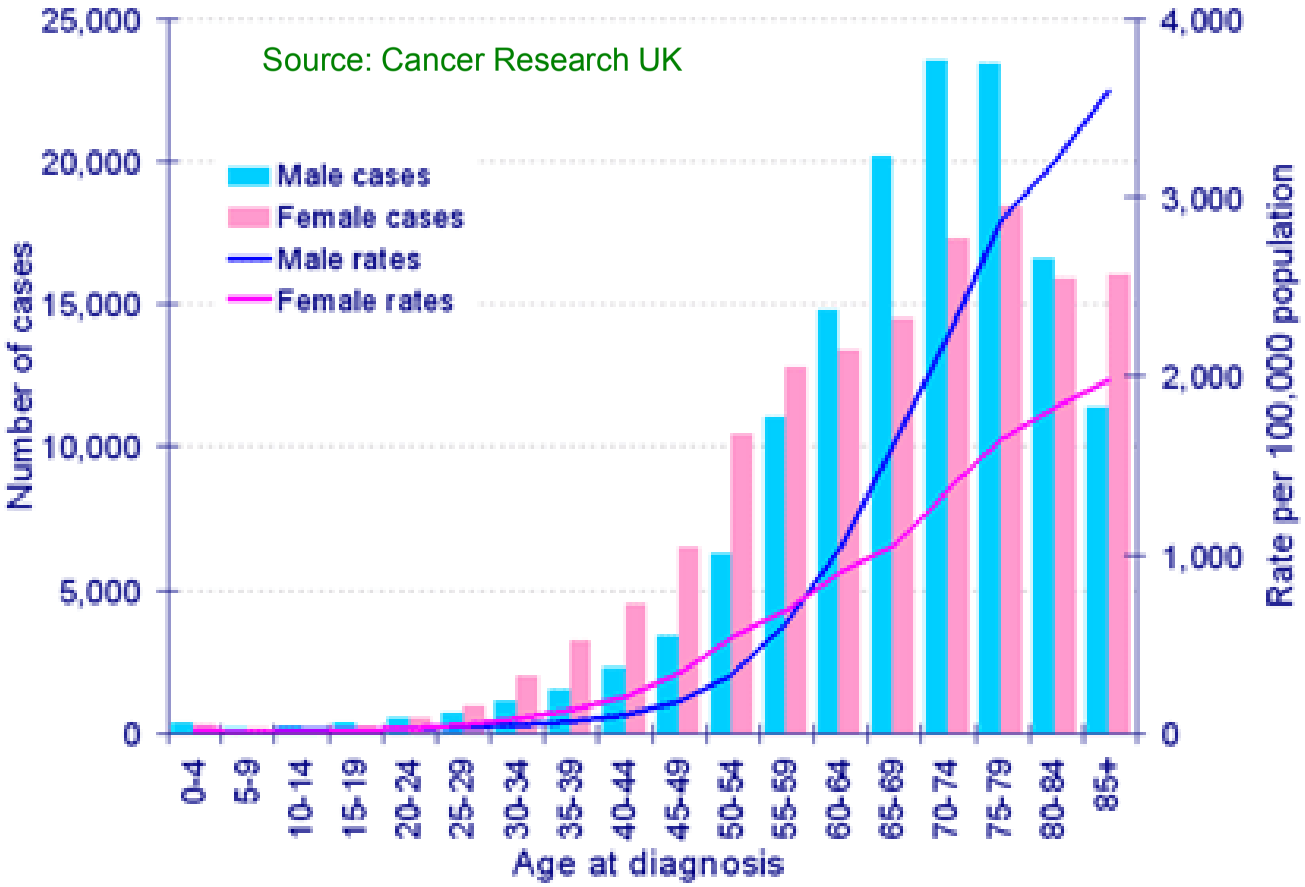

- 12.5% probability, all types (except skin cancer) by 65
  - Rises to more than 1/3rd for whole-life
  - Around half are associated with specific risks

Motivation

- Radiation treatment is very effective
  - [Statistics show that of those cured...]
    "49% are cured by surgery,
  - **40% by radiotherapy** and
  - 11% by chemotherapy".
    The Royal College of Radiologists, BFCO(03)3, (2003).
- Cancer treatment
  - In 40-50% of all cases radiotherapy is part of the treatment plan
- Motivation for protons and light ions: most of energy deposited in Bragg peak

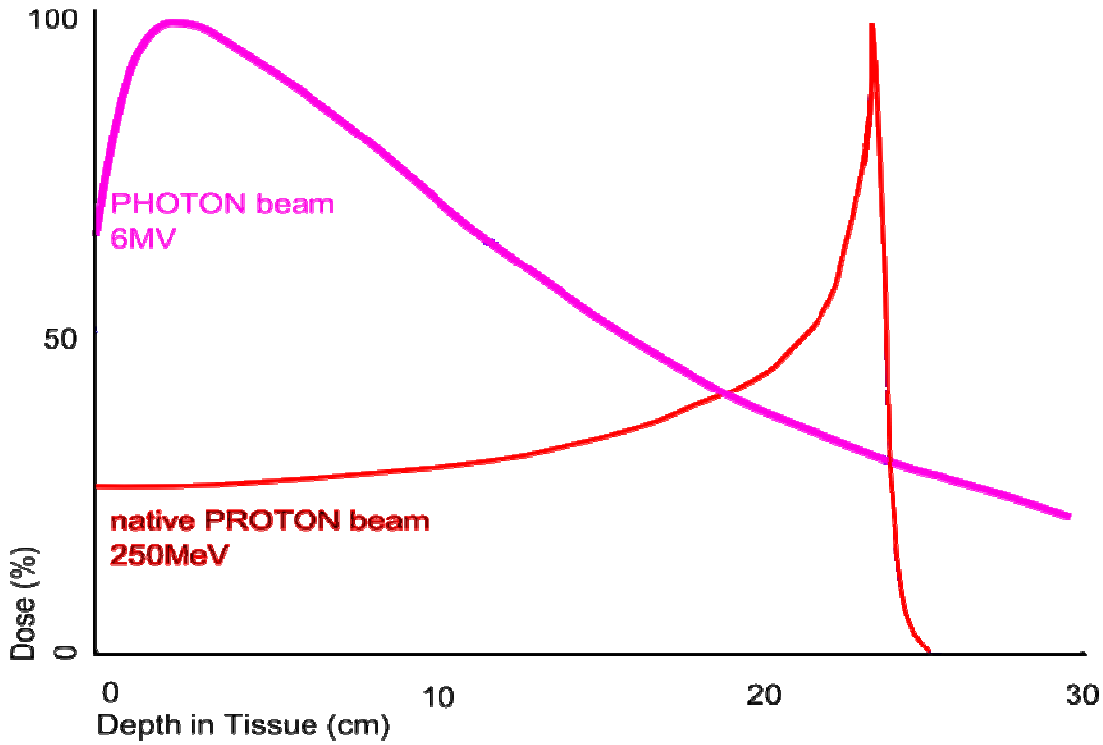

Medulloblastoma in a child

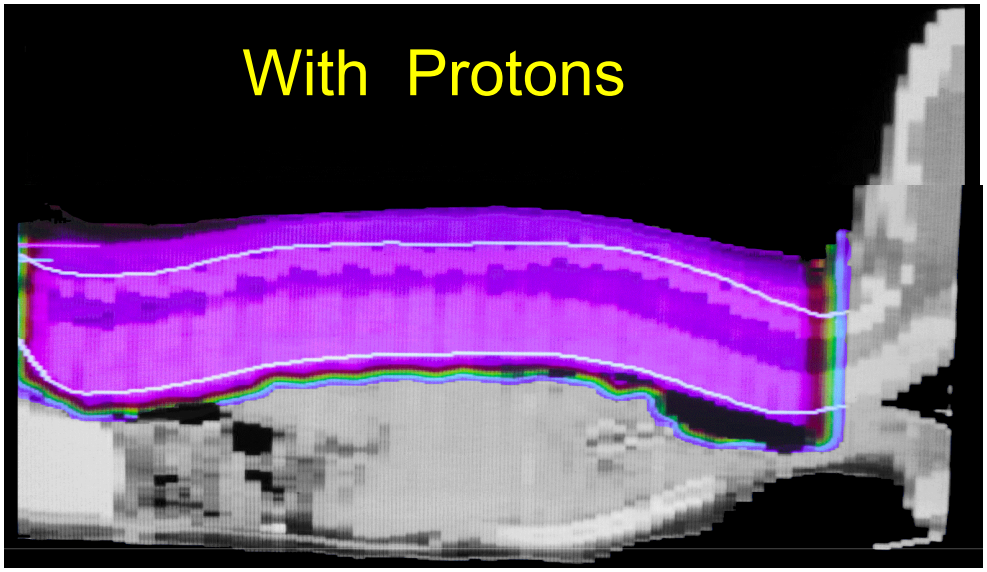

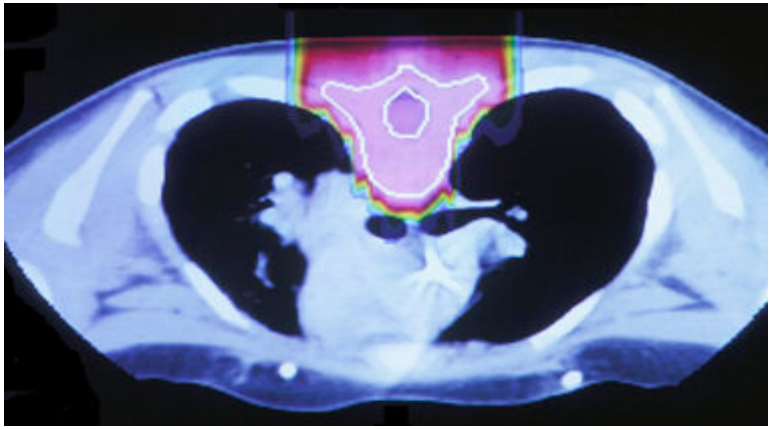

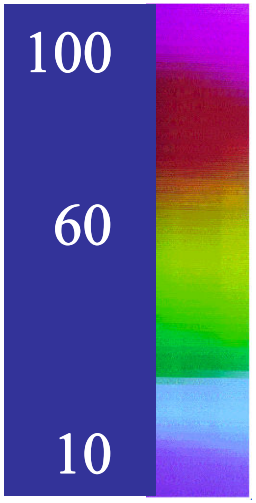

"When proton therapy facilities become available it will become malpractice not to use them for children [with cancer]."

Herman Suit, M.D., D.Phil.
Chair, Radiation Medicine
Massachusetts General Hospital

Why use Carbon?

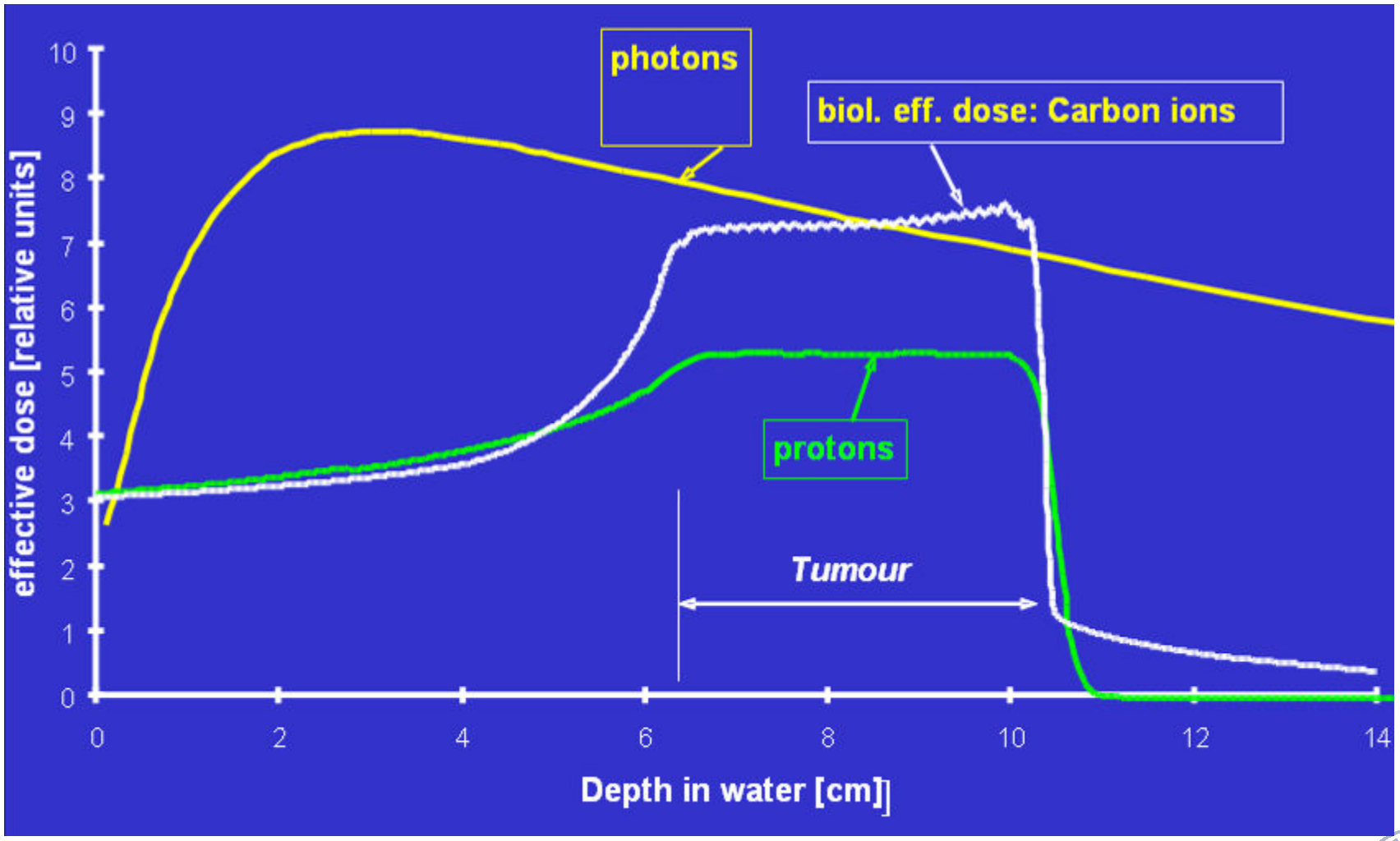

The Situation in the UK

Facilities in operation:

WHERE		WHAT	FIRST PATIENT	PATIENT TOTAL	DATE OF TOTAL	
Canada	Vancouver (TRIUMF)	p	1995	130	Dec-07	eyes only
China	Wanjie (WPTC)	p	2004	537	Dec-07	
England	Clatterbridge	p	1989	1701	Dec-07	eyes only
France	Nice (CAL)	p	1991	3129	Sep-06	
France	Orsay (CPO)	p	1991	4143	Dec-07	
Germany	Darmstadt (GSI)	C ion	1997	384	Oct-07	
Germany	Berlin (HMI)	p	1998	1014	Dec-07	
Italy	Catania (INFN-LNS)	p	2002	151	Dec-07	eyes only
Japan	Chiba (HIMAC)	C ion	1994	3795	Jan-08	
Japan	Kashiwa (NCC)	p	1998	552	Dec-07	
Japan	Hyogo (HIBMC)	p	2001	1658	Dec-07	
Japan	Hyogo (HIBMC)	C ion	2002	271	Dec-07	
Japan	Tsukuba (PMRC, 2)	p	2001	1188	Dec-07	
Japan	WERC	p	2002	49	Dec-07	
Japan	Shizuoka	p	2003	570	Dec-07	
Korea	Ilsan, Korea	p	2007	155	Dec-07	
Russia	Moscow (ITEP)	p	1969	4024	Dec-07	
Russia	St. Petersburg	p	1975	1327	Dec-07	
Russia	Dubna (JINR, 2)	p	1999	402	Dec-07	
South Africa	iThemba LABS	p	1993	500	Dec-07	
Sweden	Uppsala (2)	p	1989	840	Dec-07	
Switzerland	Villigen PSI (72 MeV-Optis)	p	1984	4875	Dec-07	eyes only
Switzerland	Villigen PSI (230 MeV)	p	1996	320	Dec07	
CA., USA	UCSF - CNL	p	1994	920	Mar-07	
CA., USA	Loma Linda (LLUMC)	p	1990	12689	Mar-08	
IN., USA	Bloomington (MPRI, 2)	p	2004	379	Dec-07	
MA., USA	Boston (NPTC)	p	2001	2710	Oct-07	
TX, USA	Houston	p	2006	527	Jan-08	
FL, USA	Jacksonville	p	2006	360	Dec-07	
				49300	**Total**	

PAMELA

Particle Accelerator for Medical Applications

CONFORM

- The **CO**nstruction of a **N**on-scaling **F**FAG for **O**ncology, **R**esearch and **M**edicine
  - EMMA (Electron Model with Many Applications)
  - PAMELA
  - Applications
    - Look for other applications of ns-FFAGs
- History
  - Start: September 2005; PPARC KITE Club Meeting
  - October 2005, Radiation, Oncology & Biology Department, Oxford
    - Agreed to bid for EMMA and PAMELA to Basic Technology Fund
  - April 4th 2006: Bid submitted
  - November 8th 2006; Basic Technology Panel meeting
    - Awarded in full £8.5M

The Collaboration

John Adams Institute for Accelerator Science

University of Oxford

John Cobb
Bleddyn Jones
Ken Peach
Suzie Sheehy
Holger Witte
Takecheiro Yokoi

Gray Institute
Mark Hill
Boris Vojnovic

- Lattice Design
- Injection
- Extraction
- Magnet Design
- Medical Requirements
- RF

Brunel University West London

Richard Fenning
Akram Khan

- Gantry
- Beam transport

Imperial College London

Morteza Aslaninajad
Matt Easton
Jaroslaw Pasternak
Juergen Pozimski

- Front end
- Injection line
- Ion sources

Science & Technology Facilities Council

Elwyn Baynham
Neil Bliss
Rob Edgecock
Ian Gardner
David Kelliher
Neil Marks
Shinji Machida
Peter McIntosh
Chris Prior

- RF
- Lattice Design
- Magnets

PTCRi

Ken Peach
Bleddyn Jones
Dr Steve Harris
Dr Claire Timlin
P. Wilson
Dr Mark Hill
Boris Vojnovic
Jim Davies
John Hopewell
Gillies McKenna
Roger Berry
Dr Nadia Falzone
Charles Crichton
Daniel Abler
Tracy Underwood
Daniel Warren

PAMELA: Overview

- PAMELA
  - Application driven
  - Concept: NS-FFAG
- Protons and carbon ions
- 2 rings
  - Ring 1: protons and carbon ions
  - Ring 2: carbon

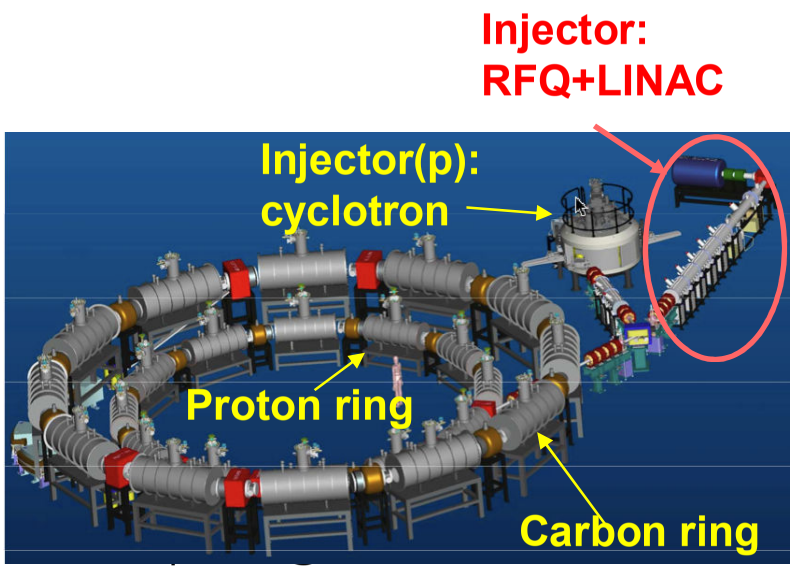

Particle	p,C
Ext Energy:p (MeV)	60~240
Ext Energy:C(MeV/u)	110~450
Dose rate (Gy/min)	>2
Repetition rate(KHz)	0.5~1
Bunch charge:p(pC)	1.6~16
Bunch charge;C(fC)	300~3000
Voxel size (mm)	4×4×4~10×10×10
	Spot scanning
Switching time: p↔c(s)	<1
# of ring	2 (*2nd ring :for C)

Status of PAMELA, T.Yokoi

Scaling/Non-Scaling FFAGs

Scaling FFAG

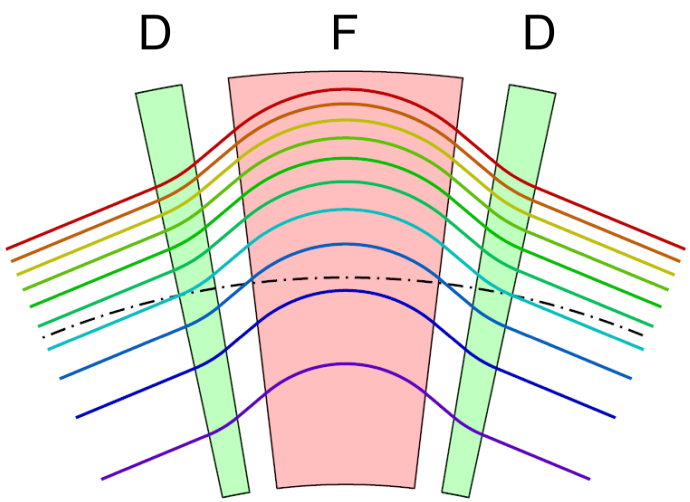

- Tune constant
- Large orbit excursion
- Large magnets

Non-Scaling FFAG

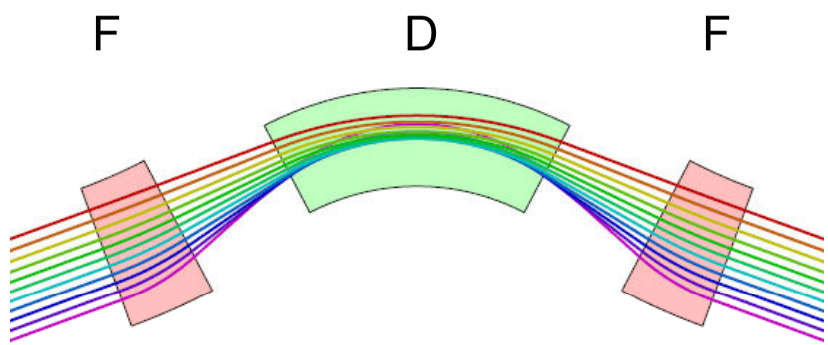

- Tune changes
- Small orbit excursion
- Linear lattice

PAMELA

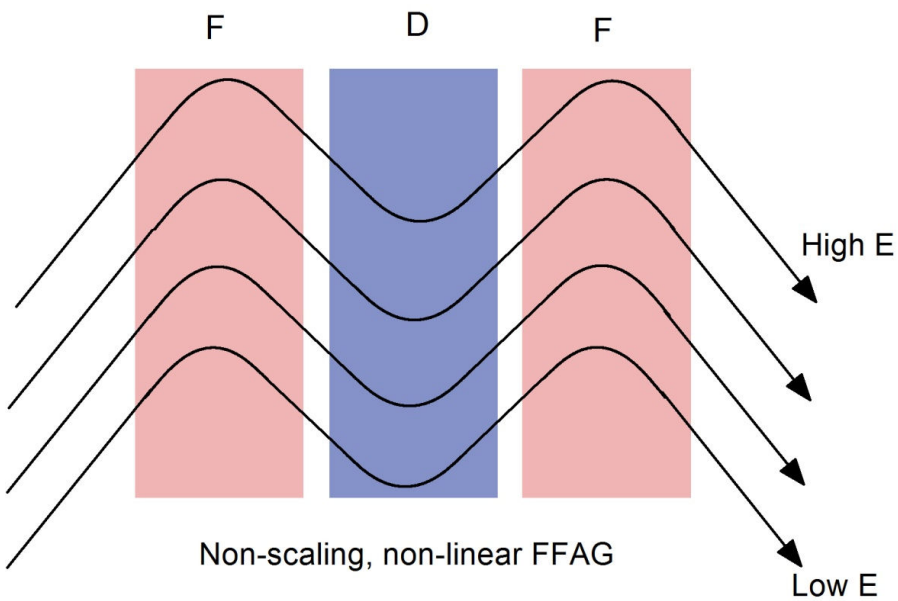

- Rectangular magnets
- Multipoles up to octupole
- High k-value
- Non-scaling, non-linear FFAG
  - Small orbit excursion (<172 mm)
  - Compact magnets
  - No/little tune shift

PAMELA Lattice – Proton Ring

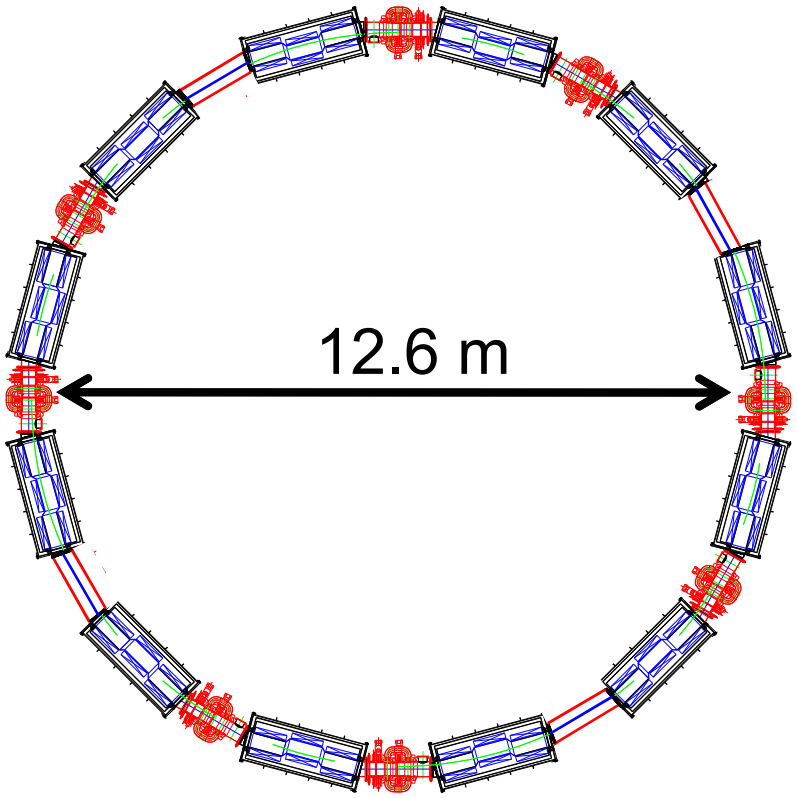

- Proton ring
  - 30 to 250 MeV
  - (carbon 8-68 MeV/u)
- 12 cells, FDF-triplet
  - Straights: 1.7 m
  - Sufficient space
    - Injection/extraction
    - RF

Packing Factor	No. cells	Radius	Orbit Excursion	Straight Section
0.48	12	6.251 m	0.172 m	1.702 m

Shinji Machida, Suzy Sheehy, Takeichiro Yokoi

Working Point and Tunes

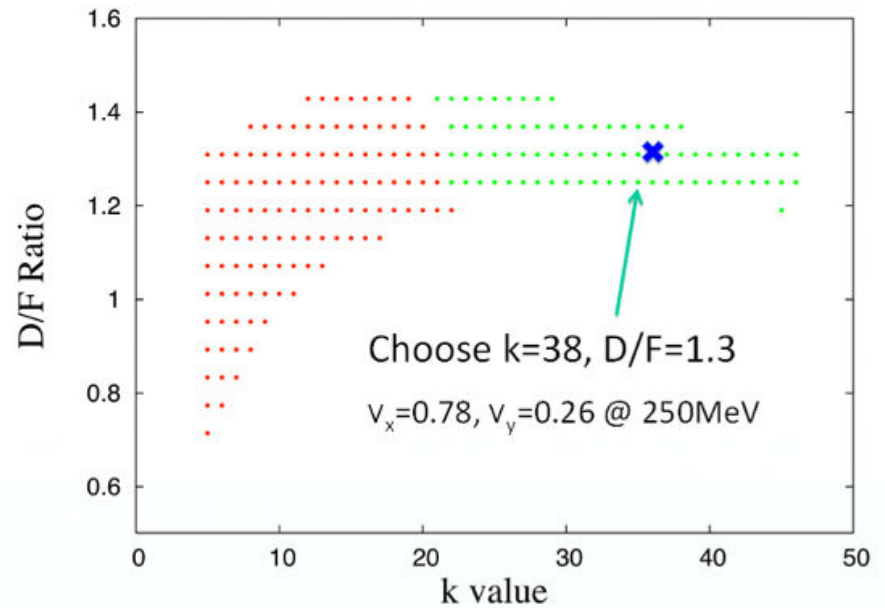

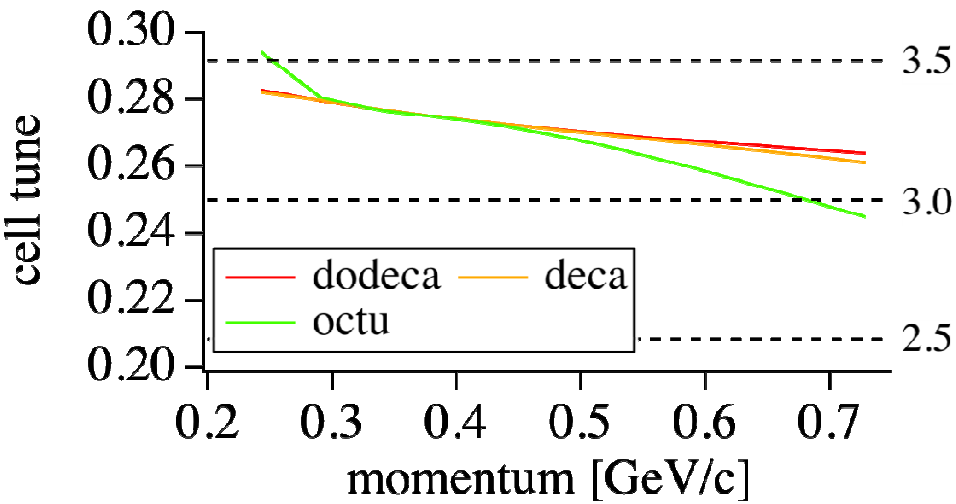

Suzy Sheehy et al. PRST-AB.

- Working point
  - Choose high k to minimize orbit excursion
  - Reasonably far away from instability region
- Total machine tune variation (cell tune variation*12):
  - v_x within 0.1
  - v_y within 0.24
  - Well within an integer!
- Beam blow up
  - Linear lattice: Amplification factor 360
  - Non-linear lattice: 7.6
  - (A = orbit distortion [mm] / 1σ alignment error [mm])
- **Achievable alignment tolerance**

Carbon Ring

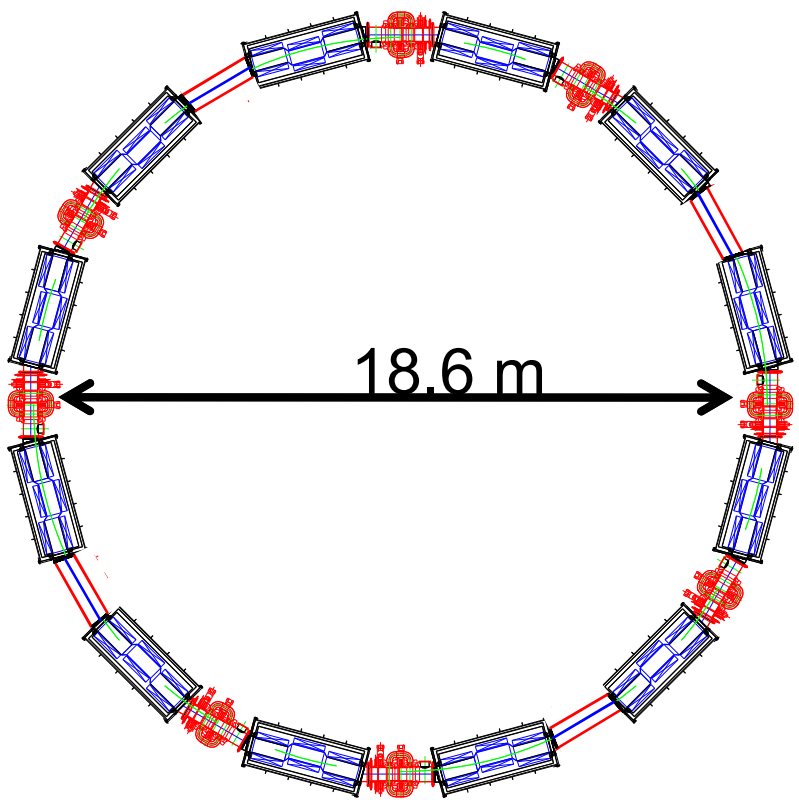

- Carbon ring
  - 68 to 400 MeV/u
- Same concept
- Radius: 9.3 m
- k = 42
- Magnet length: 1.14 m
  - Protons: <0.56 m

Packing Factor	No. cells	Radius	Orbit Excursion	Straight Section
0.65	12	9.3 m	0.246 m	1.2 m

Shinji Machida, Suzy Sheehy, Takeichiro Yokoi

MAGNET CONCEPT

Requirements

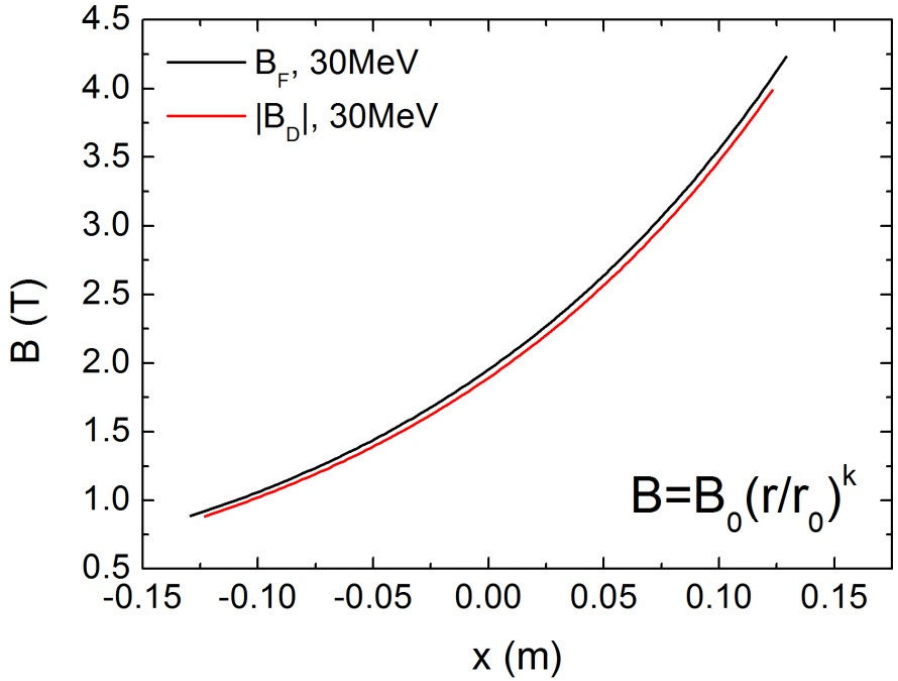

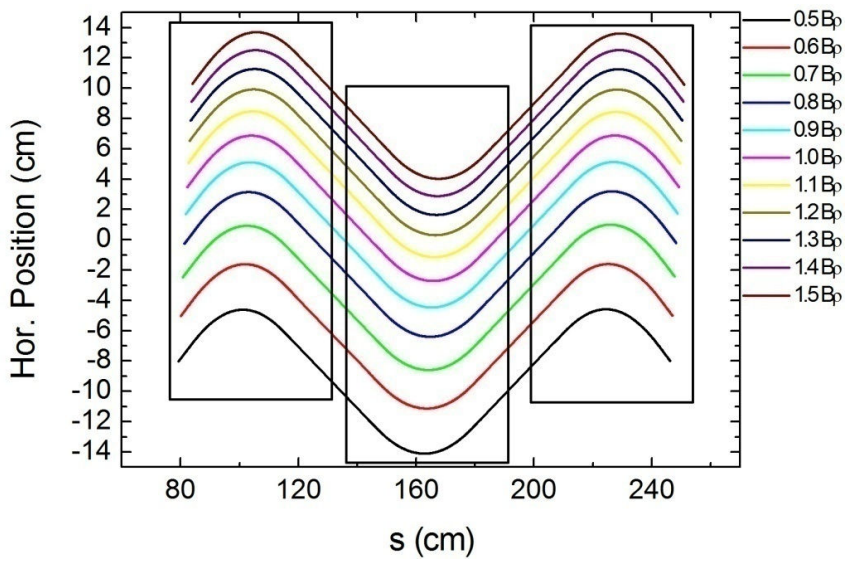

- Non-scaling, non-linear FFAG
  - Consider multipoles up to octupole
- Challenges
  - Maximum field (4.25T)
  - Required bore (>250 mm)
  - Length restriction
  - High k
- Approach: Double-helix coils
  - Known since the 70s

Double-Helix Principle

Geometry:

Double-Helix 1	Double-Helix 2
$x = R\cos(\Theta)$	$x = -R\cos(\Theta)$
$y = R\sin(\Theta)$	$y = -R\sin(\Theta)$
$z = \dfrac{R}{\tan\alpha}\sin(n\Theta)$	$z = -\dfrac{R}{\tan(-\alpha)}\sin(n\Theta)$

Current density:

$\dfrac{Jx}{J_0} = -R\sin(\Theta)$	$\dfrac{Jx}{J_0} = R\sin(\Theta)$
$\dfrac{Jy}{J_0} = R\cos(\Theta)$	$\dfrac{Jy}{J_0} = -R\cos(\Theta)$
$\dfrac{Jz}{J_0} = \dfrac{nR}{\tan\alpha}\cos(n\Theta)$	$\dfrac{Jz}{J_0} = -\dfrac{nR}{\tan(-\alpha)}\cos(n\Theta)$

$$Jx = 0$$
$$Jy = 0$$
$$Jz = const\,\cos(n\Theta)$$

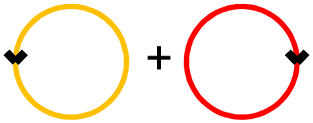

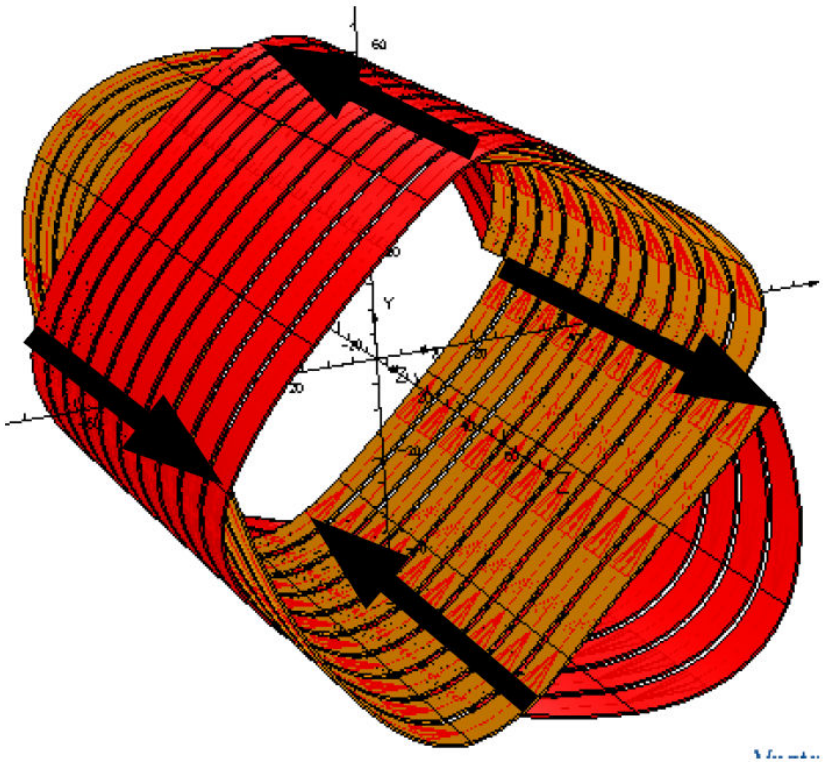

Double-Helix: Combined Function Magnets

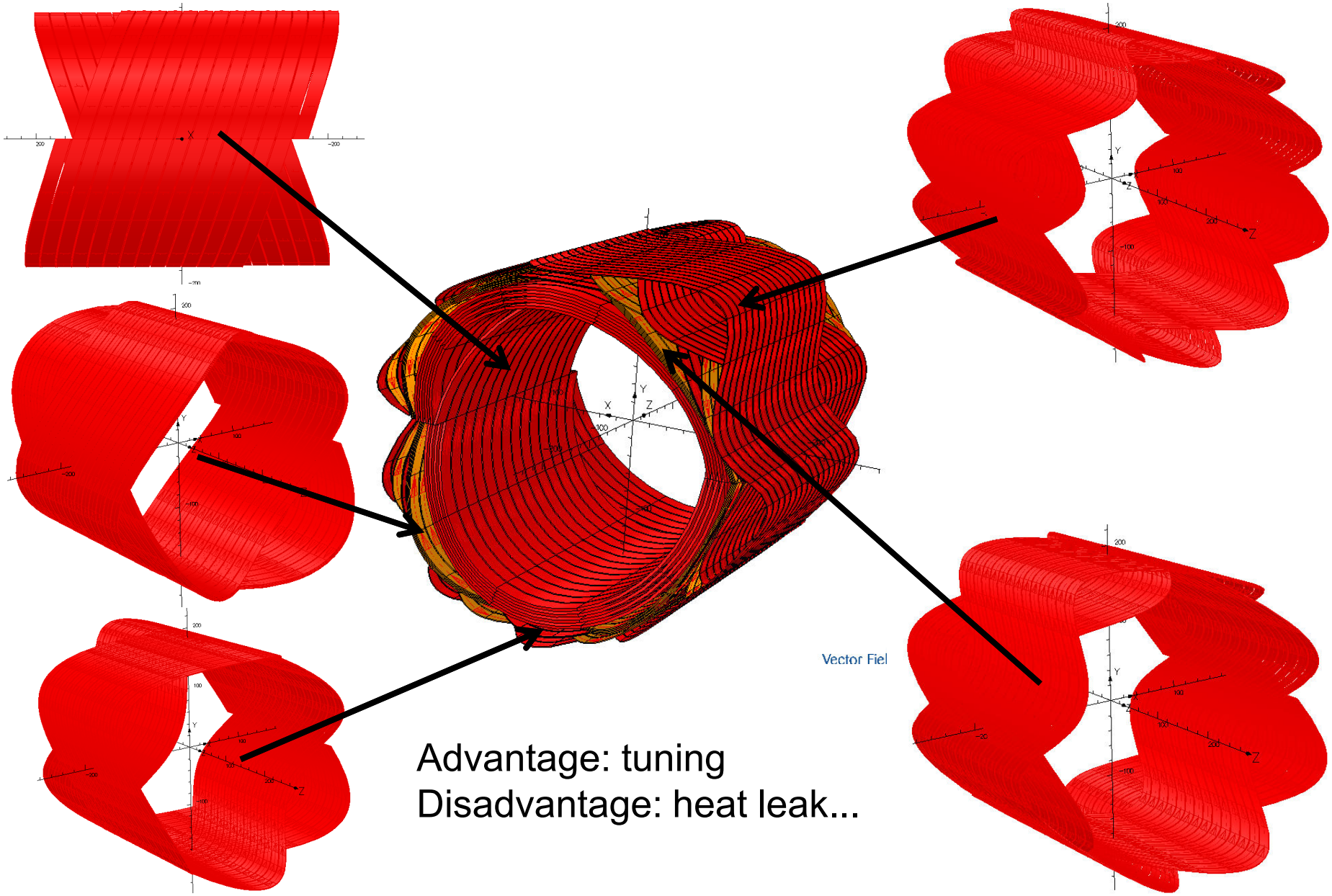

Advantage: tuning
Disadvantage: heat leak...

‘True’ Combined Function Magnets

- Generalization

$$x = R \cdot \cos\Theta$$

$$y = R \cdot \sin\Theta$$

$$z = \frac{h\Theta}{2\pi} + \frac{R}{\tan\alpha}\left(\sum_{n=1}^{N} \varepsilon_n \sin(n\Theta)\right)$$

  – ‘mixing factor’ ε_n

- Advantages
  – One coil with same current
  – Cryogenic advantages
- Disadvantages
  – MP hardwired – trim coils necessary

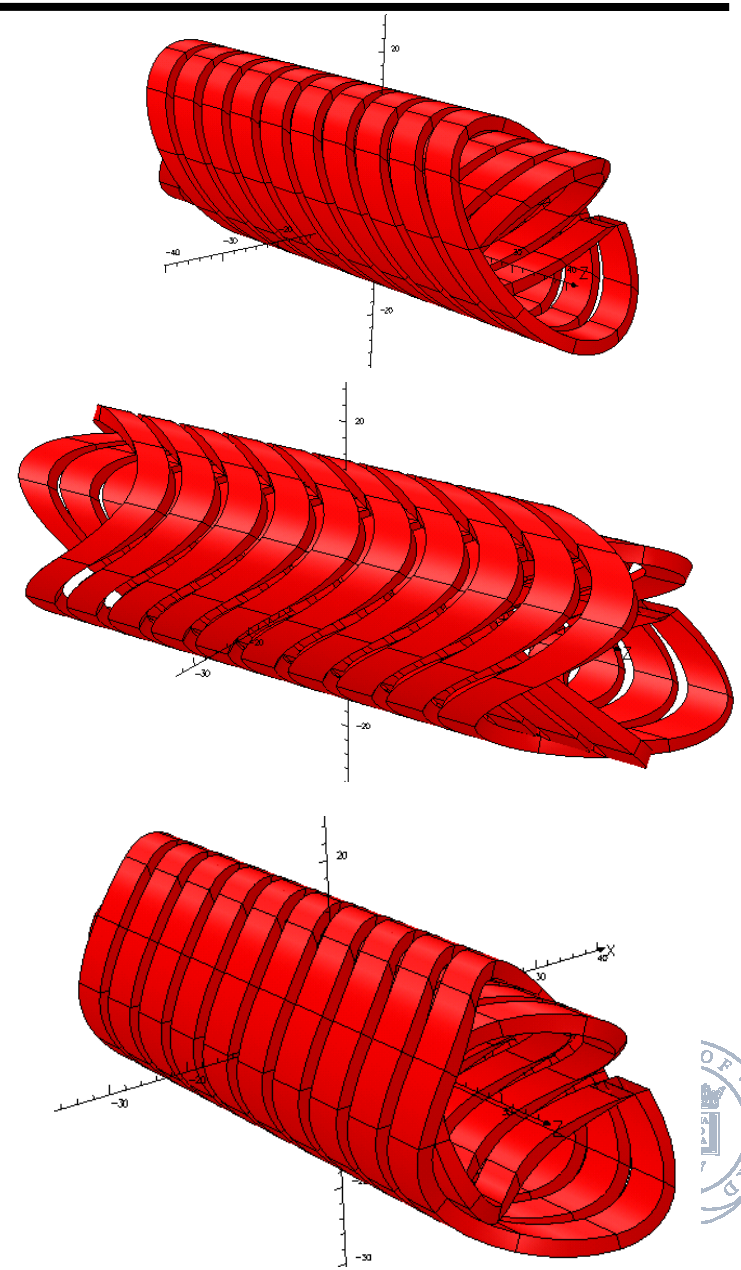

Proton Ring

- Radius former 140 mm
- Length: 535 mm
- Outer radius: 209.2 mm
- J = 268.70 A/mm^2
- Temperature margin: 2K
- 32 layers
- Trim coils: Individual helical coils
  - R=212..234 mm
  - Tunability
    - Dipole: 1%
    - Quadrupole: 4%
    - Sextapole: 6%
    - Octapole: 9%

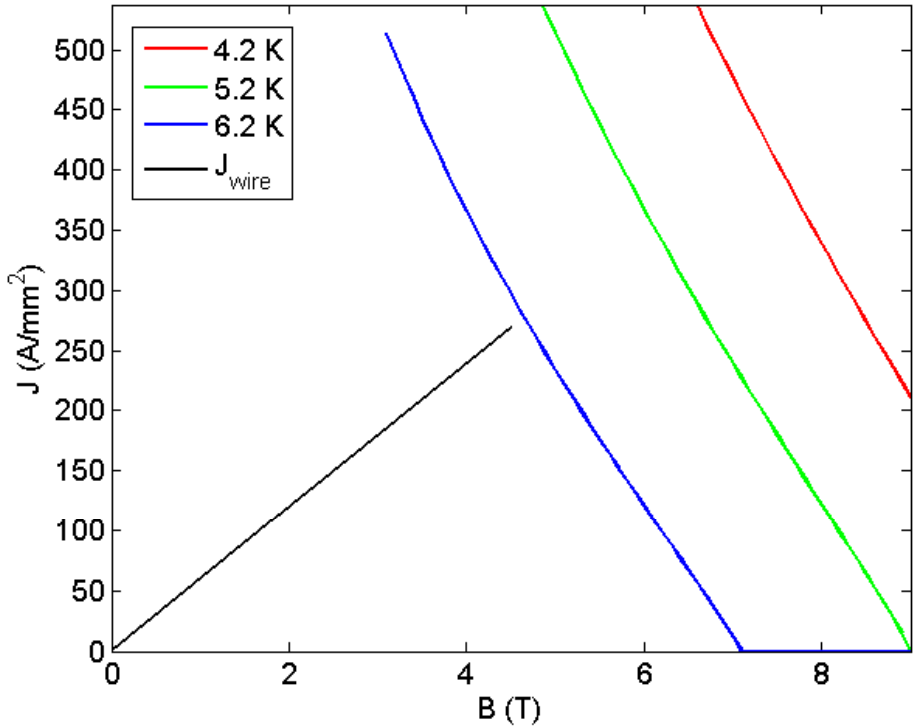

Cu:Sc ratio of 1.35:1
I_c: 1084A at 7T

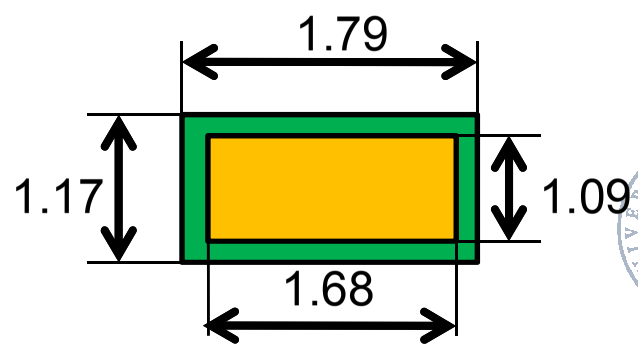

Field Quality Quadrupole

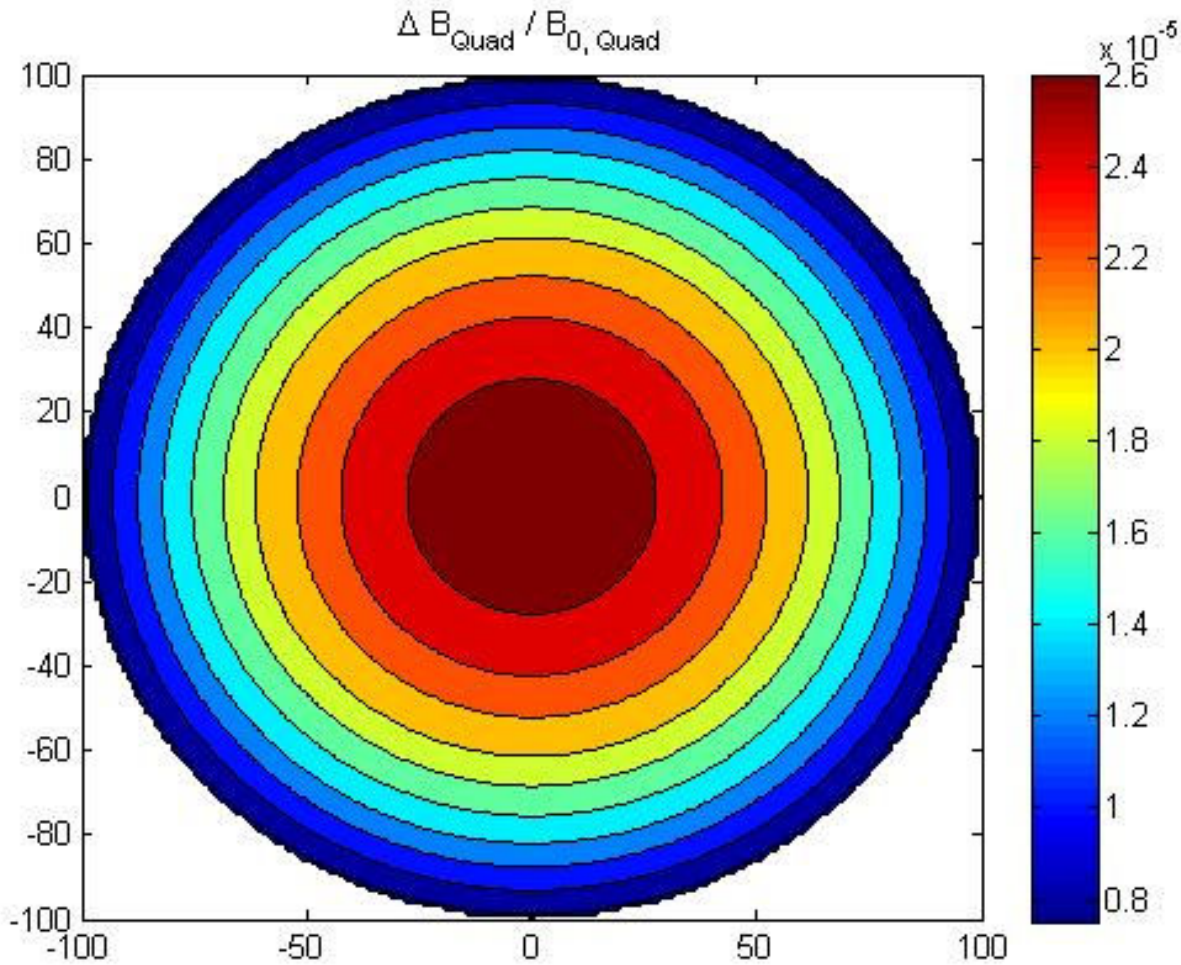

Normal Field Harmonics

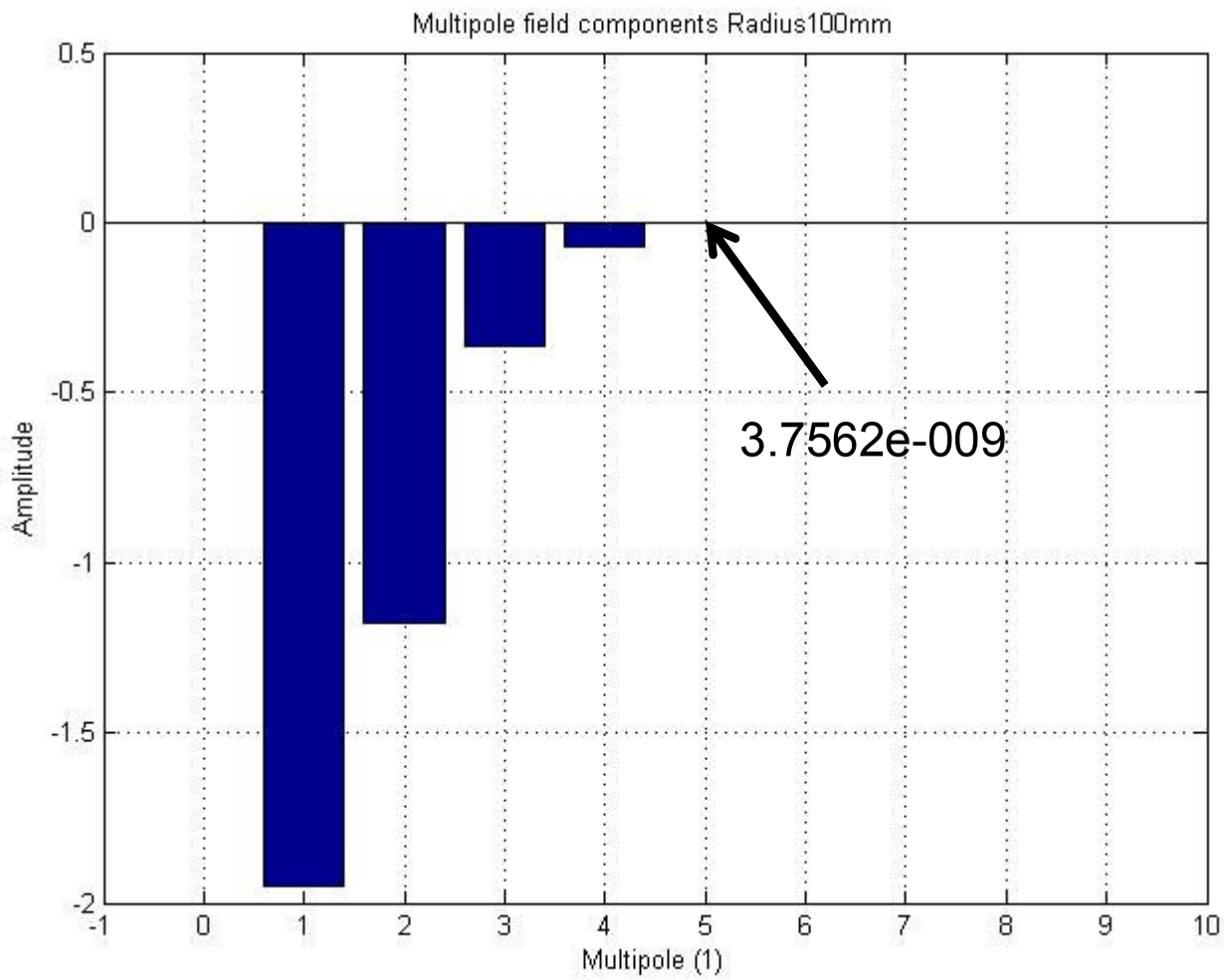

QUADRUPLE HELICAL COILS

Double-Helix Coils

- Vertical field as expected
- Horizontal field perturbed
- Why?
  - Helical coil: solenoidal field + useful field
  - Solenoidal field should cancel out
  - Stray field: uncompensated solenoidal field

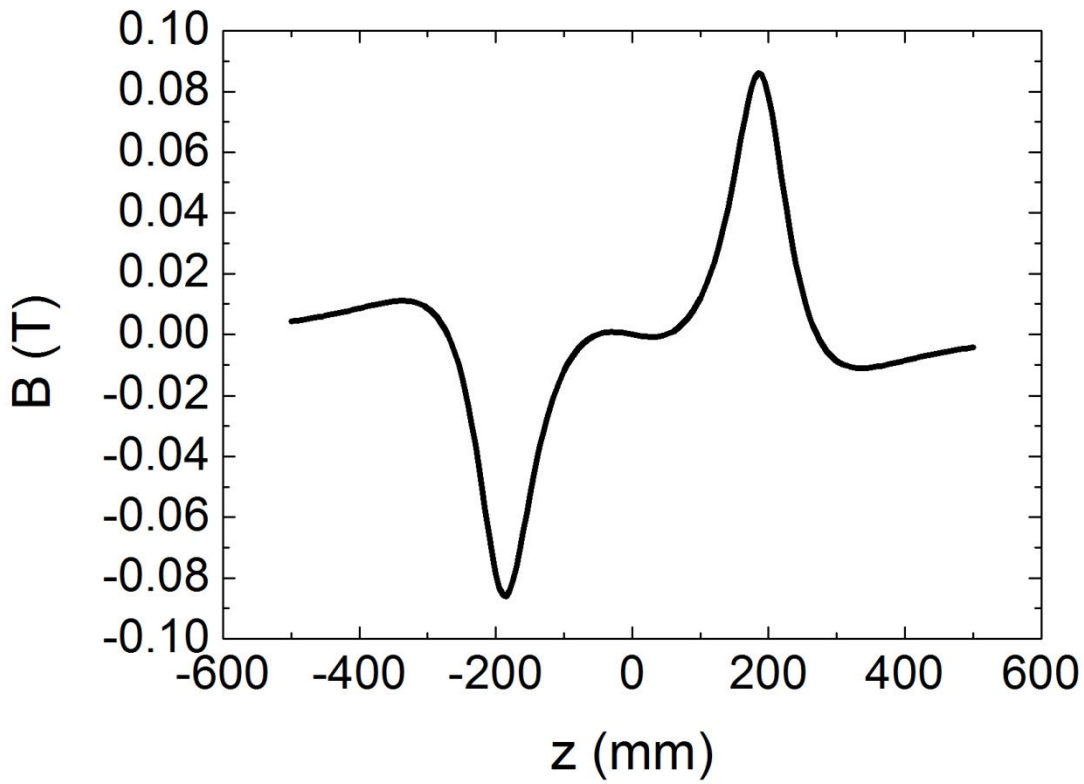

Solenoidal Field

- Solenoids
  - B depends on current (fixed) and radius
- Radius for coils is never the same
  - Always small difference in field
- Quadruple helix
  - Allows compensation

Double Helix (2 times)

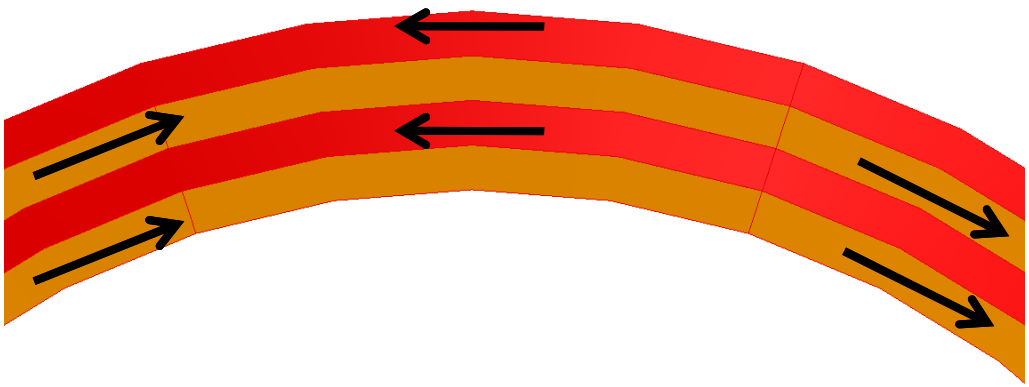

Quadruple Helix

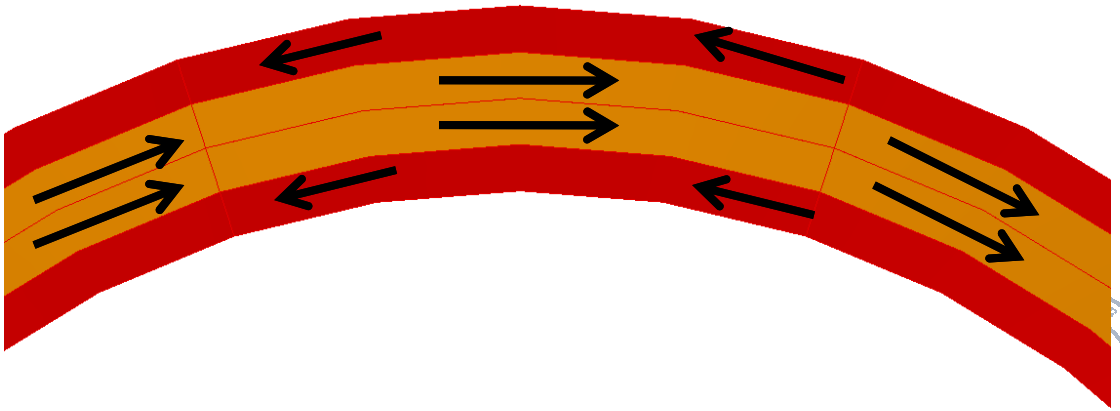

Double/Quadruple Helical Coils

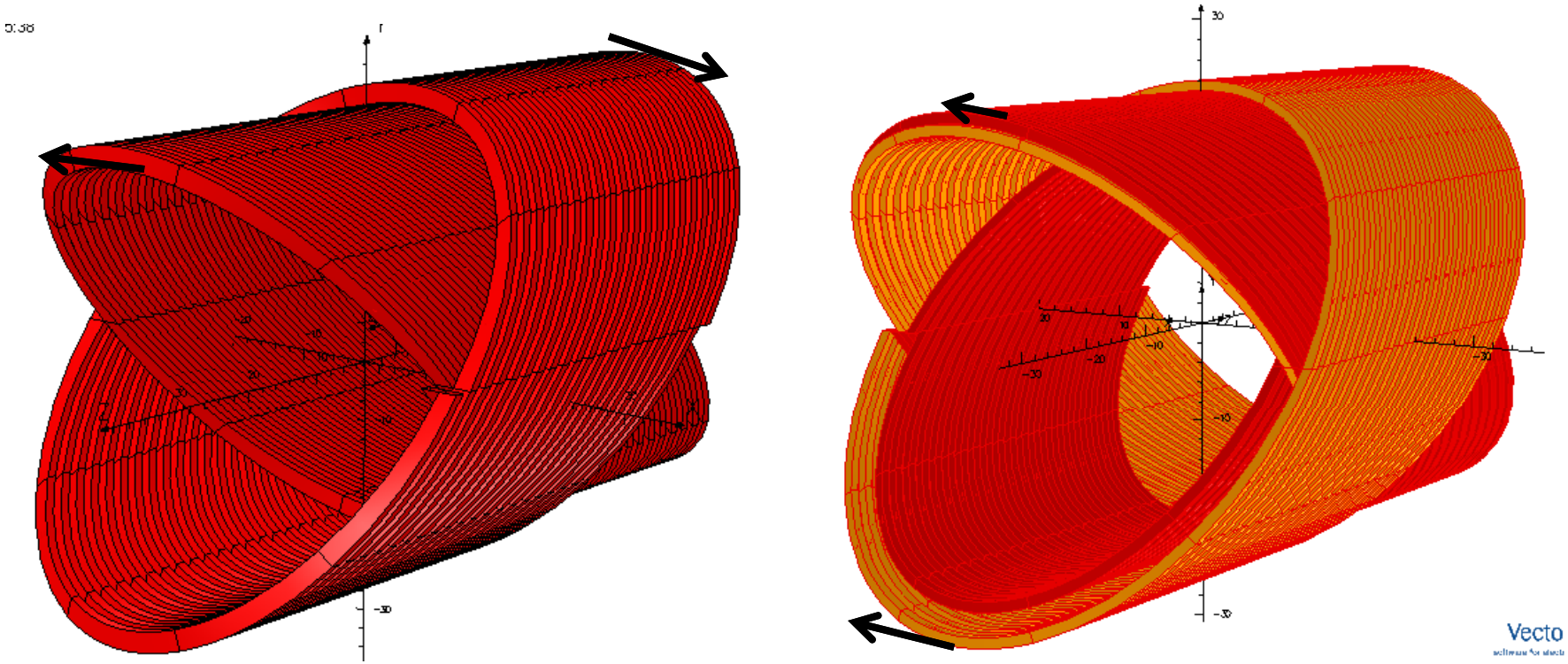

Quadruple helix: two nested double-helix coils, which compensate solenoidal field

Comparison

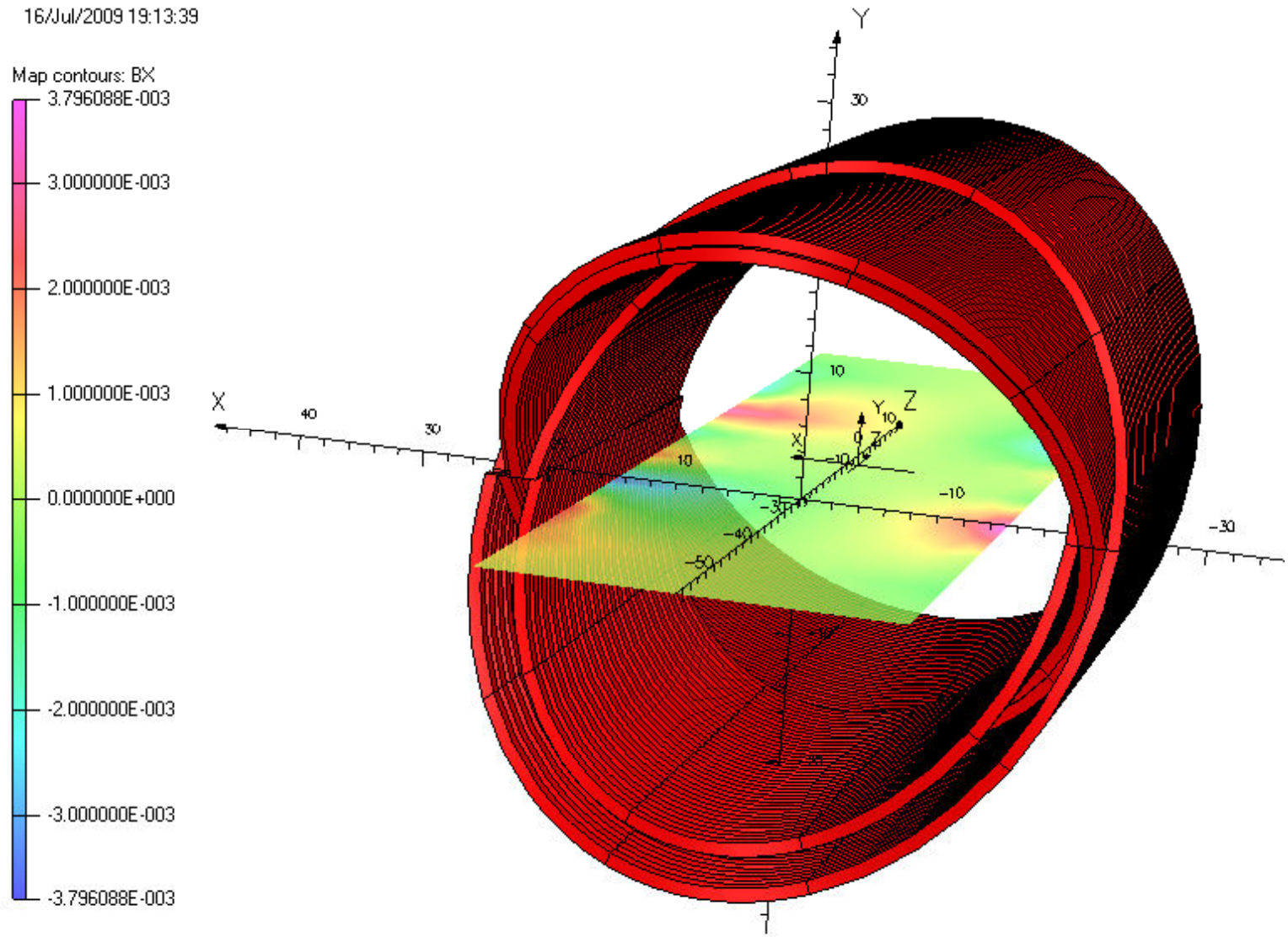

30 mT versus 3 mT!

Tracking – Double-helix vs. Quadruple Helix

Quadruple Helix

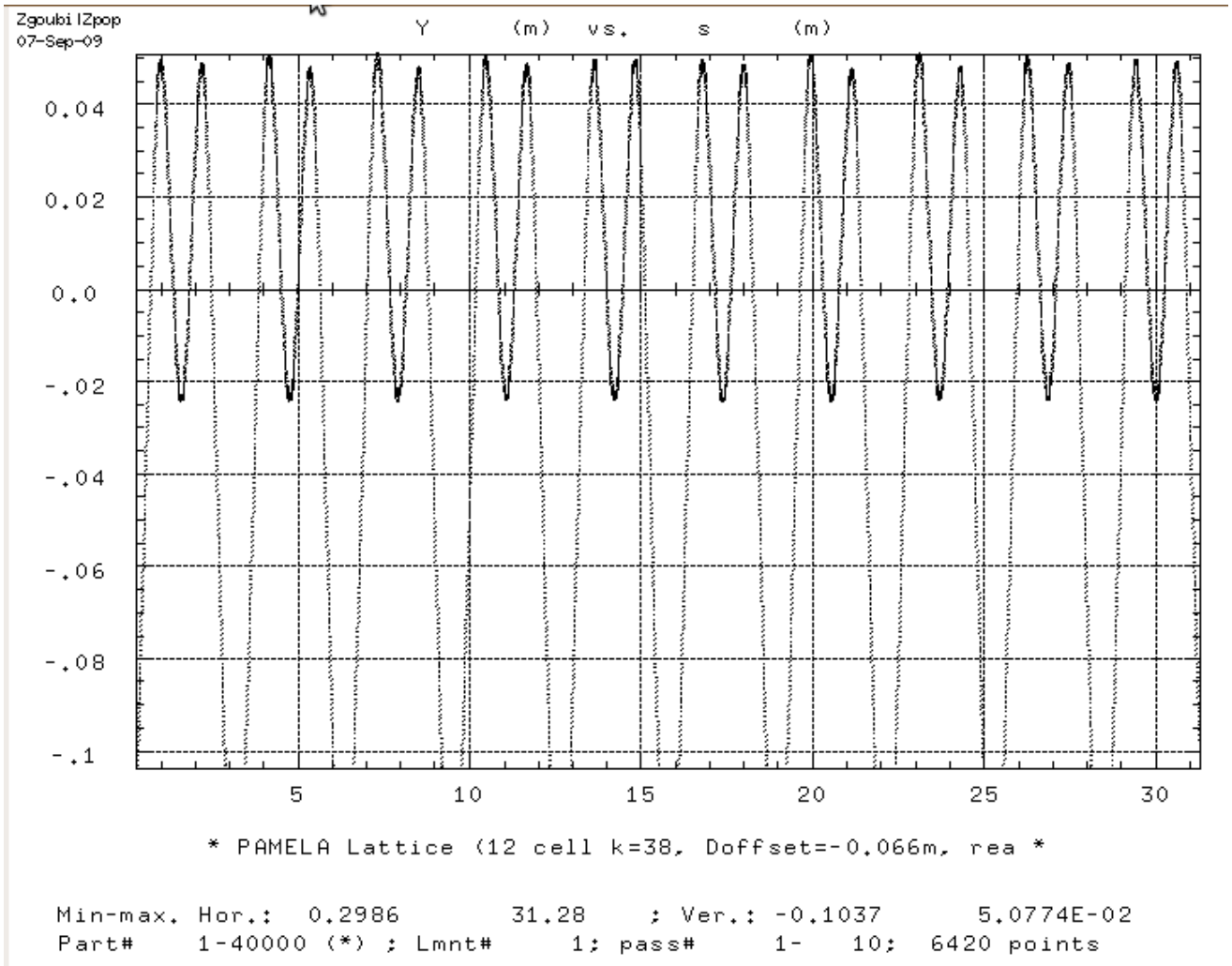

S. Sheehy and H. Witte

ZGOUBI – Double-helix vs. Quadruple Helix

Quadruple-helix

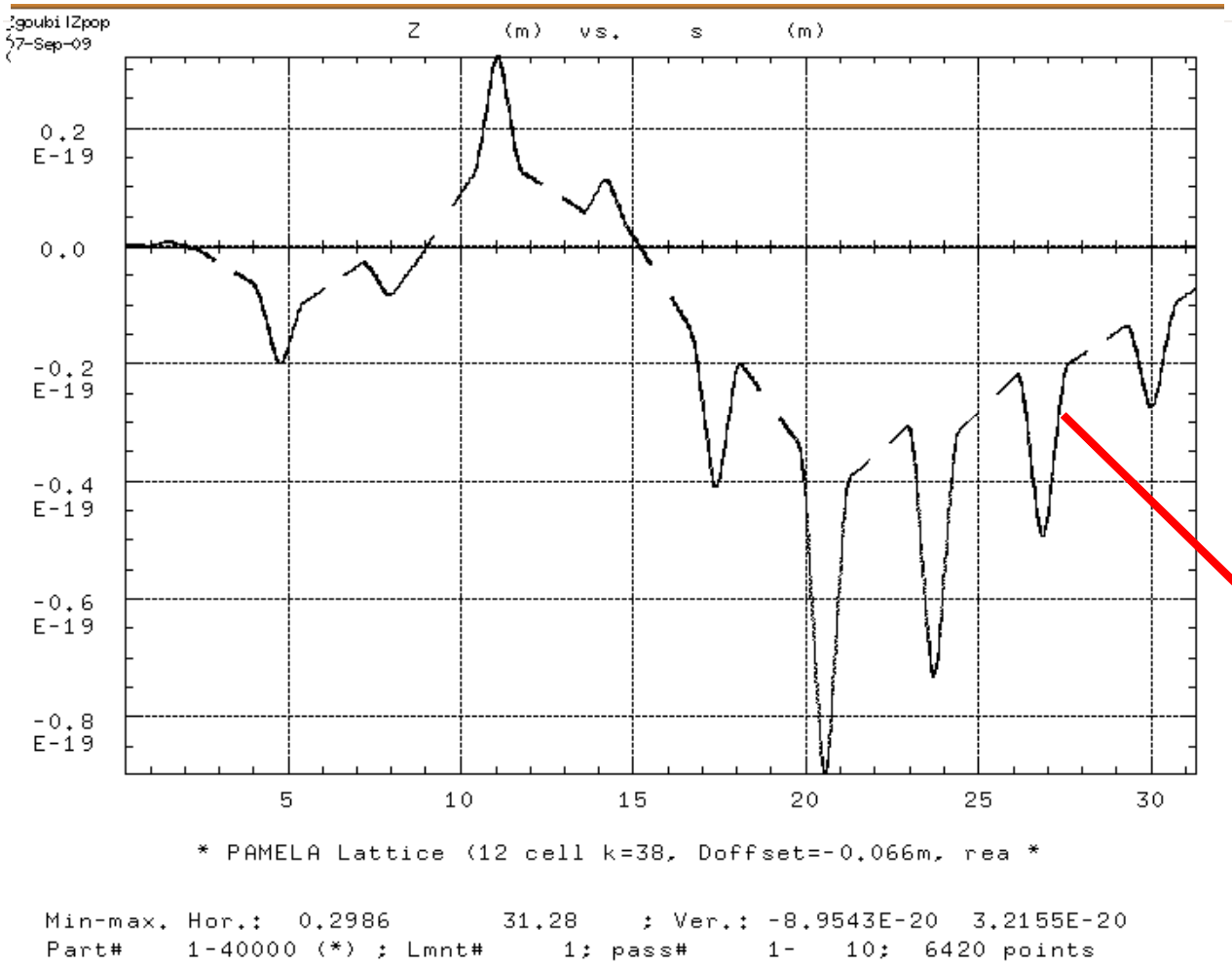

Numerical noise

S. Sheehy and H. Witte

Quadruple Helix – Phase Space

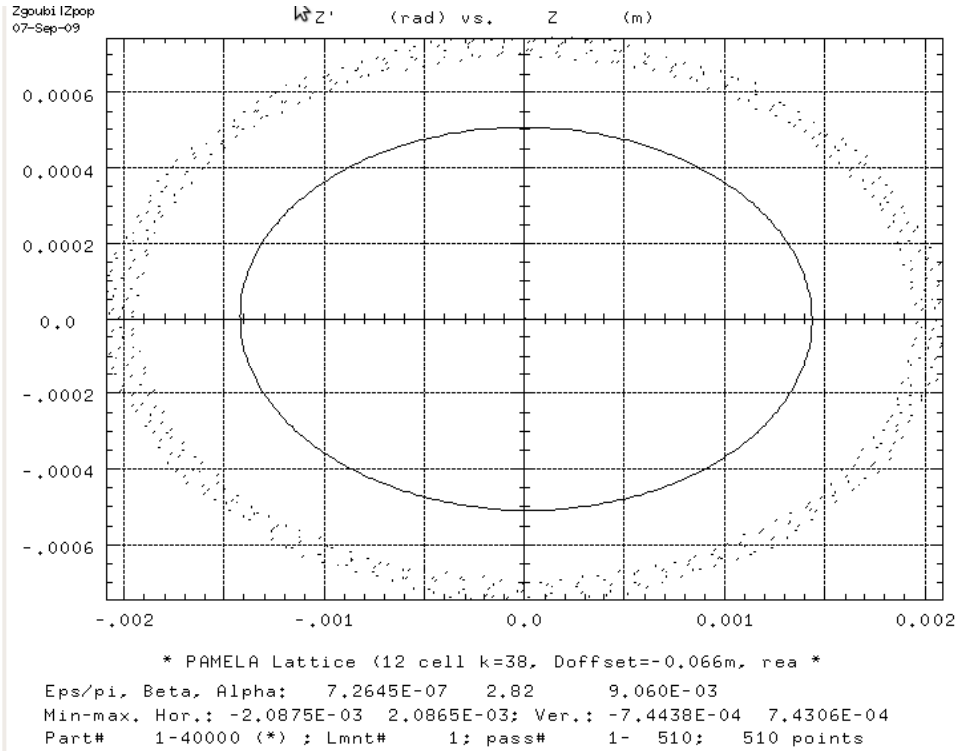

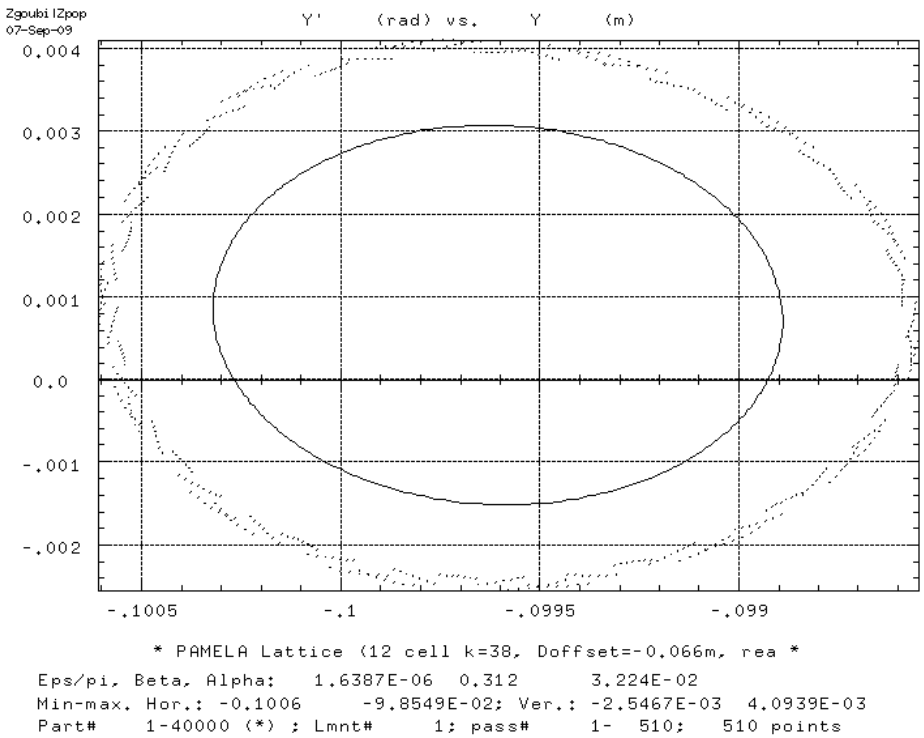

Quadruple helix concept filed for patent in November 2009
Patent GB 0920299.5
ISIS Innovation, Oxford University

3D Field Map Tracking - Stable Tunes

- After optimization: Tune change within 0.3/0.27 (machine)
- Patent pending...

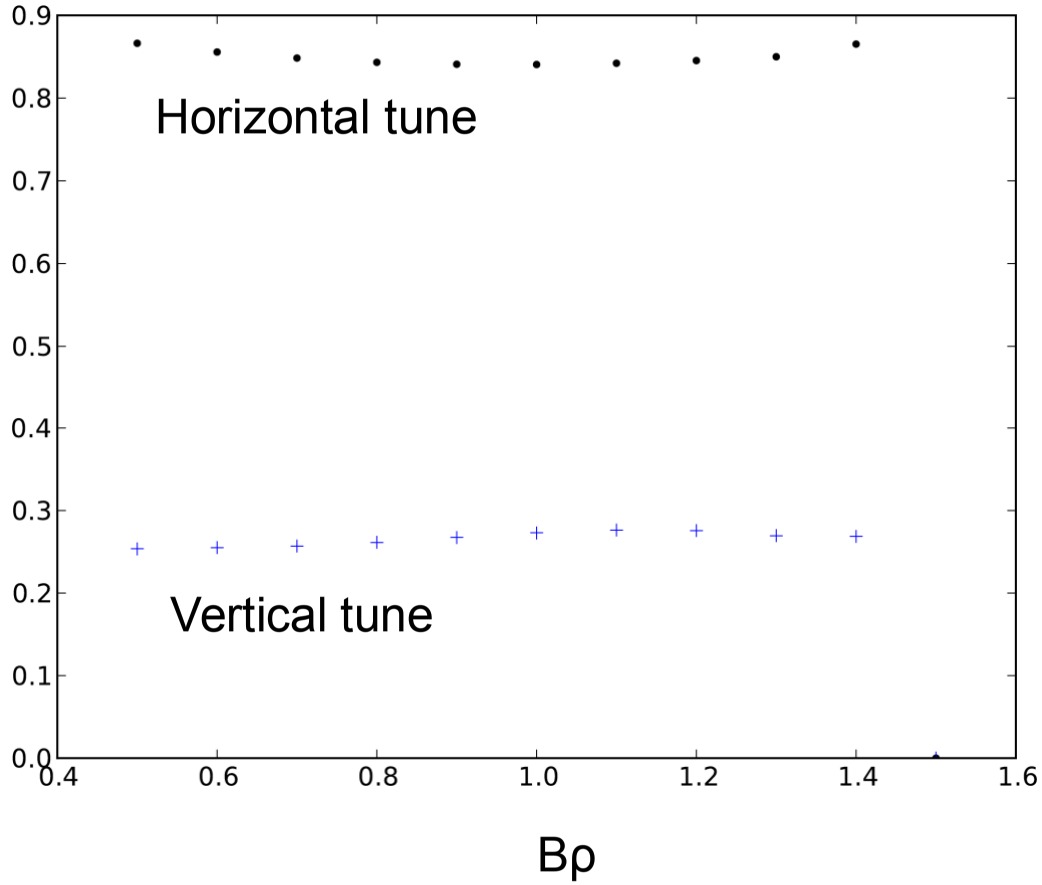

Helical Coil vs. Classical Designs

- Consider classical dipole
- Two main differences
  - Automatically more sections
    - More cross-sectional area covered
  - Not blocks of constant current density
- Effect
  - Better field quality
  - Less steep gradients of vector potential
  - Lower magnetic field on wire

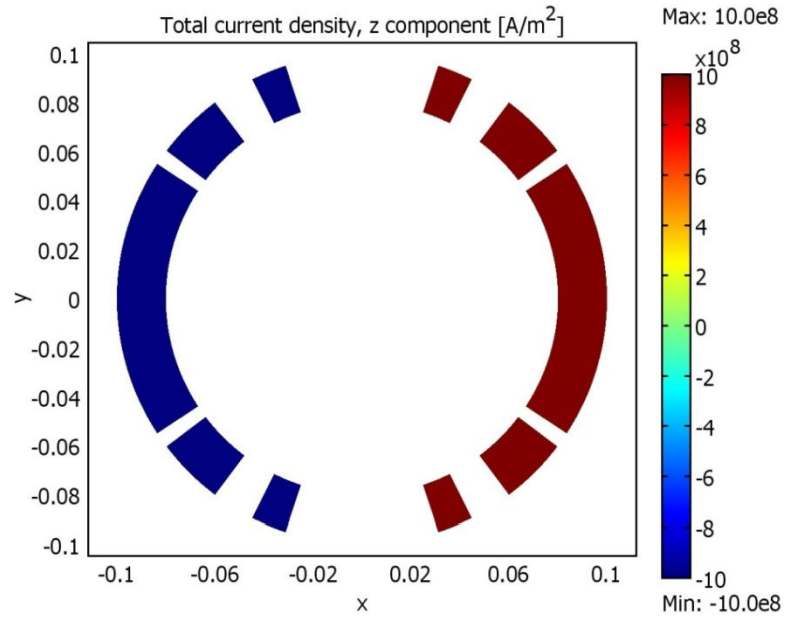

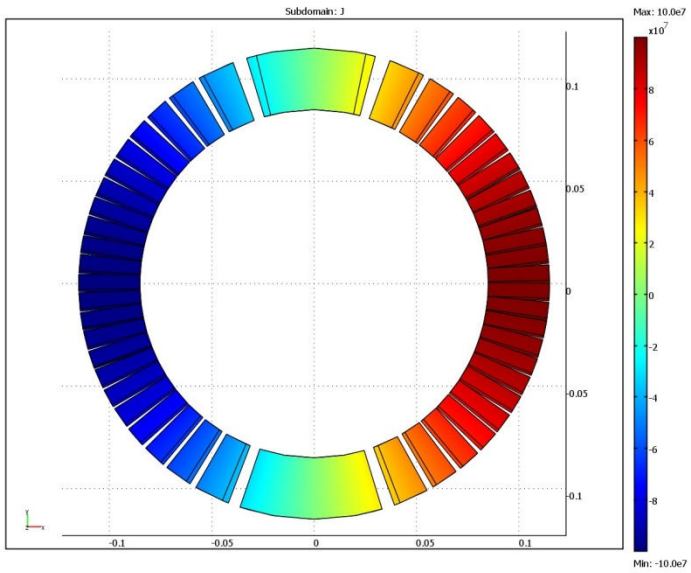

Coupland. NIM (78):181-4, 1970.

2D Comparison - Dipole

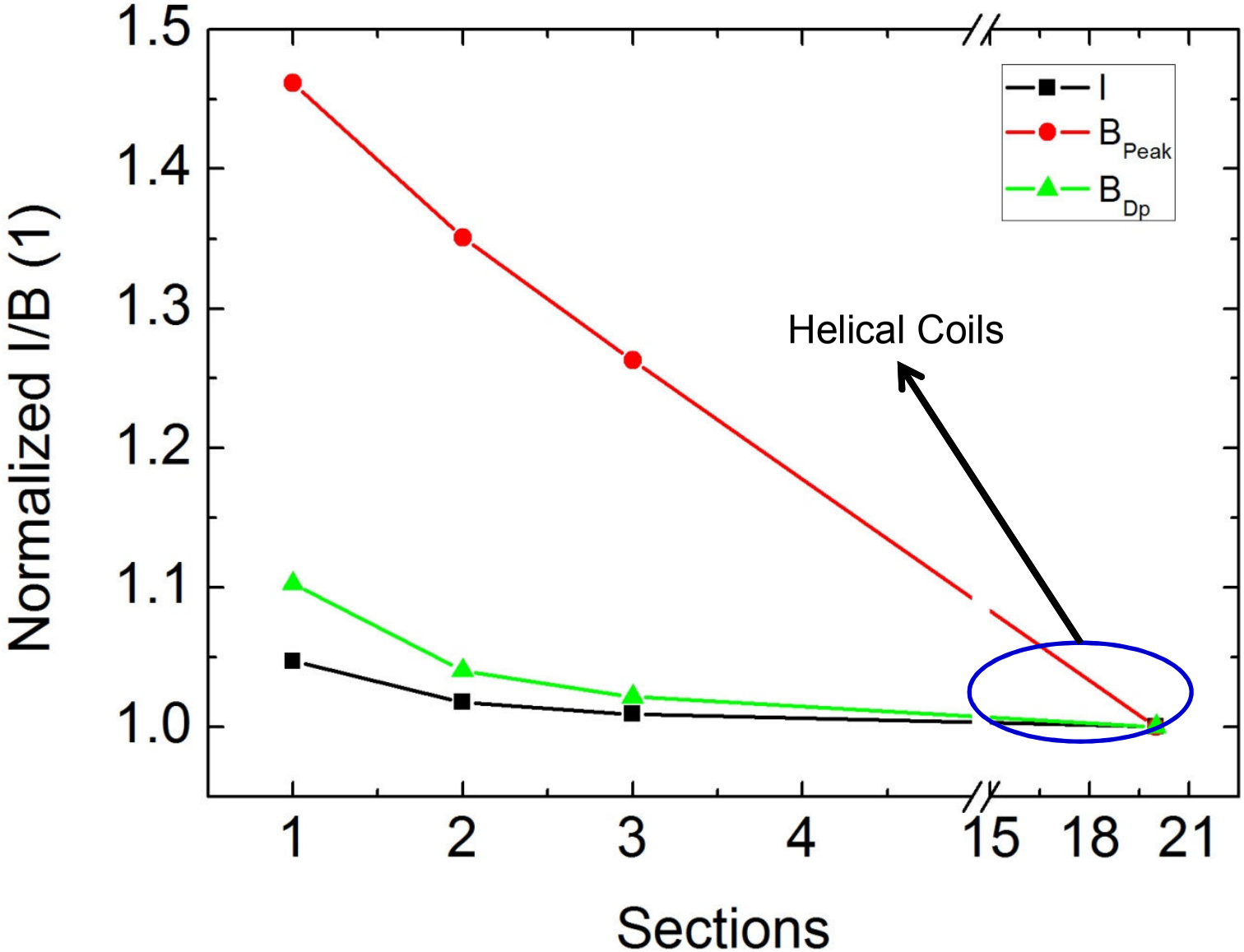

Carbon Ring

- Geometry
  - Radius former: 170mm
  - Length: 1080 mm
- Peak field on wire: 3.8T
- Temperature margin: >2K
- Alternative: Conventional cosine theta magnet
  - Jack Hobbs, MPhys project student
  - Peak field: 5.35 T
  - Magnetic energy: 700kJ

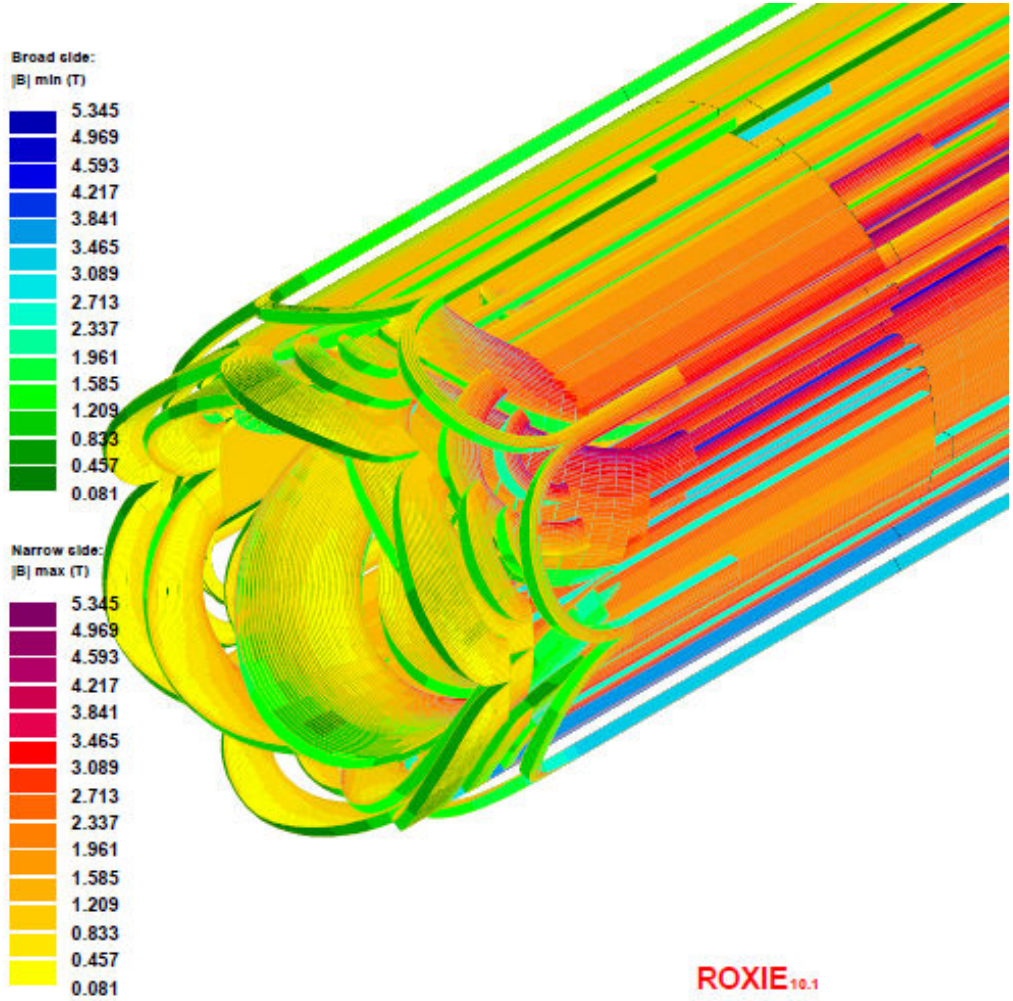

PRACTICAL REALISATION

Trial Windings

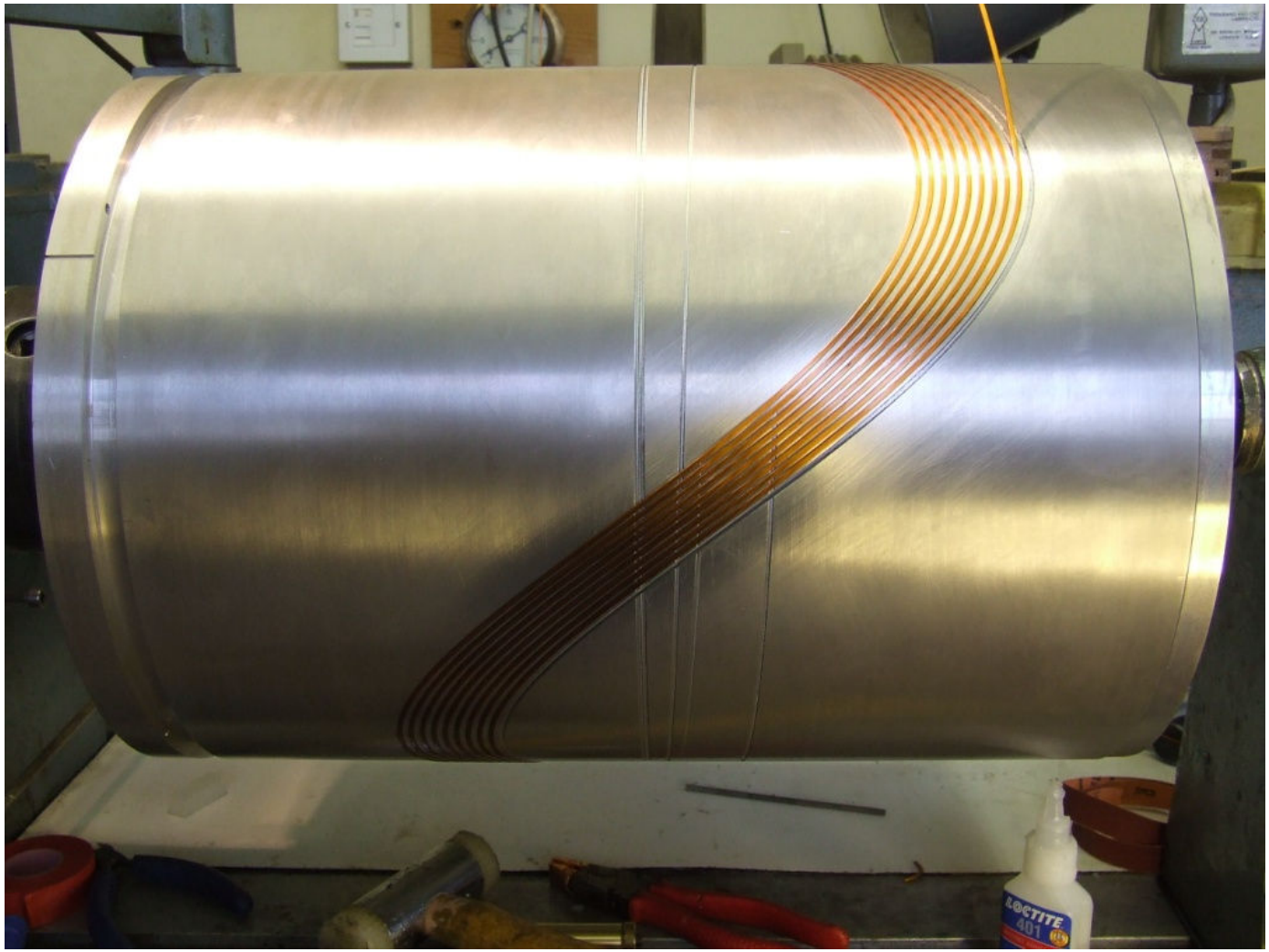

Trial Windings

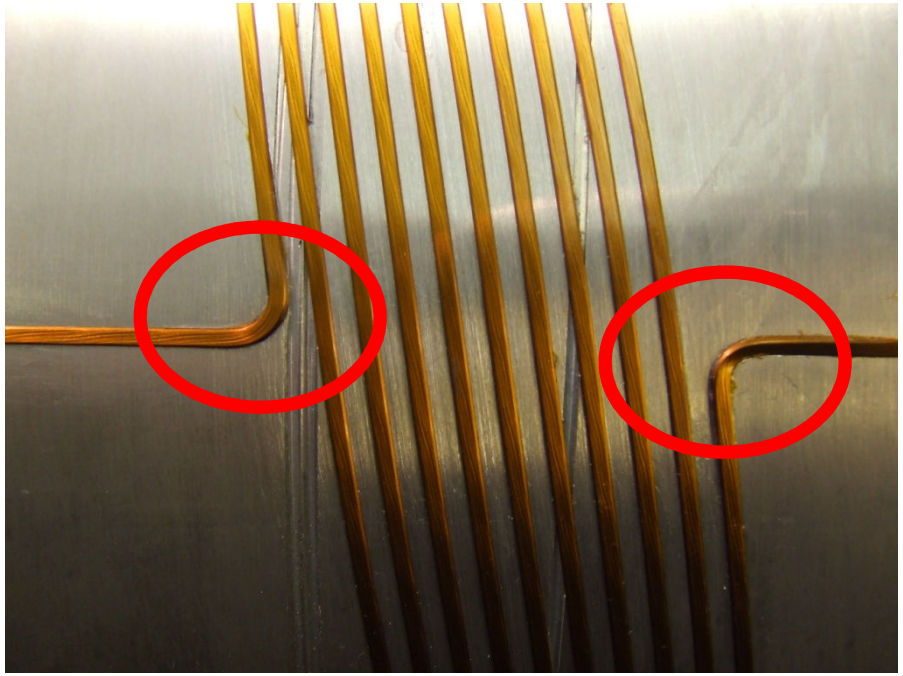

Corner Radius

Former: Manufacturing

- Aim: scalable manufacturing process
  - Grooves in flat sheet
  - Precision rolling
- Alignment system
  - Alignment pins
  - Key system
- Photo etching
- First quotations
- Next trial!
- Neil Bliss, Shrikant Pattalwar, Thomas Jones, Jonathan Strachan, Holger Witte

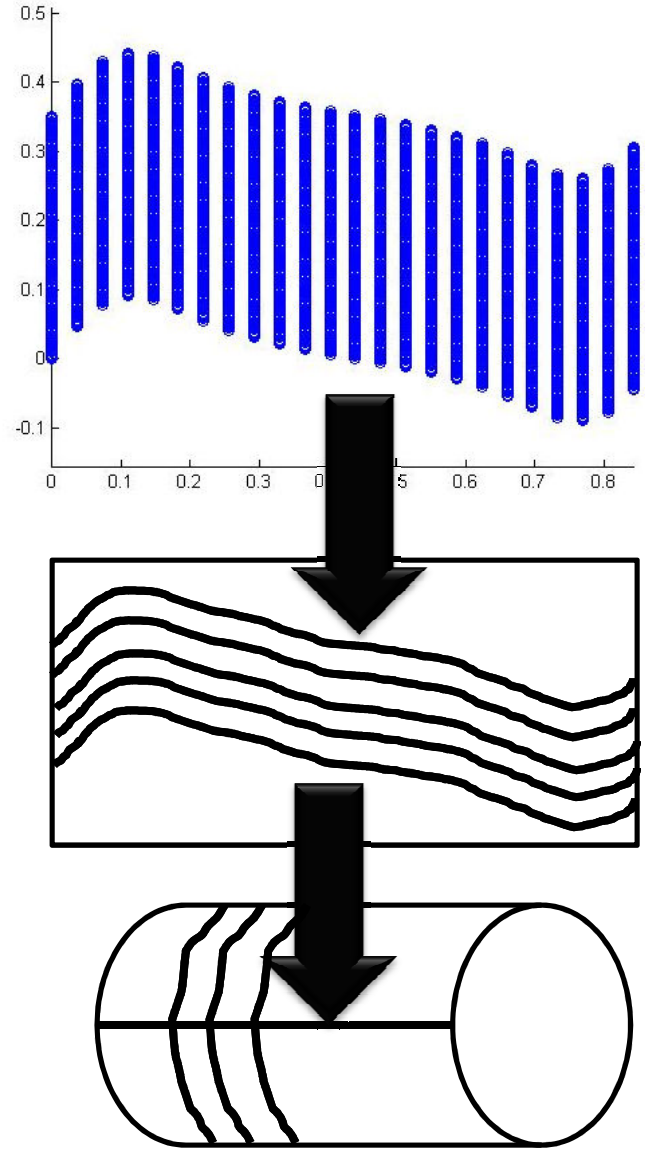

PAMELA Cryostat

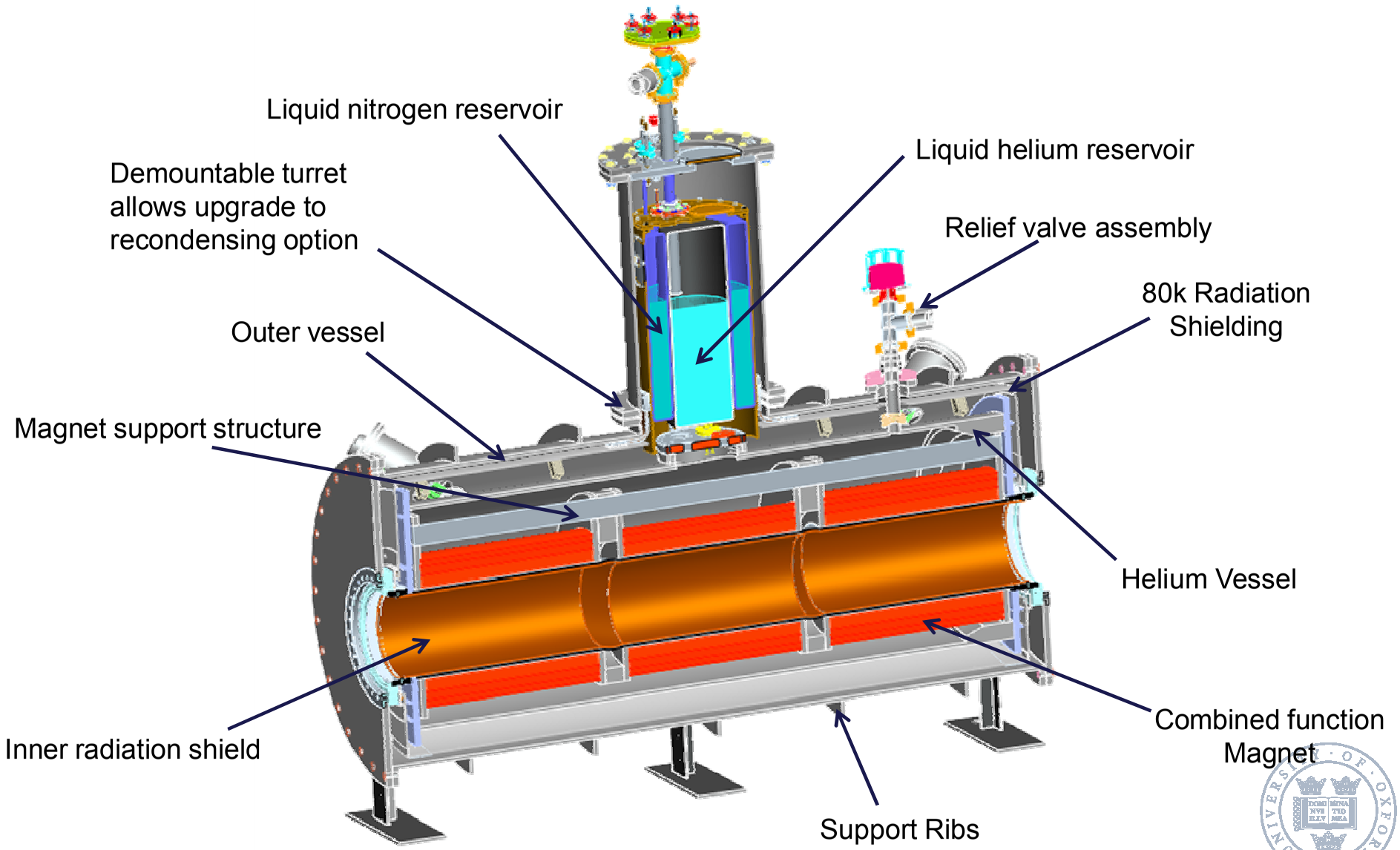

Magnet Coil Support

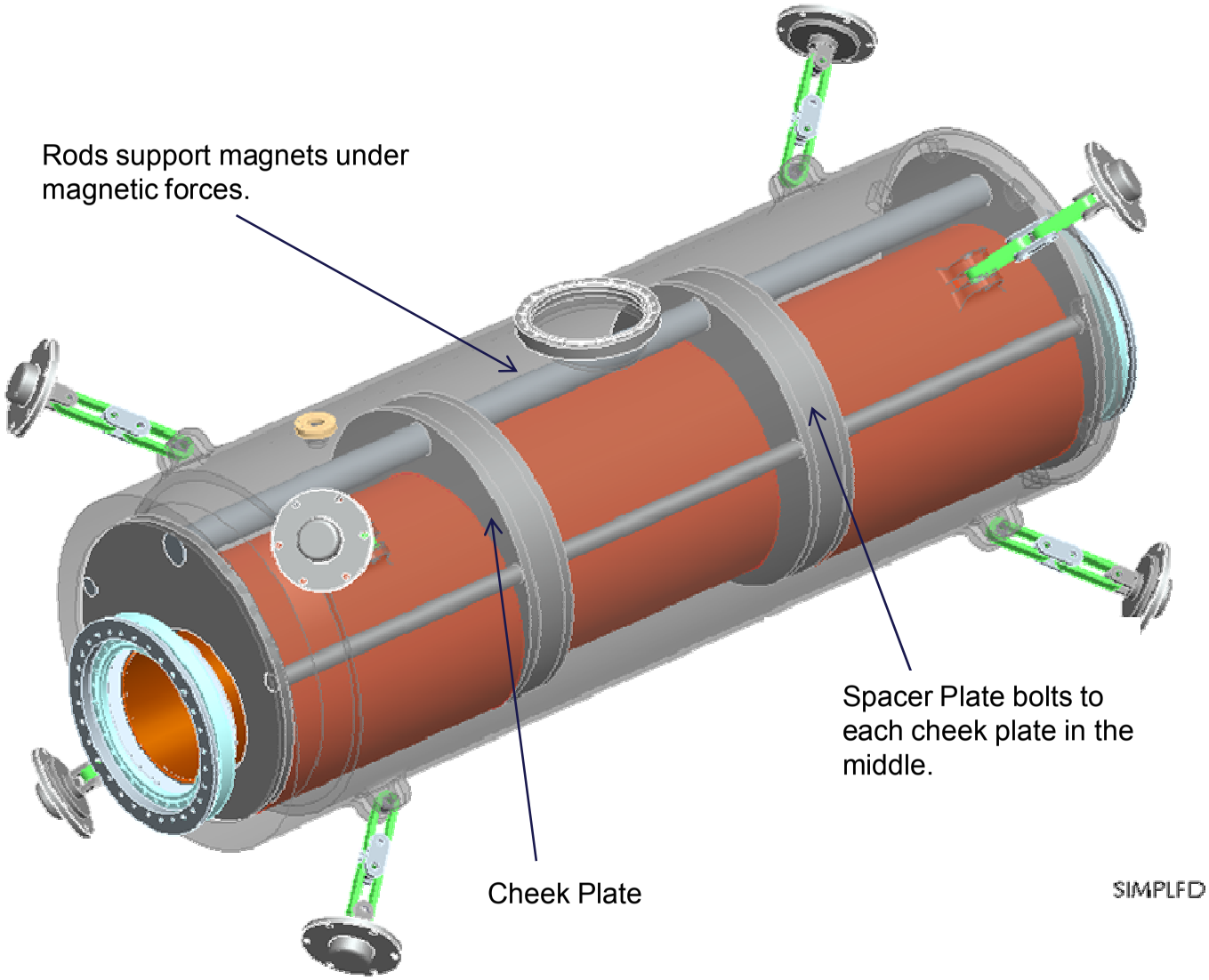

BEAM EXTRACTION

Kicker Magnet – Proton Lattice

- Extraction kicker proton ring = injection kicker carbon
- Vertical extraction
- Requirements
  - ∫Bds=60mTm
  - Rise time <100 ns
  - Flat top >100 ns
  - Ripple < 5%
  - Rep. Rate: 1kHz
- Aperture: 160x17/30 mm^2
- Current: 10 kA
- Inductance
  - 17 mm: 0.1 uH
  - 30 mm: 0.2 uH

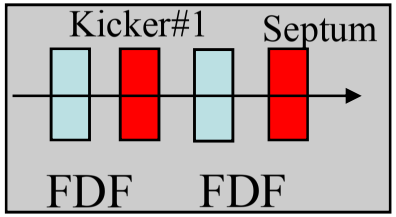

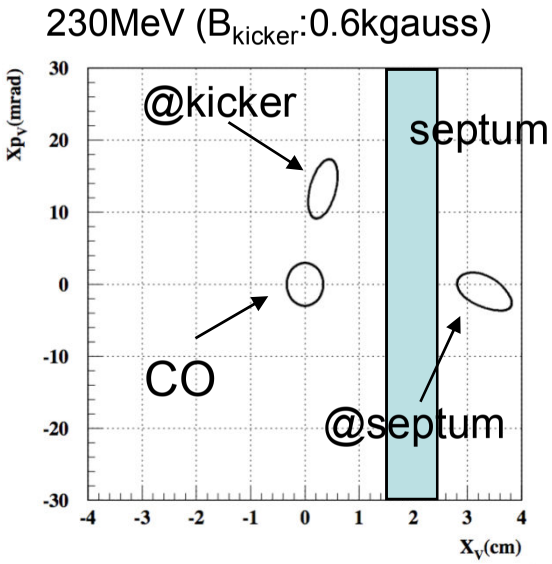

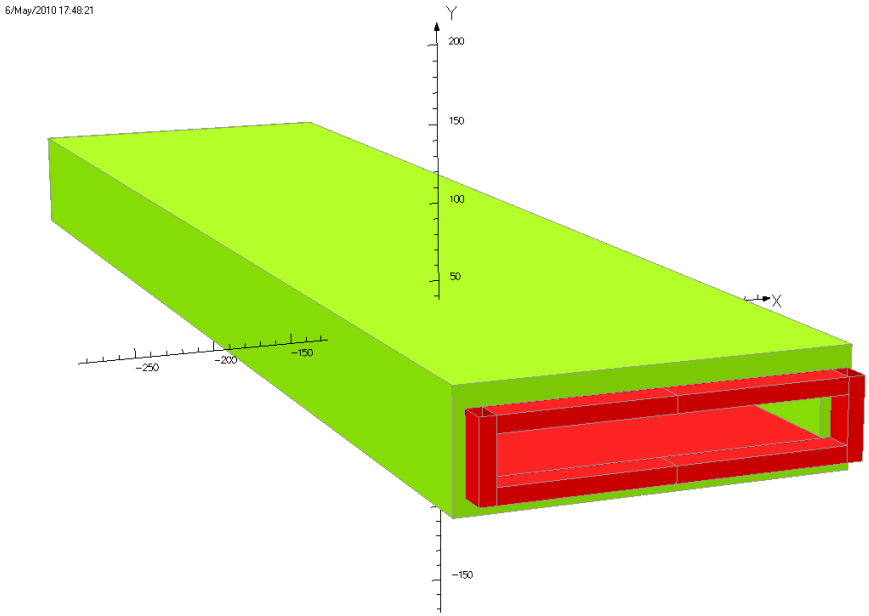

T. Yokoi and H. Witte

PFN Circuit

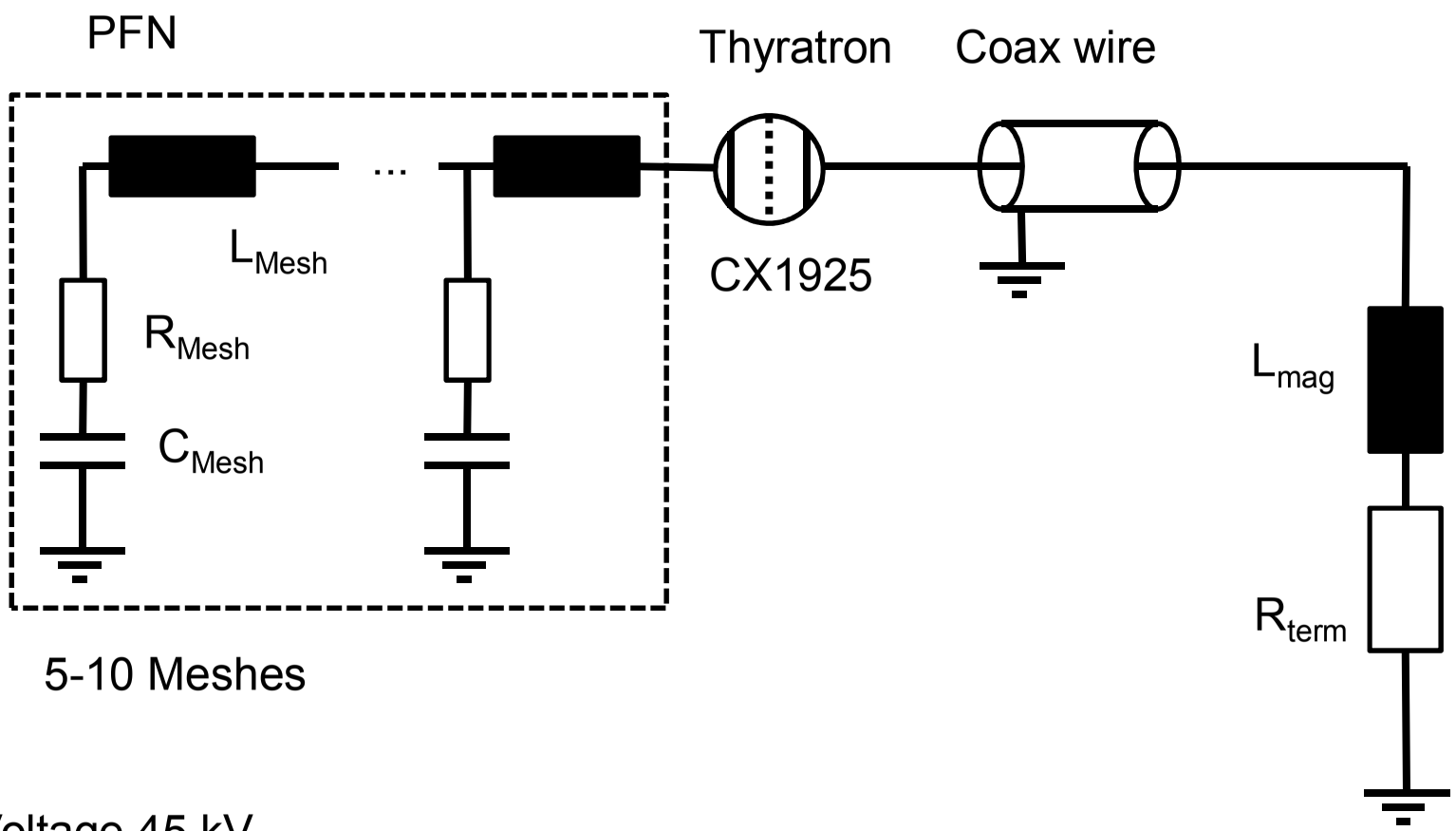

Voltage 45 kV
RG192 coax: 10 m length (t_{delay}=50ns)
6 in parallel (2.08 Ohm impedance)
Tested up to 30kV
R_{term}=2 Ohm

Kicker Options

Lumped

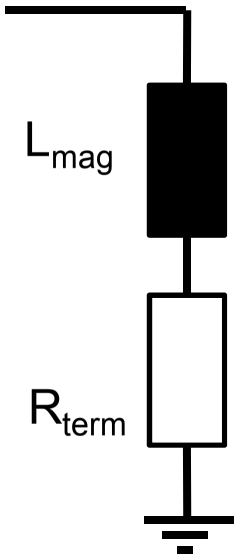

Kicker: Easy
Fast
Reflections
Complicates PFN

Travelling Wave

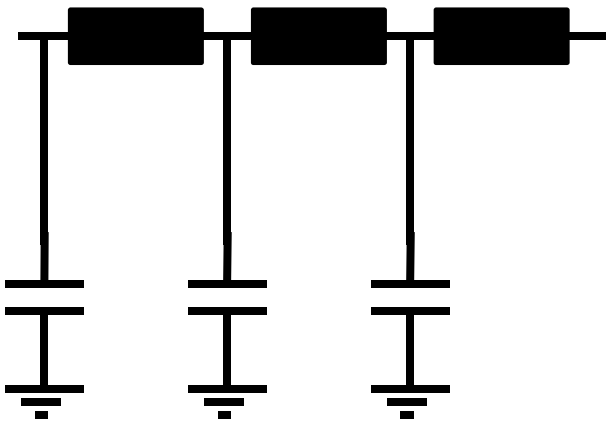

Kicker: Complicated
Magnetic filling time
No reflections
Standard PFN

Compensation Network

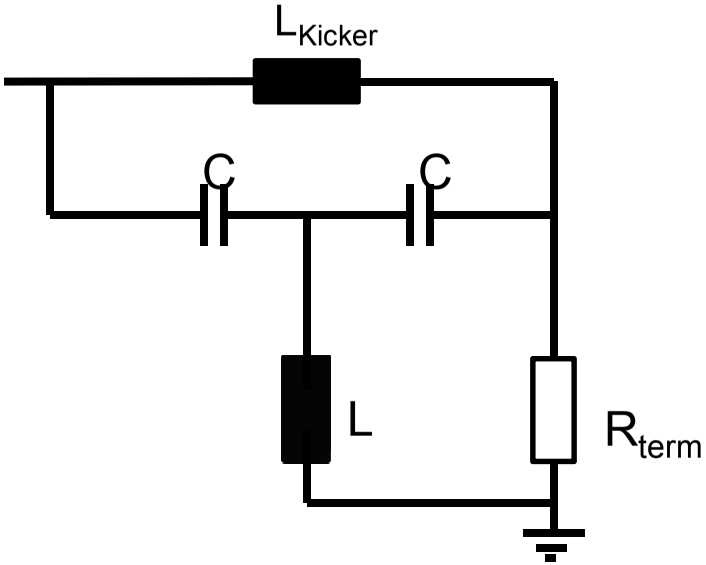

Kicker: Easy
Fast
No reflections
Standard PFN

Oki, NIM A 607, 2009.

Pulse

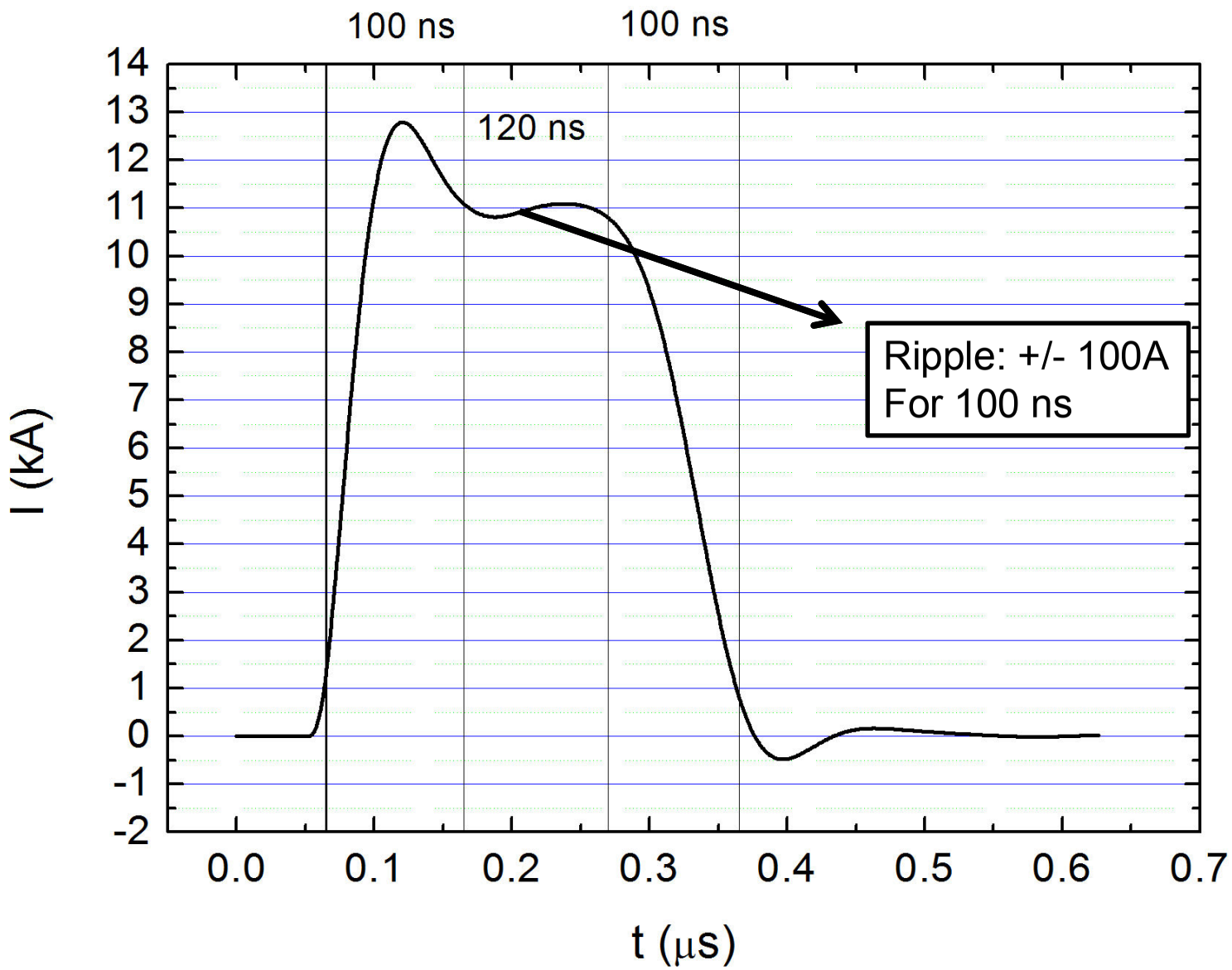
100 ns
100 ns
120 ns
Ripple: +/- 100A
For 100 ns
I (kA)
t (μs)
14
13
12
11
10
9
8
7
6
5
4
3
2
1
0
-1
-2
0.0
0.1
0.2
0.3
0.4
0.5
0.6
0.7

PFN Circuit – Extension to Carbon

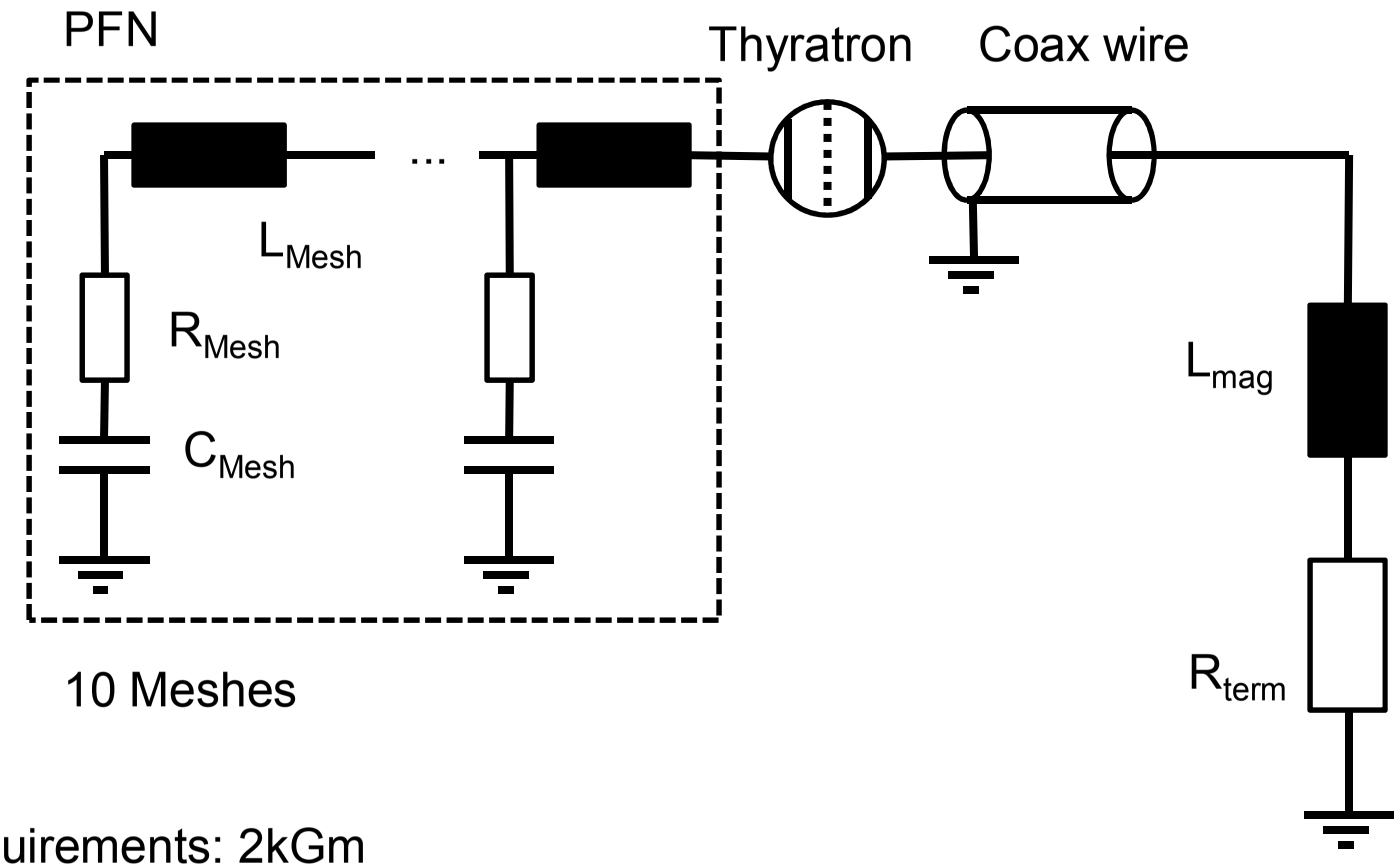

Requirements: 2kGm
Current: 30 kA
Impedance 1 Ohm
RG192 coax: 30 m length (t_{delay}=150ns)
Voltage: 60kV
Kicker subdivided into 6 smaller kickers

Carbon PFN

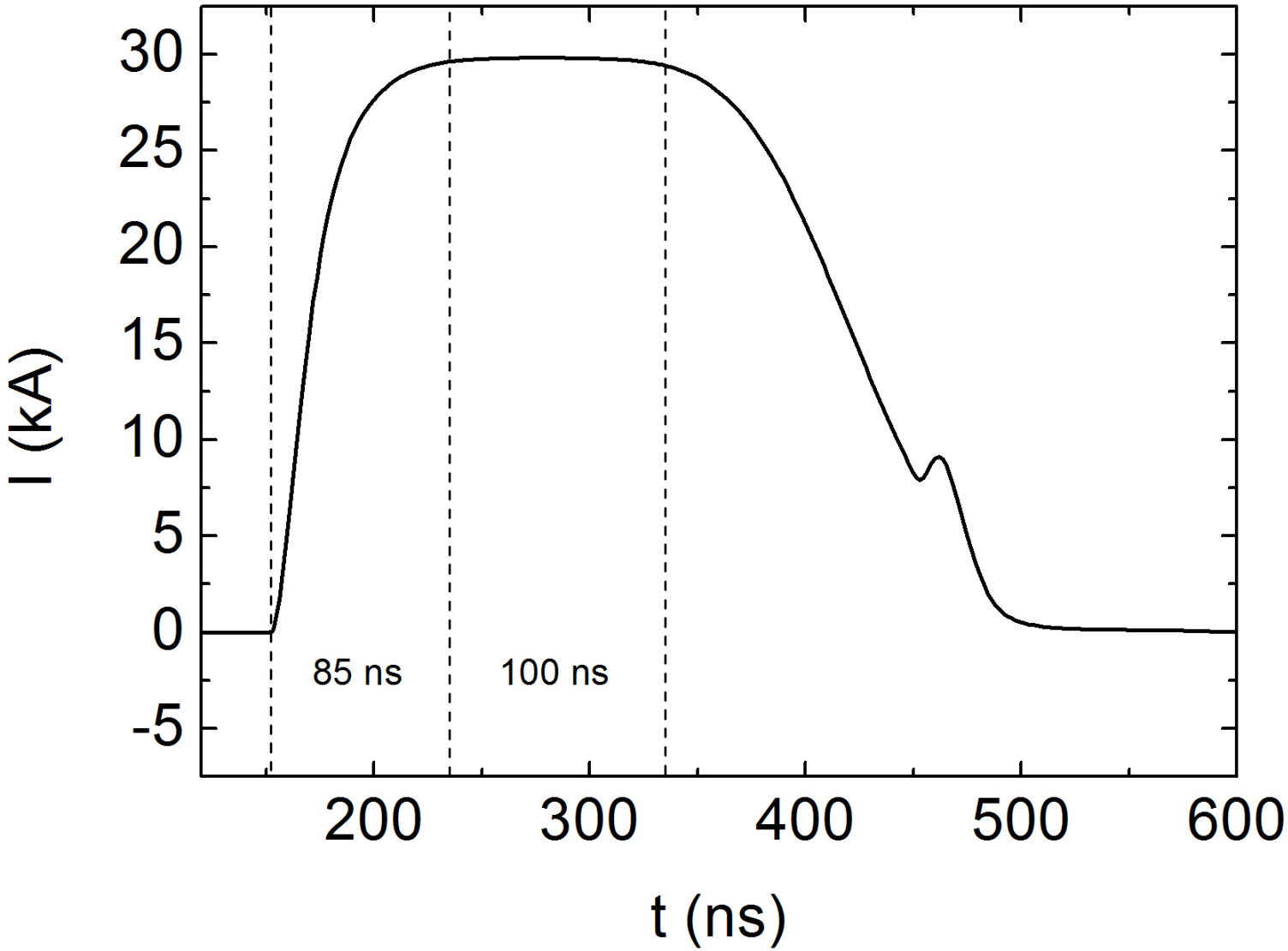

Summary and Outlook

- PAMELA
  - Exciting project to introduce CPT to the UK
- R&D
  - Many issues have been solved (on paper...)
    - Lattice, RF, injector and kicker magnets
  - Magnets
    - Helical coils are fascinating alternative
      - Very good field quality, better performance
    - Very flexible
- Ongoing work
  - Gantry
  - Transport line
  - 4T septum
- PAMELA is not the only interesting development
  - RCS, Cyclinacs, IBA C400, Still River, ...
  - Future should be very exciting!

Future

A Joint Proposal for the development of a Proton Beam Therapy service at Oxford - leading the development of a network of excellent services across England

12 March 2010

Foreword

The decision to commission the development of Proton Beam Therapy services in England will play a key part in ensuring the UK can provide its citizens with genuinely world class cancer services. It offers the opportunity for the UK to become a world leader in this important technology, exploiting it to ensure both improved outcomes for patients and better value for money, more cost effective care.

This proposal demonstrates the commitment of the Oxford Radcliffe Hospitals NHS Trust, the University of Oxford, and the Gray Institute for Radiation Oncology and Biology and its funders to playing a major part in improving patient access to this important therapy, and to maximising its potential benefits.

We propose a phased development at Oxford of what will be a world-leading National Research Facility for charged particle treatment delivering the highest quality of care to cancer patients.

Our proposal is led by clinical and academic staff who have achieved unrivalled international recognition in this field, and who have first-hand experience in developing and using Proton Beam Therapy services. Furthermore, we have an excellent potential site for the facility with all the necessary clinical linkages and clinical support services, free of complex planning issues and lending itself to rapid development.

We believe that the inclusion of Oxford as one of the chosen centres is the best way to ensure that the UK PBT service becomes truly world class, with the full application of our research expertise. With our new Cancer Centre, the Gray Institute for Radiation Oncology and Biology, the Particle Therapy Cancer Research Institute, and the John Adams Institute for Accelerator Science all working in partnership, Oxford is uniquely placed to deliver top-level PBT research and development within the UK. This will ensure that the UK service is not simply replicating what is already available elsewhere, but will develop PBT to its full potential, leading to better patient outcomes and more cost effective treatments.

Professor Andrew Hamilton
Vice-Chancellor, University of Oxford

Dame Fiona Caldicott DBE
Chairman, Oxford Radcliffe Hospitals NHS Trust

Professor Gillies McKenna
Director, Gray Institute for Radiation Oncology and Biology

Thank you for your attention!