MYRRHA

An innovative and unique irradiation research facility

Hamid AÏT ABDERRAHIM
Deputy Director General
Director of MYRRHA Project
myrrha@sckcen.be

On behalf of the MYRRHA Team

Outline

- Objectives & Rationale
- Core design & performances
- Reactor layout
- Spallation target loop
- Cooling systems
- Accelerator
- Safety
- Operation & Maintenance
- Innovative design elements
- Project Schedule & Conclusion

Outline

- Objectives & Rationale
- Core design & performances
- Reactor layout
- Spallation target loop
- Cooling systems
- Accelerator
- Safety
- Operation & Maintenance
- Innovative design elements
- Project Schedule & Conclusion

MYRRHA Objectives

- Flexible fast spectrum irradiation facility
- ADS concept & efficient transmutation
- Contribution to Gen.IV demonstration
- Operational around 2020

Rationale

Objectives	Requirements	Choices
Flexible Fast Spectrum Irradiation facility	• 1.10^{15} n/cm².s (>0.75 MeV) in large volumes (3 l)	• small target → windowless design • off-centre SL • LM cooling
	• availabilty (65%) • flexibility	• HLM cooling • pool-type • in-vessel storage • FA manipulation beneath core • in-vessel inspection & repair • IPS manipulation above core • replaceability
	• no high temperatures required	• LBE cooling

Rationale

Objectives	Requirements	Choices
ADS demonstration	• high power accelerator • reliability • target	• LINAC (600 MeV, 4 mA)
LFR demo	• HLM technology & components • *Critical mode operation*	• *MYRRHA/FASTEF*
Operational in ~2020	• Use of mature technology where possible • Innovation where needed	• FR MOX 30-35% fuel • T91 MS (15-15-Ti AS) • LBE

MYRRHA design evolution

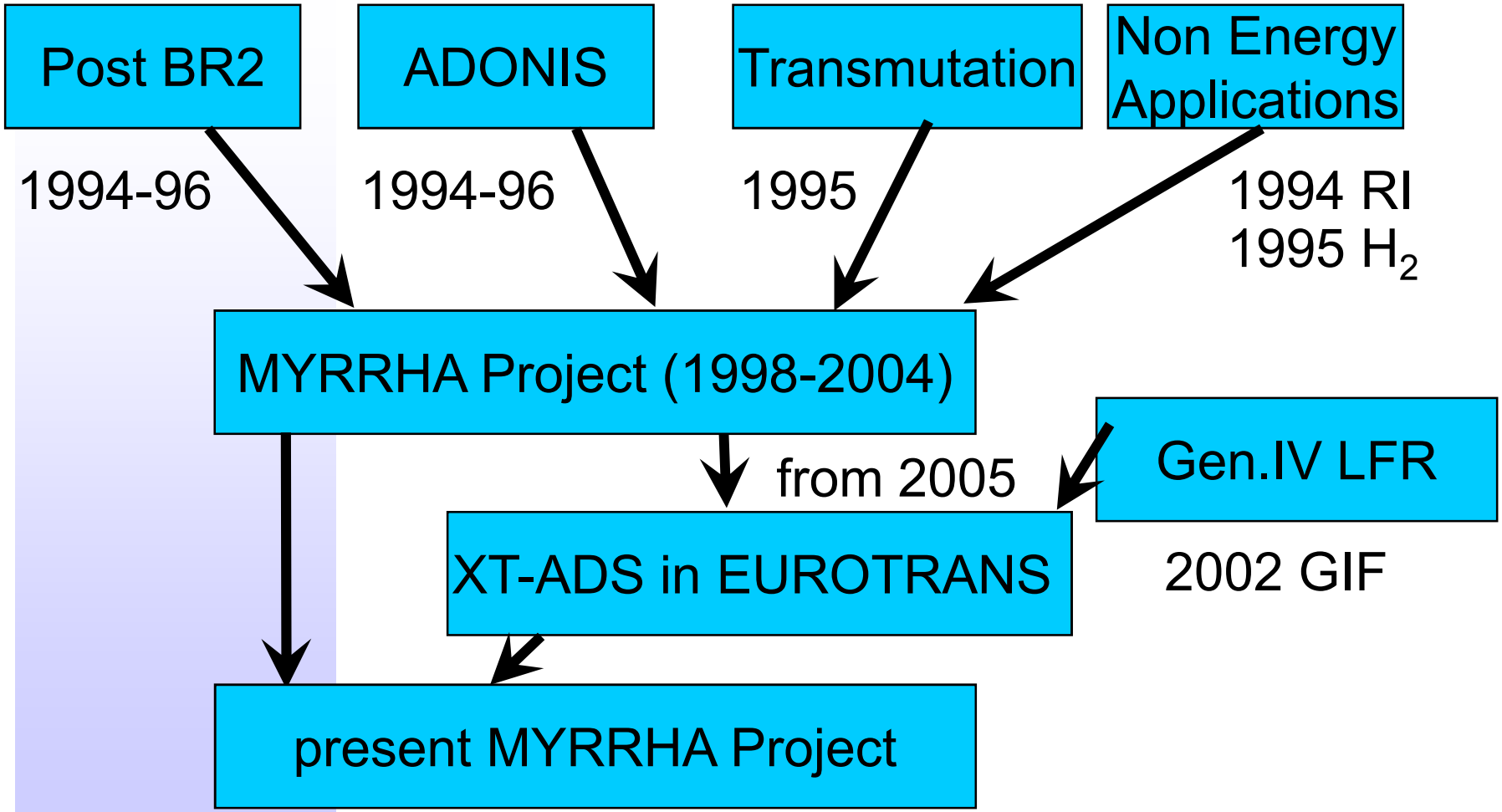

MYRRHA design evolution

Draft 2 2005	XT-ADS 2006-2009	XT-ADS-HF end 2009	FASTEF 2012
LINAC 350MeV	LINAC 600MeV	LINAC 600MeV	Subcritical design optimisation and critical operation
High power density core → Safety 'ULOF'	Low power density core	Low power density core	
Low core power 52MW	Low core power 57MW →	High core power 85MW	
Neutron flux 10^{15}n/cm²s (>0.75MeV)	Neutron flux 7.10^{14}n/cm²s (>0.75MeV)	Neutron flux 10^{15}n/cm²s (>0.75MeV)	

MYRRHA design evolution

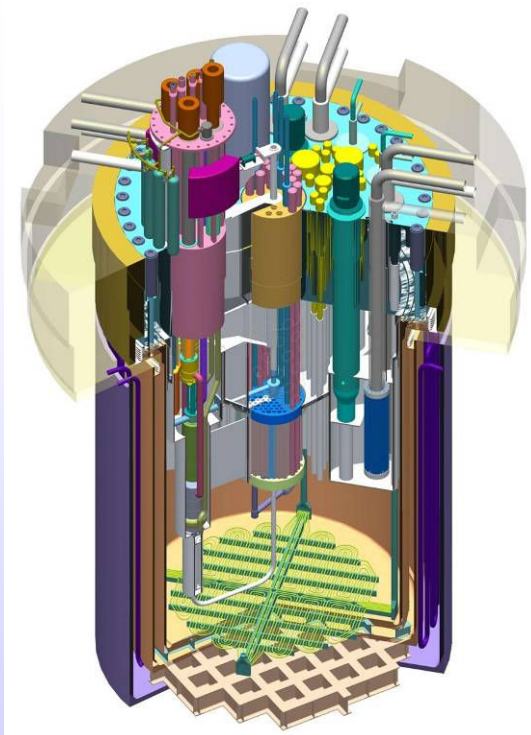

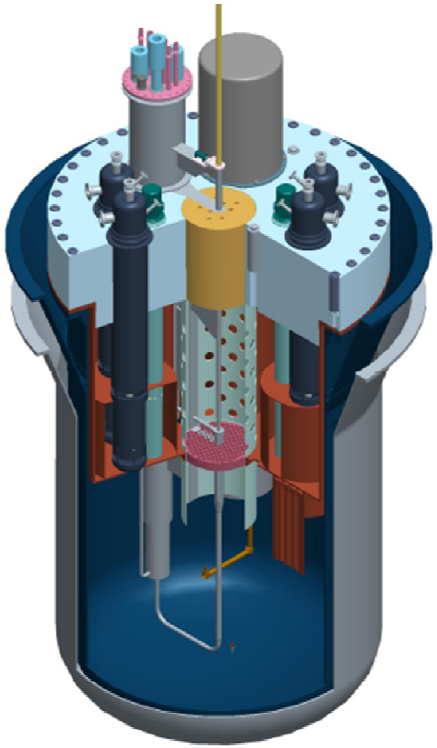

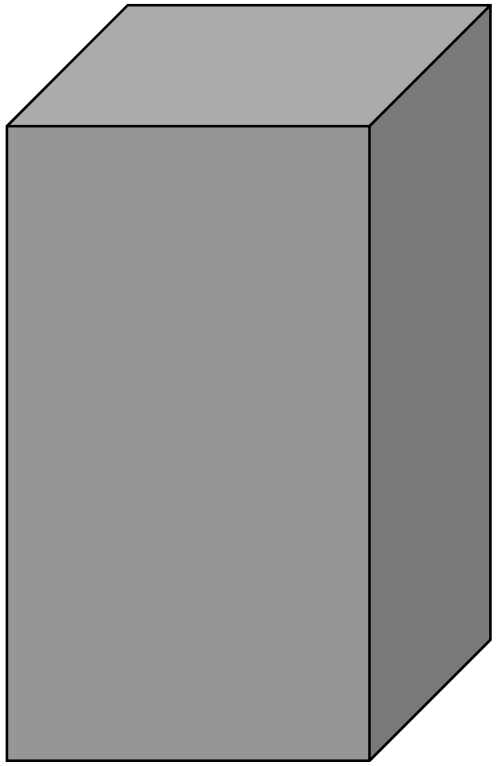

MYRRHA 2005 ⇨ XT-ADS 2009 ⇨ FASTEF 2012

Confirmation of design choices

Confirmations of design choices within FP6 IP-EUROTRANS by European Partners (2006-2009)
(AREVA, ANSALDO, EA, FZK, CEA, CNRS and others)

- Core specifications
- General specifications of primary system
- In-vessel fuel handling from beneath the core

Outline

- Rationale
- Core design & performances
- Reactor lay out
- Spallation target loop
- Cooling systems
- Accelerator
- Safety
- Operation & Maintenance
- Innovative design elements
- Project Schedule & Conclusion

Subcritical core

- $k_{eff} \approx 0.95$
- 30-35 % MOX fuel
- IPS positions

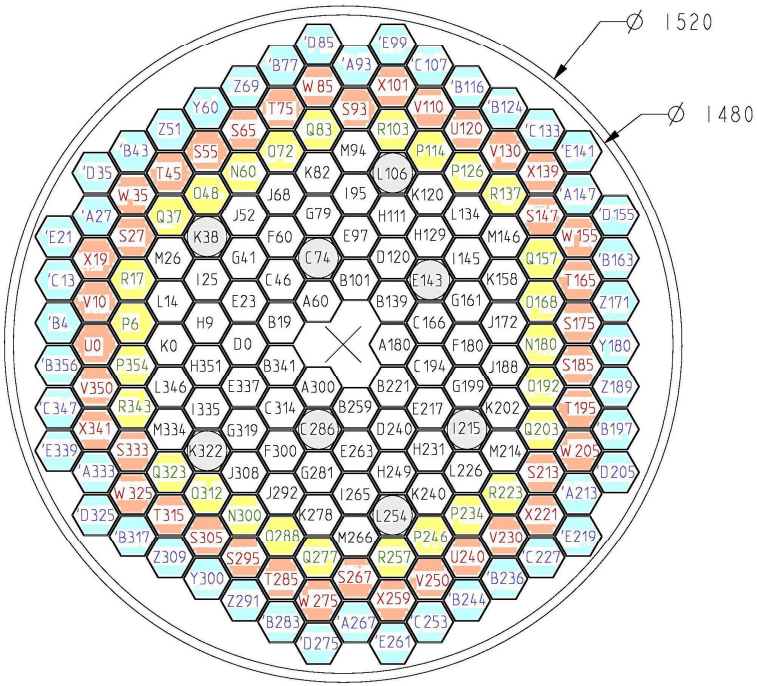

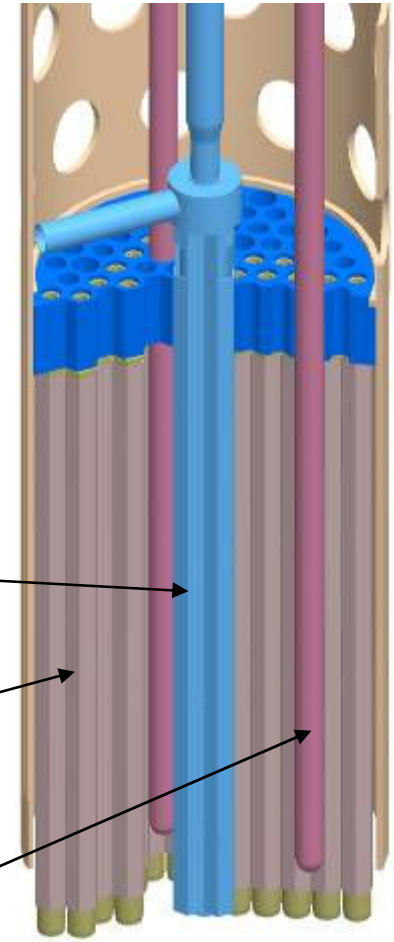

Fuel assembly

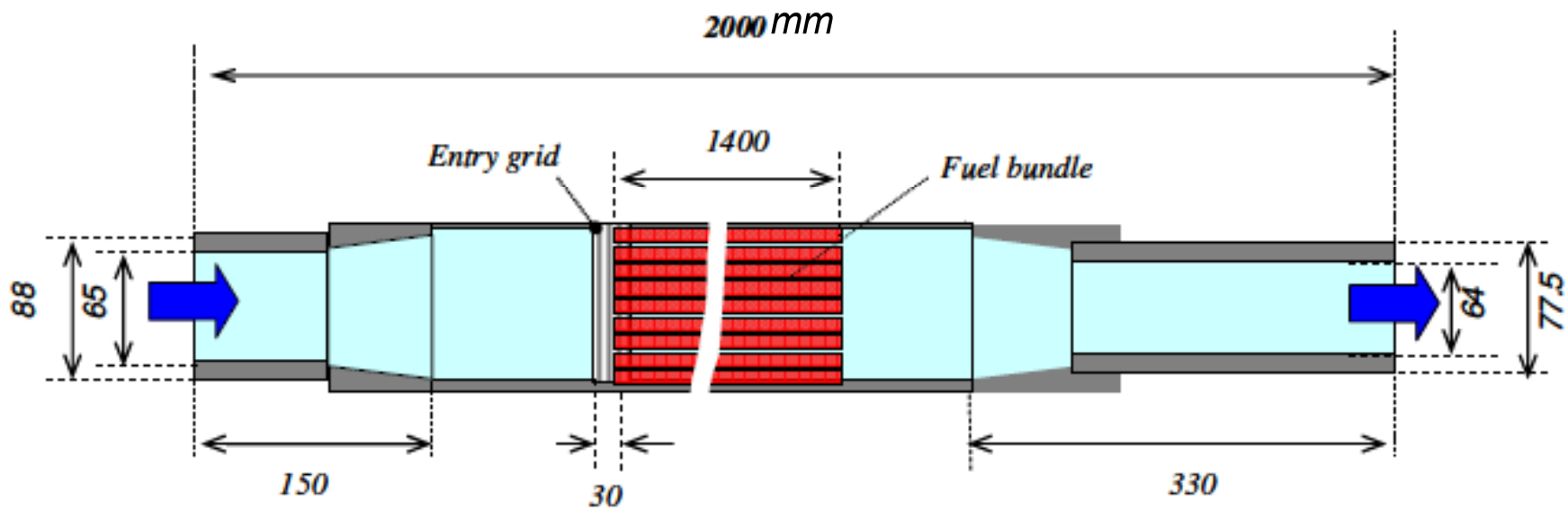

Fuel pin characteristics

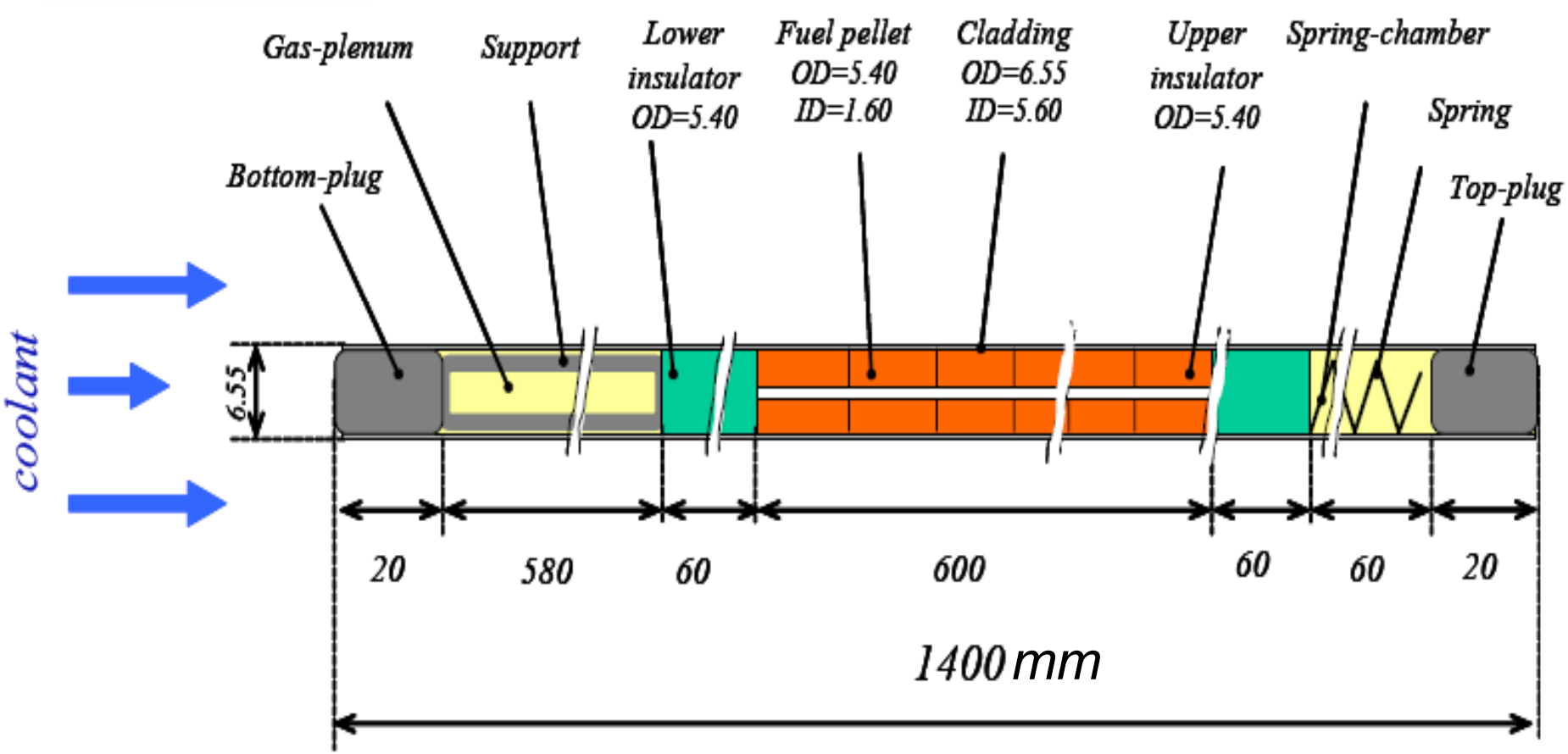

Core performances

	(unit)	Draft2 2005	XT-ADS 2006-2009	XT-ADS HF end 2009
Core power	MW_{th}	52	57	85
Active core average power density	W/cm^3	292	165	246
Fast flux above 0.75 MeV	$n/cm^2.s$	1E+15	6.68E+14	1.01E+15
Inlet temperature	°C	200	300	270
Coolant delta T	°C	140	100	130
Velocity (fuel rod)	m/s	1.96	1.39	1.72
Velocity (spacer-grid)	m/s	-	2.02	2.50
Temperature at clad surface	°C	450	481	496
Maximum linear power	W/cm	352	249	372
Pressure drop	mb	1600	707	1066

Flexible Irradiation facility

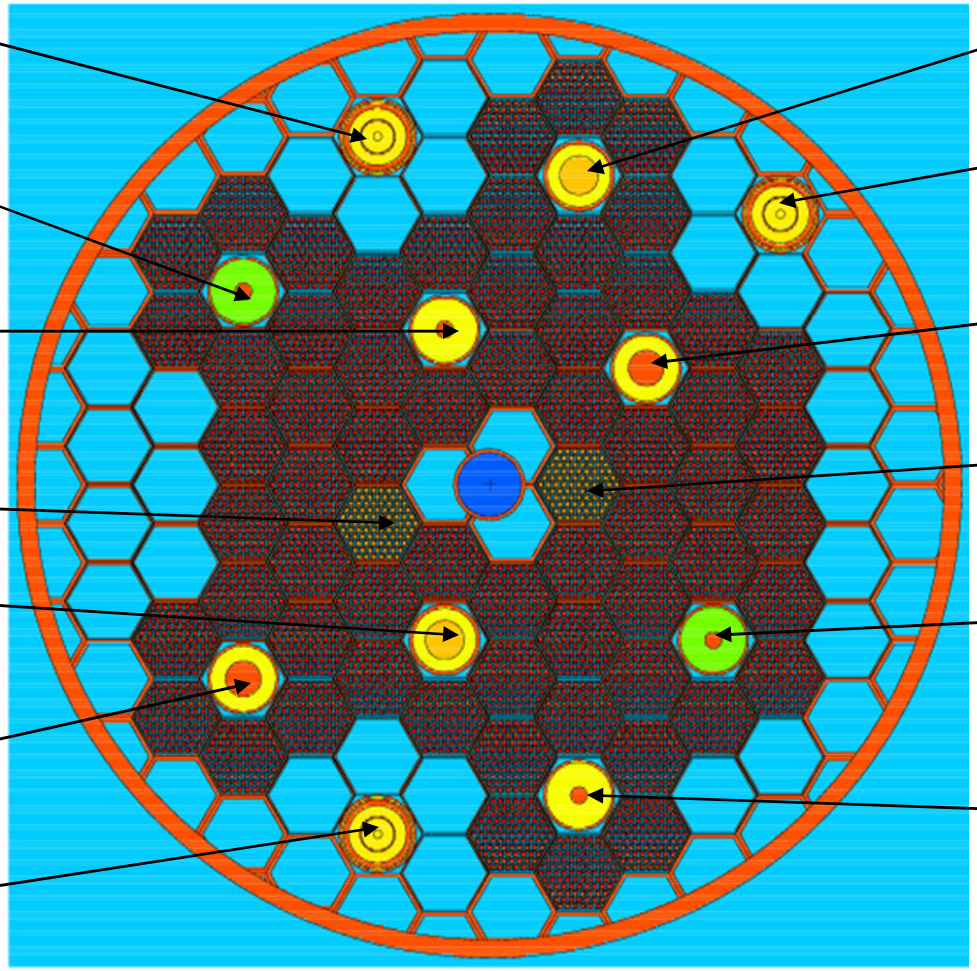

IPS Material Testing
Typical Layout

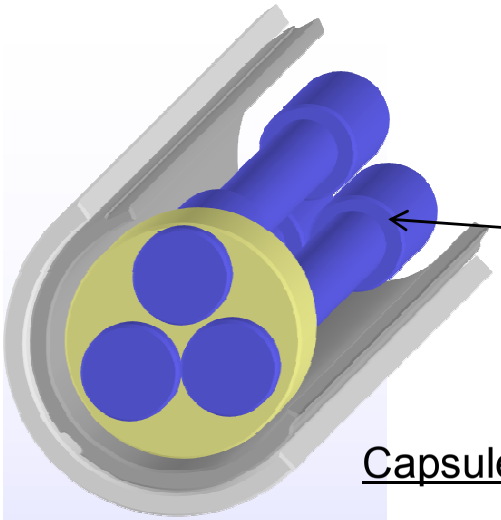

Capsule IPS

CT samples

Tensile samples

Charpy samples

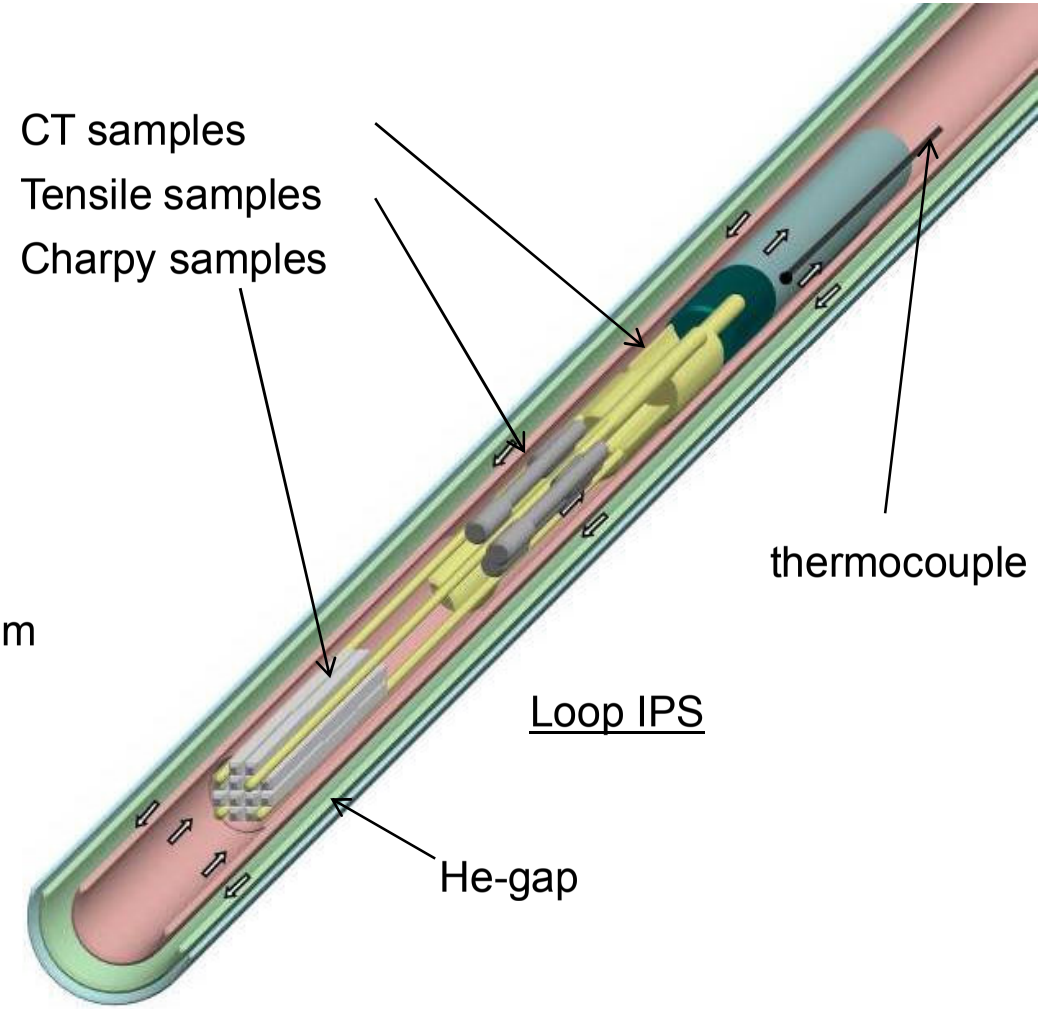

thermocouple

Loop IPS

He-gap

IPS outside diameter 80 mm

Length for irradiation test 600 mm

Instrumentation : dosimeter, thermocouple,…

Irradiations condition of materials in MYRRHA

- In IPS closest to spallation target
  - dpa: 18 dpa/EFPY
  - appmHe/dpa: 0.30 – 0.40

- Close to target module for fusion materials
  - dpa: about 31 dpa/EFPY (360 EFPDs)
  - appmHe/dpa: 6.4

- In hottest fuel assembly
  - dedicated irradiation fuel assembly, but no “loop-type”, limited volume
  - results in hottest pin clad:
    - ✓ dpa : about 30 dpa/EFPY
    - ✓ appmHe /dpa: about 3.8

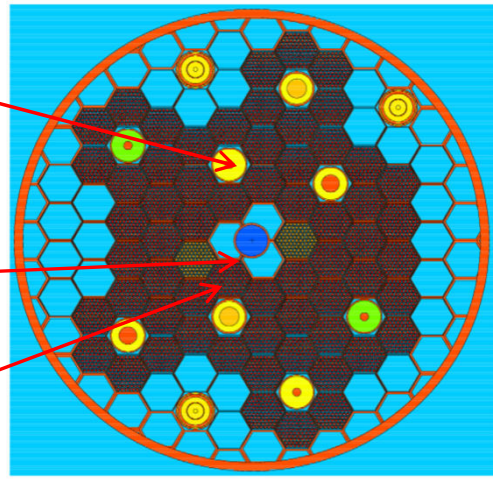

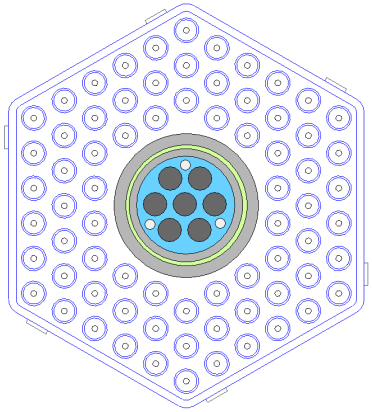

^{99}Mo Production

- Today 200Ci/g in BR2
- Expected 600Ci/g in MYRRHA

Core configuration with IPS position

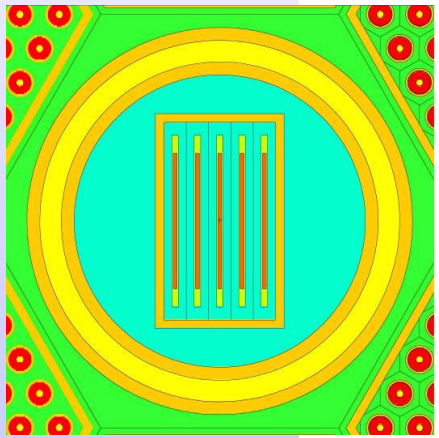

Irradiation IPS with 5 HEU targets

Production performance in C74 channel

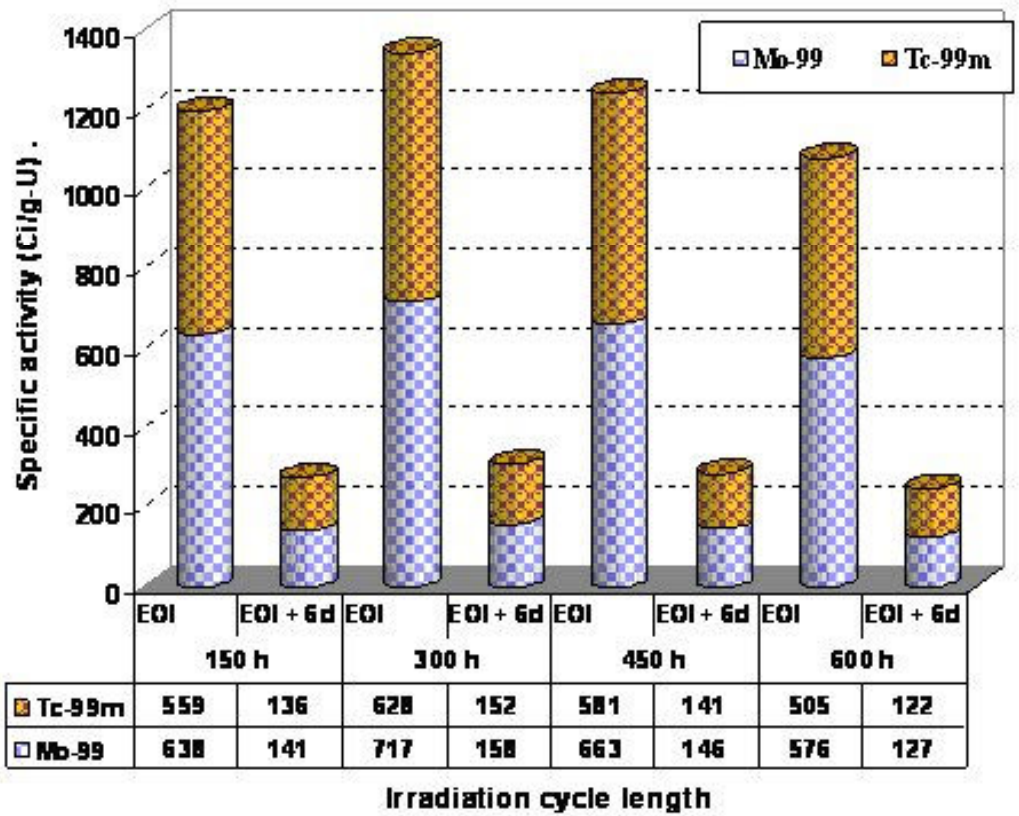

	150 h EOI	150 h EOI + 6d	300 h EOI	300 h EOI + 6d	450 h EOI	450 h EOI + 6d	600 h EOI	600 h EOI + 6d
Tc-99m	559	136	628	152	581	141	505	122
Mo-99	638	141	717	158	663	146	576	127

Si-doping

	$\Phi_{<0.5\ eV}$, n/(cm^2·s)
BR2 Sidonie	$1 \cdot 10^{14}$
BR2 Poseidon	$1 \cdot 10^{13}$
MYRRHA	$3 \cdot 10^{12}$

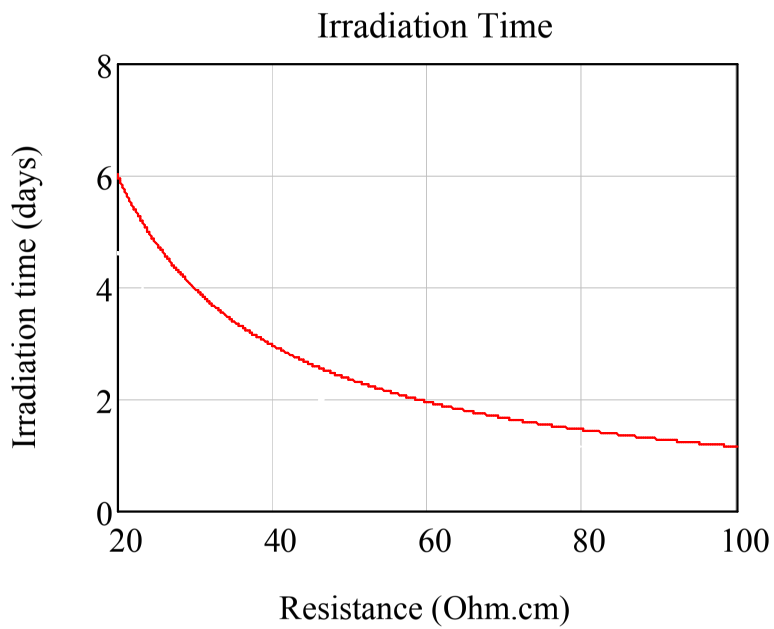

2 x 3 Si blocks

8 inch dia

2 x 25 cm height

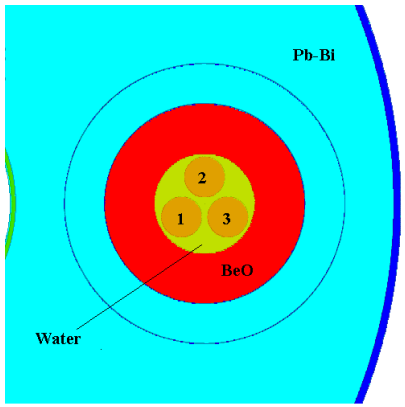

Outline

- Objectives & Rationale
- Core design & performances
- Reactor layout
- Spallation target loop
- Cooling systems
- Accelerator
- Safety
- Operation & Maintenance
- Innovative design elements
- Project Schedule & Conclusion

Layout

Inner vessel

Cover

Core structure

Spallation loop

Heat exchangers

Pumps

Diaphragm

Fuel storage

Fuel manipulators

Guard vessel

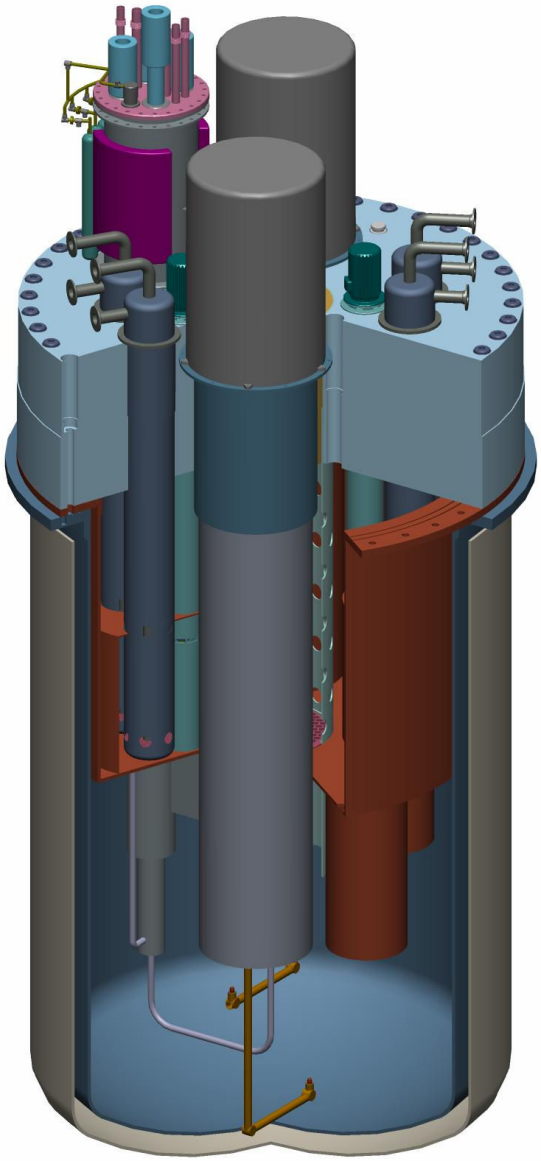

In-vessel FA handling

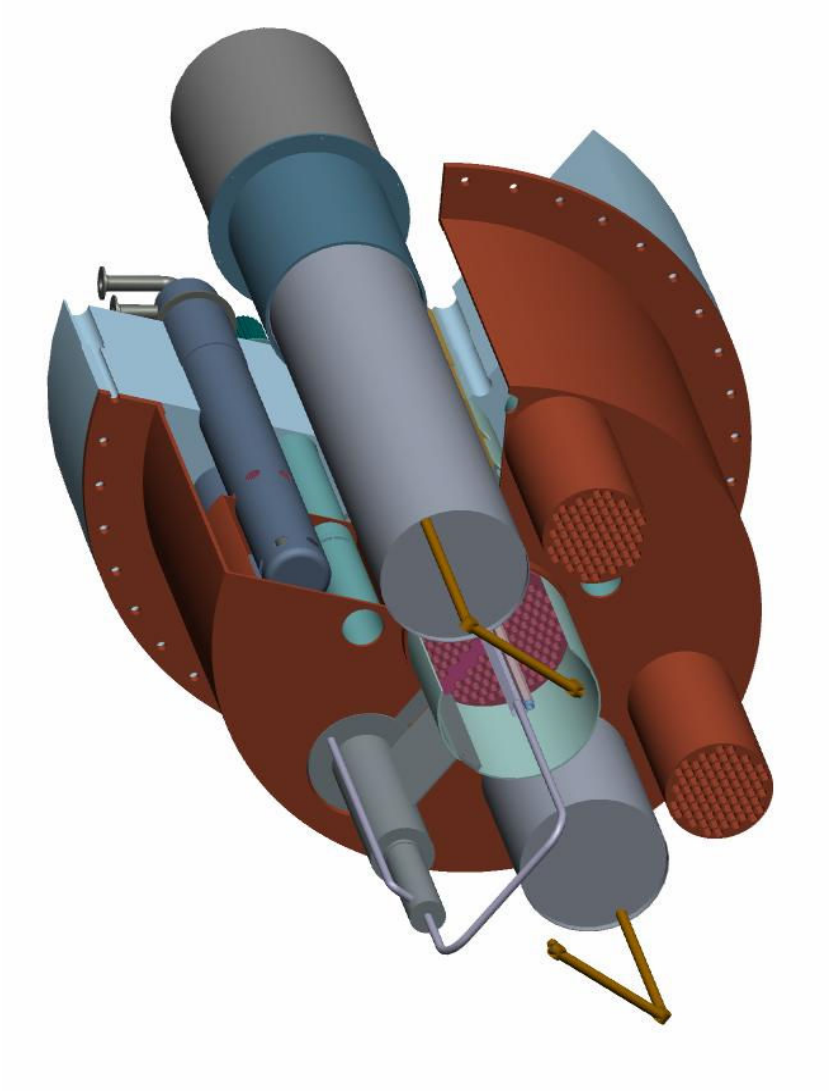

Outline

- Objectives & Rationale
- Core design & performances
- Reactor layout
- Spallation target loop
- Cooling systems
- Accelerator
- Safety
- Operation & Maintenance
- Innovative design elements
- Project Schedule & Conclusion

Spallation target requirements & boundary conditions

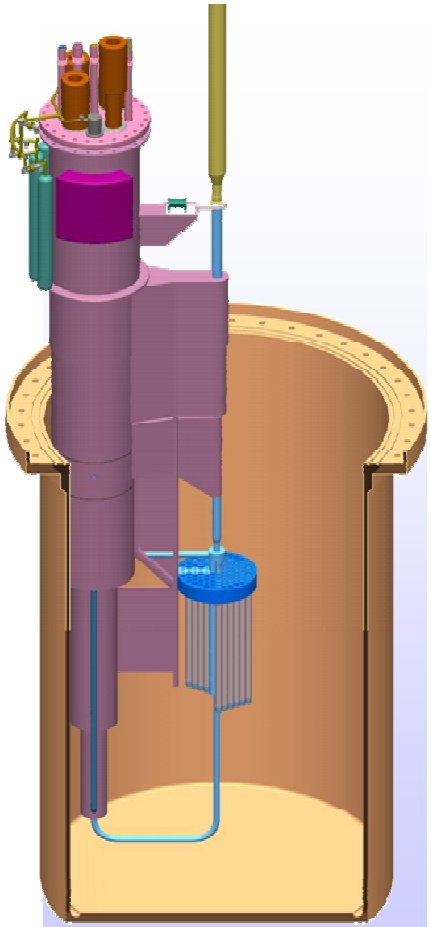

- produce 10^{17} neutrons/s to feed subcritical core @ k_{eff}=0.95
- accept megawatt proton beam
  - ➢ 600 MeV, 2.5-3 mA → ~1-1.2 MW heat
- fit into central hole in core (3 fuel hexagons removed)
  - ➢ compact target
  - ➢ off-axis geometry
- match MYRRHA purpose as experimental irradiation machine
  - ➢ flexible remote handling
- survive (lifetime)

Target design
Conceptual properties

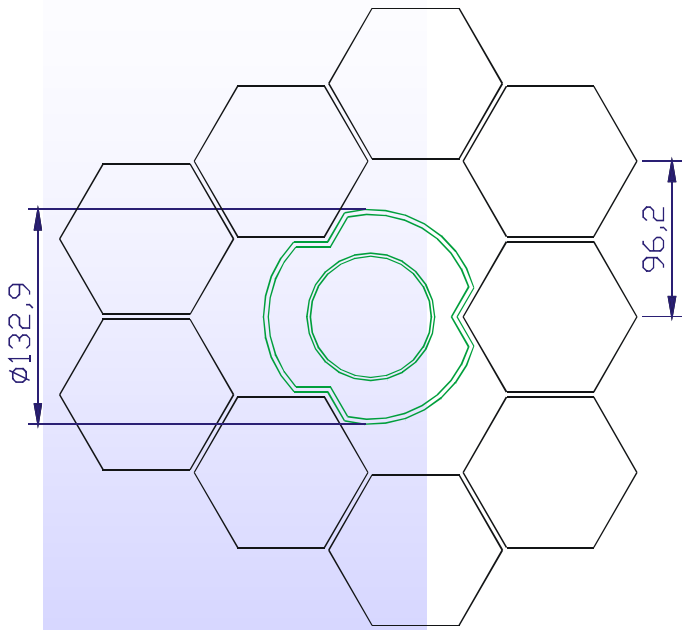

- windowless target
  - beam current density
  - avoid most loaded part of system
  - precautions in case of window failure to be taken anyway
- vertical coaxial confluent LBE flow
  - space consideration
  - free surface formation
- target inflow via 3-feeder design
- off axis servicing unit (pumps…)
  - leave top & bottom of core free → accessibility
  - loop away from high radiation zone → lifetime

Target design
Conceptual properties

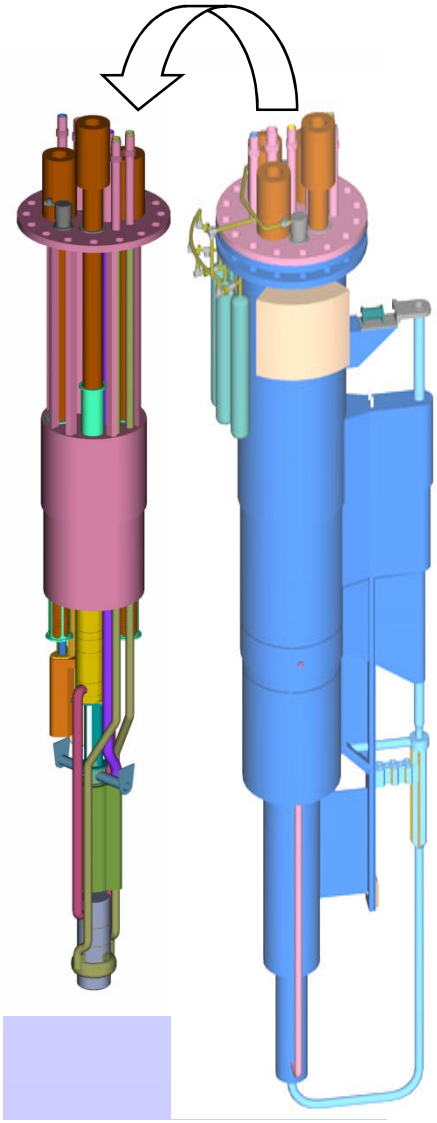

- PbBi as target material
  - low temperature possible (T_{melt}≈125 ° C)
  - low vapour pressure
  - identical to primary coolant
- PbBi flow & cooling
  - forced convection (13 l/s nominal flow)
  - $T_{max(LBE\ surface)}$=450° C; ΔT< 100 ° C
  - heat exchanger to main vessel coolant
- vacuum requirements
  - pressure above target <10^{-3}-10^{-4} mbar
  - confinement of volatile spallation products
- service by remote handling
  - entire spallation unit removable from main vessel after core unloading
  - separate sub-unit with all active elements

Target principle

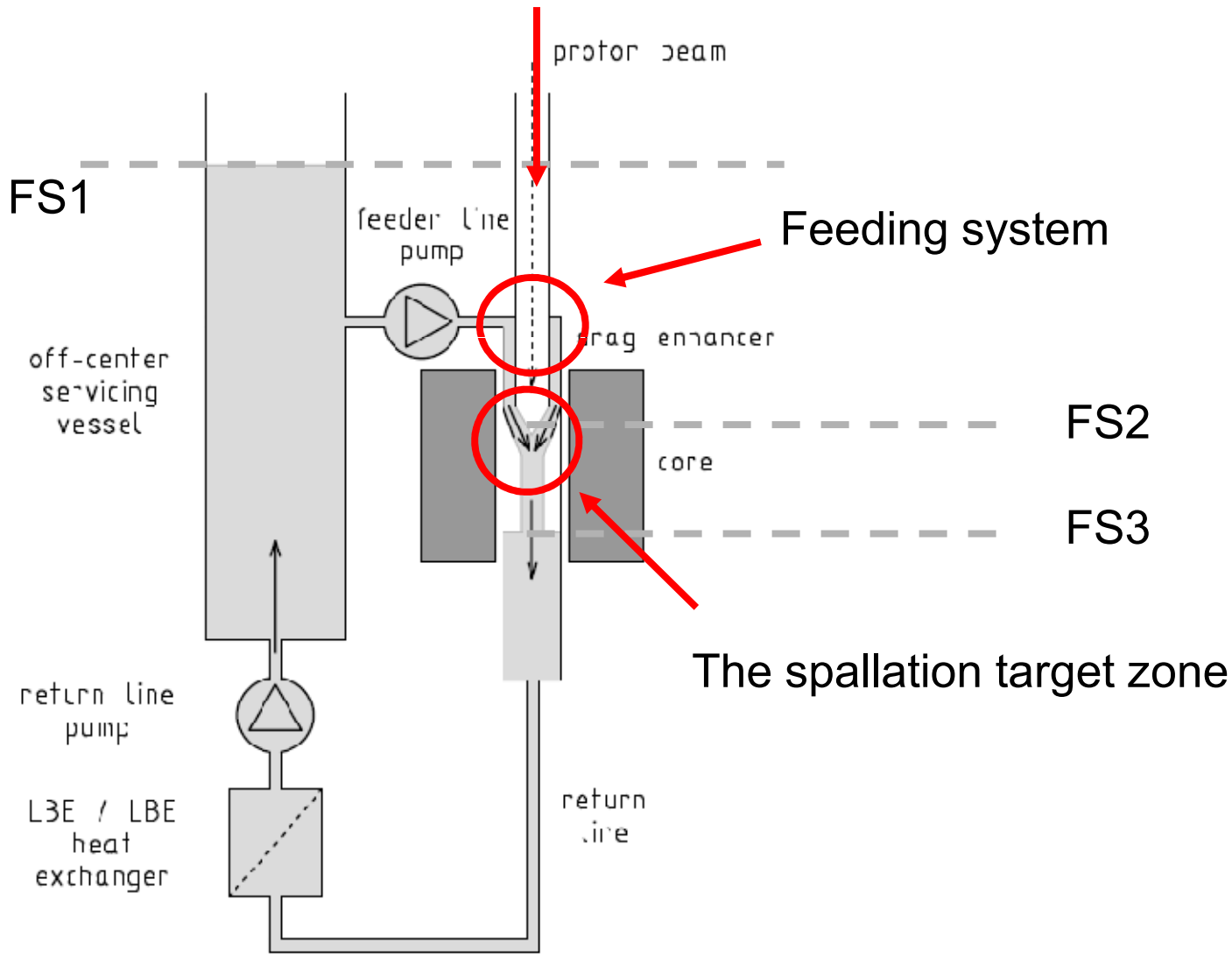

Windowless spallation target nozzle

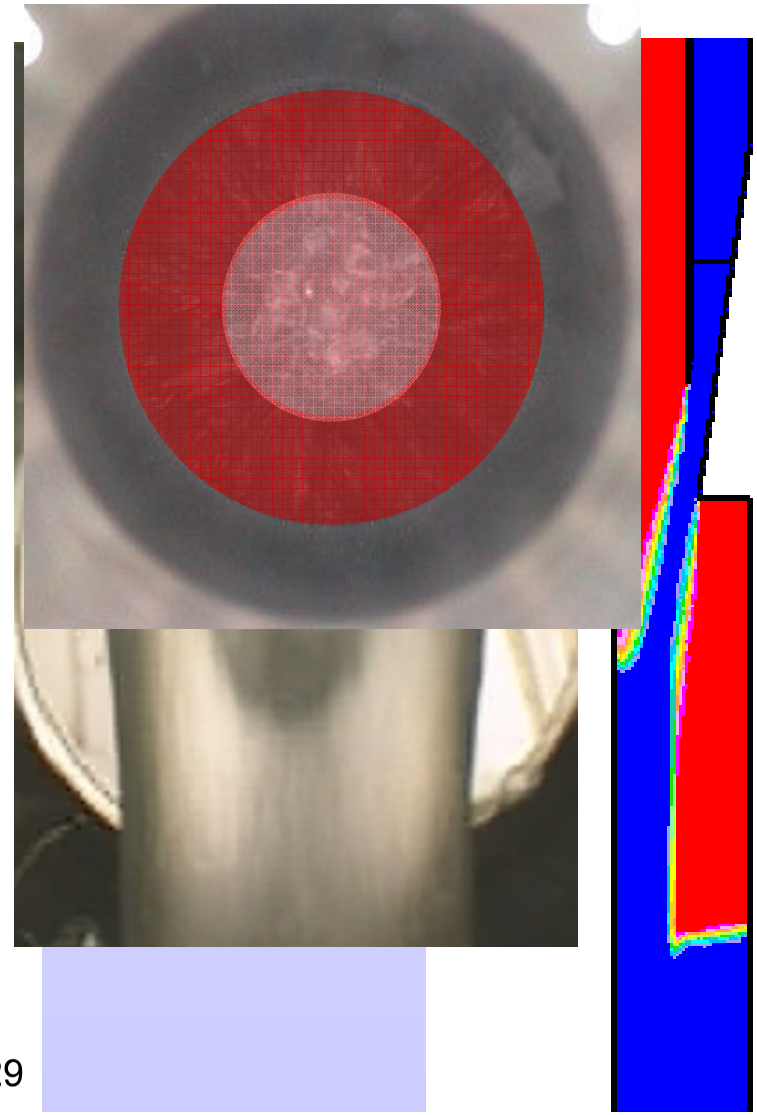

Formation of target free surface

- forced detachment
  - decoupled inlet-outlet flow required for stability
  - buffer during beam transients
- recirculation zone
- level follow-up (slow)
  - LIDAR detection
  - discrete level meters
- proton beam distribution
  - circular path (200 Hz)
  - avoid recirculation zone heating

Removal of spallation loop

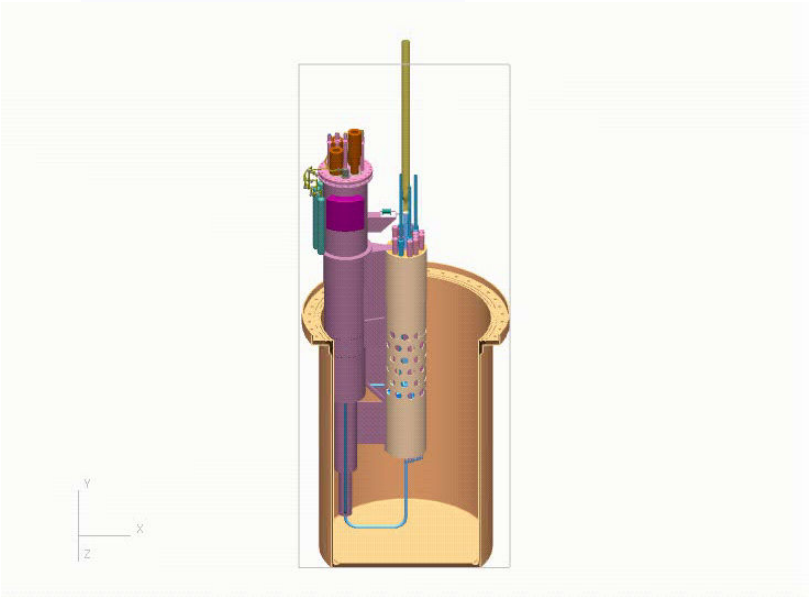

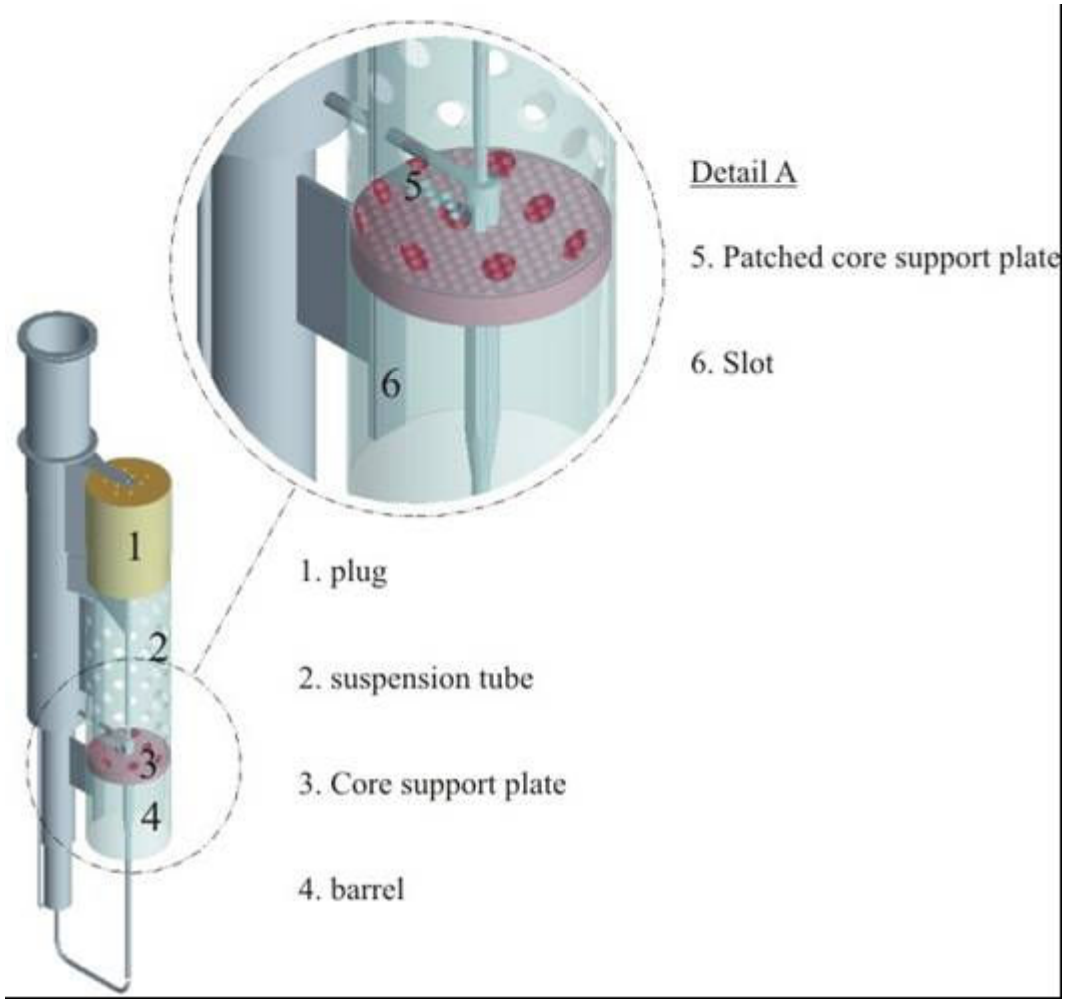

Outline

- Objectives & Rationale
- Core design & performances
- Reactor layout
- Spallation target loop
- Cooling systems
- Accelerator
- Safety
- Operation & Maintenance
- Innovative design elements
- Project Schedule & Conclusion

Passive secondary and tertiary cooling system

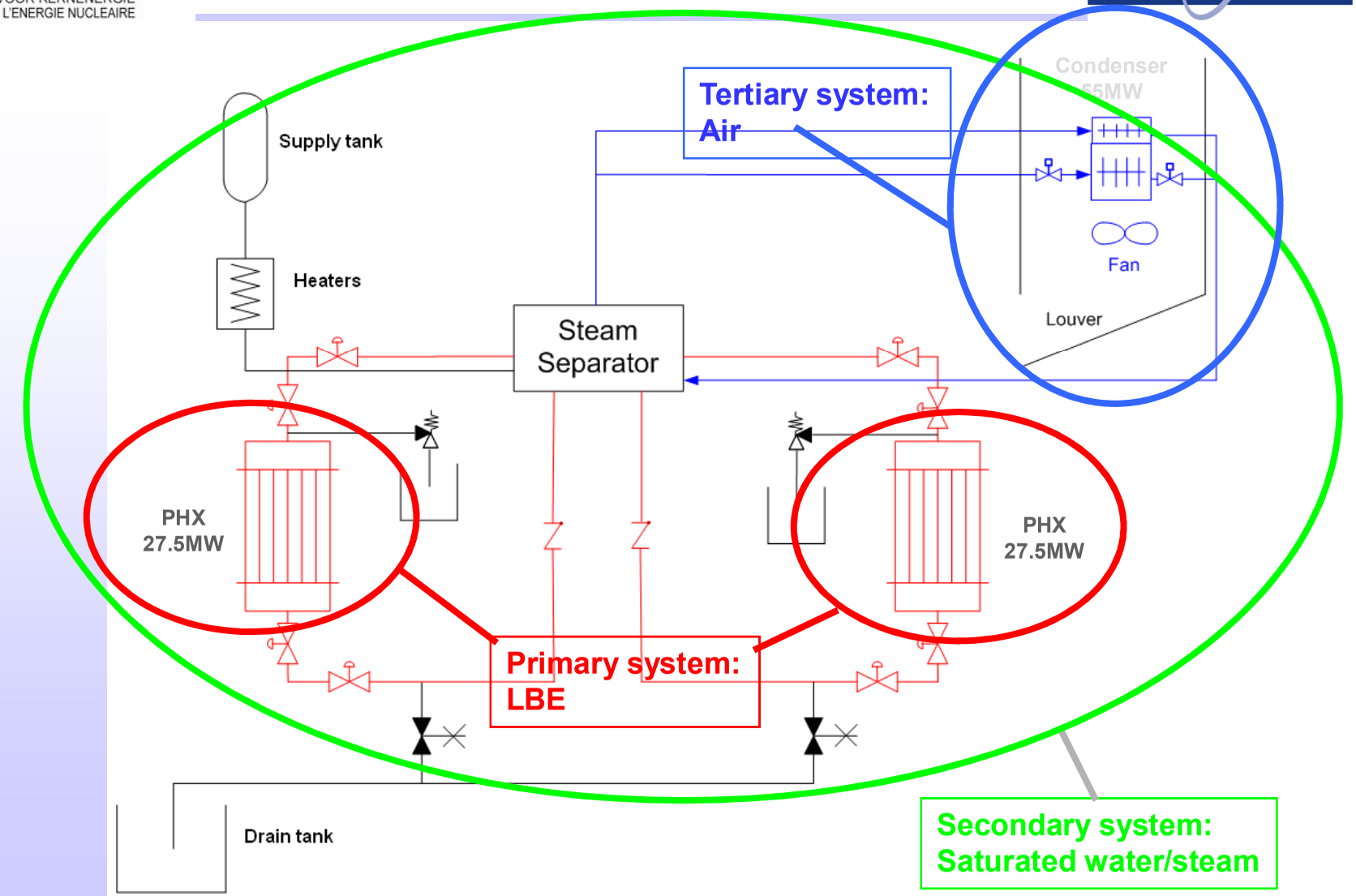

Decay heat removal system

- Decay heat removal (DHR) through secondary loops
  - 2 independent loops
  - redundancy (each loop has 100% capability – min. sized for 3% continuous power)
  - passive operation (natural convection in primary, secondary and tertiary loop)
- Ultimate DHR through RVACS (natural convection)

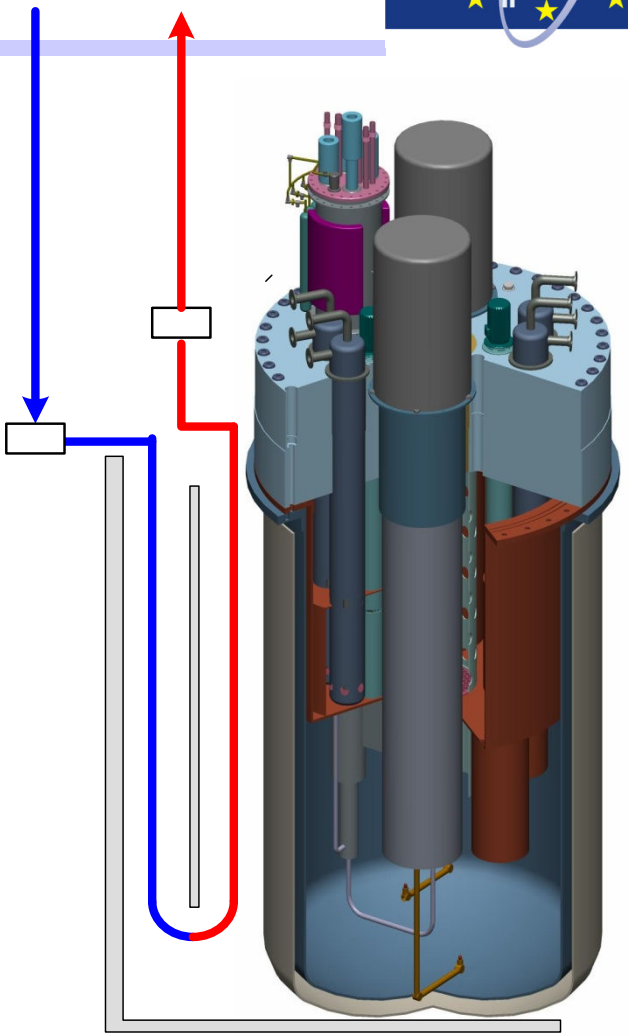

Outline

- Objectives & Rationale
- Core design & performances
- Reactor layout
- Spallation target loop
- Cooling systems
- Accelerator
- Safety
- Operation & Maintenance
- Innovative design elements
- Project Schedule & Conclusion

High Power Proton Accelerator

Proton energy	600 MeV
Beam intensity (CW)	4 mA
Beam entry	vertically from above
Beam stability	energy ±1% intensity ±2%, size ±10%
Footprint on target	“donut”-shaped, r_{in} 25 mm r_{out} 50 mm
Reliability	Trips > 1s = max 5 per cycle
Time structure	CW, I=0 holes 200 μs, 1 Hz pulsed mode capable (50 Hz)

advantages LINAC

- a LINAC totally avoids the cyclotron's difficulty of extraction ➔ flexibility in beam current increase
- adding modules to the LINAC conveniently rises its final energy flexibility in beam energy increase
- the condition for fault tolerance is not satisfied in a cyclotron: no modularity

Reliability

parallel scheme (redundancy)

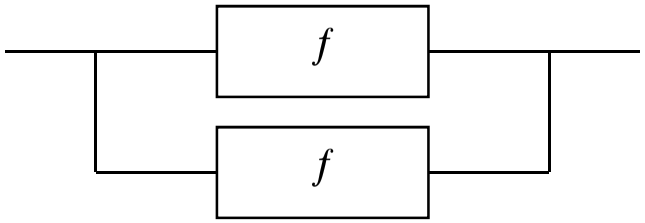

serial scheme: IF

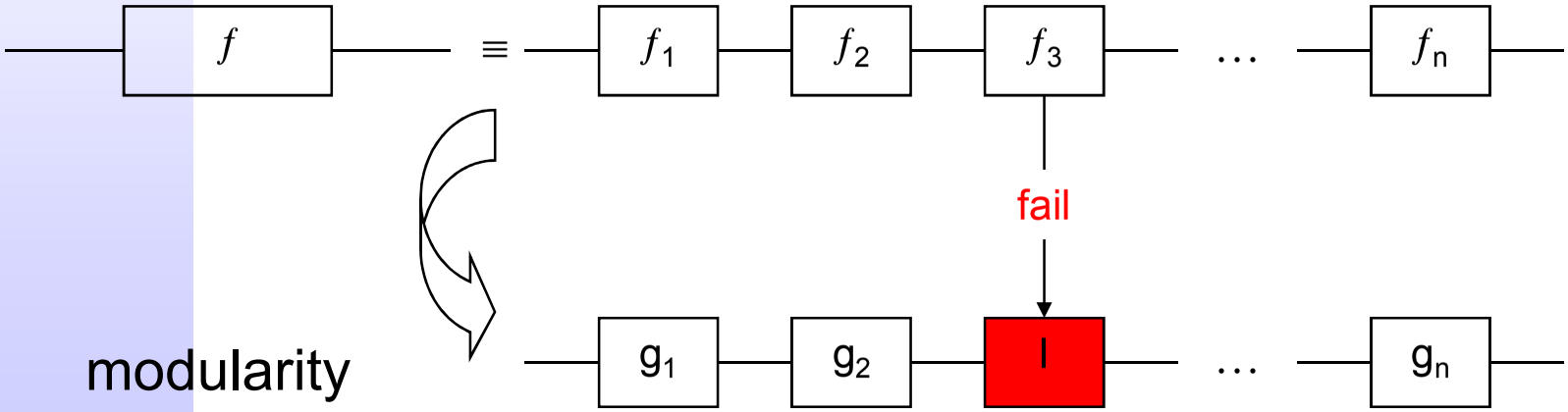

modularity

Which LINAC ?

- Fundamentally: Normal Conducting (NC) or Super Conducting (SC) RF cavities ?

- SC advantages, esp. for continuous wave

  - lower power consumption
  - higher accelerating fields → shorter LINAC
  - transverse space for beam is larger → less beam losses
  - stability (cryogenic temperature)
  - modularity

International collaboration for the LINAC

- The accelerator layout design comes from a collaboration initiated in the EURATOM FP5 project “PDS-XADS”, and continued in the EURATOM FP6 “IP-EUROTRANS”, with main partners
  - CNRS (France)
  - CEA (France)
  - INFN (Italy)
  - Univ. Frankfurt (Germany)
  - IBA (Belgium)

- Design is based on existing designs (SNS, SPIRAL2) and ongoing R&D

LINAC Lay-out

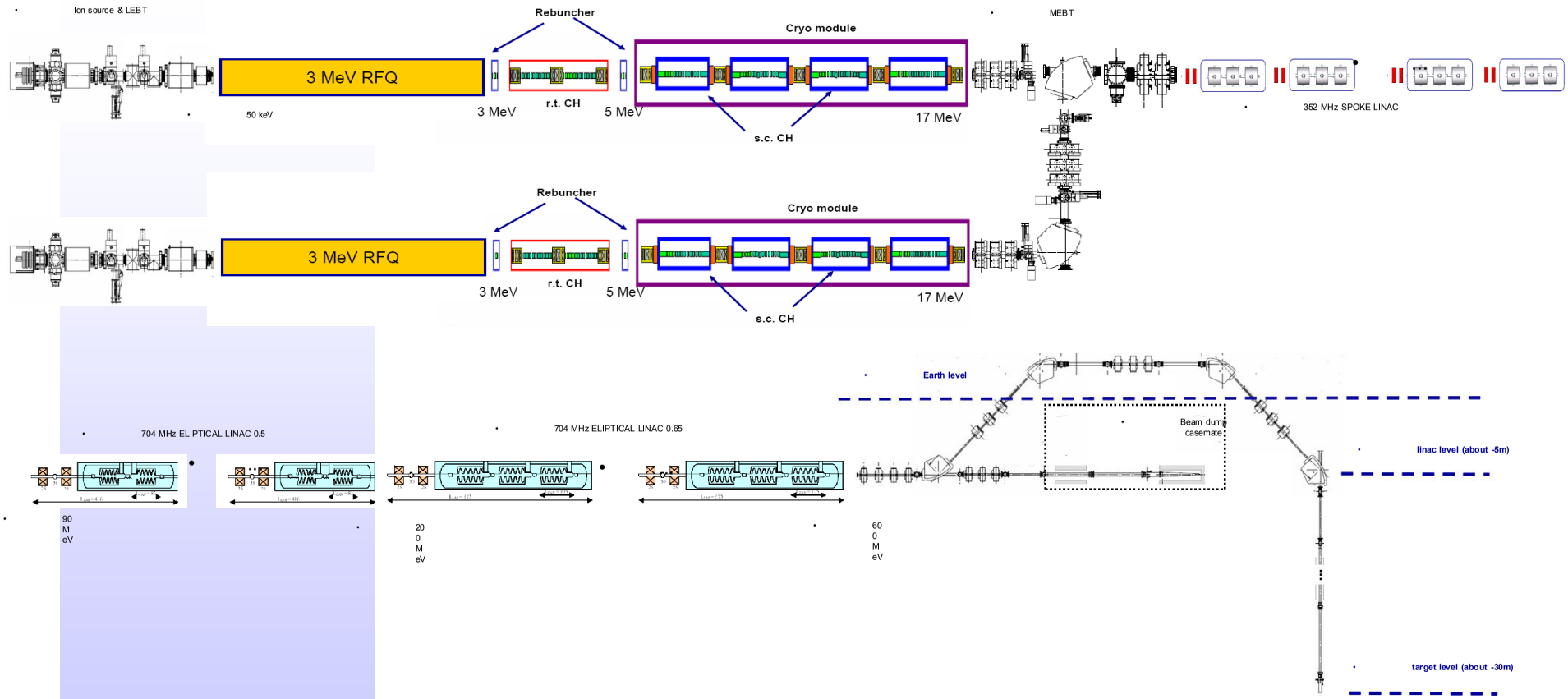

Outline

- Objectives & Rationale
- Core design & performances
- Reactor layout
- Spallation target loop
- Cooling systems
- Accelerator
- Safety
- Operation & Maintenance
- Innovative design elements
- Project Schedule & Conclusion

Radiation safety

- Accelerator shielding by concrete shielding, soil cover
- Reactor cover shielding (beam tube)
- Lateral concrete shielding of core vessel
- Coolant activation
  - Main activation product
    ^{210}Po (~660 g)
  - Activity
    9.10^{8} Bq/kg

Reactivity balance

	$\Delta\rho$ (pcm)	ρ (pcm)	k_{eff}
Criticality margin	1000	0	1.00000
Remaining margin	218	-1000	0.99010
Core compaction	1620	-1218	0.98797
Target flooding	144	-2838	0.97240
Maximal voiding effect	300	-2982	0.97104
Expansion	490	-3282	0.96822
LBE temperature effect	480	-3772	0.96365
Doppler effect	460	-4252	0.95921
Sub-criticality		-4712	0.95500

List of initiating events

- Primary HX tube rupture
- Station blackout
- Fuel assembly blockage
- Spurious beam trip
- Water ingress in core
- Loss of flow in primary cooling system (LOF)
- Loss of heat sink (LOHS)
- Primary vessel break
- Overcooling of the primary system
- Uncontrolled beam start up

Protected cases (proton beam off) and unprotected cases (proton beam on) are considered

Safety criteria

- **Fuel** (MOX): no melting
  - $T < 2707^{\circ}$ C for fresh fuel
  - $T < 2673^{\circ}$ C for 100 MWd/kg burnup
- **Cladding** (T91):
  - steady state
    embrittlement ⇐ $200\text{-}300^{\circ}$ C $\leq T \leq 500\text{-}550^{\circ}$ C ⇒ corrosion
  - transient
    no creep rupture $\Rightarrow T < 800^{\circ}$ C for max. 30 min
- **Coolant** (LBE): no freezing $\Rightarrow T > 138^{\circ}$ C

MYRRHA Draft2: Safety analysis results (I)

Protected accidents

Accident	Fuel	Cladding	Coolant	Conclusion
LOF	OK	OK	OK	☺
LOHS	OK	OK	OK	☺
LOF&LOHS	OK	OK	OK	☺
Overcooling	OK	OK	Freezing after 3 min	😐
TOP	max Dr =2500 pcm	idem	OK	😐
SA blockage	OK	max F_R=30%	OK	😐

MYRRHA Draft2: Safety analysis results (II)

Unprotected accidents

Accident	Fuel	Cladding	Coolant	Conclusion
LOF	OK	T > 700° C after 10s	OK	☹
LOHS	OK	T > 700° C after 10 min	OK	☹
LOF&LOHS	OK	T > 700° C after 10s	OK	☹
Overcooling	OK	OK	Freezing after 14 min	😐
TOP	max Dr = 2000 pcm	idem	OK	😐
SA blockage	OK	max F_R= 40%	OK	😐

Improvements in EUROTRANS

- unprotected events addressed by improvement of natural convection
  - core hydraulic resistance reduced
  - level difference between core and PHX increased (1,2 m → 2 m)
- boiling water HX instead of pressurized water HX to mitigate tube rupture consequences
- ultimate DHR by RVCS system

Maximum clad temperature during a ULOF

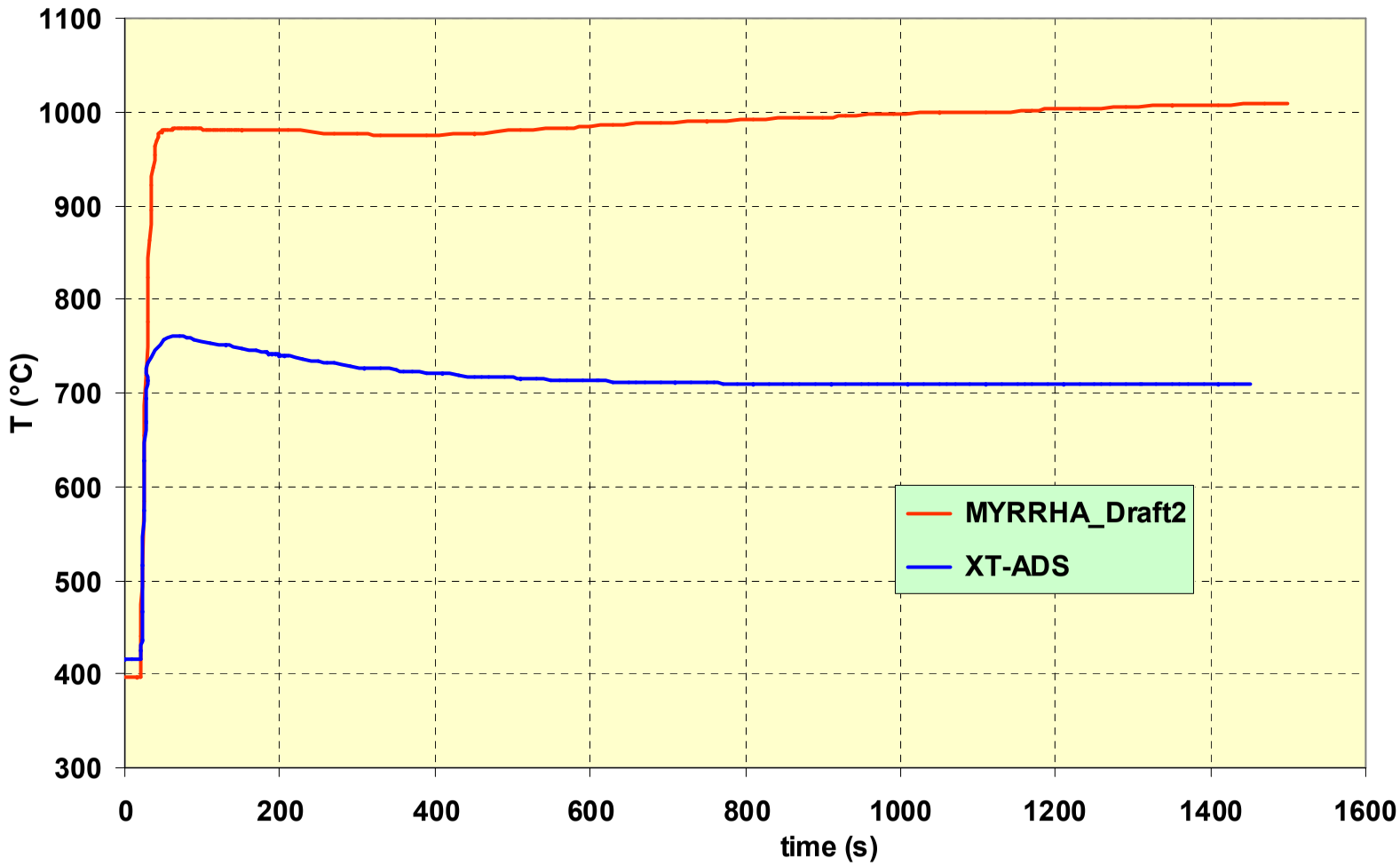

Outline

- Objective & Rationale
- Core design & performances
- Reactor layout
- Spallation target loop
- Cooling systems
- Accelerator
- Safety
- Operation & Maintenance
- Innovative design elements
- Project Schedule & Conclusion

Operation & Maintenance

Operation plan

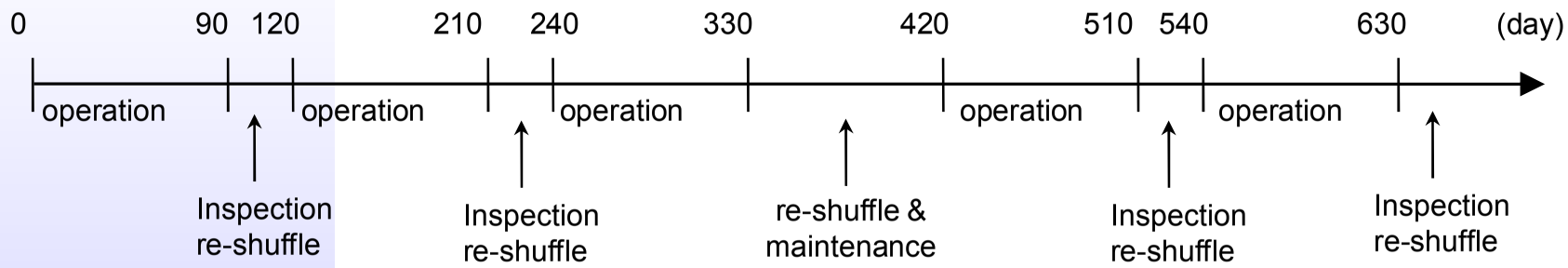

- 90-day operation with 30-day or 90-day break
- All the fuel assemblies are moved after each of 90-day operation

Core reshuffling scheme

- 10 fuel assemblies belong to a batch
- 10 assemblies in the position indentified in the figure as 1 to 10 are moved to position 11 to 20
- assemblies in 11 to 20 are transferred to 21 to 30, and so on.
- 10 fresh fuels are introduced to position 1 to 10

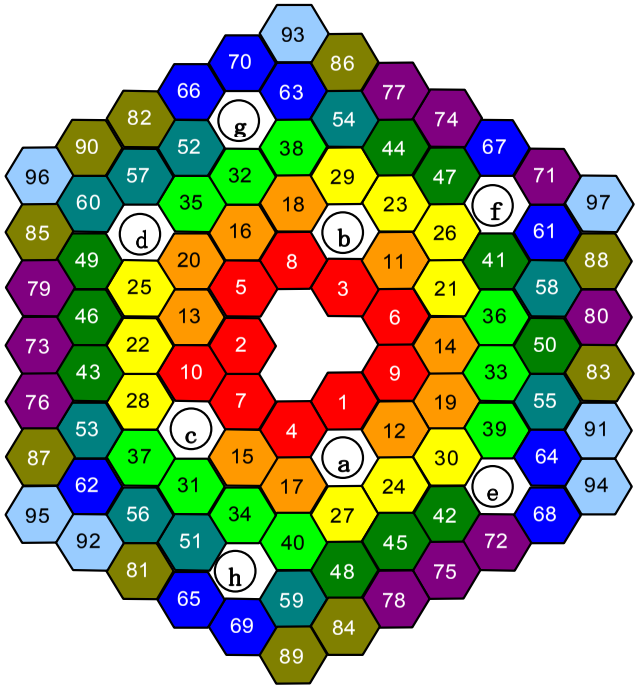

The total number of fuel assemblies is determined at every beginning of 90-day operation as to set k_{eff} to 0.955.

Constant current (nr FA: 65→80)

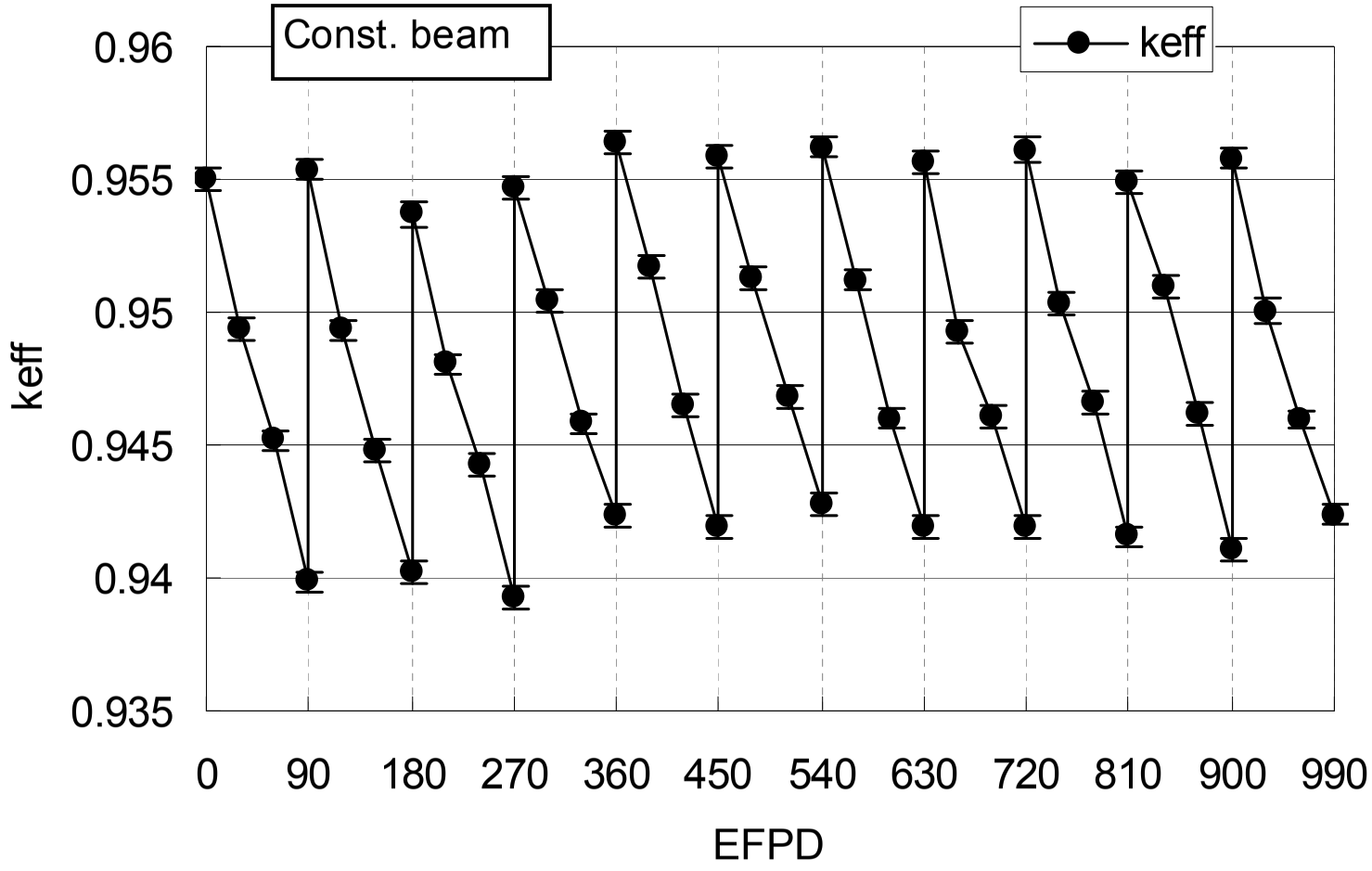

Subcriticality measurement

- on-line monitoring with current-to-flux indicator

- reactivity measurements at controlled beam trips:
  - 200 µs beam holes for on-line sub-criticality level measurement

GUINEVERE experimental programme

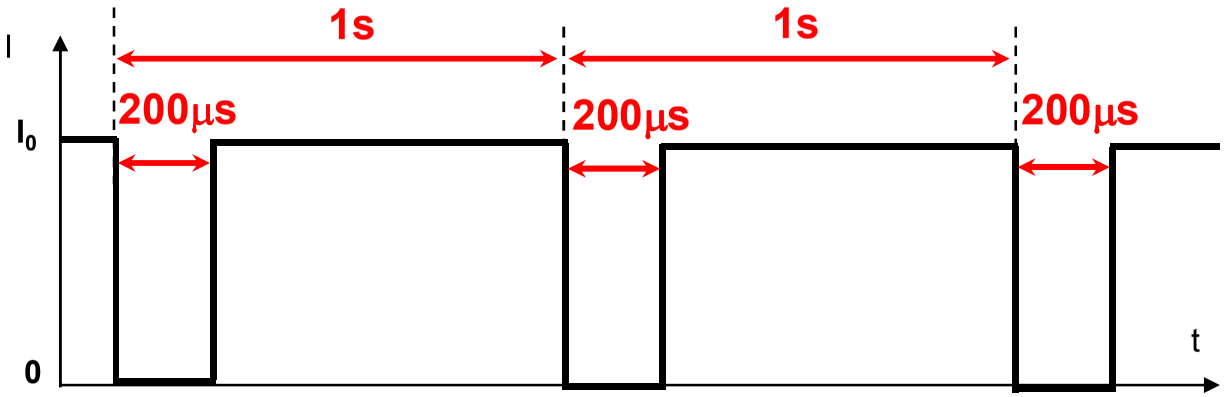

In Service Inspection with US & In-vessel Repair

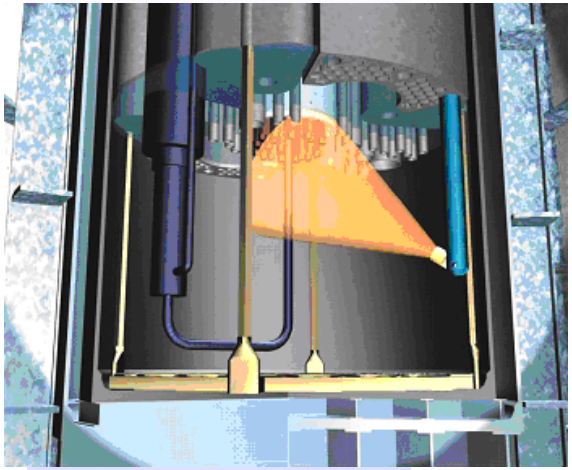

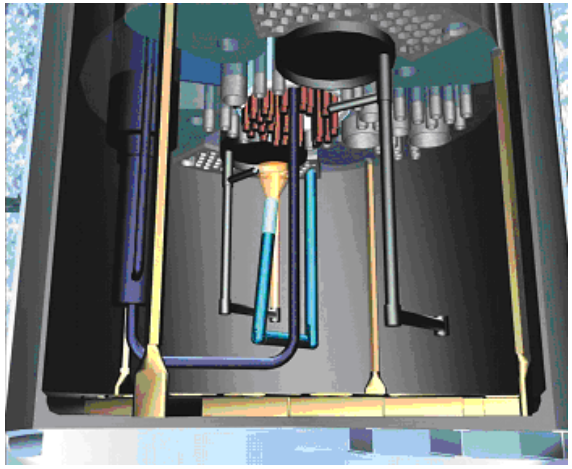

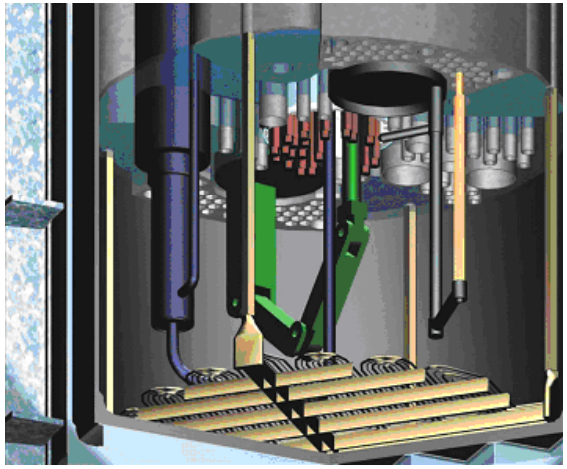

O.T.L. concludes positive on the feasibility

Ex-vessel remote handling

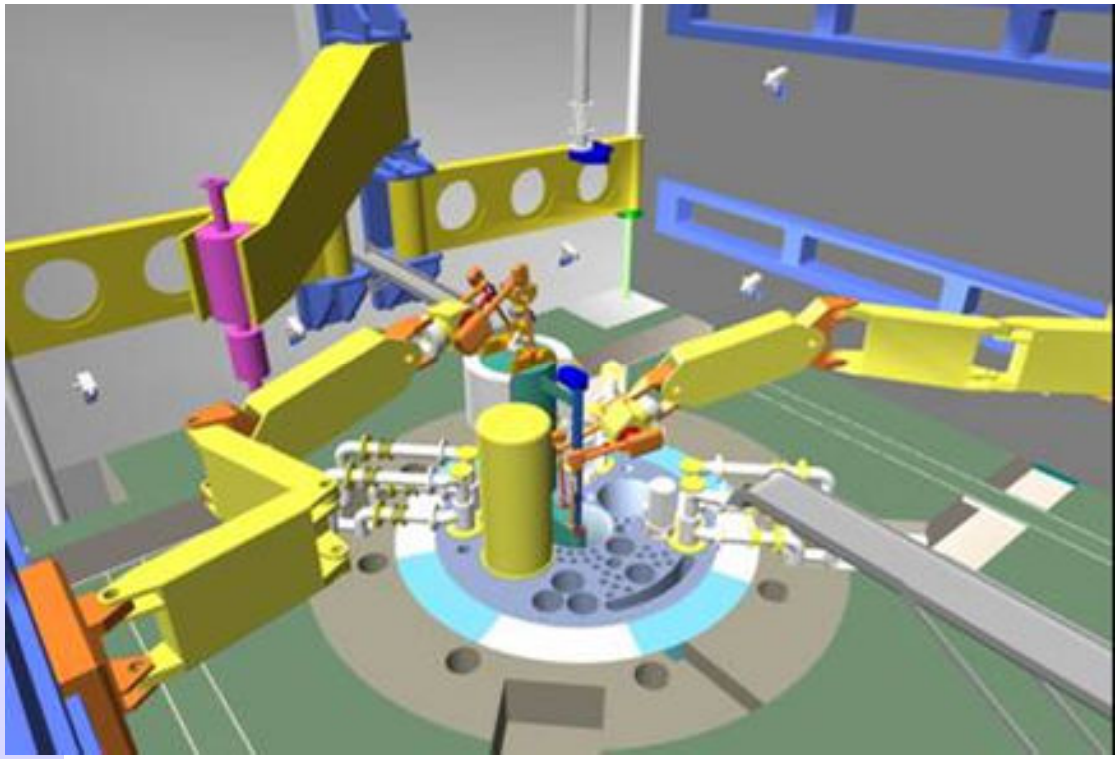

O.T.L. concludes positive on the feasibility

Outline

- Objectives & Rationale
- Core design & performances
- Reactor layout
- Spallation target loop
- Cooling systems
- Accelerator
- Safety
- Operation & Maintenance
- Innovative design elements
- Project Schedule & Conclusion

Innovative design elements

Objectives	Requirements	Choices
Flexible Fast Spectrum Irradiation facility	• 1.10^{15} n/cm².s (>0.75 MeV) in large volumes (3 l)	• small target → windowless design • off-centre SL • LM cooling
	• availabilty (65%) • flexibility	• HLM cooling • pool-type • in-vessel storage • FA manipulation beneath core • in-vessel inspection & repair • IPS manipulation above core • replaceability
	• no high temperatures required	• LBE cooling

Innovative design elements

Objectives	Requirements	Choices
ADS demonstration	• high power accelerator • reliability • target	• LINAC (600 MeV, 4 mA)
LFR demo	• HLM technology & components • *Critical mode operation*	• *MYRRHA/FASTEF*
Operational in 2020	• Use of mature technology where possible • Innovation where needed	• FR MOX 30-35% fuel • T91 MS (15-15-Ti AS) • LBE

59

Outline

- Rationale
- Core performances
- Reactor lay out
- Spallation target loop
- Cooling systems
- Accelerator
- Safety
- Operation & Maintenance
- Innovative design elements
- Project Schedule & Conclusion

Status

- Implemented design features
  - Flexibility (core loading from below)
  - High flux (windowless target, LBE coolant)
  - Availability (in-vessel fuel storage, replaceability)
  - Passive & redundant safety (cooling systems)

- On-going R&D support activities
  - LBE technology
  - Components testing & qualification
  - Fuel qualification programme
  - Material qualification programme
  - Reactor Physics support programme

Updated project schedule 2010 - 2024

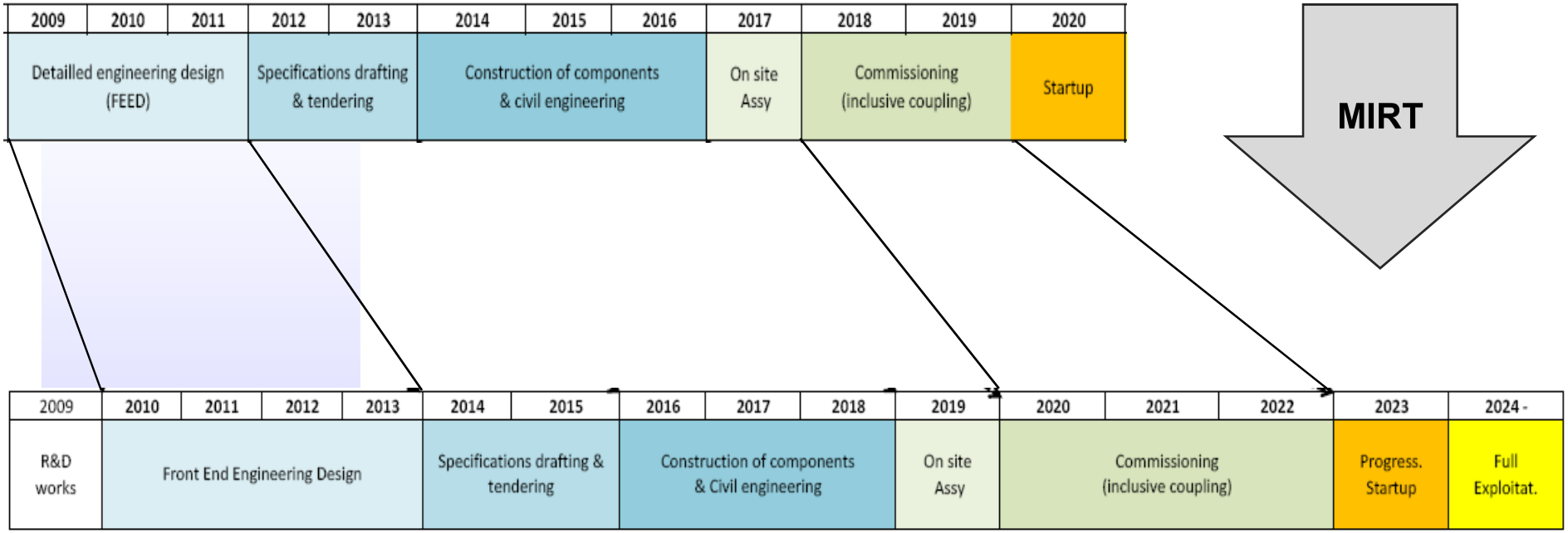

Investment & Operational Costs

2010 - 2023

Investment 960 M€

Building 196 M€	Equipment 370 M€	Engineering 202 M€

Contingencies 192 M€

2024 ~ 2050

Operational Budget

Costs	Revenues
Operational costs 46.6 M€/y	Consortium endowment 25.2 M€/y
	Science & Tech. revenues 17.1 M€/y
Organisation reinforcement 14.6 M€/y	Services revenues >18.8 M€/y

Forging strong partnerships and alliances

in-cash in-kind FP7 EII	Belgium 40% (04.03.2010) France Germany Italy Spain EU ROW (USA?)	Engineering Building Equipment
loan	EIB	

Owners' Consortium Group	• Co-sharing investment cost • Co-sharing exploitation cost
Alliances	• Securing revenues from Users' Communities

Capital expenditure 2010 - 2023

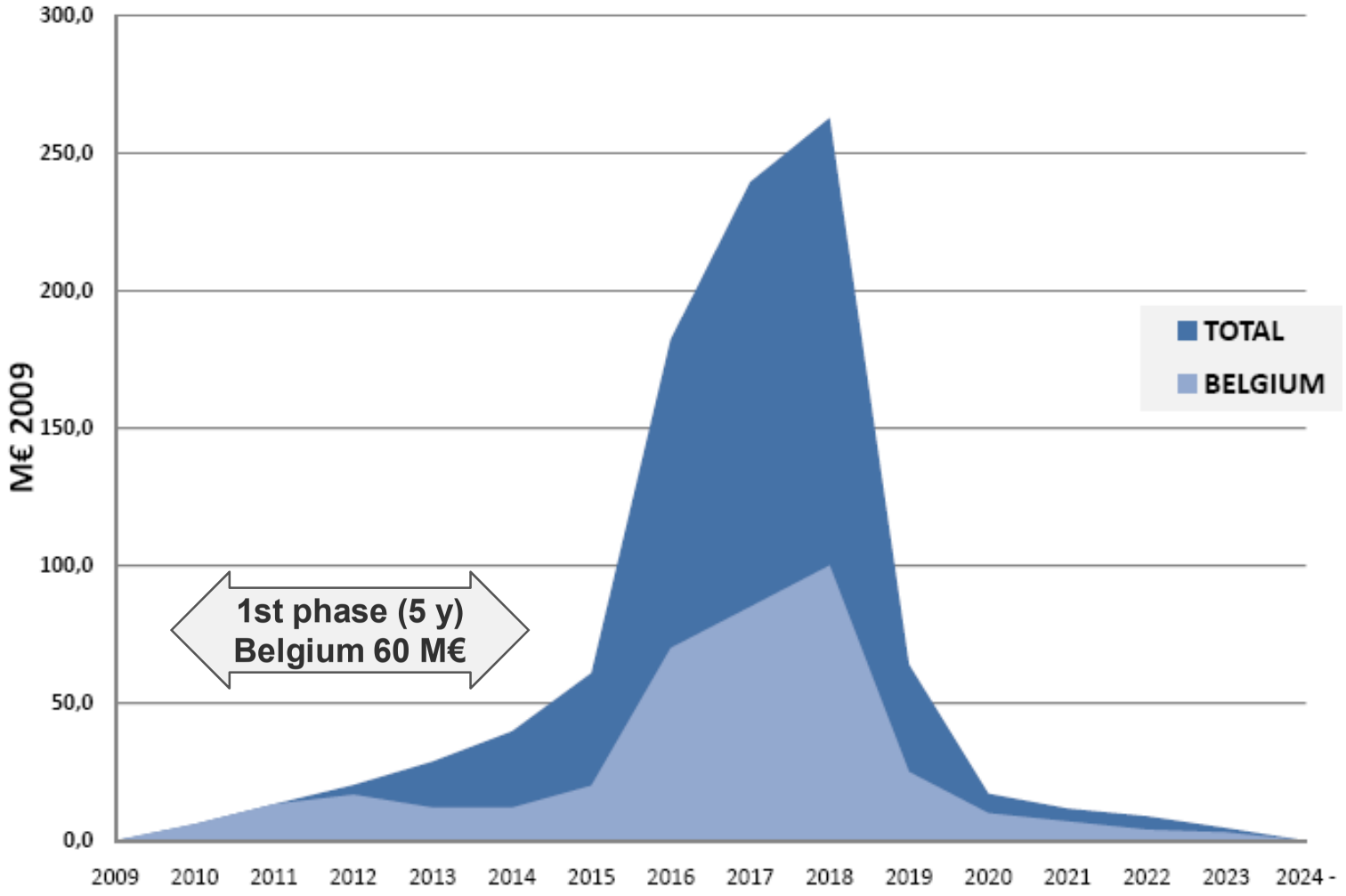

Funding the next phase of work: 2010-2014

1	Minimise technological risks	Accelerator	X Spallation target	X Sub-critical reactor
2	Secure the licensing	**PDP** preliminary dismantling plan	**PSAR** preliminary safety assesment	**EIAR** environmental impact assesment
3	Implement a sound management structure	Central Project Team	Owner Consortium Group	Owner Engineering Team

FEED (Front End Engineering Design)

Conclusion

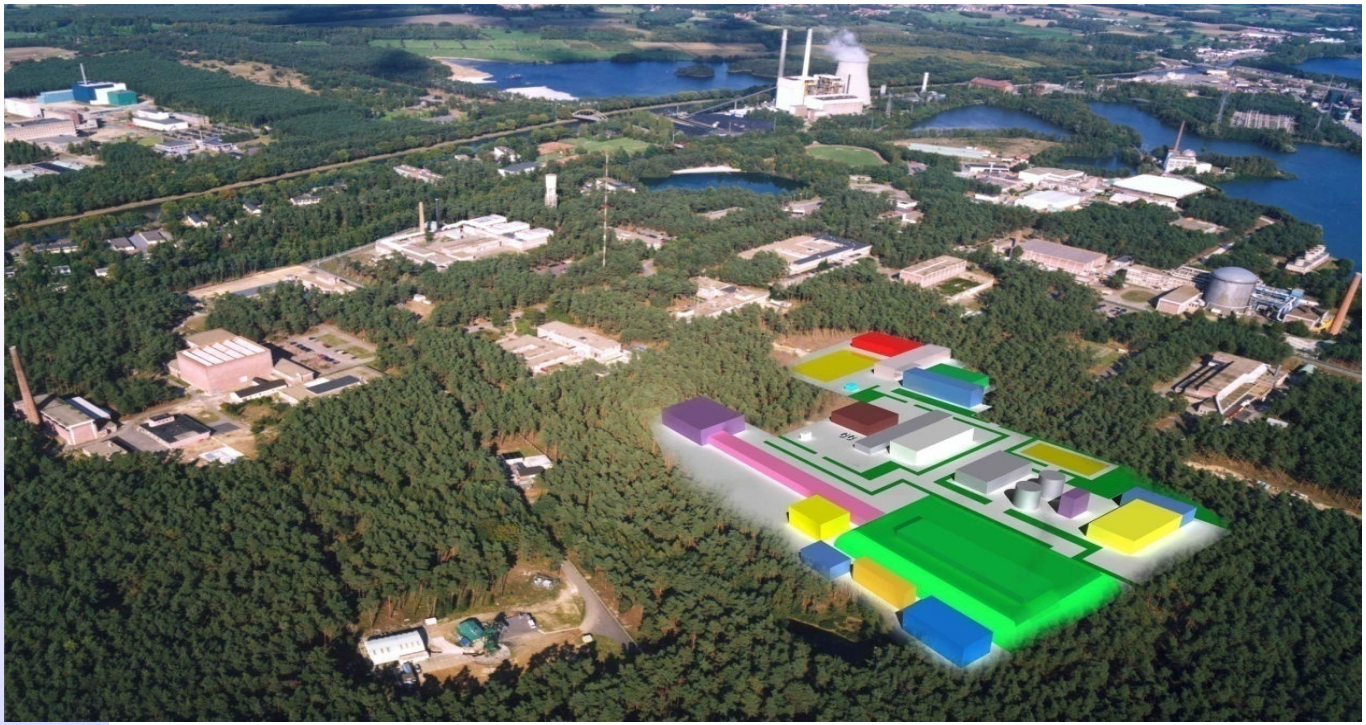

with MYRRHA we will reach

Science towards Sustainability