Pre-injector Upgrade Updates (13 Jul – 18 Aug 2010)

C.Y. Tan

18 Aug 2010

Source Status

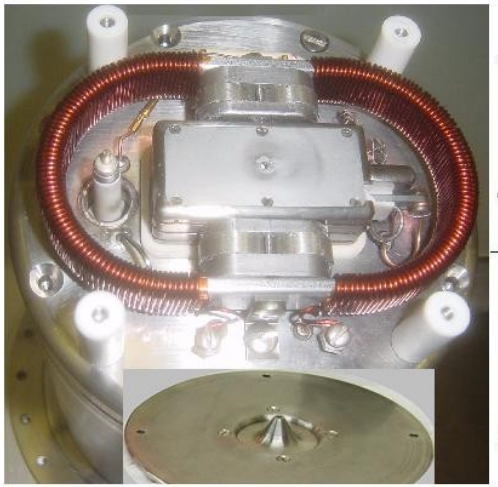

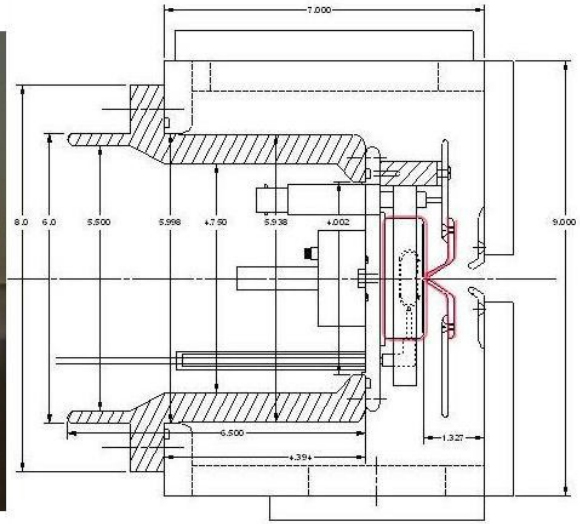

Device	Status	Comments
Source	65mA extracted @25kV extraction voltage, 7.5Hz, 500us	Still waiting for 35kV extraction
Pulser	35kV pulsed.	As of 10 Aug 2010. Safety OK

Pulser

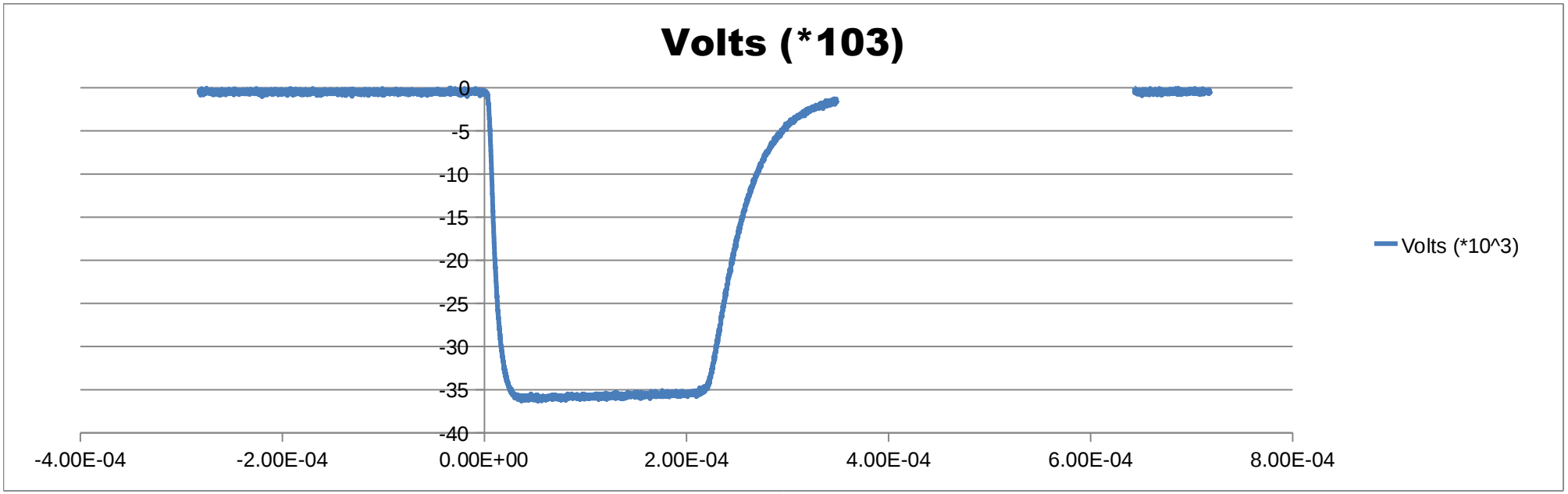

Waiting for safety approval.

LEBT Status

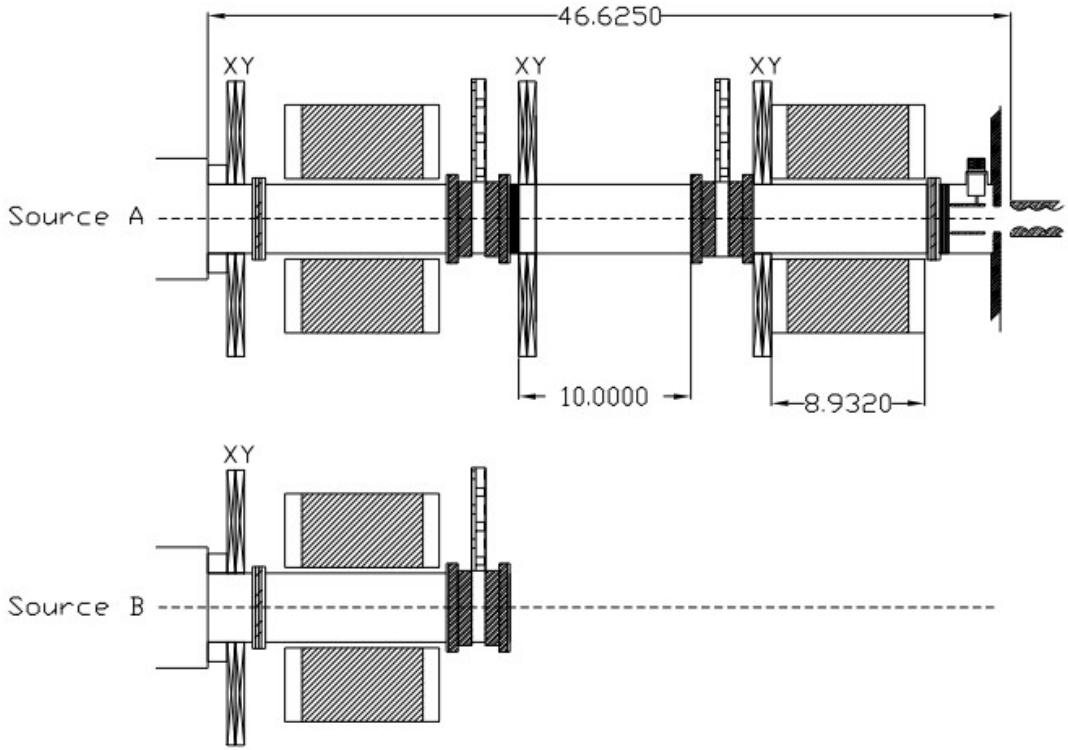

Device	Status	Comments
Power for solenoids		Off the shelf supplies (500A)
Correctors	Bdl=186.5 gauss inches	Vendor sought
Einzel Lens		Beam shot at it at >35kV. No sparking
Pulser for Einzel	To be designed	Build with thyratrons for test.
Solenoids		PO done. Expect 1st solenoid end of year.
Toroid	before sol 2	Cannot be inside tank

Solenoid Drawings

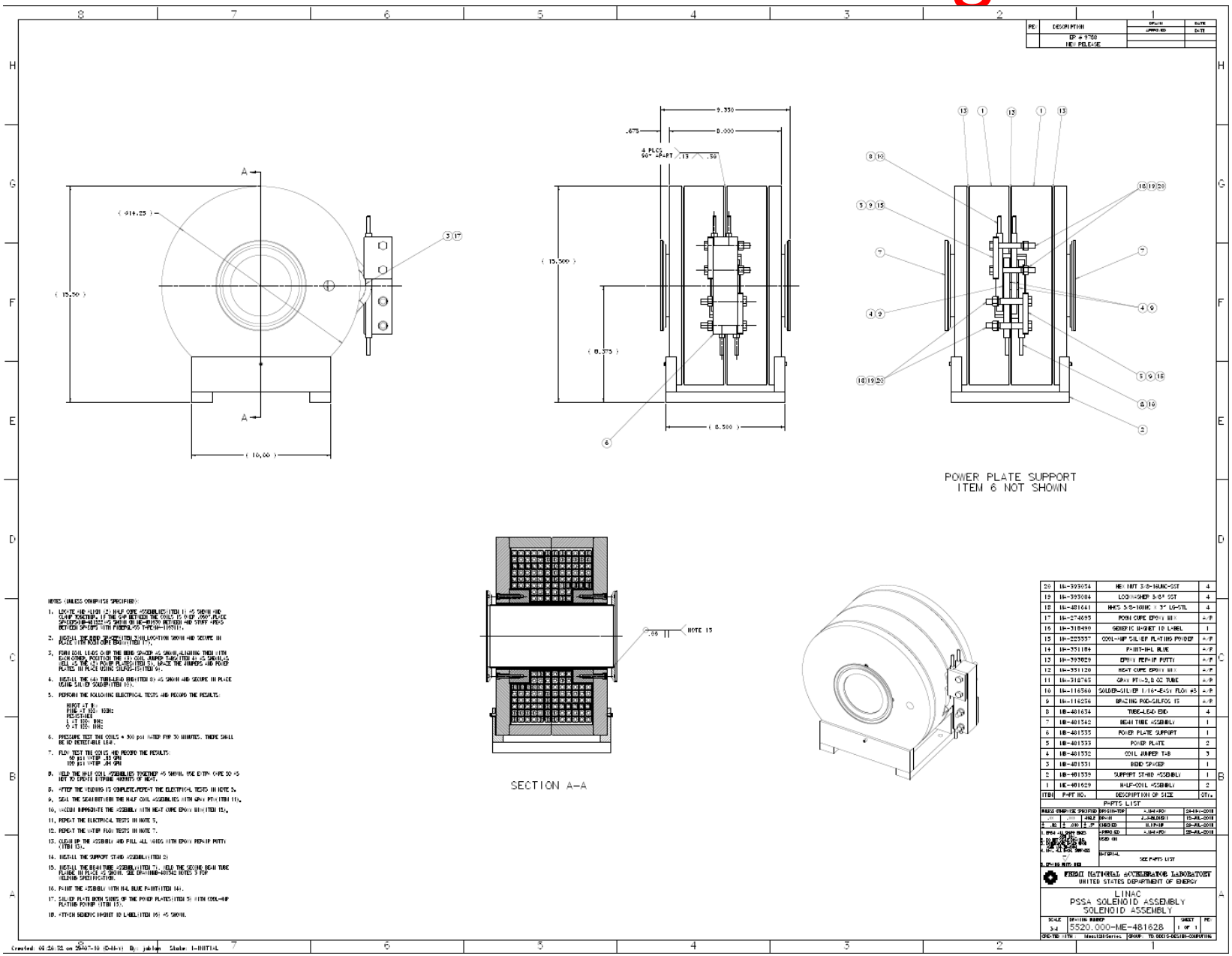

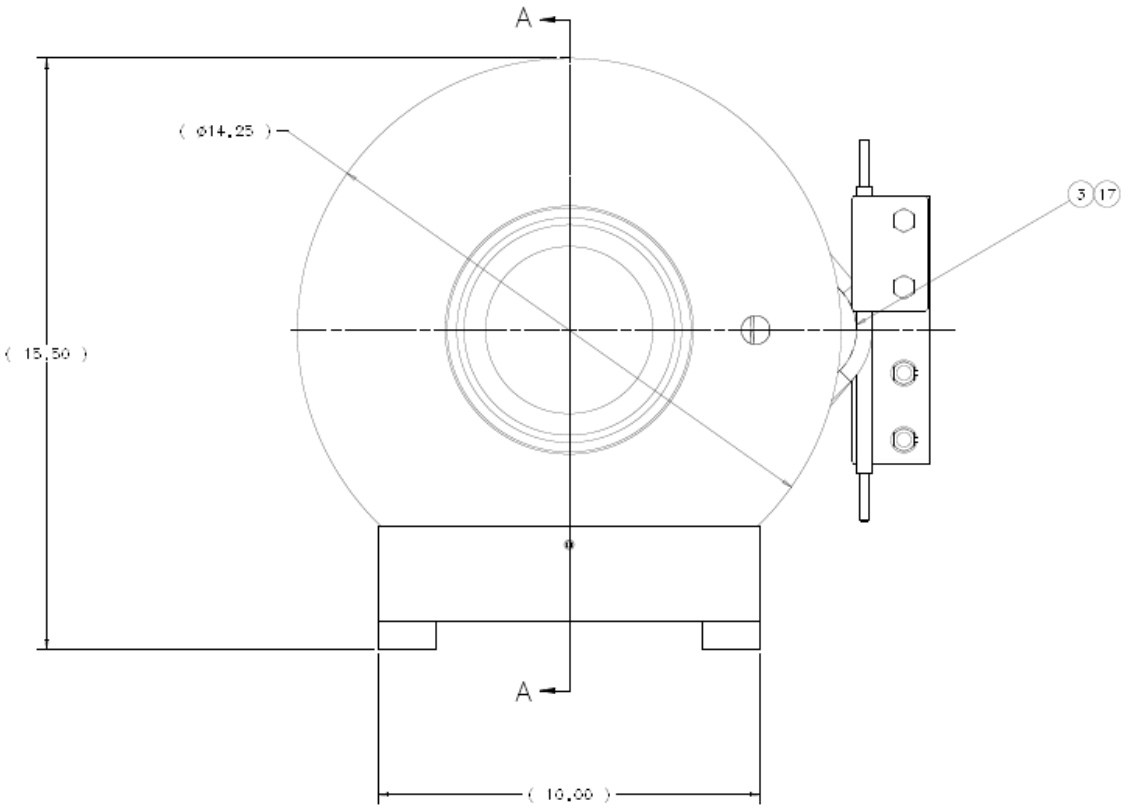

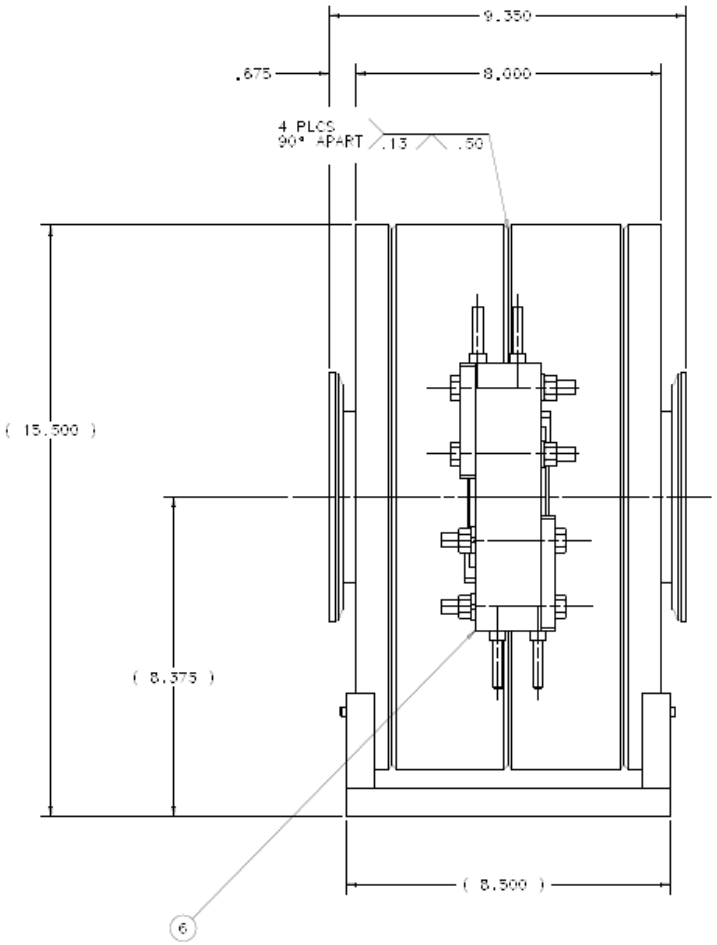

Talk to Sasha about end flanges

MEBT Status

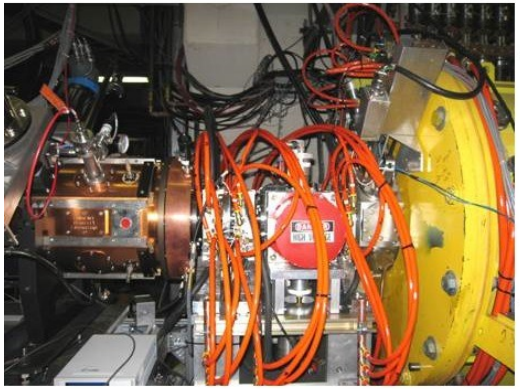

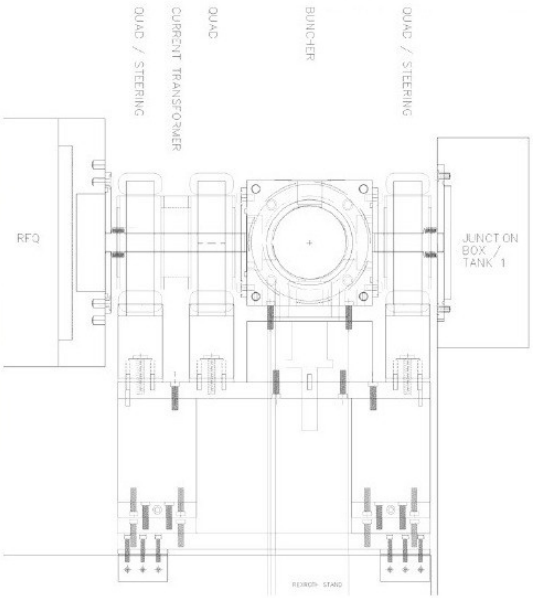

Device	Status	Comments
Quads	Design in progress. Includes dipole corrector in quad.	Question as to whether sextupole component will be a problem.
Buncher	Tests complete	Request for quote. $25k?
Power for quads	Must have specs ok from (TD)	Use linac quad supplies?
Power for buncher		Use present buncher supply in the line.
Connection to Tank	Remove large flange of Tank1	

Buncher

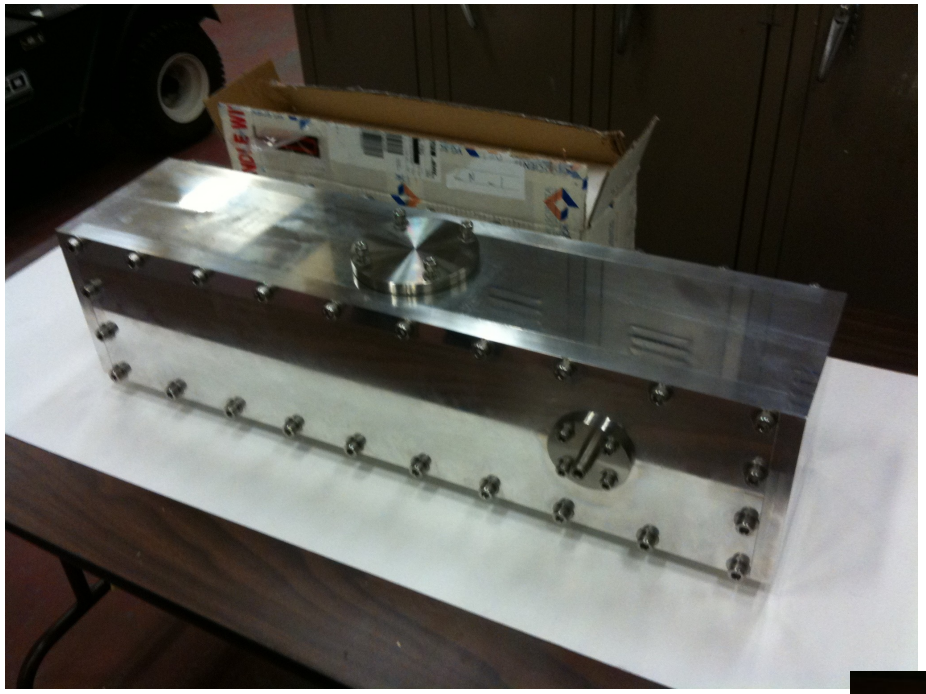

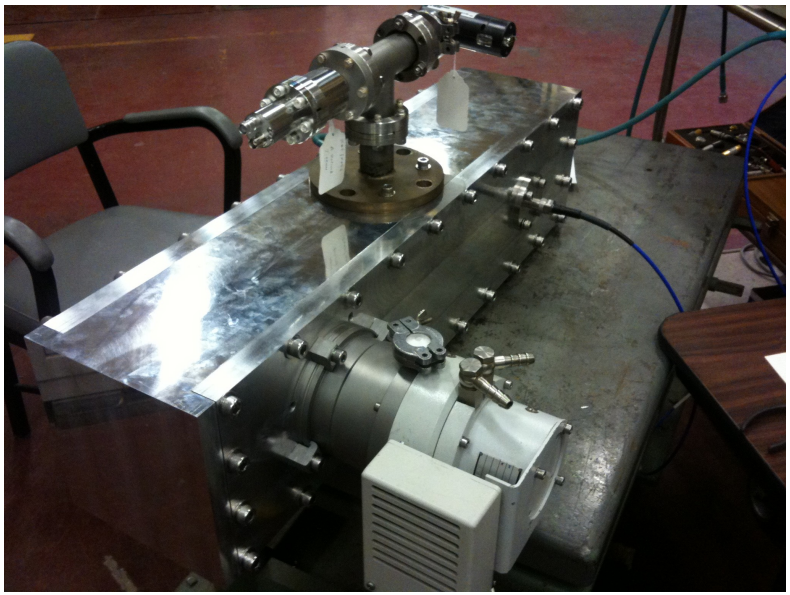

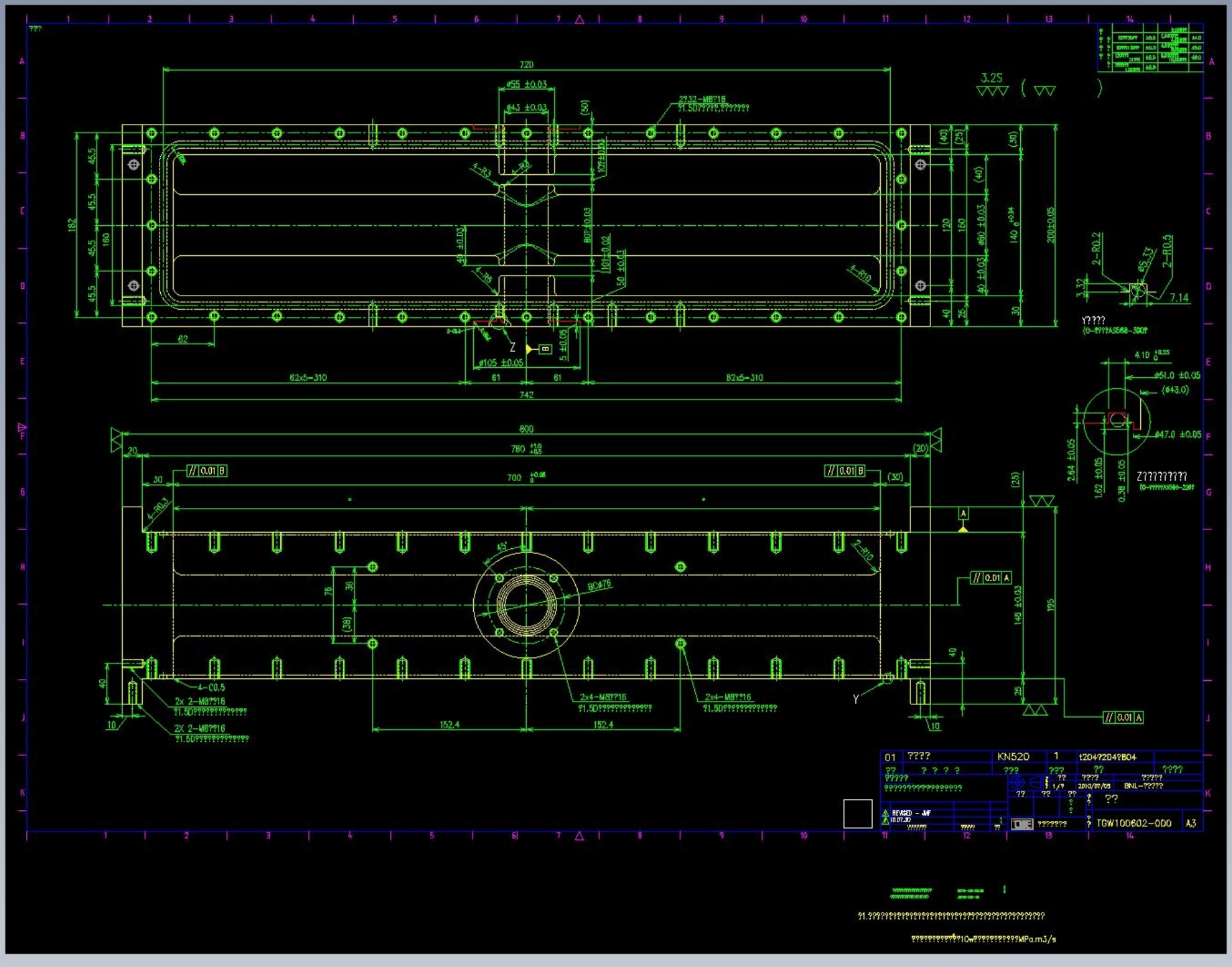
720
ø55 ±0.03
ø43 ±0.03
3.25
182
160
62
62x5=310
ø105 ±0.05
61
742
800
780
700
152.4
2-R0.2
7.14
4.10
ø51.0 ±0.05
ø47.0 ±0.05
2.64 ±0.05
1.62 ±0.05
0.38 ±0.05
145 ±0.03
195
4-C0.5
2x 2-M8?16
2x4-M8?16
KN520
t204?204?B04
TGW100602-000
A3

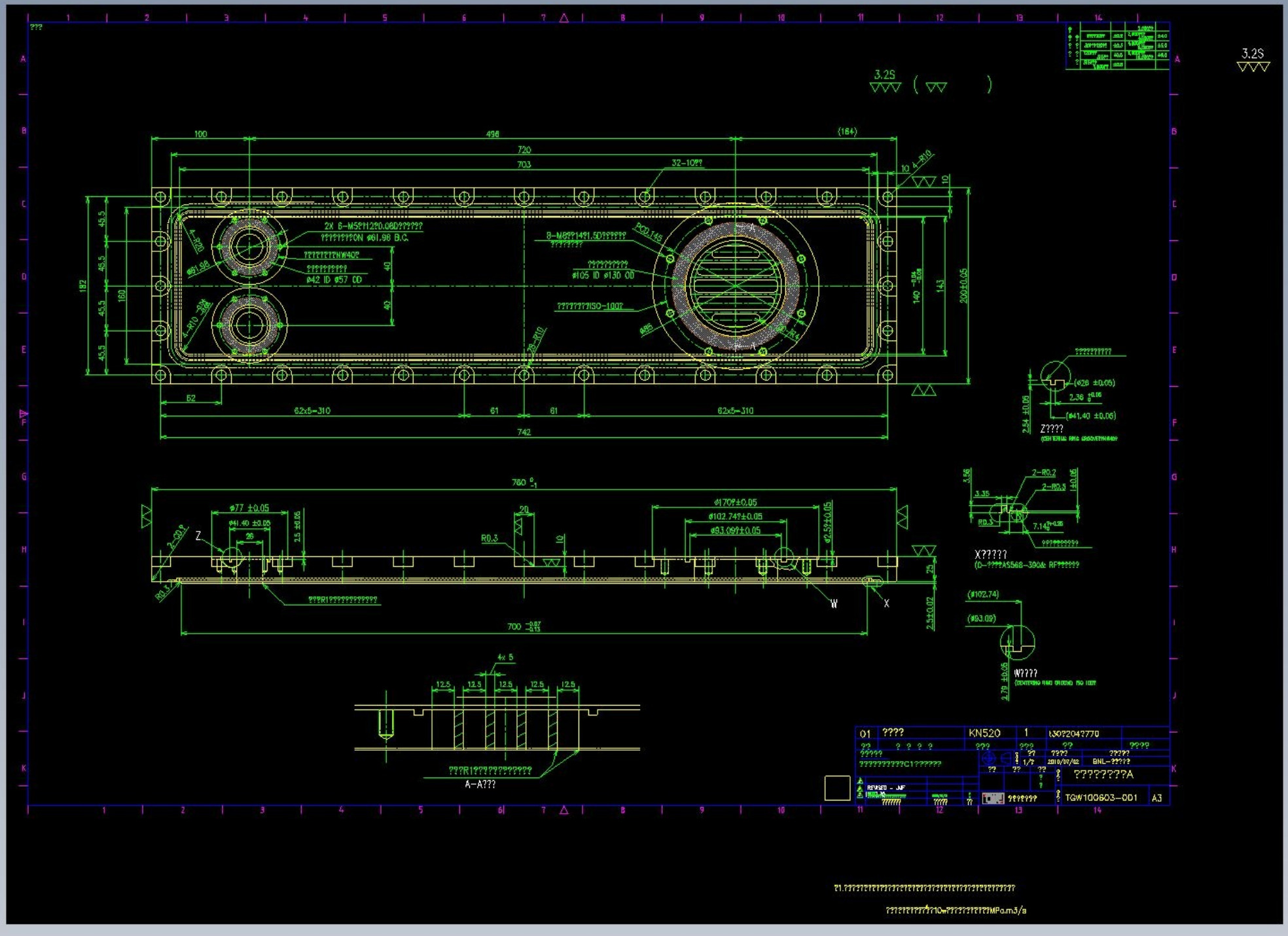
3.2S
100
498
(184)
720
703
32-10??
10
182
160
45.5
45.5
45.5
45.5
2X 8-M5??12?0.08D??????
????????ON ø61.98 B.C.
????????NW40?
????????
ø42 ID ø57 OD
40
40
ø61.98
R0.145
8-M8??1491.5D??????
????????
????????
ø105 ID ø130 OD
????????ISO-100?
ø85
140
143
200±0.05
62
62x5=310
61
61
62x5=310
742
760
ø77 ±0.05
ø41.40 ±0.05
26
2.5 ±0.05
R0.3
20
10
ø170?±0.05
ø102.74?±0.05
ø83.09?±0.05
ø2.54±0.05
25
2.5±0.02
700
???R1????????????
W
X
4x 5
12.5
12.5
12.5
12.5
12.5
???R1????????????
A-A???
???????????
(ø26 ±0.05)
2.36
(ø41.40 ±0.05)
2.54 ±0.05
Z????
2-R0.2
2-R0.5
3.35
R0.3
7.14
X?????
(D-????A5568-390Δ: RF??????)
(ø102.74)
(ø83.09)
2.79 ±0.05
W????
01 ???? KN520 1 t30?2043770
????? 2018/07/02 BNL-????
??????????C1??????
REVISED - JMF
???????A
TGW100603-0D1 A3
?1.??
????????????10?????????MPa.m3/s

MEBT Quad (preliminary)

Parameter	Units	Value
Quadrupole gradient	T/m	39.25; 31.11;16.85
Pole tip radius	mm	20
Quadrupole effective length	mm	45
Quadrupole integrated gradient	T	1.77; 1.4; 0.76
Dipole corrector integrated field	T-m	0.006
Copper conductor dimensions	mm	5.0 x 5.0, ø3.0
Copper area	mm^2	17.64
Quadrupole number of coil turns		4
Dipole number of turns		2
Quadrupole peak current at 1.77 T int. gradient	A	650
Dipole peak current at 0.006 T-m int. field	A	650
Current pulse form		60 Hz half sine wave
Repetition rate	Hz	15
R.M.S. current factor		0.0884
Quadrupole and dipole r.m.s. current	A	57.5
Current density	A/mm^2	3.25
Quadrupole and Dipole inductances	µH	83; 2.3
Quadrupole and Dipole DC resistances	Ω	0.7; 0.13
Quadrupole and Dipole Inductive voltages	V	20.3; 0.6
Quadrupole and Dipole power losses	kW	2.5; 0.5
Number of water circuits		2
Water pressure drop	atm	5.0

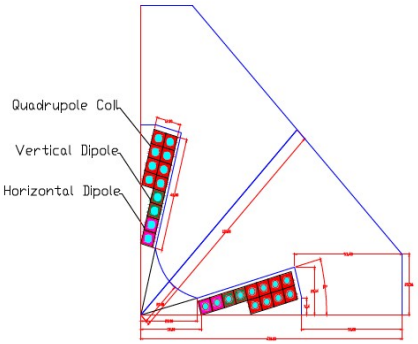

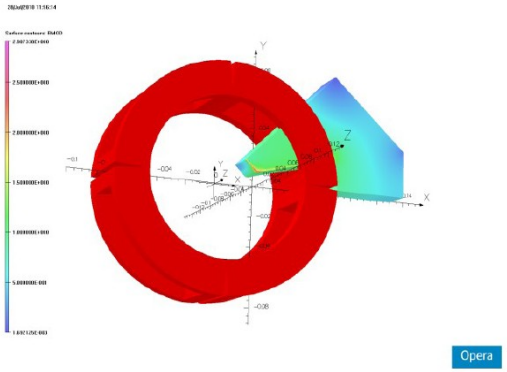

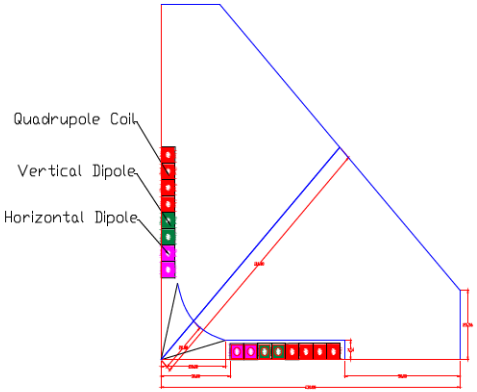

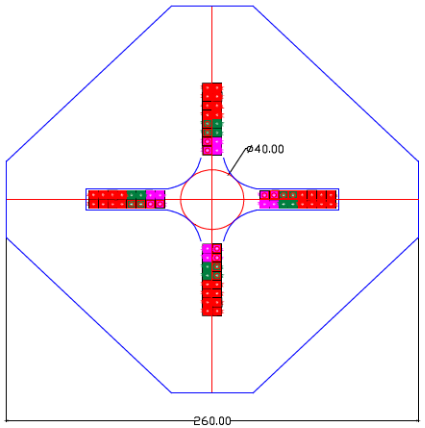

RFQ Status

- RFQ input power will be on the left w.r.t. the beam direction. Tuners will be on the other side. (16 June 2010)
- Coax cables need to be ordered for PA to RFQ.
- Simulation shows 80% capture at end of DTL1 with RFQ parameters.
- We should ask Schempp for progress report.

Trace3D Simulation

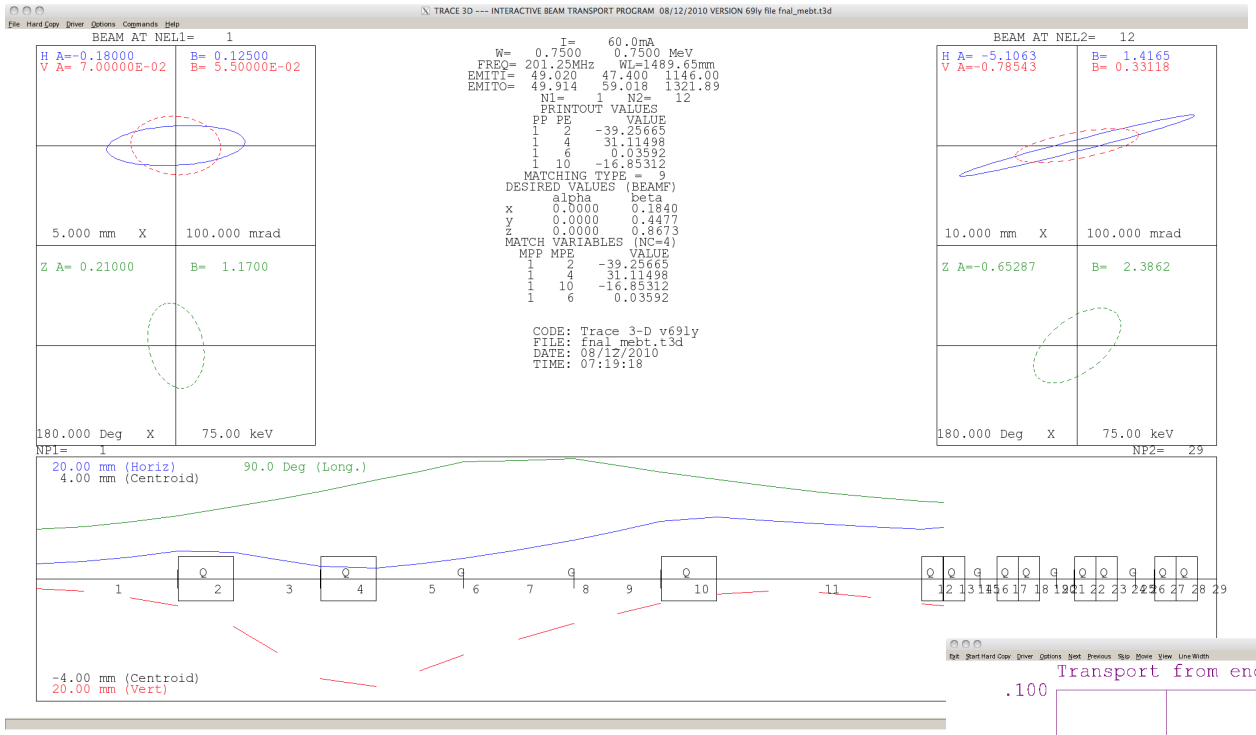

For the DTL model that we have, 80% capture requires this emittance at the entrance of the DTL.

Asssume 60mA beam output from RFQ.

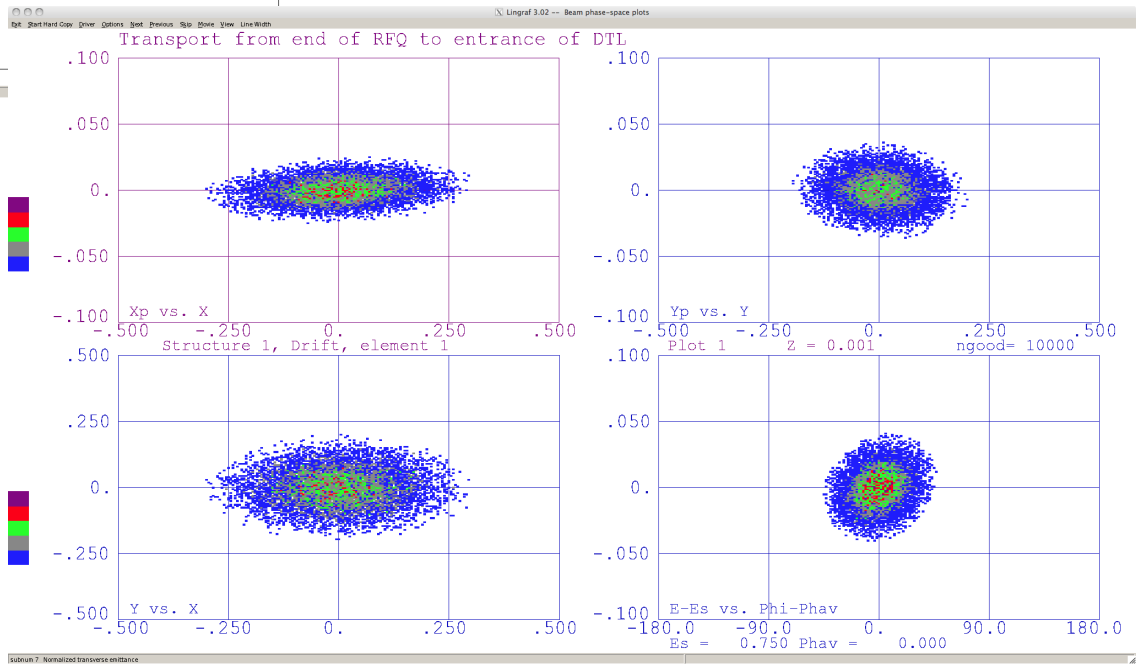

Trace3D/Parmila Simulation

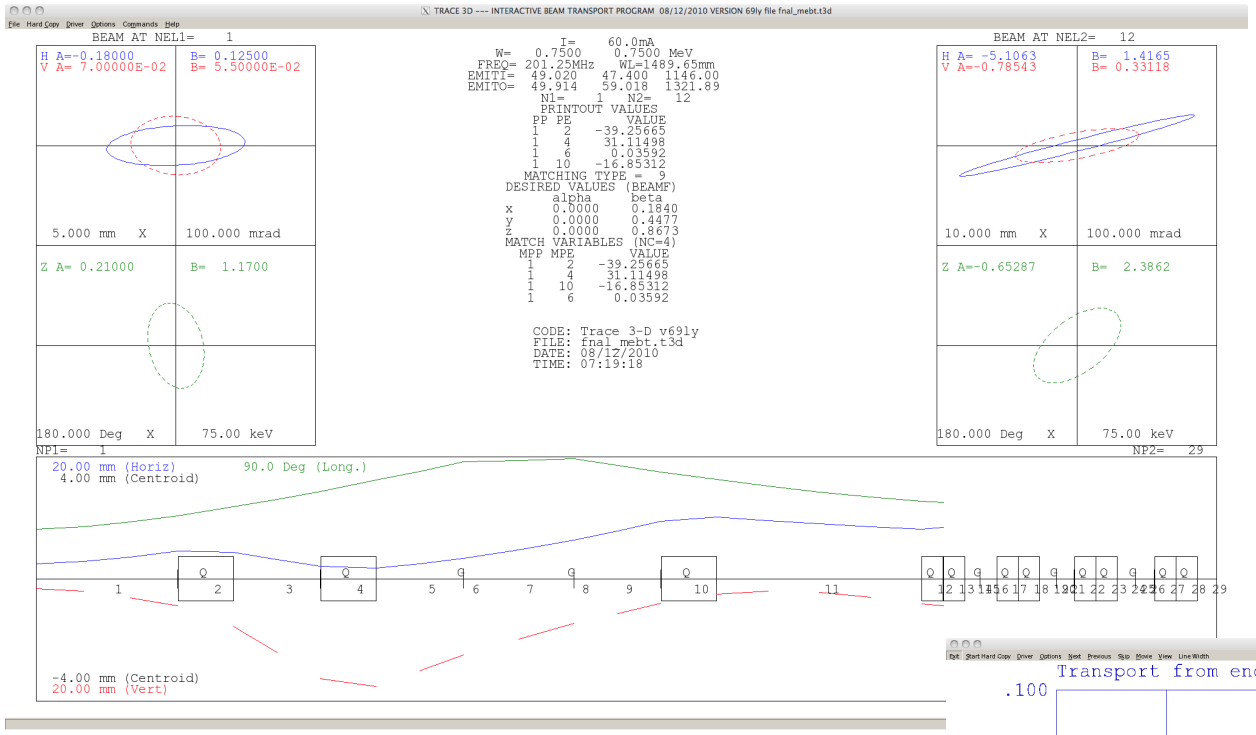

Interesting difference between Parmila and Trace3D at the end of the half quad.

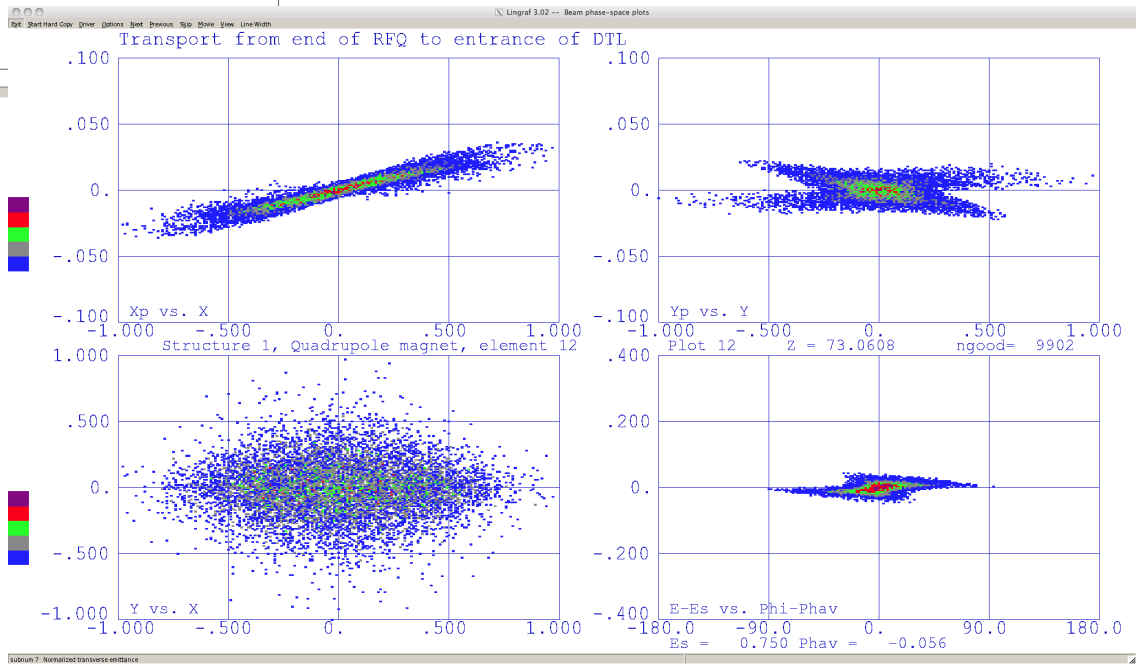

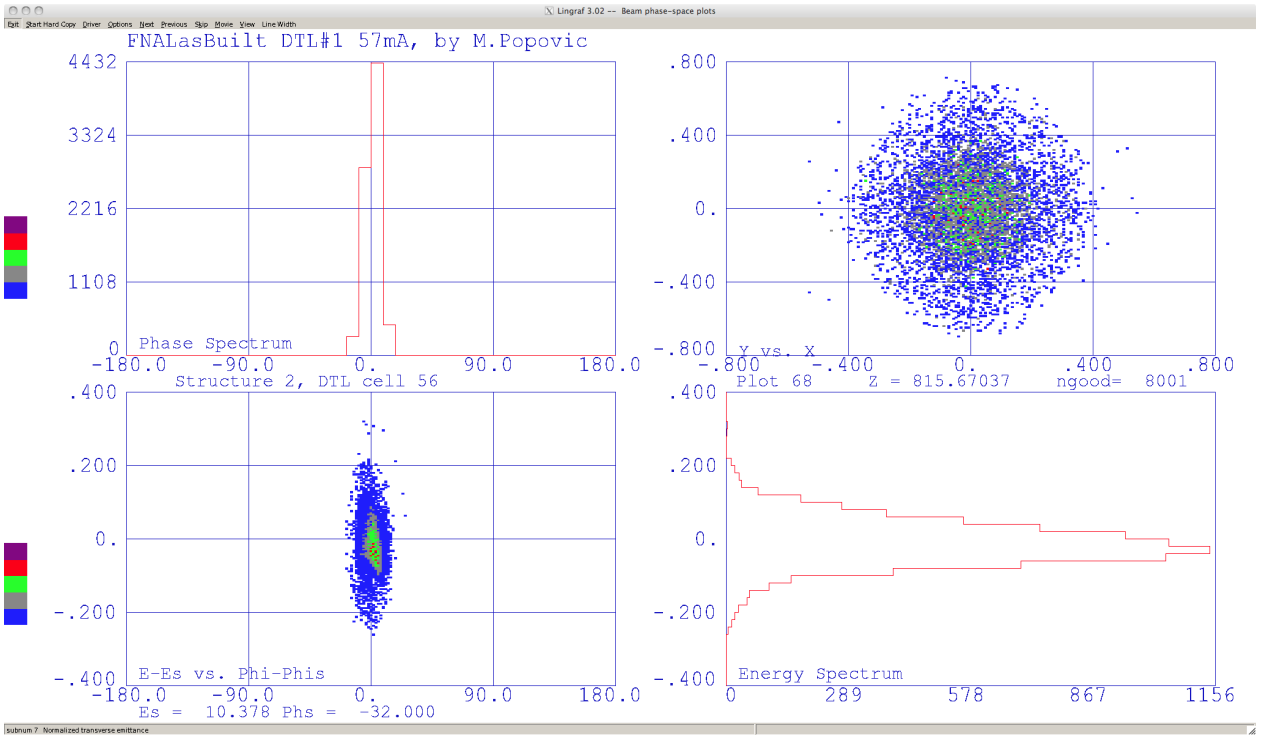

End of Tank 1, 80% capture.

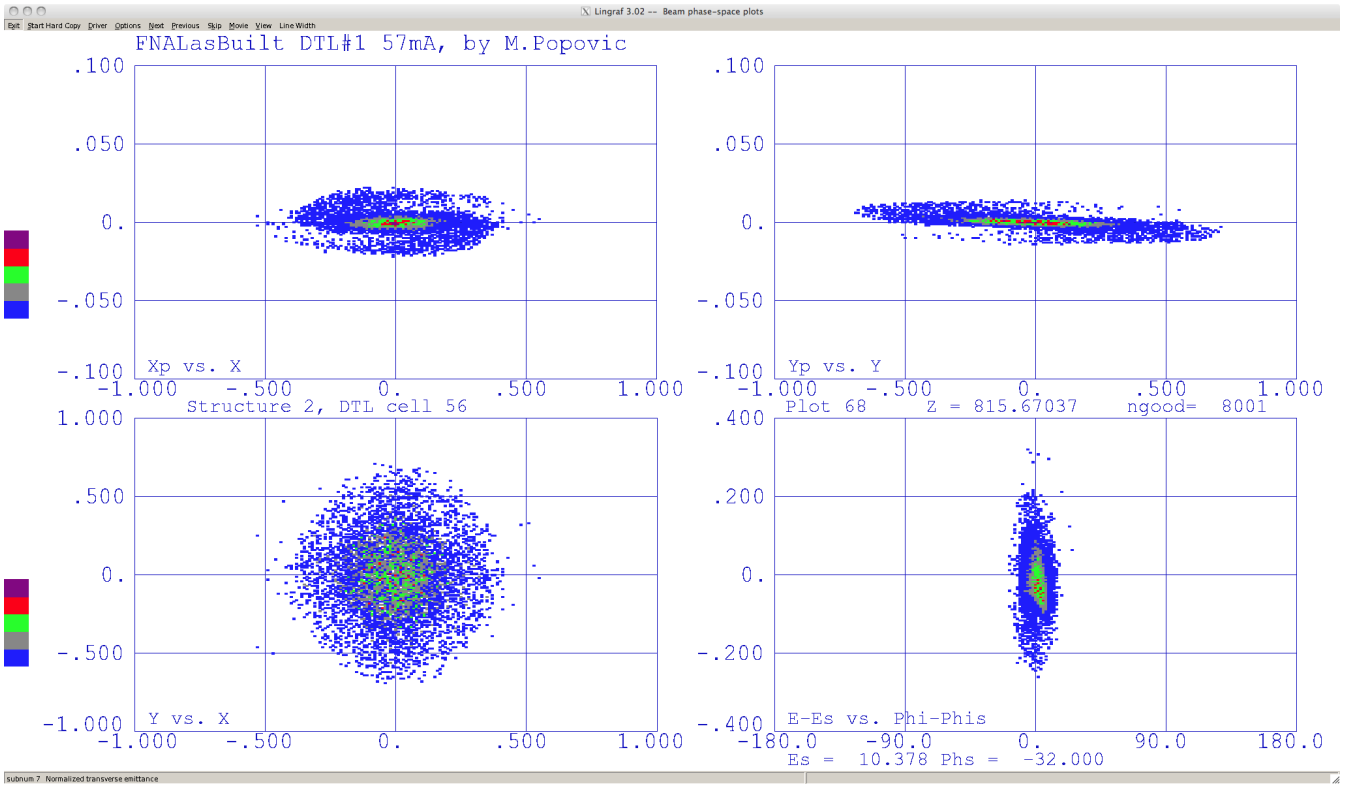

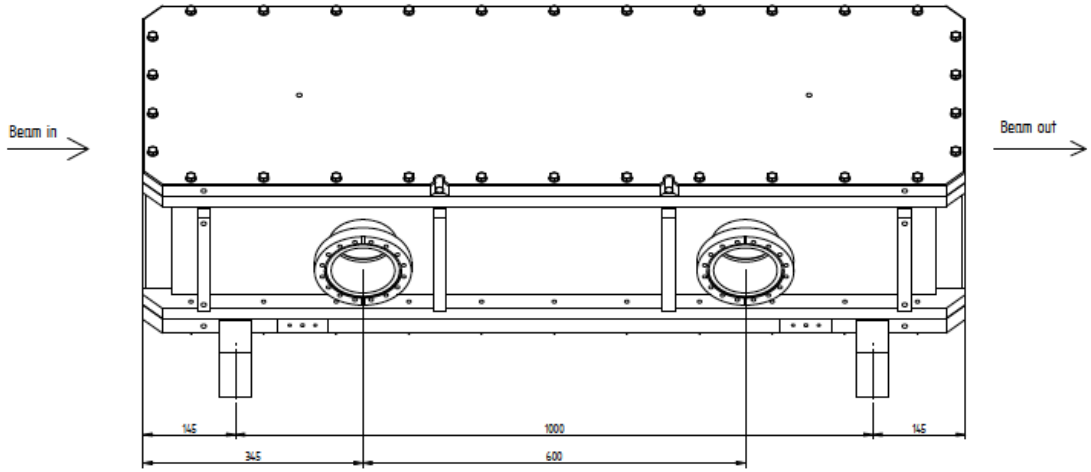

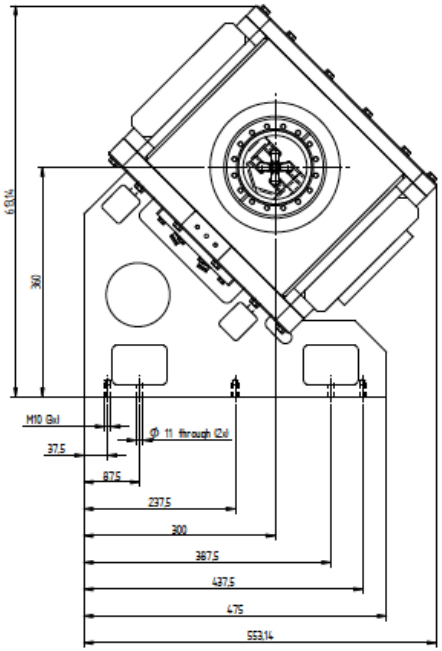

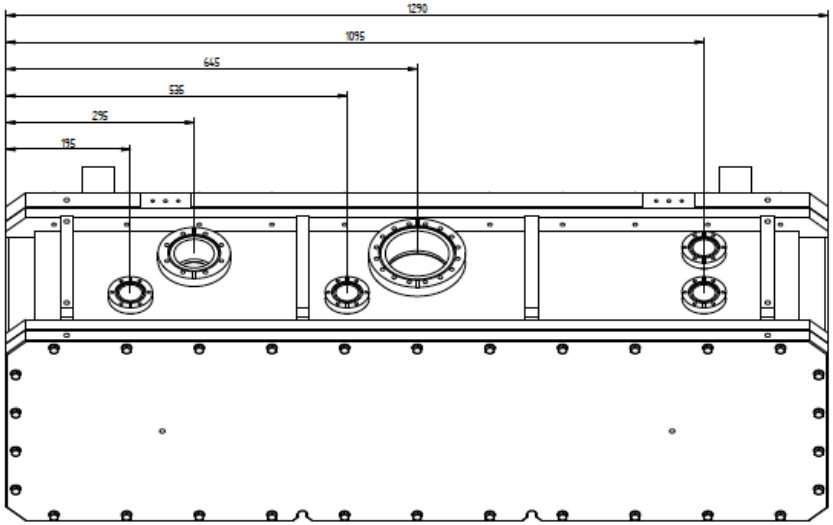

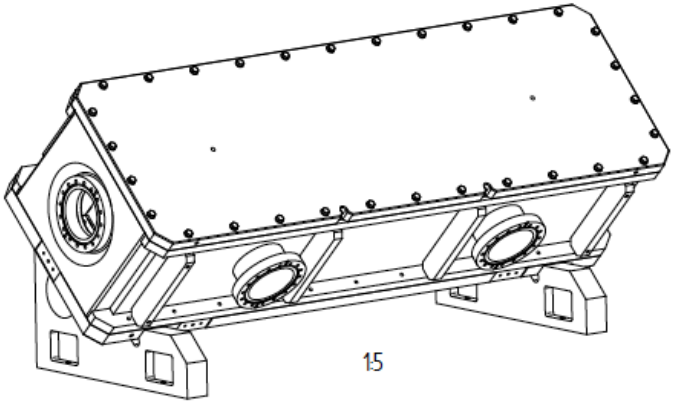

1:5

					525.066 kg
			14		Kreß GmbH
					Blattgröße: DIN A1
					Maßstab: 1
					10.044-00.00 A

Name/Typ: FermiLab

Benennung: FNAL-RFQ

Test Stand

- Room has been cleaned up.
  - After beam line layout (progress?)
    - Water – Bob Slazak
    - Electrical – Jim Ranson
- Need to test LEBT before RFQ connection
  - Wires, toroids at the end of the LEBT, same position as the RFQ.

Safety

- When can the beam line layout in test area be done?

Controls

- Mike Kucera will need to be involved.

RFQ reminders

- <u>Schempp is vendor</u>
  - Make sure that the vanes are cleaned! See ISIS email.
    - Some cleaning details supplied by ISIS.
  - Review and verify on site mechanical design and construction (already in contract).