Pre-injector Upgrade Updates (10 Nov – 01 Dec 2010)

C.Y. Tan
01 Dec 2010

Source Status

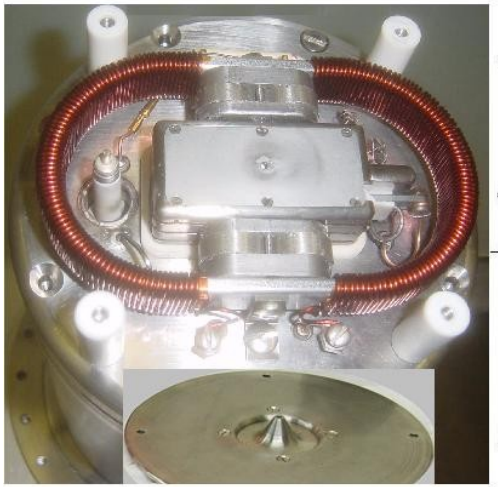

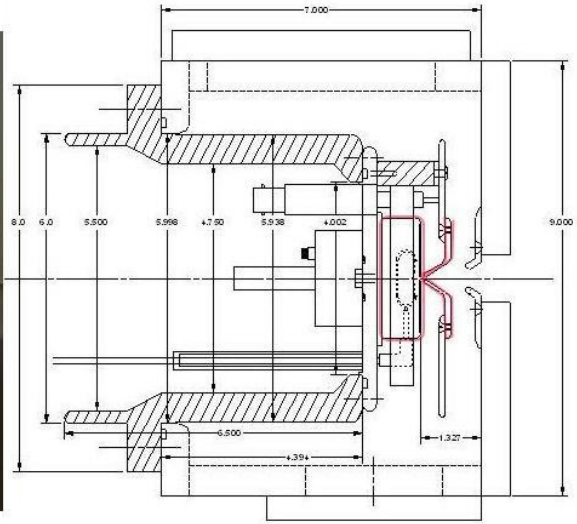

Device	Status	Comments
Source	Drawings being made	Cube is procured.
Einzel lens pulser	Works	First test of Einzel lens as chopper successful

Chopper Signals

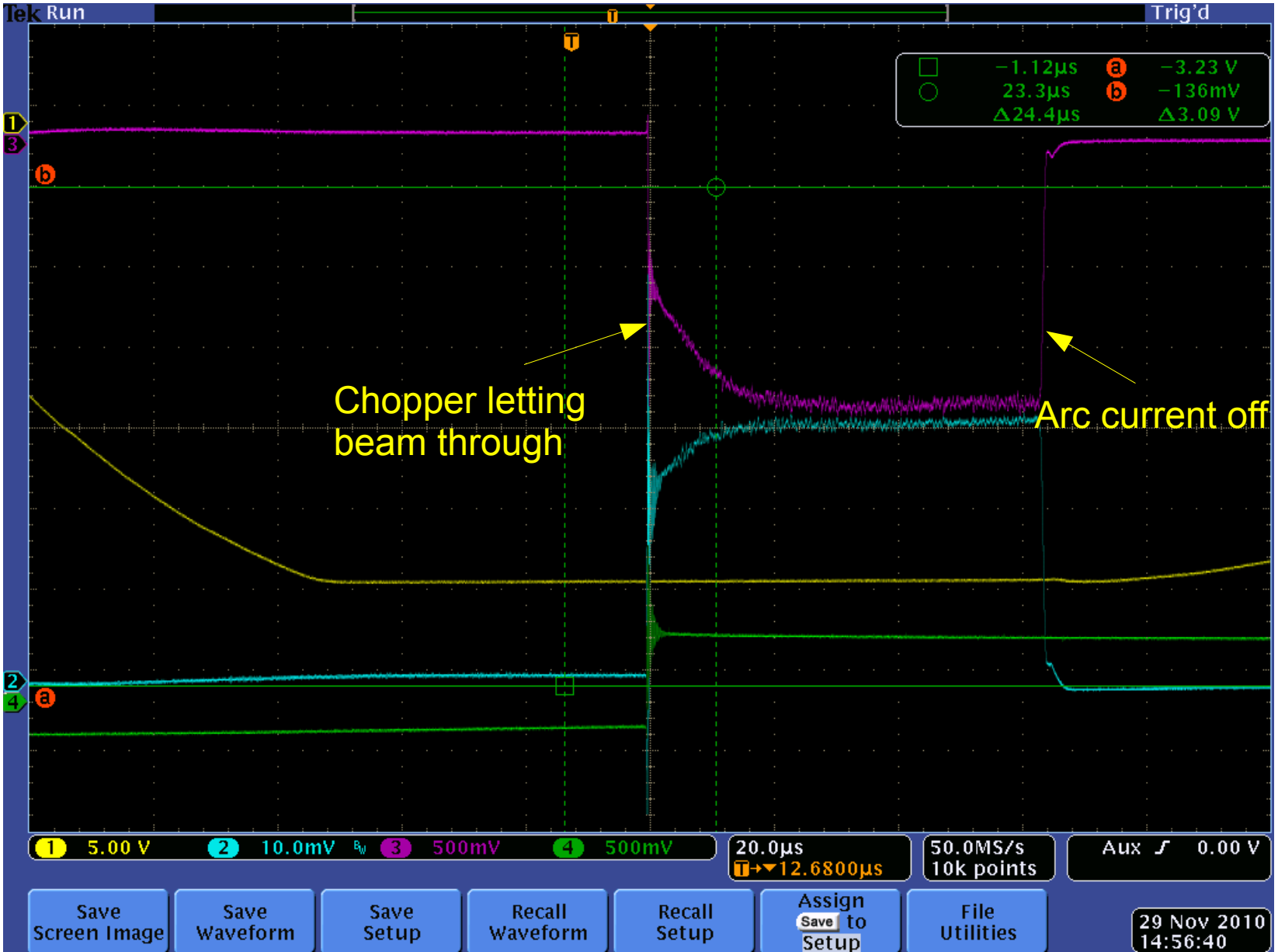

Magenta: Faraday cup

Cyan: toroid

Yellow: Extractor voltage

Green: chopper pulser

16 averages

Scraping from space charge blow up

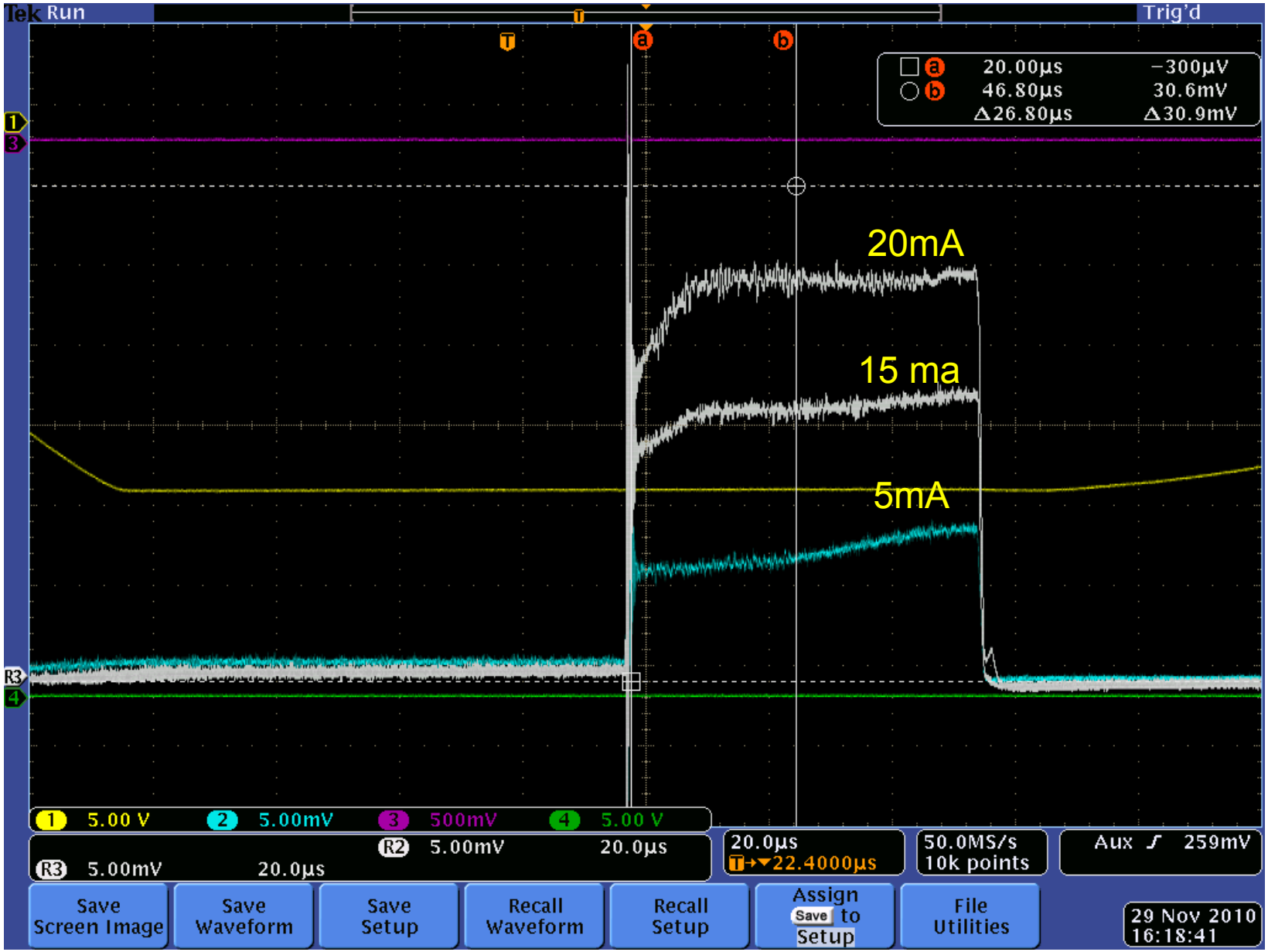

LEBT Status

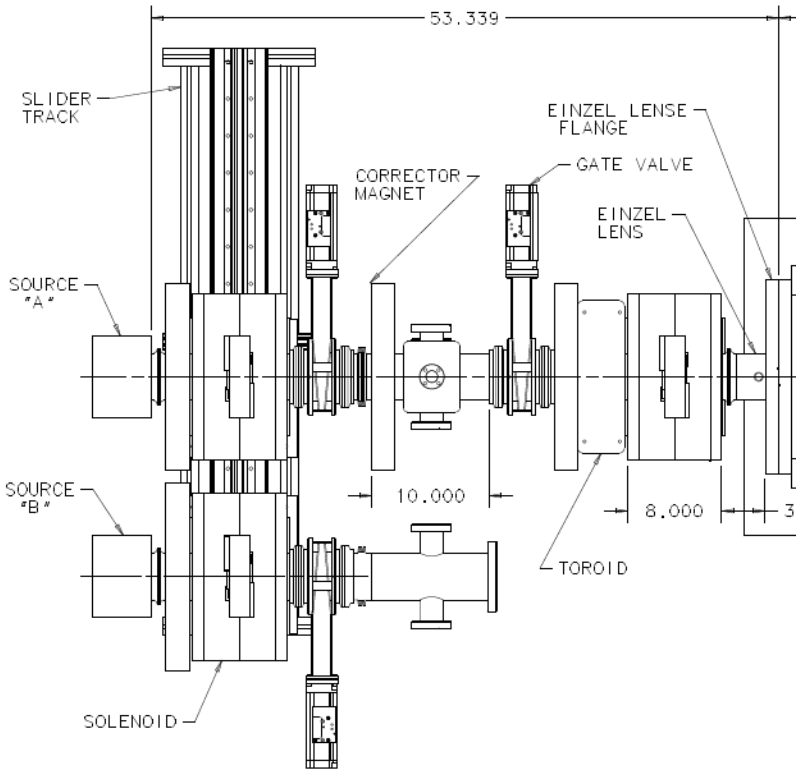

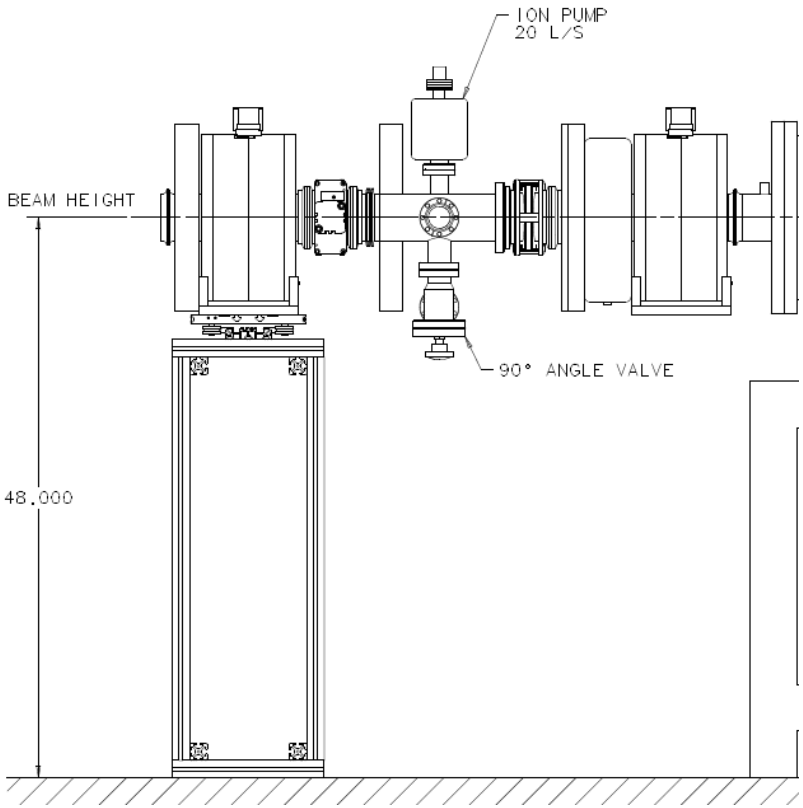

Status	Comments
Bdl=186.5 gauss inches	2 bids
Solenoids	Winding to start this week
Toroids	Bill is still deciding
Einzel lens crowbar circuit	Must be done before HINS gets their source back

MEBT Status

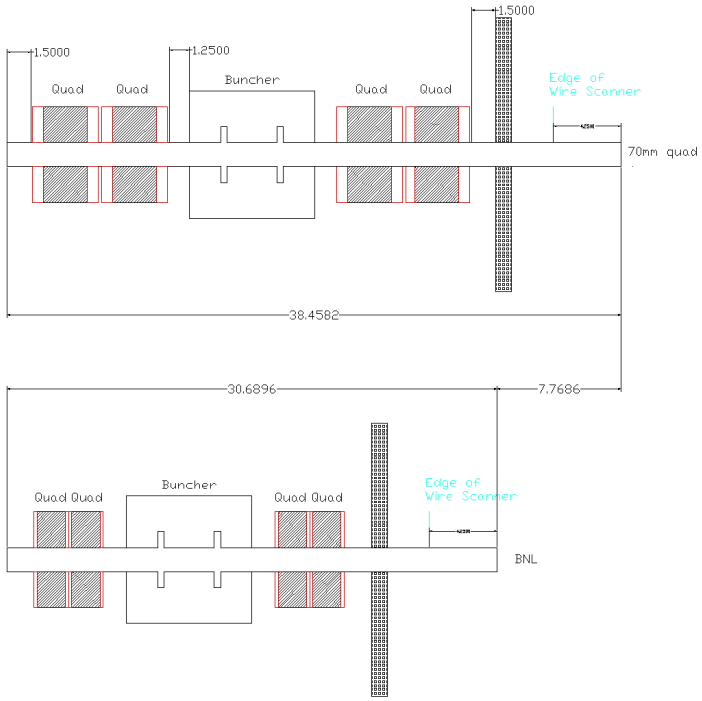

FNAL style

BNL style

Device	Status	Comments
Quads	New design with FNAL quads and BNL quads as doublets.	Capture efficiency within 5% between FNAL and BNL design.
Buncher	Kevin approved drawings. In building process.	Indent where flange is to reduce length by 1.5cm
Power for quads	Specs to follow	Quads being redone.
Power for buncher		Use present buncher supply in the line.
Connection to Tank	Remove large flange of Tank1	

MEBT Quads (BNL)

- Spoke to Masahiro on 15 Nov
  - 45mm will be tested before end of the year.
  - Similar 70mm quads installed in EBIS
    - All hollow conductors
    - 5Hz, 100-200us pulse, 70T/m (~800A)
    - Temperature rise is minimal for flow rate of 1 litre/s.

RFQ Status

- Schempp
  - Tan has reproduced Schempps Twiss params and emittances!
- PA assembly
  - Waiting for new engineer, coming on 01/01/11

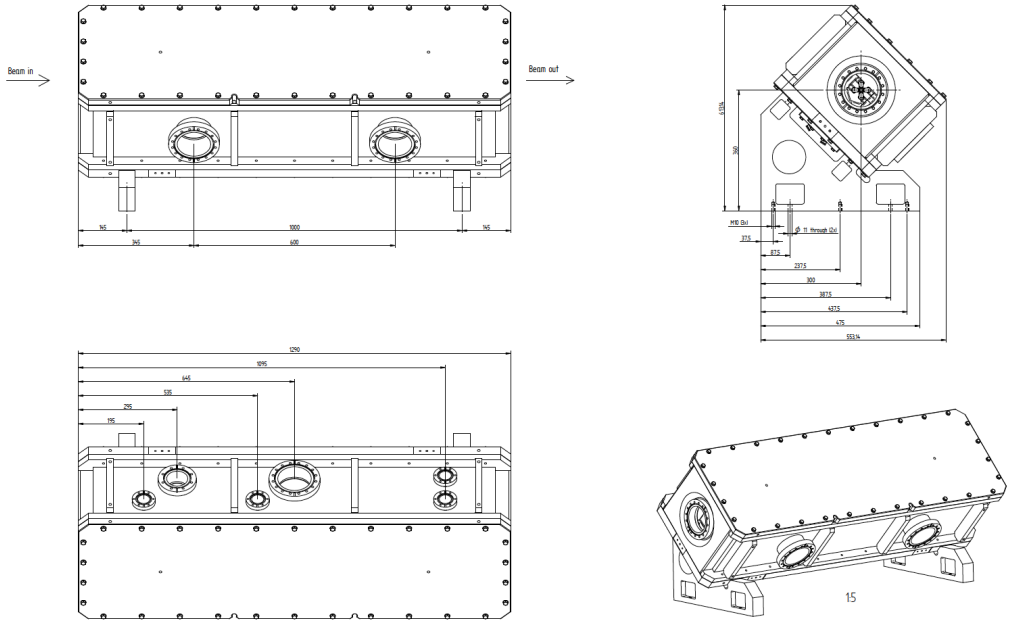

Test Stand

- Room has been cleaned up.
  - Beam line layout in progress
    - Water – Bob Slazak
    - Electrical – Jim Ranson
- Need to test LEBT before RFQ connection
  - Wires, toroids at the end of the LEBT, same position as the RFQ.
- Design diagnostic line.
- Drawings from Schempp are sufficient to build table.

Test Area

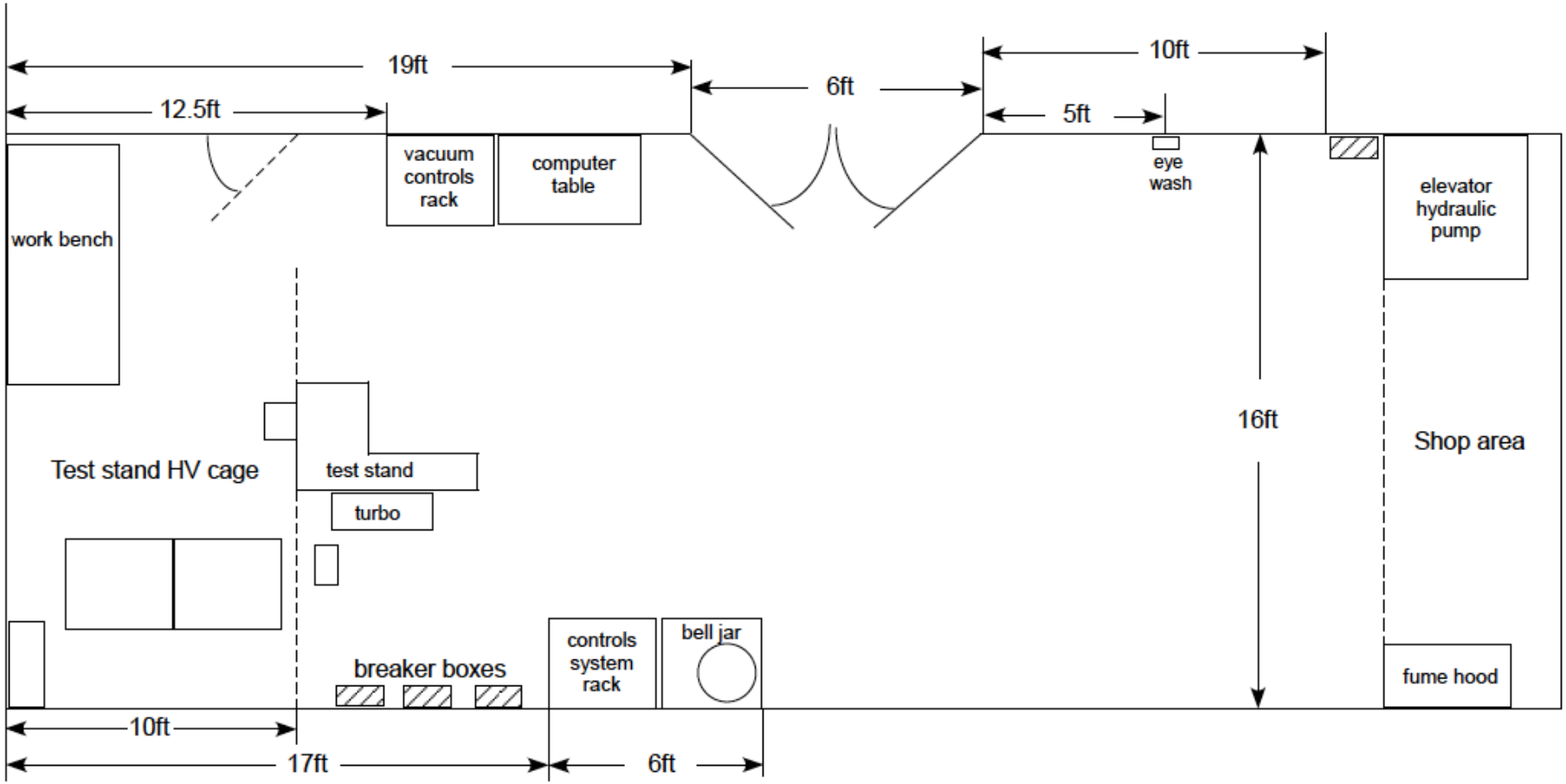
19ft
12.5ft
6ft
10ft
5ft
vacuum controls rack
computer table
eye wash
work bench
elevator hydraulic pump
16ft
Shop area
Test stand HV cage
test stand
turbo
breaker boxes
controls system rack
bell jar
fume hood
10ft
17ft
6ft

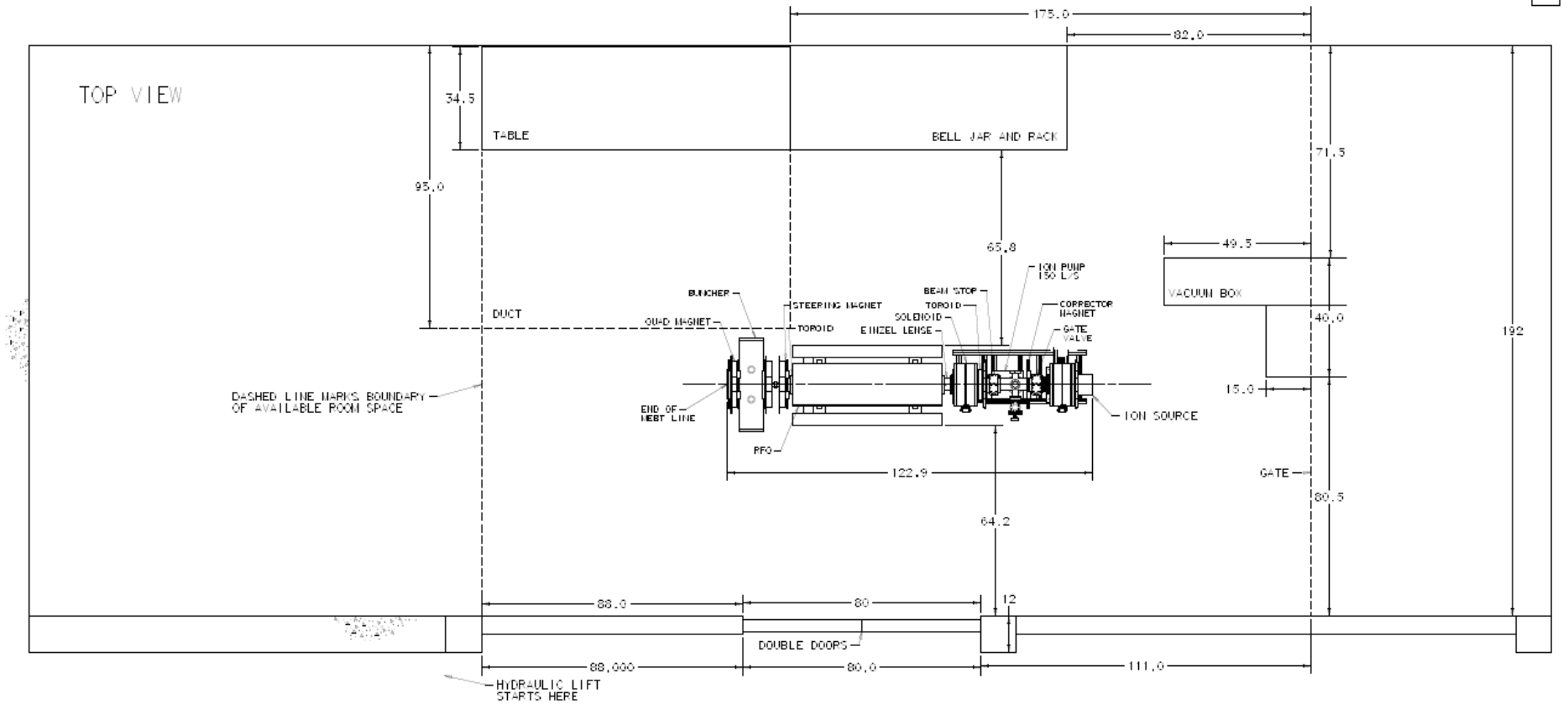
TOP VIEW
175.0
82.0
34.5
TABLE
BELL JAR AND RACK
71.5
95.0
65.8
49.5
ION PUMP
150 L/S
VACUUM BOX
BUNCHER
STEERING MAGNET
BEAM STOP
TOROID
CORRECTOR
MAGNET
DUCT
QUAD MAGNET
TOROID
SOLENOID
EINZEL LENSE
GATE
VALVE
40.0
192
DASHED LINE MARKS BOUNDARY
OF AVAILABLE ROOM SPACE
END OF
MEBT LINE
15.0
ION SOURCE
PFO
122.9
GATE
80.5
64.2
88.0
80
12
DOUBLE DOORS
88.000
80.0
111.0
HYDRAULIC LIFT
STARTS HERE

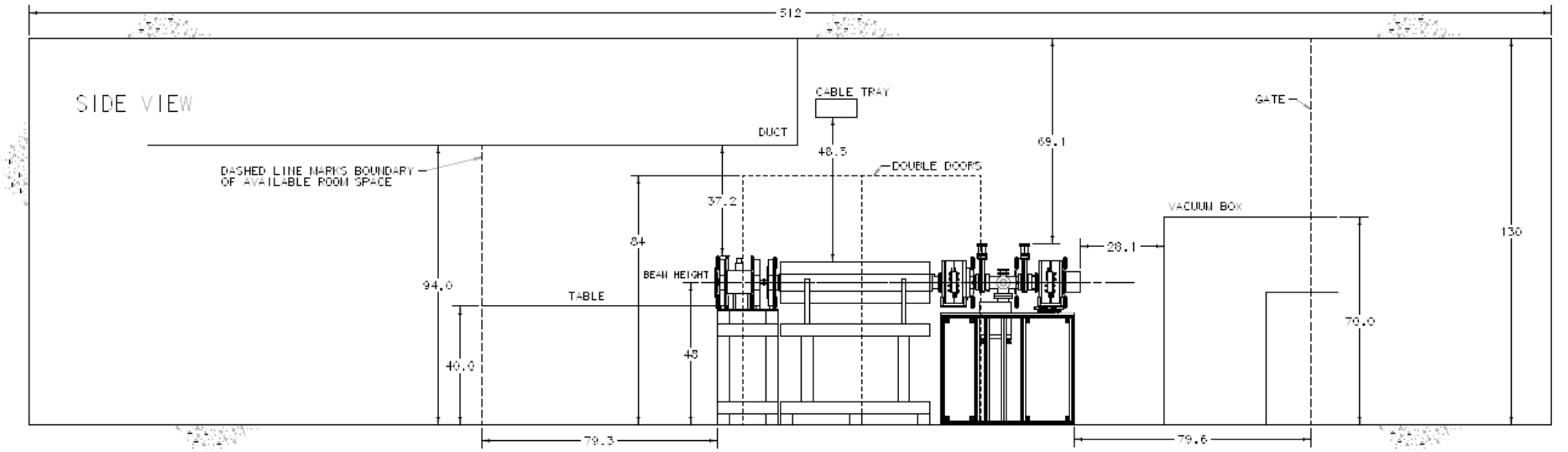
512
SIDE VIEW
CABLE TRAY
GATE
DUCT
48.5
69.1
DASHED LINE MARKS BOUNDARY
OF AVAILABLE ROOM SPACE
DOUBLE DOORS
37.2
VACUUM BOX
84
28.1
130
BEAM HEIGHT
94.0
TABLE
70.0
48
40.0
79.3
79.6

Instrumentation

- Toroids clamp on
  - 1.5” over 3” flange toroids (7810)
    - sensitivity 0.1V/A cf. 1V/A
    - Rise time 50ns (same as non clamp on, 2x slower than present)
    - Length 1.25”
  - 6” toroids (7655)
    - 0.1V/A
    - Rise time 100 ns.
    - Length 1.5” (2.5x or 3x shorter than non clamp on)

Waiting for Bill!!!!!

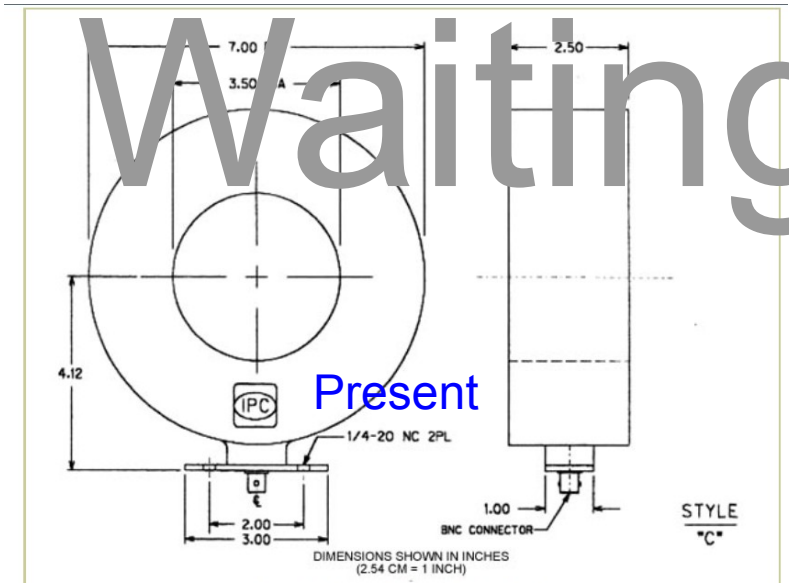

Engineering Drawing - Current Monitor - Style C

AC Applications

Model Number	Output Sensitivity **Volts/Amp**	Hole Dia. **inch**	Max. Peak Current **kA**	Max. RMS Current **A**	Low Frequency 3 dB Point **Hz**	High Frequency 3 dB Point **MHz**	Saturation Peak A/Hz **As**
CM-100-C	1	3.5	0.5	30	30	20	0.08

Model Number	Output Sensitivity **Volts/ Amp**	Hole Diameter **inch**	Max. Peak Current **kA**	Droop **%/ms**	Usable Risetime **Nano-seconds**	Saturation No Bias **∫idt As**	Saturation With Bias **∫idt As**
CM-100-C	1	3.5	0.5	20	17.5	0.008	0.025

Safety

- When can the beam line layout in test area be done?

RFQ reminders

- <u>Schempp is vendor</u>
  - Make sure that the vanes are cleaned! See ISIS email.
    - Some cleaning details supplied by ISIS.
  - Review and verify on site mechanical design and construction (already in contract).

Controls

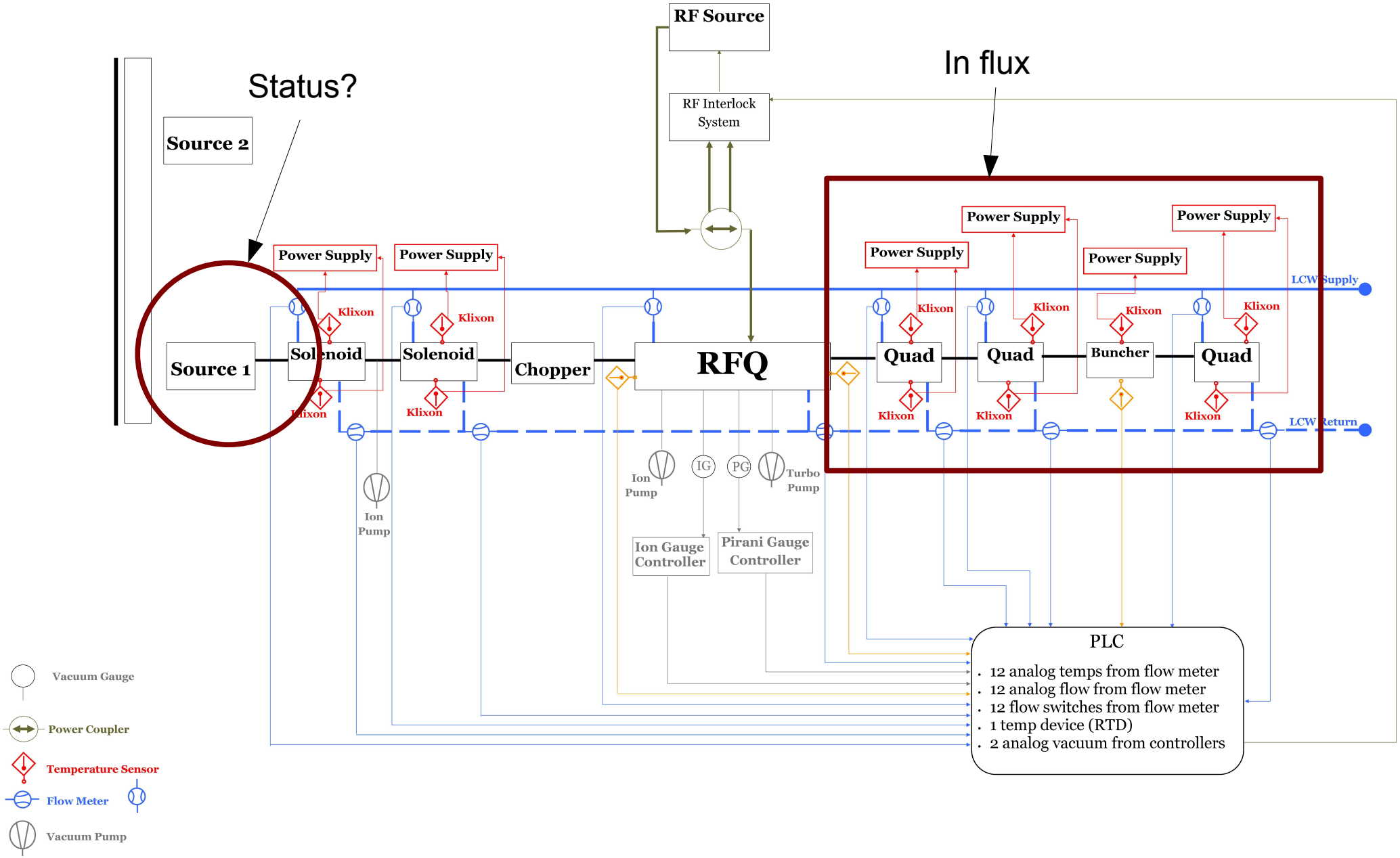
RF Source
RF Interlock System
Status?
In flux
Source 2
Source 1
Solenoid
Solenoid
Chopper
RFQ
Quad
Quad
Buncher
Quad
Power Supply
Power Supply
Power Supply
Power Supply
Power Supply
Klixon
LCW Supply
LCW Return
Ion Pump
Ion Pump
Turbo Pump
IG
PG
Ion Gauge Controller
Pirani Gauge Controller
PLC
. 12 analog temps from flow meter
. 12 analog flow from flow meter
. 12 flow switches from flow meter
. 1 temp device (RTD)
. 2 analog vacuum from controllers
Vacuum Gauge
Power Coupler
Temperature Sensor
Flow Meter
Vacuum Pump