CHANNEL 1
Right angle PCB BNC bnc2
AMP 227161-7
J1
GNDA
CHANNEL 2
Right angle PCB BNC bnc2
AMP 227161-7
J2
GNDA
Chan_1
Chan_2
2-Channel Ping-Ponged
Switched Integrators
RCN4
RCN5
RCN1
RCN6
47ohms
47pF
Isolated RC Network
Pan EZAST22AAAJ
DACTEST
2CH_INTEG
CHANNEL 3
Right angle PCB BNC bnc2
AMP 227161-7
J3
Chan_3
GNDA
CHANNEL 4
Right angle PCB BNC bnc2
AMP 227161-7
J4
Chan_4
GNDA
RCN8
RCN2
RCN7
RCN3
2-Channel Ping-Ponged
Switched Integrators
Isolated RC Network
Pan EZAST22AAAJ
DACTEST
GNDA
2CH_INTEG
Dual 2-Channel Simultaneous Sampling
SAR 500 kSPS 16-Bit ADC
AD7654
Dual 2-Channel Simultaneous Sampling
SAR 500 kSPS 16-Bit ADC
AD7654
+3.3V
Octal Buffer/Drivers w/3-State
U50
SN74LVTH541DW
GND
Integrator Control / VME FPGA
IntgFPGA
Logic_CLK
DAC7731-1CH
DACTEST
+3.3V
C50
BP79
BP89
BP50
10uF
0.1uF
10uf C1210 20% 25vdc
GND
VME Interface on J1
VME
256K x 16 Static Ram
U54
CY7C1041CV33-15ZC
+3.3V
GND
J71
3m2520-6002UB
GND
MODFIED 3/21/2006 9:18:46 AM
Page 1 of 14
EED Department
ORIGINATOR Craig Drennan DATE 3/25/04
DRAWN Craig Drennan DATE 10/17/04
CHECKED checked DATE date
APPROVED approved DATE date
Fermi National Accelerator Laboratory
United States Department of Energy
Z:\JOBS\Integ Module\Integ03_Rev2_3_21_06\Integ03_Rev2\Integ03_Rev2.prj
SIZE D
DRAWING NUMBER 0000-ED-173553-1
Schematic Page 01 of 02
REV
H=8NO; V=4LA

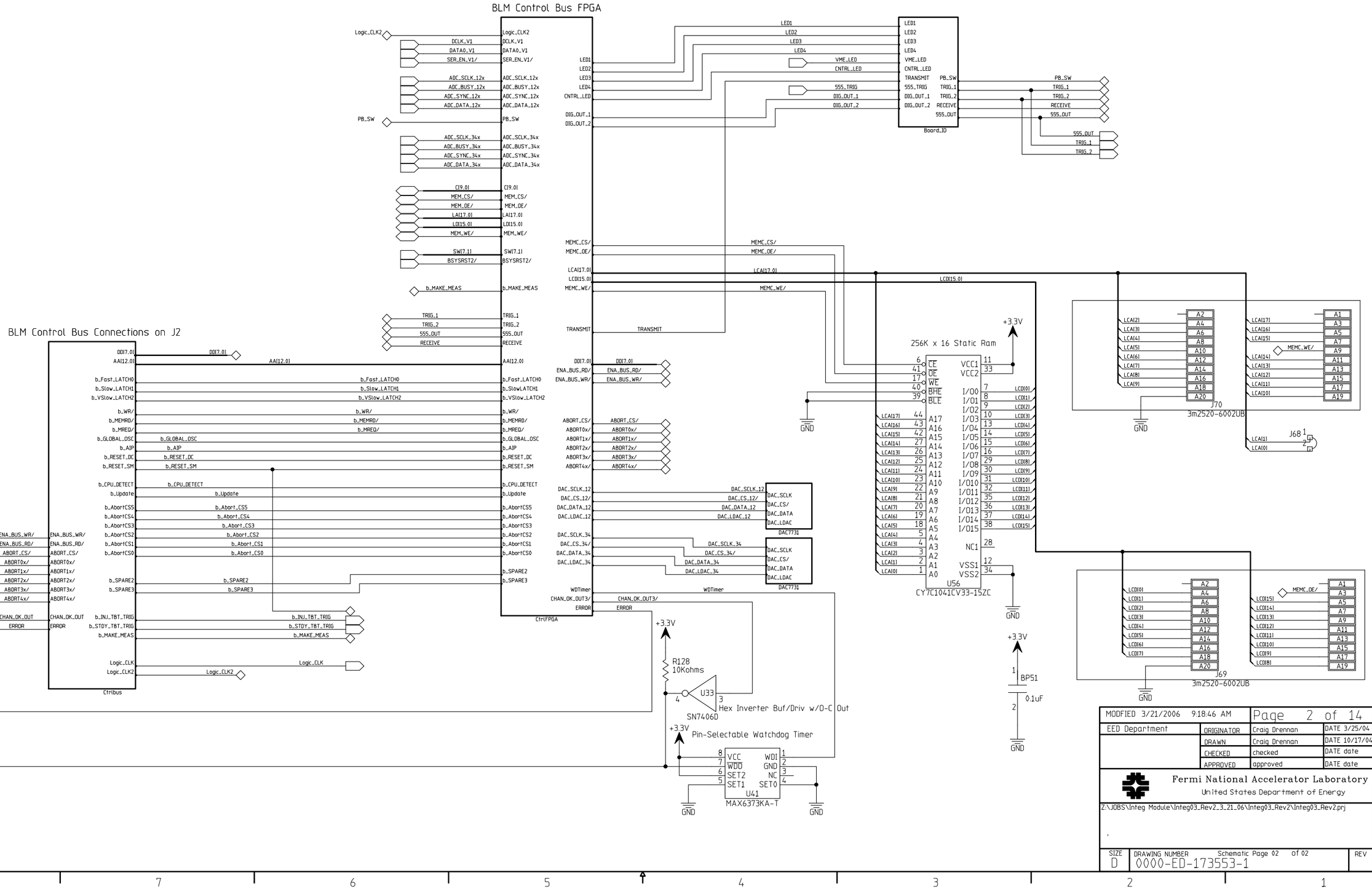
BLM Control Bus FPGA
BLM Control Bus Connections on J2
CtrlFPGA
Ctribus
Board_ID
256K x 16 Static Ram
CY7C1041CV33-15ZC
U56
DAC7731
SN7406D
U33
Hex Inverter Buf/Driv w/O-C Out
Pin-Selectable Watchdog Timer
MAX6373KA-T
U41
R128
10Kohms
BP51
0.1uF
+3.3V
GND
J70
J69
J68
3m2520-6002UB
MODIFIED 3/21/2006 9:18:46 AM
Page 2 of 14
EED Department
ORIGINATOR Craig Drennan DATE 3/25/04
DRAWN Craig Drennan DATE 10/17/04
CHECKED checked DATE date
APPROVED approved DATE date
Fermi National Accelerator Laboratory
United States Department of Energy
Z:\JOBS\Integ Module\Integ03_Rev2_3_21_06\Integ03_Rev2\Integ03_Rev2.prj
SIZE D
DRAWING NUMBER 0000-ED-173553-1
Schematic Page 02 of 02
REV

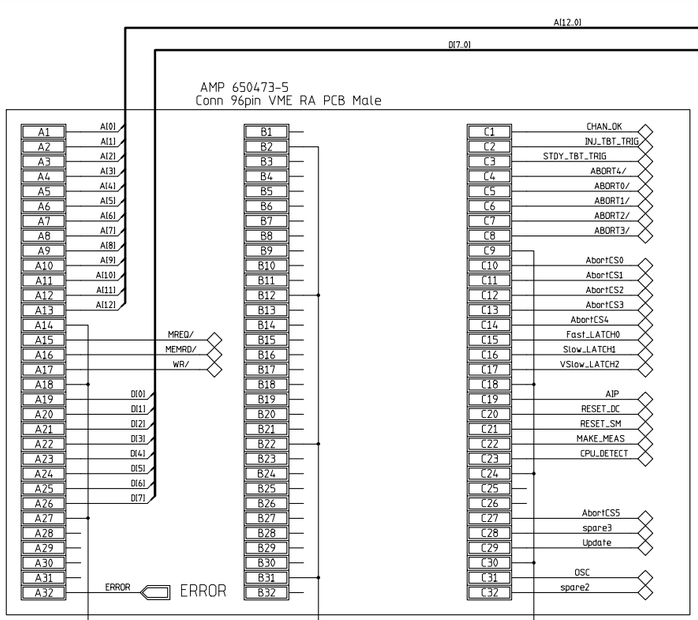

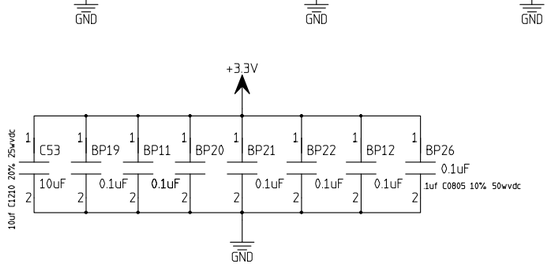

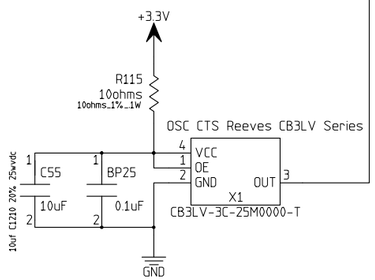

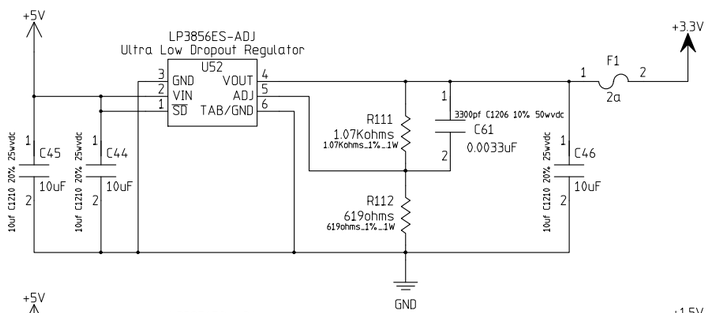

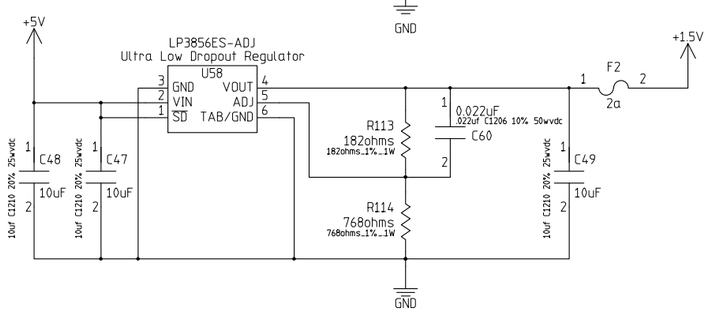

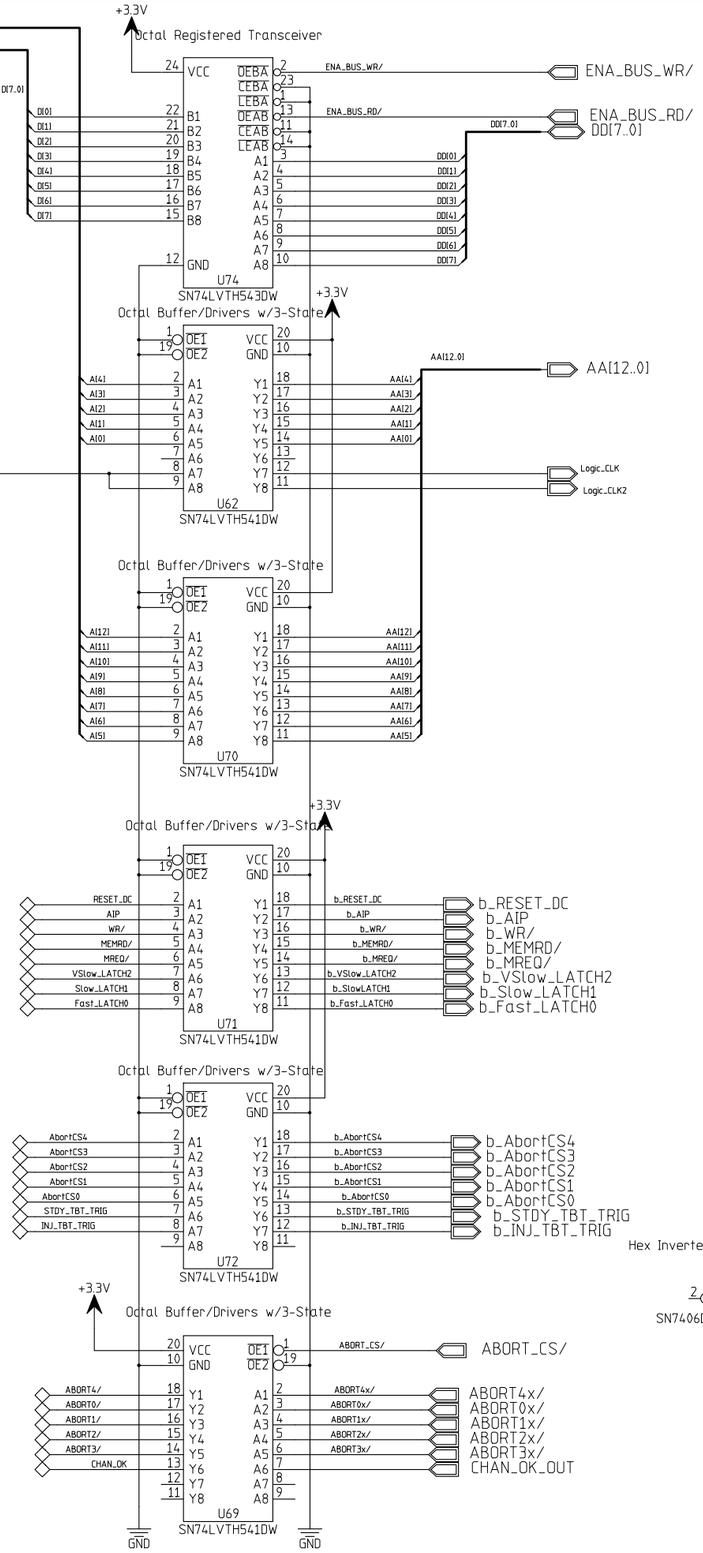

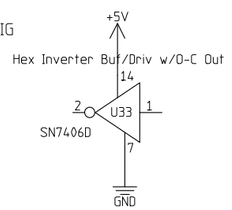

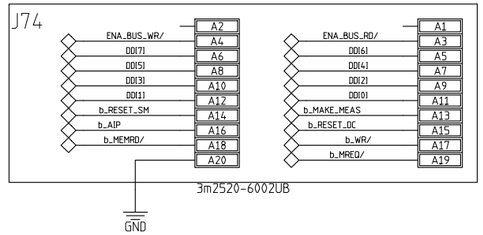

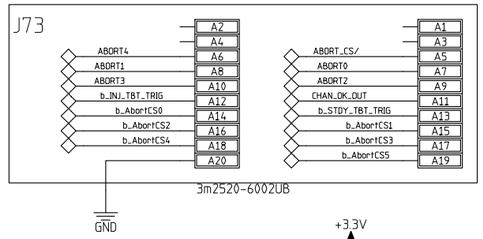

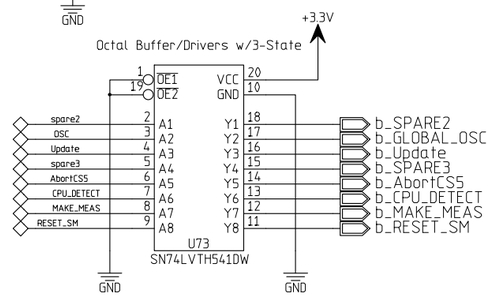

MODIFIED 1/6/2006 4:50:22 PM		Page 3 of 14	
EED Department	ORIGINATOR	Craig Drennan	DATE 3/25/04
	DRAWN	Craig Drennan	DATE 10/17/04
	CHECKED	checked	DATE date
	APPROVED	approved	DATE date

Fermi National Accelerator Laboratory
United States Department of Energy

Z:\JOBS\Integ Module\Integ03_Rev2_3_21_06\Integ03_Rev2\Integ03_Rev2.prj

.

SIZE	DRAWING NUMBER	Schematic Page 01 of 01	REV
D	0000-ED-173553-1		

H:BND; V:4LA

Altera Cyclone EP1C6 Device
EP1C6Q240C8

U55

Fair-Rite 2512066007Y0
Z=60ohms, DCR=0.2ohms, L1206

U59
TMP03FS

U43
AT17LV002A-10JC
ATMEL FPGA EEPROM

J40
3m2510-6002UB

MODIFIED 1/6/2006 4:51:44 PM		Page 4 of 14	
EED Department	ORIGINATOR	Craig Drennan	DATE 3/25/04
	DRAWN	Craig Drennan	DATE 10/17/04
	CHECKED	checked	DATE date
	APPROVED	approved	DATE date

Fermi National Accelerator Laboratory
United States Department of Energy

Z:\JOBS\Integ Module\Integ03_Rev2_3_21_06\Integ03_Rev2\Integ03_Rev2.prj

SIZE	DRAWING NUMBER	Schematic Page 01 of 01	REV
D	0000-ED-173553-1		

H:BND, V:4LA

JUMPER BERG 3PINx2.54mm

TRANSMIT

J56

RECEIVE

GND

555_TRIG

J63

R119
10Kohms

10.0Kohms_1%_1W

J50

General Purpose Timer

+5V

RESET
TRIG
THRES
CONT
DISCH
VCC
OUT
GND
U49
ICM7555ISA

R109
100ohms
100ohms Top Adj 25 turns 10%

R110
2.55Kohms
2.55Kohms_1%_1W

BP5
0.01uF

BP6
0.01uF
.01uf C1206 10% 50wvdc

+3.3V

R89
10Kohms

U33
SN7406D
Hex Inverter Buf/Driv w/O-C Out

555_OUT

SPST Push Button Right Angle
ALCO TPA11CGRA0

SW1

R145
10Kohms

PB_SW

Hex Inverter Buf/Driv w/O-C Out

LED1
LED2
LED3
LED4
VME_LED
CNTRL_LED

U47
SN7406D

D1
Red
DIALIGHT 553-0111

D2
Red
DIALIGHT 553-0111

D3
Green
DIALIGHT 553-0111

D3
Green
DIALIGHT 553-0122

RN1
220ohms
220 ohms X 8, sop16

INTEGRATION ACTIVE [I]

LOGIC RESET [R]

ERROR [E]

ABORT IN PROG [A]

VMEBUS ACTIVE [V]

CNTRLBUS ACTIVE [C]

DIALIGHT 553-0122 Bourns 4816P-T01-221

DIG_OUT_1

DIG_OUT_2

U48
N74F3037D
Quad 2-Input NAND Gate

J33

J32

TYCO D-607-10
PCB Terminator

LEMO EPL.00.250.NTN
LEMO_5pin_RA

J5

J6

J11

J12

R147
10Kohms

R146
10Kohms
10.0Kohms_1%_1W

R6
51.1ohms

R5
51.1ohms
51.1ohms_1%_1W

R90
10Kohms

R91
10Kohms

TRIG_1

TRIG_2

BP97
BP118
BP98
0.1uF

C43
10uF
10uf C1210 20% 25wvdc

BP80
BP108
BP107
BP83
0.1uF
1uf C0805 10% 50wvdc

MODFIED 1/6/2006 5:22:34 PM		Page 5 of 14	
EED Department	ORIGINATOR	Craig Drennan	DATE 3/25/04
	DRAWN	Craig Drennan	DATE 10/17/04
	CHECKED	checked	DATE date
	APPROVED	approved	DATE date

Fermi National Accelerator Laboratory
United States Department of Energy

Z:\JOBS\Integ Module\Integ03_Rev2_3_21_06\Integ03_Rev2\Integ03_Rev2.prj

SIZE	DRAWING NUMBER	REV
C	0000-ED-173553-1 Schematic Page 01 of 01	

H=4ND; V=4LA

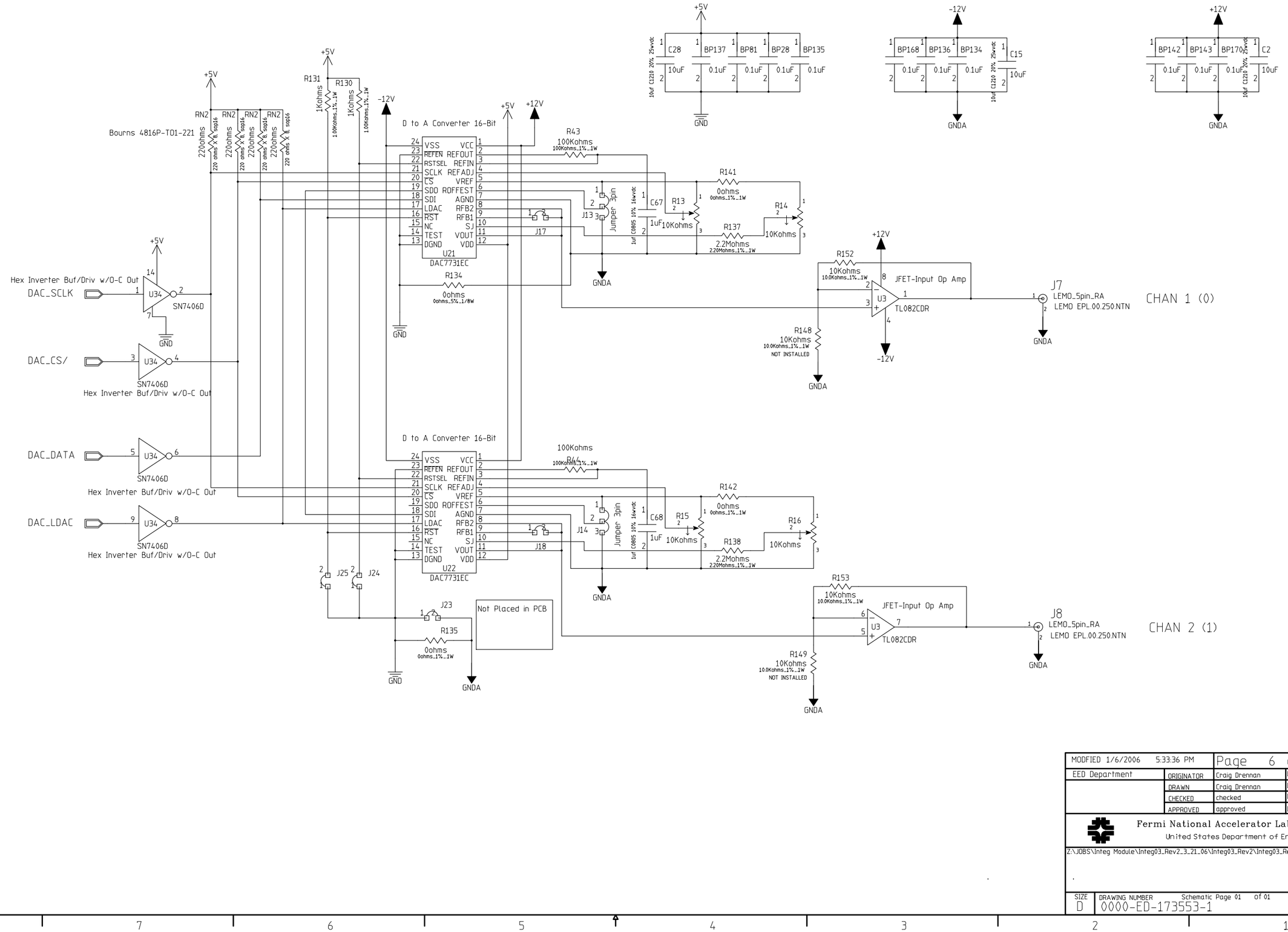

MODFIED 1/6/2006 5:33:36 PM		Page 6 of 14	
EED Department	ORIGINATOR	Craig Drennan	DATE 3/25/04
	DRAWN	Craig Drennan	DATE 10/17/04
	CHECKED	checked	DATE date
	APPROVED	approved	DATE date

Fermi National Accelerator Laboratory
United States Department of Energy

Z:\JOBS\Integ Module\Integ03_Rev2_3_21_06\Integ03_Rev2\Integ03_Rev2.prj

SIZE	DRAWING NUMBER	REV
D	0000-ED-173553-1 Schematic Page 01 of 01	

H=8ND, V=4LA

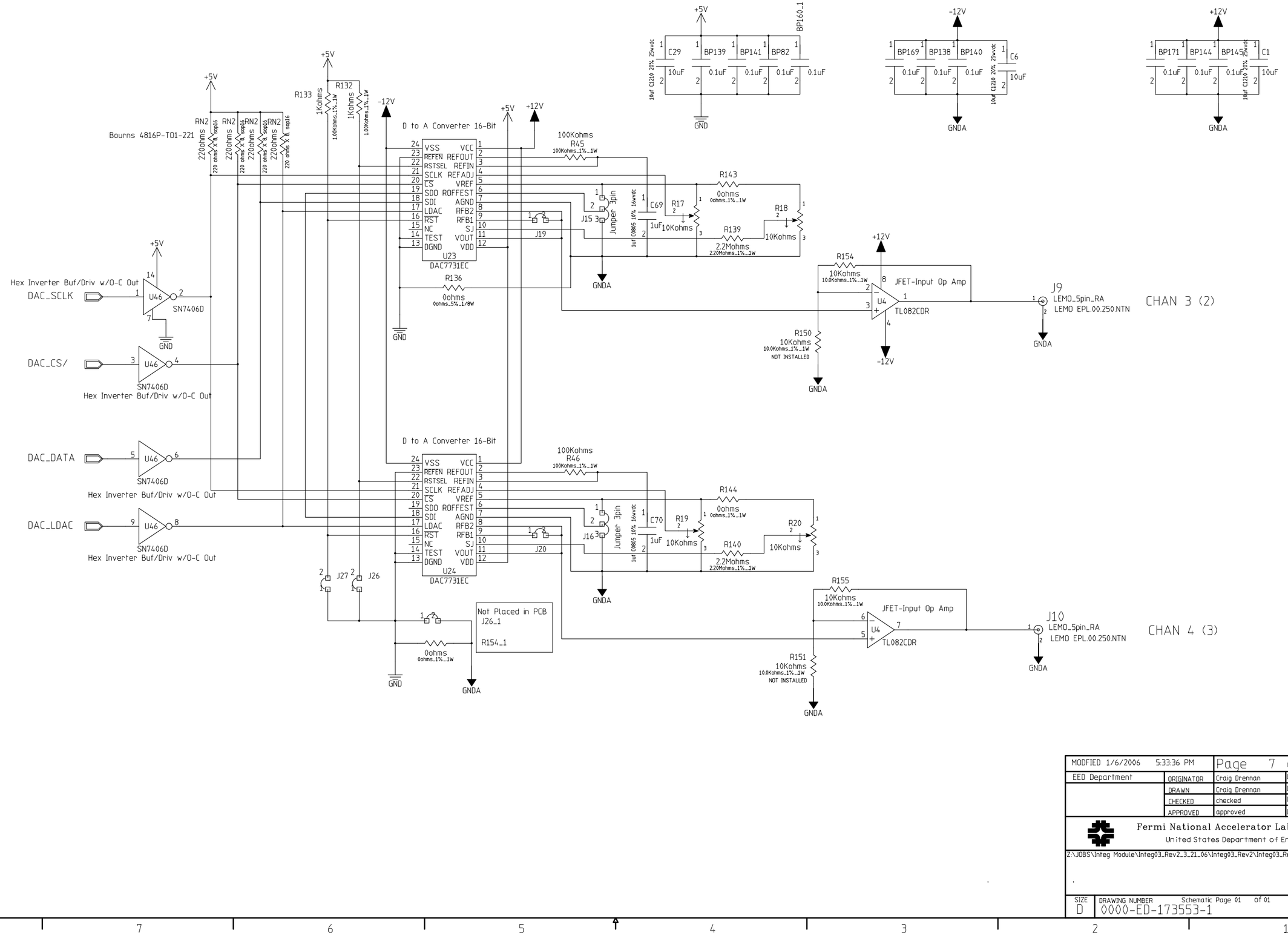

MODFIED 1/6/2006 5:33:36 PM		Page 7 of 14	
EED Department	ORIGINATOR	Craig Drennan	DATE 3/25/04
	DRAWN	Craig Drennan	DATE 10/17/04
	CHECKED	checked	DATE date
	APPROVED	approved	DATE date

Fermi National Accelerator Laboratory
United States Department of Energy

Z:\JOBS\Integ Module\Integ03_Rev2_3_21_06\Integ03_Rev2\Integ03_Rev2.prj

SIZE	DRAWING NUMBER	REV
D	0000-ED-173553-1 Schematic Page 01 of 01	

H=8ND, V=4LA

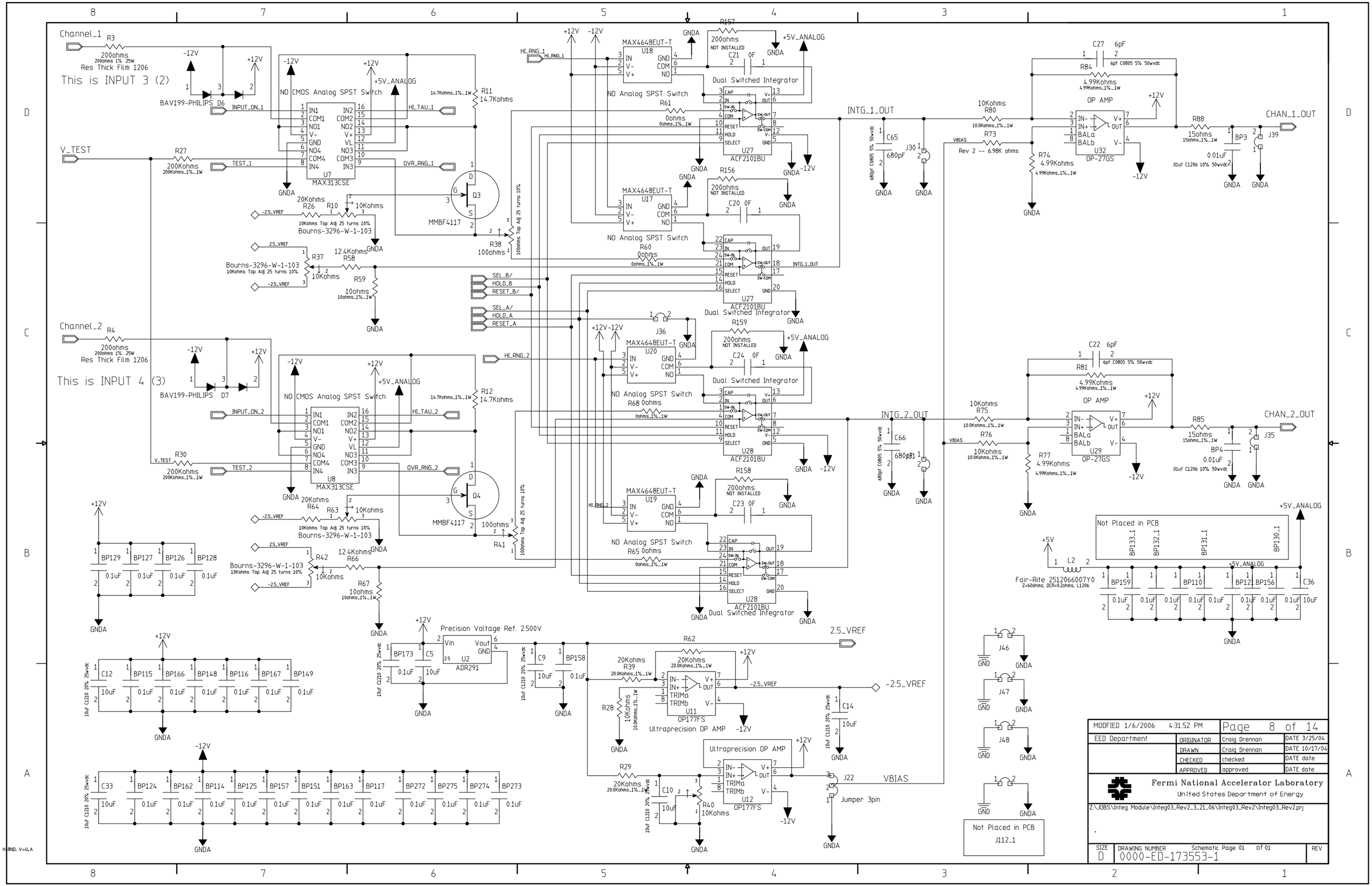

Channel_1
This is INPUT 3 (2)
Channel_2
This is INPUT 4 (3)
V_TEST
NO CMOS Analog SPST Switch
MAX313CSE
MMBF4117
MAX4648EUT-T
NO Analog SPST Switch
Dual Switched Integrator
ACF2101BU
INTG_1_OUT
INTG_2_OUT
OP AMP
OP-27GS
CHAN_1_OUT
CHAN_2_OUT
Precision Voltage Ref. 2.500V
ADR291
Ultraprecision OP AMP
OP177FS
2.5_VREF
-2.5_VREF
VBIAS
Jumper 3pin
Not Placed in PCB
Fair-Rite 2512066007Y0
Z=600ohms, DCR=0.2ohms, L1206
Bourns-3296-W-1-103
Res Thick Film 1206
BAV199-PHILIPS
MODFIED 1/6/2006 4:31:52 PM
Page 8 of 14
EED Department
ORIGINATOR Craig Drennan DATE 3/25/04
DRAWN Craig Drennan DATE 10/17/04
CHECKED checked DATE date
APPROVED approved DATE date
Fermi National Accelerator Laboratory
United States Department of Energy
Z:\JOBS\Integ Module\Integ03_Rev2_3_21_06\Integ03_Rev2\Integ03_Rev2.prj
SIZE D
DRAWING NUMBER 0000-ED-173553-1
Schematic Page 01 of 01
REV

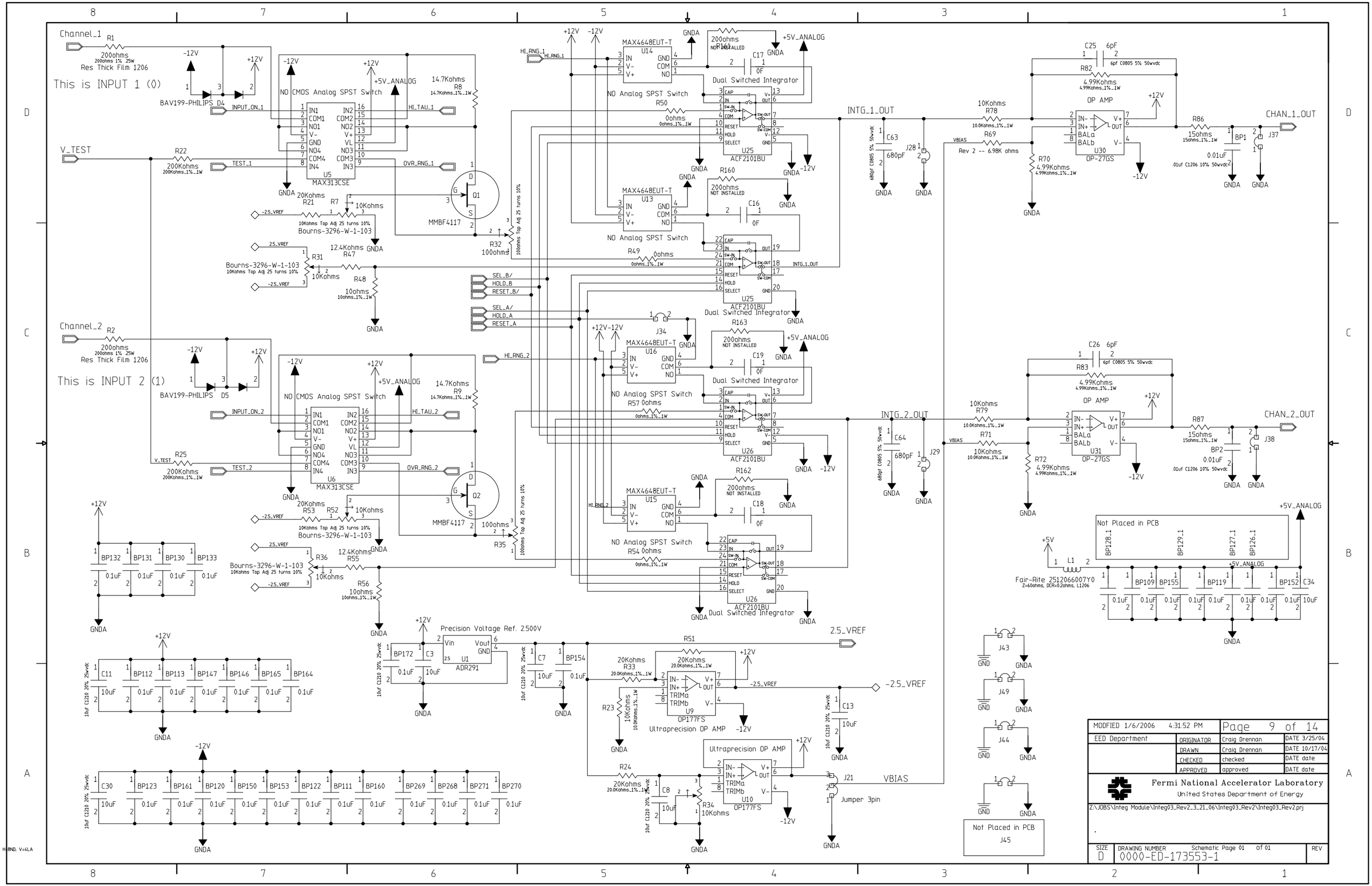

Channel_1
This is INPUT 1 (0)
Channel_2
This is INPUT 2 (1)
NO CMOS Analog SPST Switch
MAX313CSE
MAX4648EUT-T
NO Analog SPST Switch
Dual Switched Integrator
ACF2101BU
OP AMP
OP-27GS
INTG_1_OUT
INTG_2_OUT
CHAN_1_OUT
CHAN_2_OUT
Precision Voltage Ref. 2.500V
ADR291
Ultraprecision OP AMP
OP177FS
Jumper 3pin
VBIAS
Not Placed in PCB
Fair-Rite 2512066007Y0
MODFIED 1/6/2006 4:31:52 PM
Page 9 of 14
EED Department
ORIGINATOR Craig Drennan DATE 3/25/04
DRAWN Craig Drennan DATE 10/17/04
CHECKED checked DATE date
APPROVED approved DATE date
Fermi National Accelerator Laboratory
United States Department of Energy
Z:\JOBS\Integ Module\Integ03_Rev2_3_21_06\Integ03_Rev2\Integ03_Rev2.prj
SIZE D
DRAWING NUMBER 0000-ED-173553-1
Schematic Page 01 of 01
REV

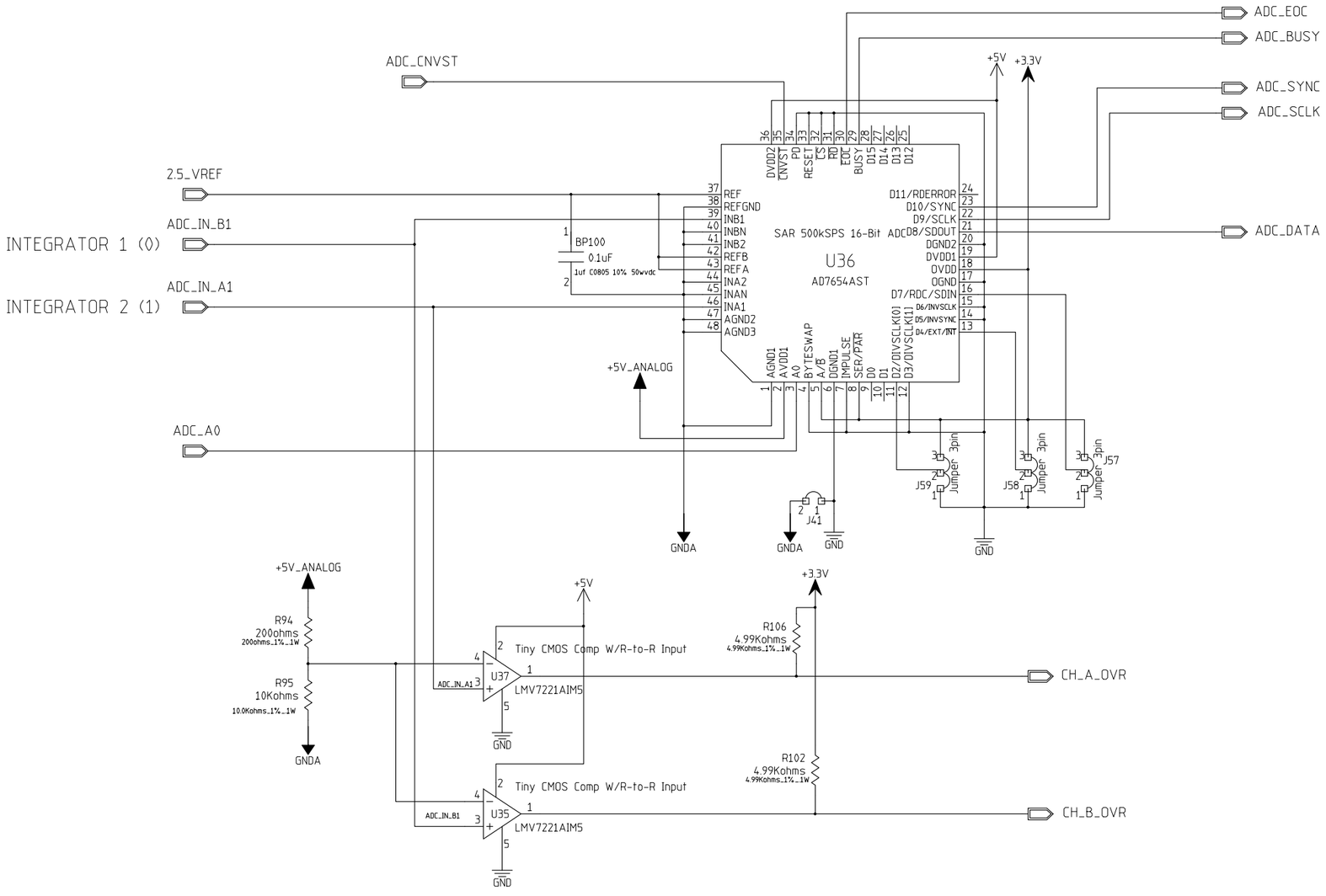

MODFIED 1/6/2006 4:39:26 PM		Page 10 of 14	
EED Department	ORIGINATOR	Craig Drennan	DATE 3/25/04
	DRAWN	Craig Drennan	DATE 10/17/04
	CHECKED	checked	DATE date
	APPROVED	approved	DATE date

Fermi National Accelerator Laboratory
United States Department of Energy

Z:\JOBS\Integ Module\Integ03_Rev2_3_21_06\Integ03_Rev2\Integ03_Rev2.prj

.

SIZE	DRAWING NUMBER	REV
D	0000-ED-173553-1 Schematic Page 01 of 01	

H=BND; V=4LA

ADC_EOC
ADC_BUSY
ADC_SYNC
ADC_SCLK
ADC_DATA
ADC_CNVST
+5V
+3.3V
2.5_VREF
ADC_IN_B1
INTEGRATOR 3 (2)
ADC_IN_A1
INTEGRATOR 4 (3)
ADC_A0
BP104
0.1uF
1uf C0805 10% 50wvdc
SAR 500kSPS 16-Bit ADC
U39
AD7654AST
DVDD2 CNVST PD RESET CS RD EOC BUSY D15 D14 D13 D12
REF REFGND INB1 INBN INB2 REFB REFA INA2 INAN INA1 AGND2 AGND3
D11/RDERROR D10/SYNC D9/SCLK D8/SDOUT DGND2 DVDD1 OVDD OGND D7/RDC/SDIN D6/INVSCLK D5/INVSYNC D4/EXT/INT
AGND1 AVDD1 A0 BYTESWAP A/B DGND1 IMPULSE SER/PAR D0 D1 D2/DIVSCLK[0] D3/DIVSCLK[1]
+5V_ANALOG
GNDA
GND
J42
J62
J61
J60
Jumper 3pin
+5V_ANALOG
R96
200ohms
200ohms_1%_1W
R97
10Kohms
10.0Kohms_1%_1W
+5V
Tiny CMOS Comp W/R-to-R Input
U40
LMV7221AIM5
ADC_IN_A1
R105
4.99Kohms
4.99Kohms_1%_1W
+3.3V
CH_A_OVR
R104
4.99Kohms
4.99Kohms_1%_1W
U38
LMV7221AIM5
ADC_IN_B1
CH_B_OVR
+3.3V
C39
BP96
BP88
10uF
0.1uF
0.1uF
10uf C1210 20% 25wvdc
+5V_ANALOG
BP105
BP106
C32
0.1uF
0.1uF
10uF
+5V
BP95
BP87
C37
0.1uF
0.1uF
10uF

MODFIED 1/6/2006 4:39:26 PM		Page 11 of 14	
EED Department	ORIGINATOR	Craig Drennan	DATE 3/25/04
	DRAWN	Craig Drennan	DATE 10/17/04
	CHECKED	checked	DATE date
	APPROVED	approved	DATE date

Fermi National Accelerator Laboratory
United States Department of Energy

Z:\JOBS\Integ Module\Integ03_Rev2_3_21_06\Integ03_Rev2\Integ03_Rev2.prj

SIZE	DRAWING NUMBER	REV
D	0000-ED-173553-1 Schematic Page 01 of 01	

H=BND, V=4LA

Altera Cyclone EP1C6 Device

U57

EP1C6Q240C8

Fair-Rite 2512066007Y0
Z=60ohms, DCR=0.2ohms, L1206

Silicon Serial Number

DS2401

AT17LV002A-10JC

ATMEL FPGA EEPROM

3m2510-6003UB

MODFIED 1/6/2006 4:48:20 PM		Page 12 of 14	
EED Department	ORIGINATOR	Craig Drennan	DATE 3/25/04
	DRAWN	Craig Drennan	DATE 10/17/04
	CHECKED	checked	DATE date
	APPROVED	approved	DATE date

Fermi National Accelerator Laboratory
United States Department of Energy

Z:\JOBS\Integ Module\Integ03_Rev2_3_21_06\Integ03_Rev2\Integ03_Rev2.prj

SIZE	DRAWING NUMBER	REV
D	0000-ED-173553-1	

Schematic Page 01 of 01

H=8ND; V=4LA

P1
AMP 650473-5
Conn 96pin VME RA PCB Male
3 x 32 Standard Size DIN 41612, Type C, Right Angle Pin Assy, PCB, Male.
vmeD[15..0]
vmeA[23..1]
+5V_IN
+12V_IN
-12V_IN
+5V
+12V
-12V
+3.3V
GND
GNDA
Octal Buffer/Drivers w/3-State
U65
SN74LVTH541DW
D-Type Latch, Octal, W/3-State
U61
SN74LVTH573DW
SN74LVTH573DW so20w
U66
U67
U68
SN74LVTH543DW
U63
U64
Octal Registered Transceiver
vDD[15..00]
vDD[15..0]
vAA[23..1]
BAS/
BWRITE/
BDS0/
BDS1/
BSYSCLK
BSYSRST/
BSYSRST2/
BIACK/
BAM3
BAM1
BAM0
BLWORD/
BAM4
BAM5
CEAB/
OEAB/
OEBA/
AMATCH/
AMATCHx/
J72
Jumper 3pin
SW[7..1]
SW[7..1]
RN11
10Kohms
10K ohms X 8, sop16
Bourns 4816P-T01-103
7 Position Dip Switch SMD
SW2
CTS-204-7ST
Quad 2-Input Positive-NAND Buf
U60
SN74S38D
DTACK
BERR
F5
3a
F4
1 AMP
Fair-Rite 2512066007Y0
Z=60ohms, DCR=0.2ohms, L1206
L4
F3
L3
D10
1N5908
D9
D8
1N6277
J76
J75
C59
C58
BP23
BP24
C56
BP9
BP10
C57
BP7
BP8
BP18
BP17
BP16
BP15
BP14
BP13
BP27
10uF
0.1uF
1uf C0805 10% 50wvdc
10uf C1210 20% 25wvdc

MODFIED 1/6/2006 4:45:16 PM		Page 13 of 14	
EED Department	ORIGINATOR	Craig Drennan	DATE 3/25/04
	DRAWN	Craig Drennan	DATE 10/17/04
	CHECKED	checked	DATE date
	APPROVED	approved	DATE date

Fermi National Accelerator Laboratory
United States Department of Energy

Z:\JOBS\Integ Module\Integ03_Rev2_3_21_06\Integ03_Rev2\Integ03_Rev2.prj

SIZE	DRAWING NUMBER	Schematic Page 01 of 01	REV
D	0000-ED-173553-1		

H=8ND; V=4LA

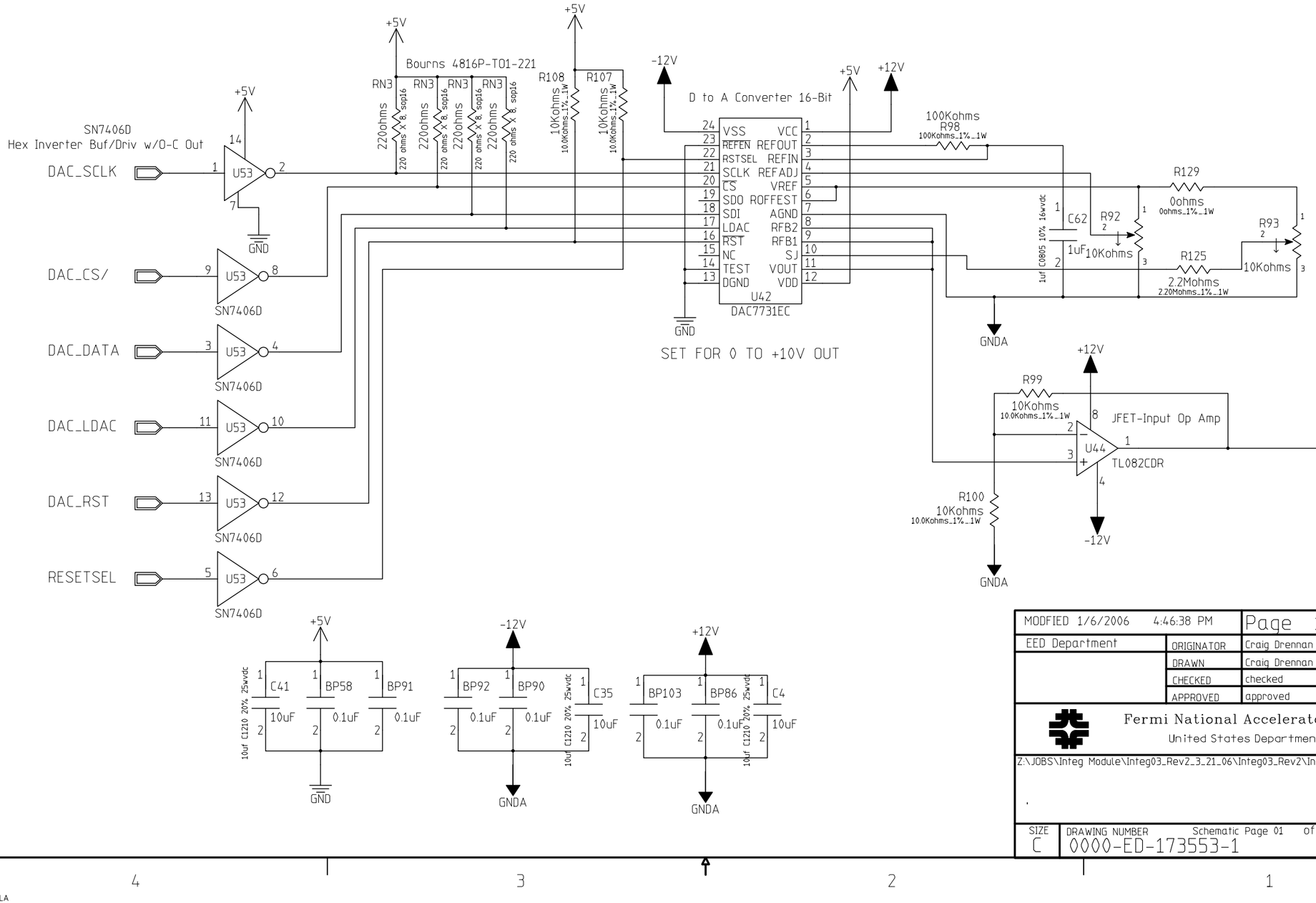

MODFIED 1/6/2006 4:46:38 PM		Page 14 of 14	
EED Department	ORIGINATOR	Craig Drennan	DATE 3/25/04
	DRAWN	Craig Drennan	DATE 10/17/04
	CHECKED	checked	DATE date
	APPROVED	approved	DATE date

Fermi National Accelerator Laboratory
United States Department of Energy

Z:\JOBS\Integ Module\Integ03_Rev2_3_21_06\Integ03_Rev2\Integ03_Rev2.prj

SIZE	DRAWING NUMBER	REV
C	0000-ED-173553-1 Schematic Page 01 of 01	

H=4ND; V=4LA