Pre-injector Upgrade Updates (19 Jan 2011 – 09 Feb 2011)

C.Y. Tan
09 Feb 2011

Source Status

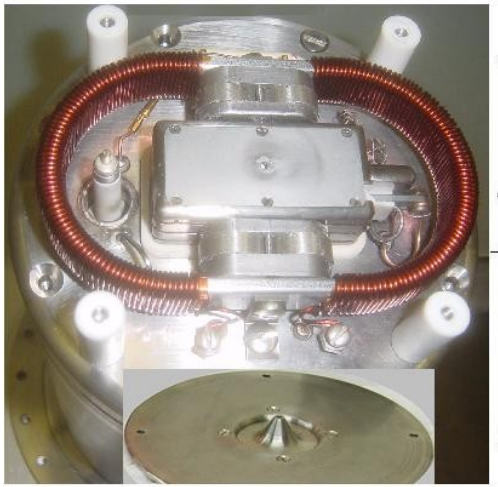

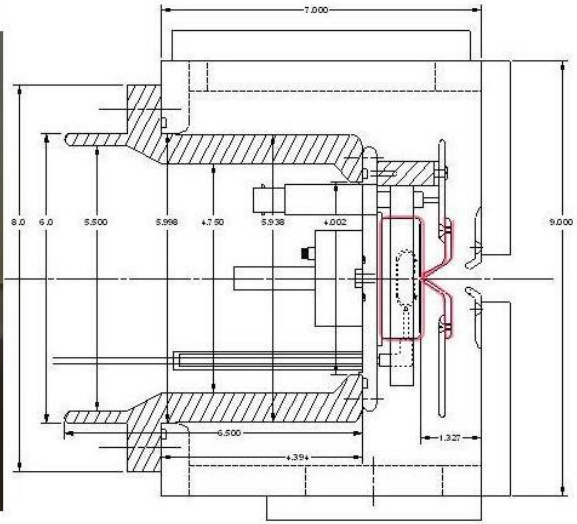

Device	Status	Comments
Source	Drawings nearly completed	Cube has been procured.

Time lines

- We should get some sort of rough time line laid out.

REV	DESCRIPTION	DRAWN	DATE
		APPROVED	DATE

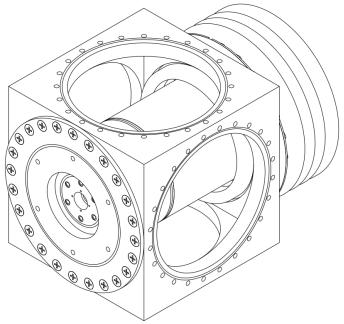

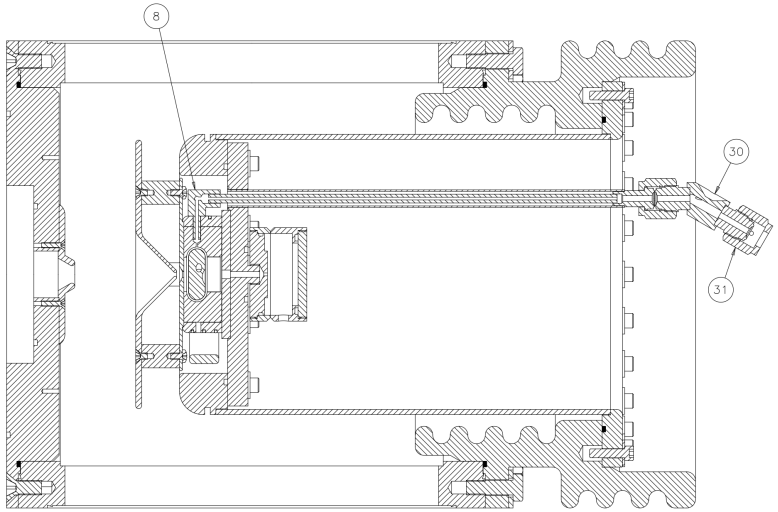

SECTION B-B

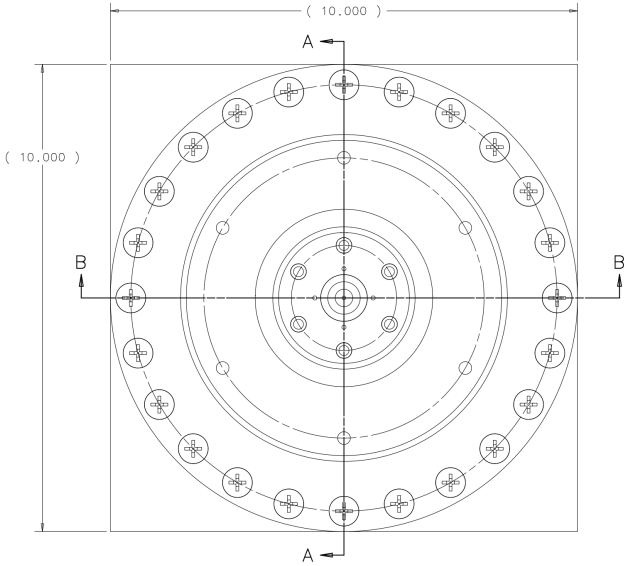

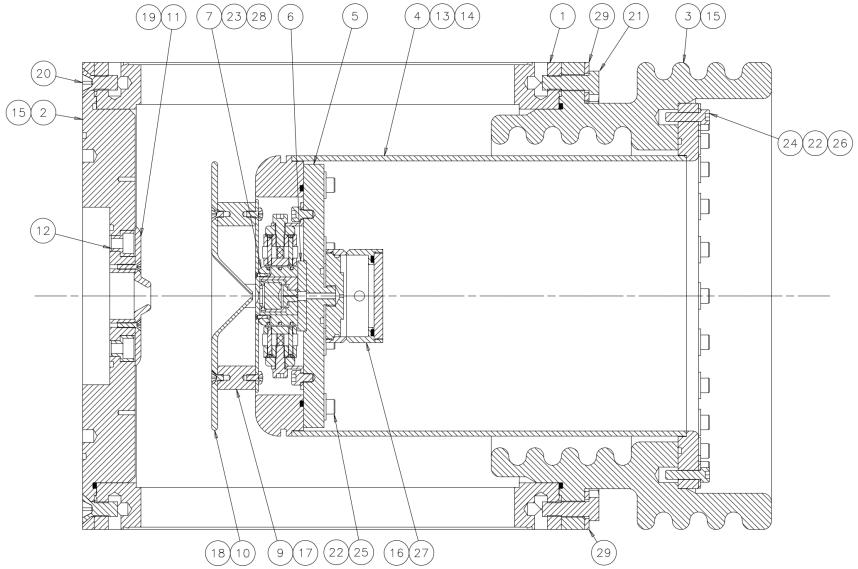

SECTION A-A

	ITEM	PART NO.	DESCRIPTION OR SIZE	QTY.
	31	SS-4-VCR-1	SWAGELOK FEM. NUT - CAJON	1
	30	459212	VCR CUSTOM FITTING	1
	29	458936	HIGH VOLTAGE INSULATOR WASHER PLATE HALF	2
NOT SHOWN	28	458938	TEMPORARY ALIGNMENT PIN	2
	27		GAS VALVE ASSEMBLY	1
	26	91731A049	MCMASTER-CARR #10-32 SS THREADED INSERT	24
	25		#10-32 SS SHCS 7/8" LONG	8
	24		#10-32 SS SHCS 3/4" LONG	24
	23		#2-64 SS SHCS 1" LONG	2
	22		#10 SS FLAT WASHER	32
	21		5/16-24 SS HHCS 1" LONG	24
	20		5/16-24 SS FLAT HEAD CAP SCREW 3/4" LONG	24
	19		#4-40 SS FLAT HEAD SCREW 1/2" LONG	4
	18		#6-32 SS FLAT HEAD SCREW 1/4" LONG	4
	17		#6-32 SS PAN HEAD SCREW 1/4" LONG	4
	16	#2-119	PARKER O-RING ø.924ID X ø.094	1
	15	#2-171	PARKER O-RING ø7.987ID X ø.094	2
	14	#2-157	PARKER O-RING ø4.487ID X ø.094	1
	13	#2-165	PARKER O-RING ø6.487ID X ø.094	1
	12	458741	FRONT INSULATOR	6
	11	458737	GROUND ELECTRODE	1
	10	482181	EXTRACTION ELECTRODE	1
	9	482179	SOURC INSULATOR POST	4
	8	482206	CESIUM FEED ELBOW	1
	7	482216	SOURCE ASSEMBLY	1
	6	60574	SOURCE CERAMIC SPACER	1
	5	482217	MOUNTING PLATE WELDMENT	1
	4	482207	SOURCE MOUNT WELDMENT	1
	3	458738	HIGH VOLTAGE INSULATOR	1
	2	458736	FRONT MOUNTING PLATE	1
	1	458933	MDC 10" CUBE	1

PARTS LIST

UNLESS OTHERWISE SPECIFIED			ORIGINATOR	C.SCHMIDT	24-NOV-2008
FRAC	DEC	ANGLES	DRAWN	M.KIELAR	07-JAN-2011
± 1/32	± .010	± 1°	CHECKED		
			APPROVED		

1. BREAK ALL SHARP EDGES .015 MAX.
2. DO NOT SCALE DRAWING.
3. DIMENSIONS BASED UPON ASME Y14.5M-1994
4. MAX. ALL MACH. SURFACES 64
5. DRAWING UNITS:U.S.INCH

USED ON

MATERIAL SEE PARTS LIST

FERMI NATIONAL ACCELERATOR LABORATORY
UNITED STATES DEPARTMENT OF ENERGY

PRE-ACCELERATOR UPGRADE H- INJECTOR SOURCE ASSEMBLY

SCALE	DRAWING NUMBER	SHEET	REV
3:4	5520.000-MD-482245	1 OF 1	

CREATED WITH : Ideas12NXSeries GROUP: ACCELERATOR MECH. SUPPT.

Created: 17:22:25 on 19-01-11 (D-M-Y) By: mkielar State: 1-INITIAL

LEBT Status

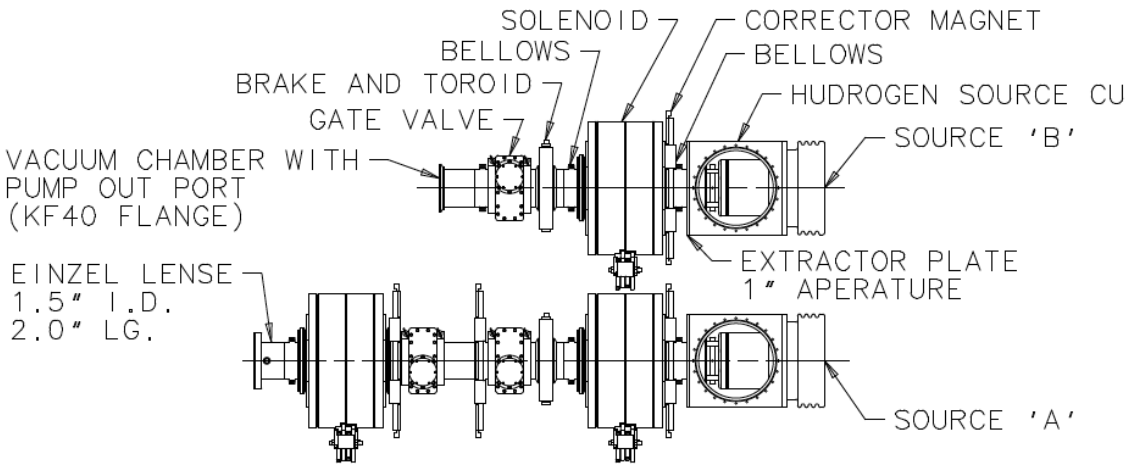

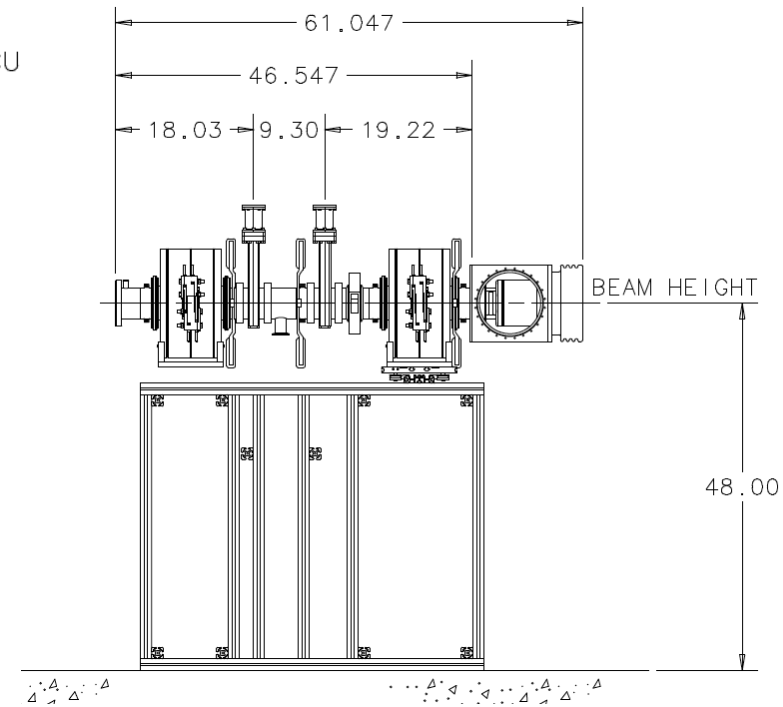

Device	Status	Comments
Correctors	Correctors are being built	Milhous will be building them
Toroid	Toroids	Aisha is looking into making a special Pearson toroid with length ~1.5" for MEBT. $3.6k per toroid. Ordered 2.
	Einzel lens	Drawings completed
	Solenoids	Lots of problems with windings. Tooling helps with preventing shorts. 2 months for 1st solenoid.

RFQ Status

- Copper plating of RFQ housing is complete. (Dec 2010)
- Vanes being machined. (Jan 2011)
- Visit in March (tentative)

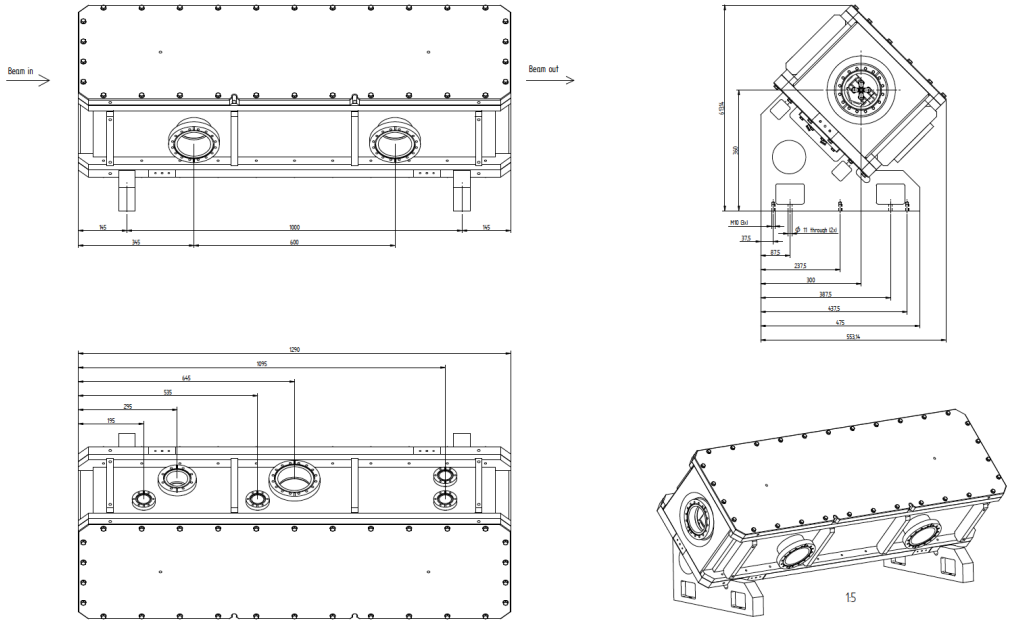

MEBT Status

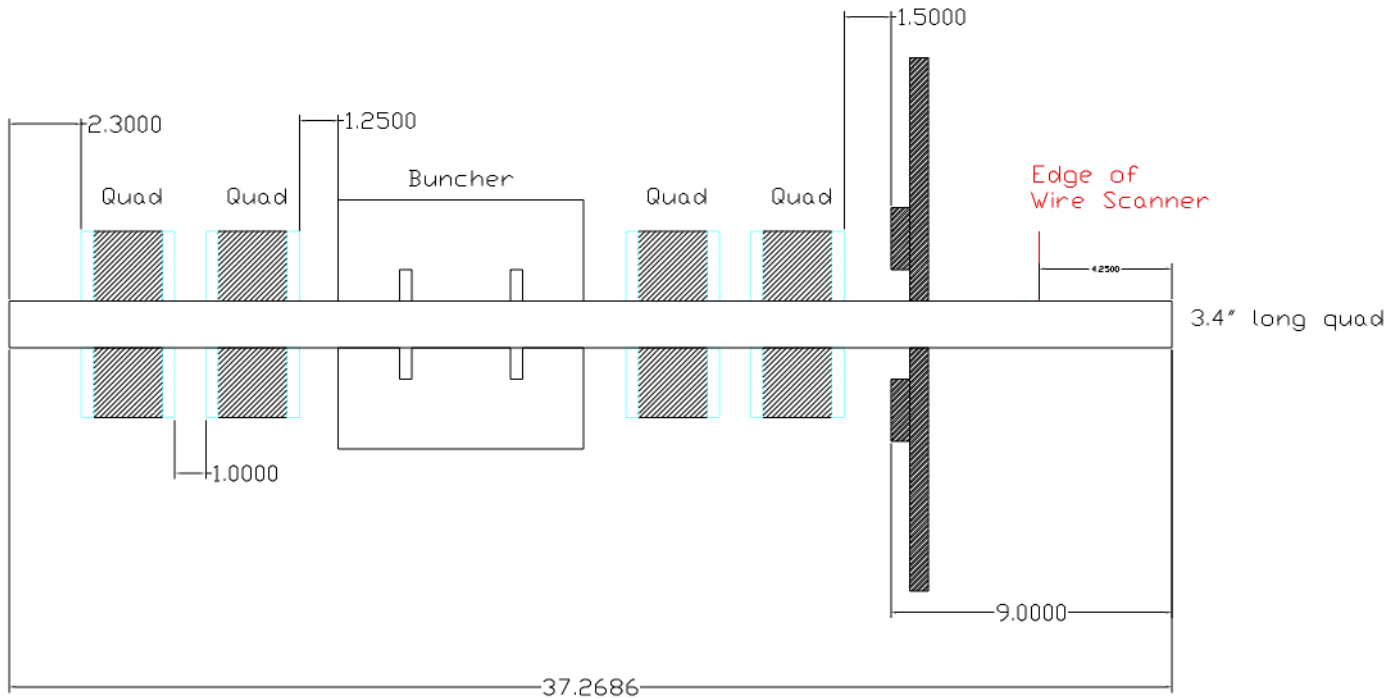

Quads	New quads have been designed with correctors.	See next slide.
Buncher	TIME has inserted grids into Buncher (30 Jan)	
Power for quads	Specs to follow	Quads being redone.
Power for buncher		Use present buncher supply in the line.
Connection to Tank	Remove large flange of Tank1	

Machine grid to put in fingers for buncher

Discussions with Okamura and Time Co. Time built a prototype with ring and fingers.
We asked Time to go ahead to put in grooves to the grid holders.

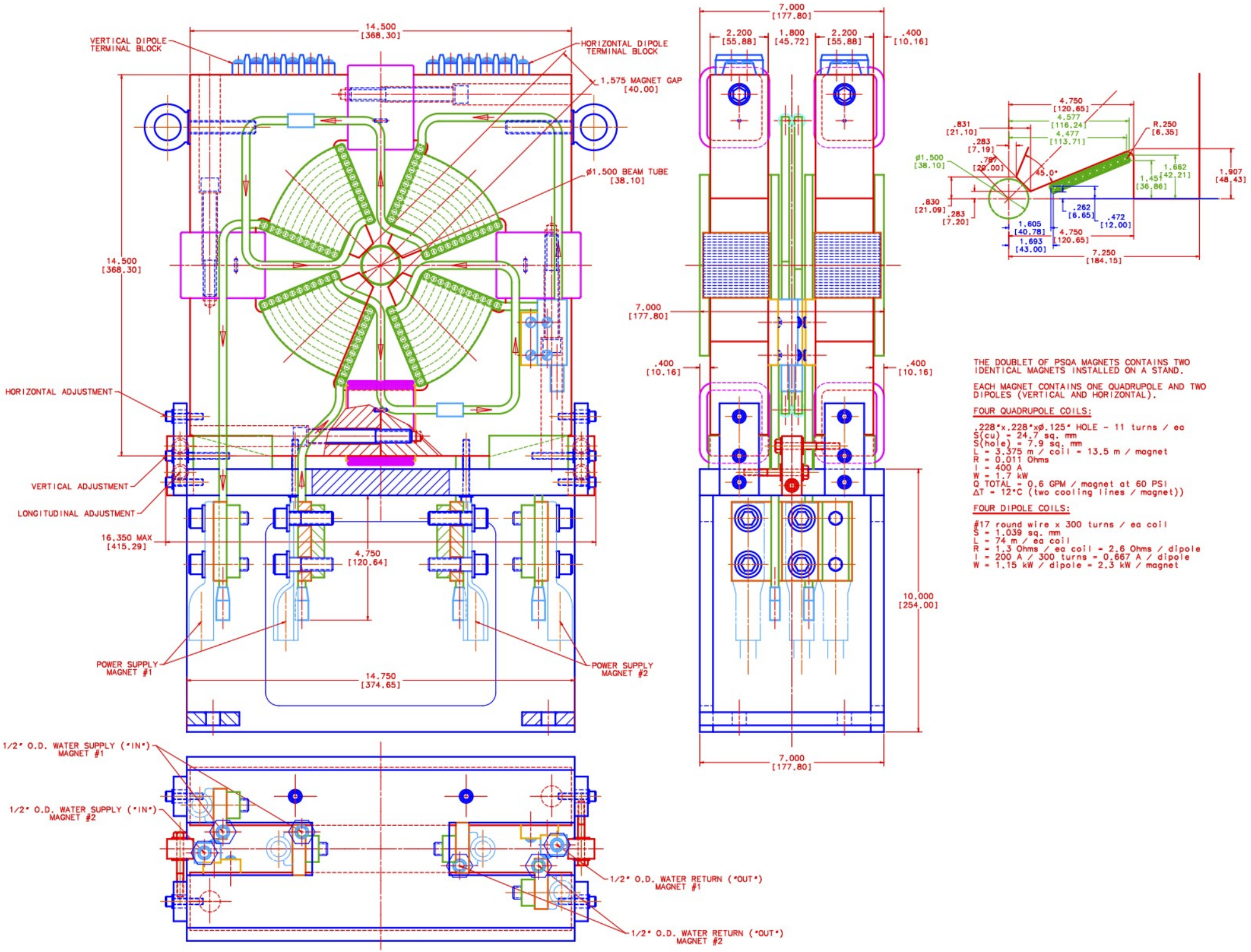

THE DOUBLET OF PSQA MAGNETS CONTAINS TWO IDENTICAL MAGNETS INSTALLED ON A STAND.

EACH MAGNET CONTAINS ONE QUADRUPOLE AND TWO DIPOLES (VERTICAL AND HORIZONTAL).

FOUR QUADRUPOLE COILS:

.228"x.228"xø.125" HOLE - 11 turns / ea
S(cu) = 24.7 sq. mm
S(hole) = 7.9 sq. mm
L = 3.375 m / coil = 13.5 m / magnet
R = 0.011 Ohms
I = 400 A
W = 1.7 kW
Q TOTAL = 0.6 GPM / magnet at 60 PSI
ΔT = 12°C (two cooling lines / magnet))

FOUR DIPOLE COILS:

#17 round wire x 300 turns / ea coil
S = 1.039 sq. mm
L = 74 m / ea coil
R = 1.3 Ohms / ea coil = 2.6 Ohms / dipole
I = 200 A / 300 turns = 0.667 A / dipole
W = 1.15 kW / dipole = 2.3 kW / magnet

Quad Rotation Errors

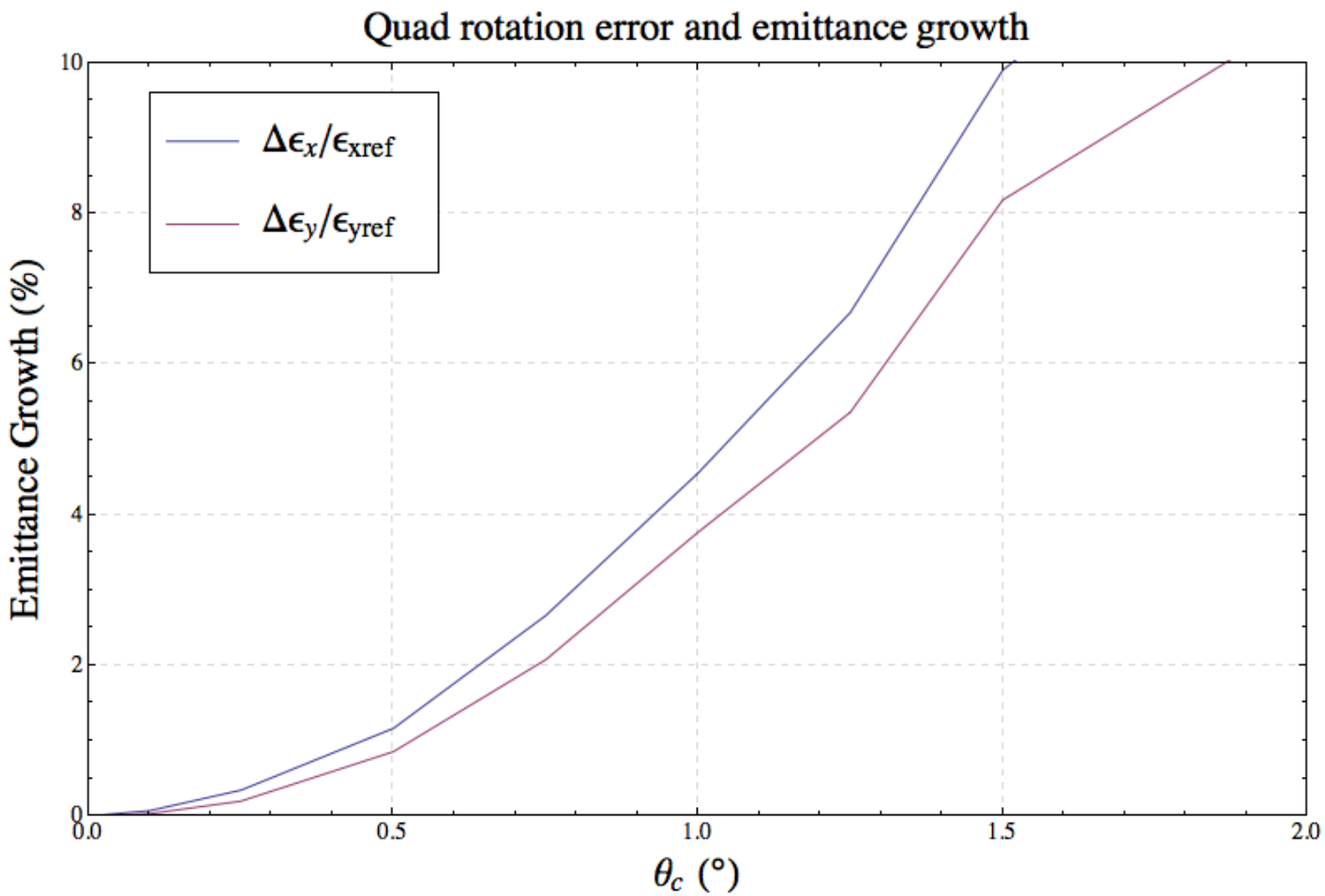

New stand obstructions?

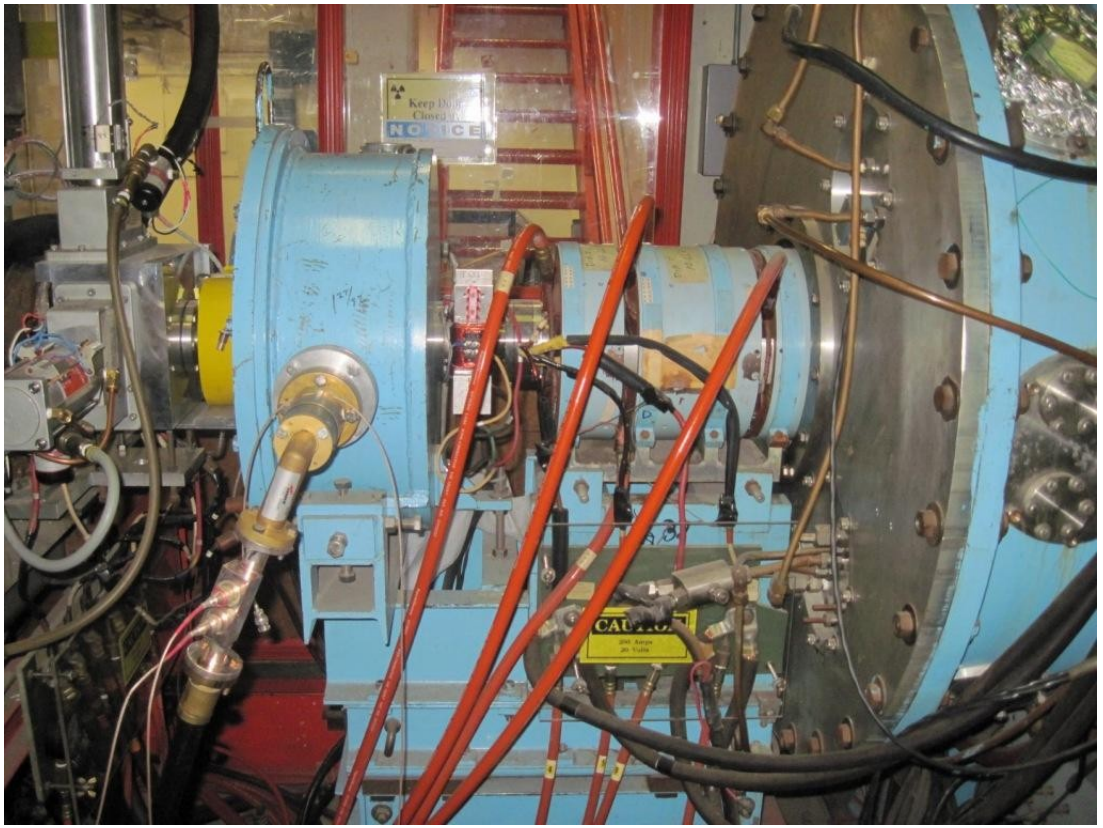

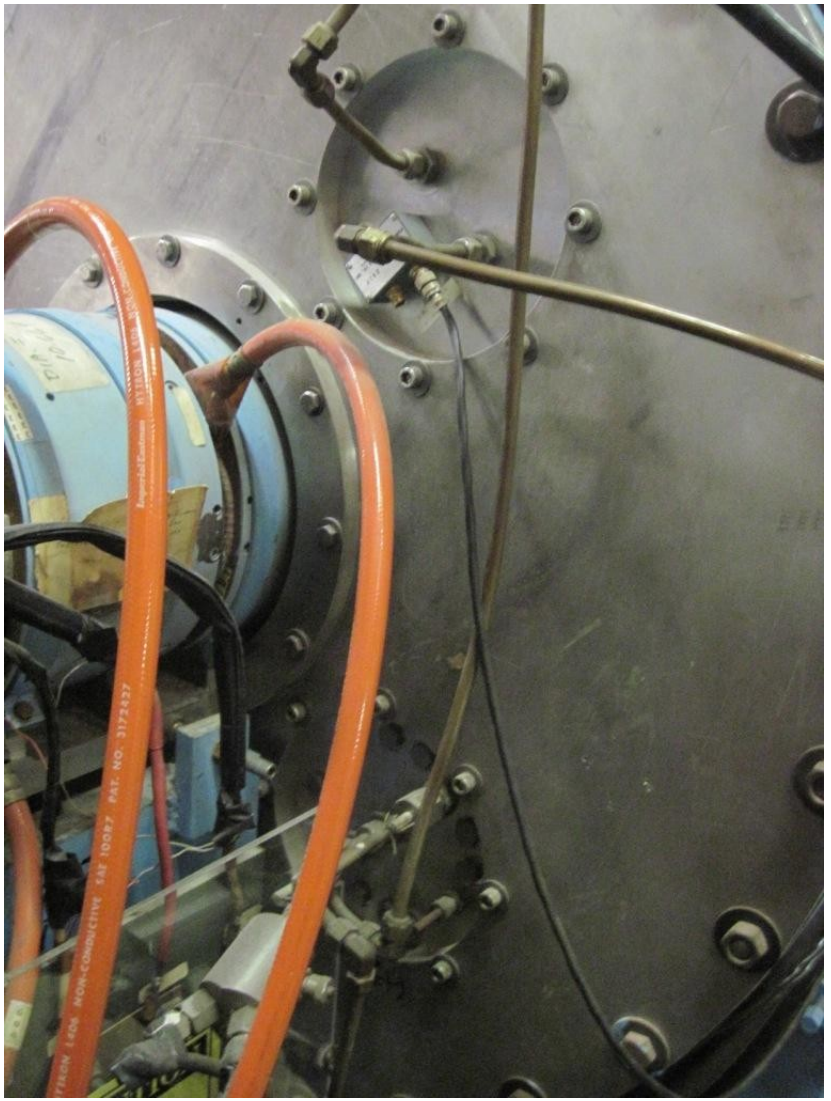

Which connectors are not used?
Change location of 1/2 quad power in.

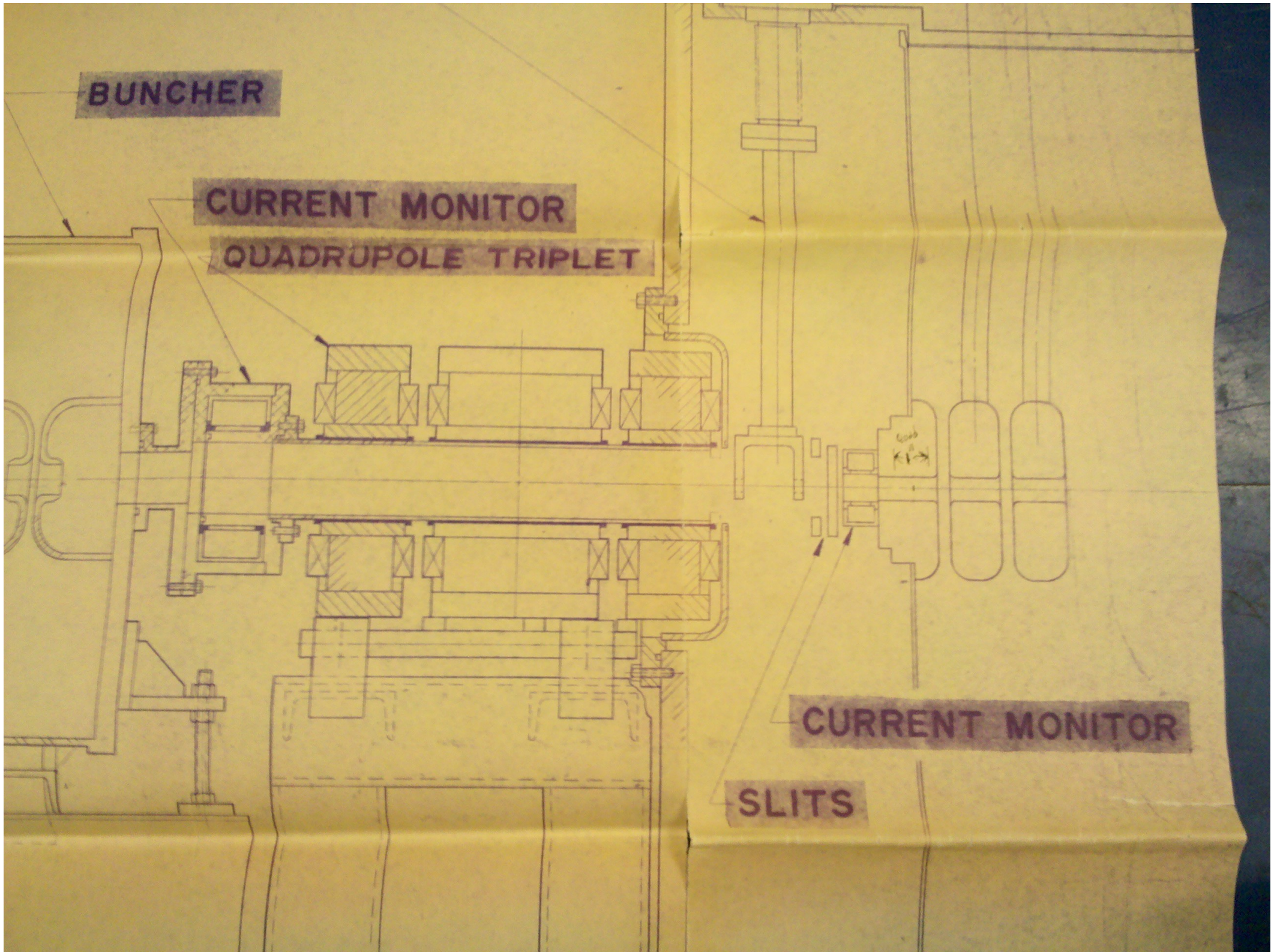
BUNCHER
CURRENT MONITOR
QUADRUPOLE TRIPLET
CURRENT MONITOR
SLITS

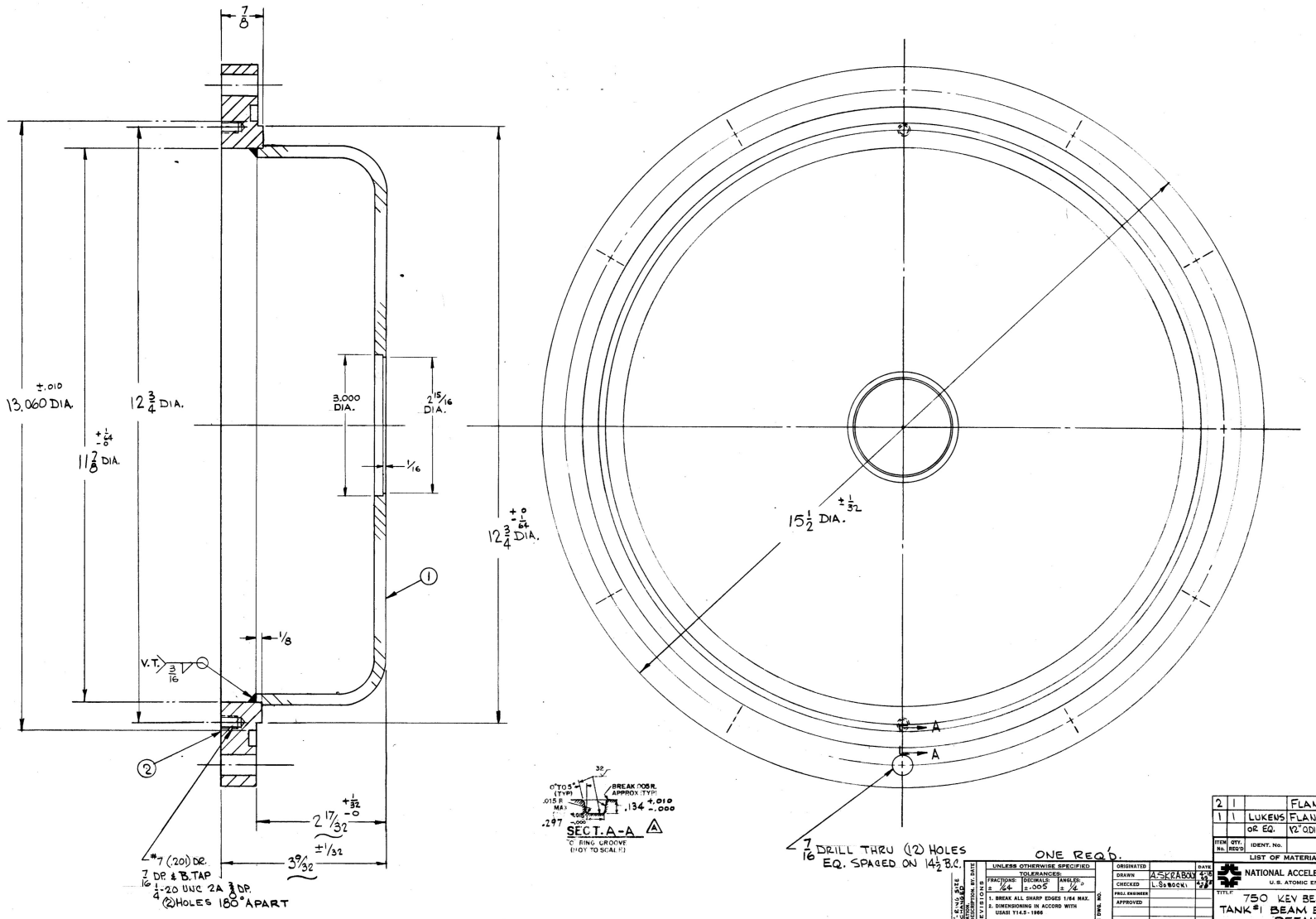

ITEM No.	QTY. REQ'D	IDENT. No.	DESCRIPTION
2	1		FLANGE 304 (STN. STL.)
1	1	LUKENS OR EQ.	FLANGED Hd. 304 (STN. STL.) 12" O.DIA. 1/4 GA. S.F. 2"

LIST OF MATERIALS OR PARTS

NATIONAL ACCELERATOR LABORATORY
U.S. ATOMIC ENERGY COMMISSION

TITLE: 750 KEV BEAM TRANSPORT TANK #1 BEAM ENTRY COVER DETAIL

SCALE 1" = 1" | SHEET OF | DRAWING No. 0214.MD-3701 | REV. A

UNLESS OTHERWISE SPECIFIED
TOLERANCES:
FRACTIONS: ± 1/64 | DECIMALS: ±.005 | ANGLES: ± 1/4°
1. BREAK ALL SHARP EDGES 1/64 MAX.
2. DIMENSIONING IN ACCORD WITH USASI Y14.5-1966

ORIGINATED | DATE
DRAWN A. SKRABOV
CHECKED L. SOBOCKI
PROJ. ENGINEER
APPROVED

A "O" RING SIZE CHANGED
SYM | LOCATION DESCRIPTION, BY, DATE
REVISIONS
USED ON DWG. NO.

FA

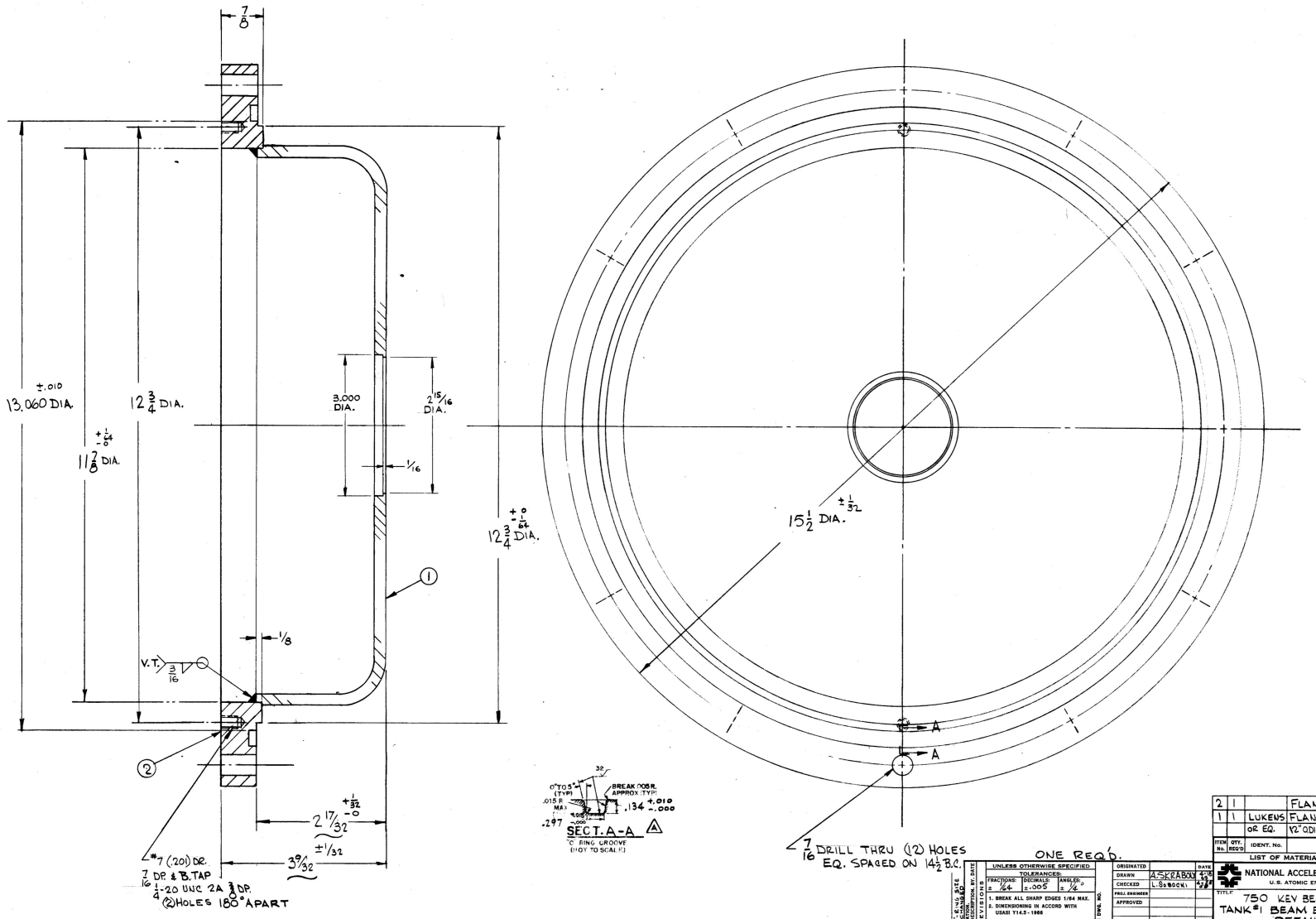

ITEM No.	QTY. REQ'D	IDENT. No.	DESCRIPTION
2	1		FLANGE 304 (STN. STL.)
1	1	LUKENS OR EQ.	FLANGED Hd. 304 (STN. STL.) 12" O.DIA. 1/4 GA. S.F. 2"

LIST OF MATERIALS OR PARTS

NATIONAL ACCELERATOR LABORATORY
U.S. ATOMIC ENERGY COMMISSION

TITLE: 750 KEV BEAM TRANSPORT TANK #1 BEAM ENTRY COVER DETAIL

SCALE 1" = 1" | SHEET OF | DRAWING No. 0214.MD-3701 | REV. A

UNLESS OTHERWISE SPECIFIED
TOLERANCES:
FRACTIONS: ± 1/64 | DECIMALS: ±.005 | ANGLES: ± 1/4°
1. BREAK ALL SHARP EDGES 1/64 MAX.
2. DIMENSIONING IN ACCORD WITH USASI Y14.5-1966

ORIGINATED | DATE
DRAWN A. SKRABOV
CHECKED L. SOBOCKI
PROJ. ENGINEER
APPROVED

A "O" RING SIZE CHANGED
SYM | LOCATION DESCRIPTION, BY, DATE
REVISIONS
USED ON DWG. NO.

FA

Controls

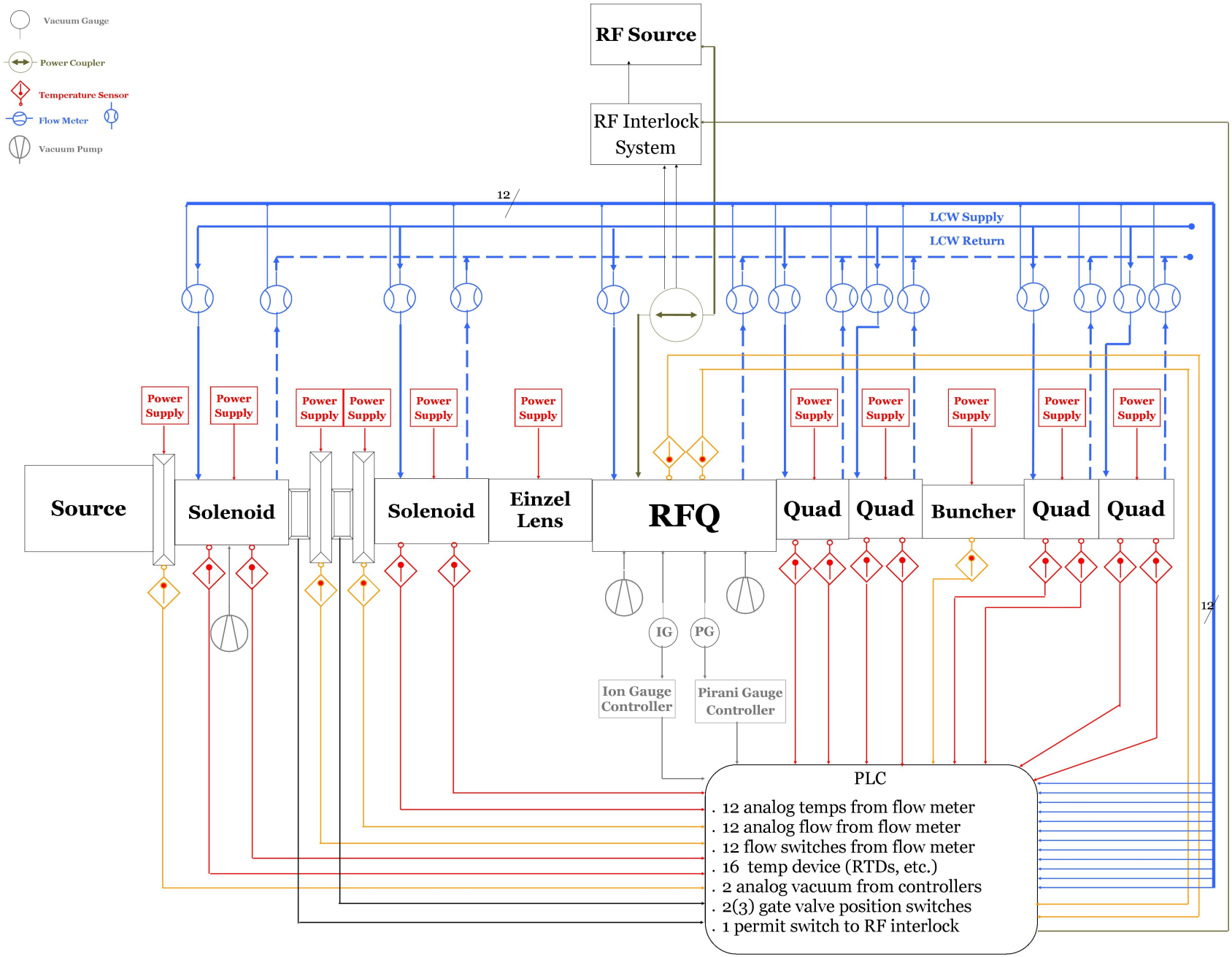
Vacuum Gauge
Power Coupler
Temperature Sensor
Flow Meter
Vacuum Pump
RF Source
RF Interlock System
12
LCW Supply
LCW Return
Power Supply
Source
Solenoid
Solenoid
Einzel Lens
RFQ
Quad
Quad
Buncher
Quad
Quad
IG
PG
Ion Gauge Controller
Pirani Gauge Controller
PLC
. 12 analog temps from flow meter
. 12 analog flow from flow meter
. 12 flow switches from flow meter
. 16 temp device (RTDs, etc.)
. 2 analog vacuum from controllers
. 2(3) gate valve position switches
. 1 permit switch to RF interlock

Test Stand

- Room has been cleaned up.
  - Beam line layout in progress
    - Water – Bob Slazak
    - Electrical – Jim Ranson
- Need to test LEBT before RFQ connection
  - Wires, toroids at the end of the LEBT, same position as the RFQ.
- Design diagnostic line.
- Drawings from Schempp are sufficient to build table.

Test Area

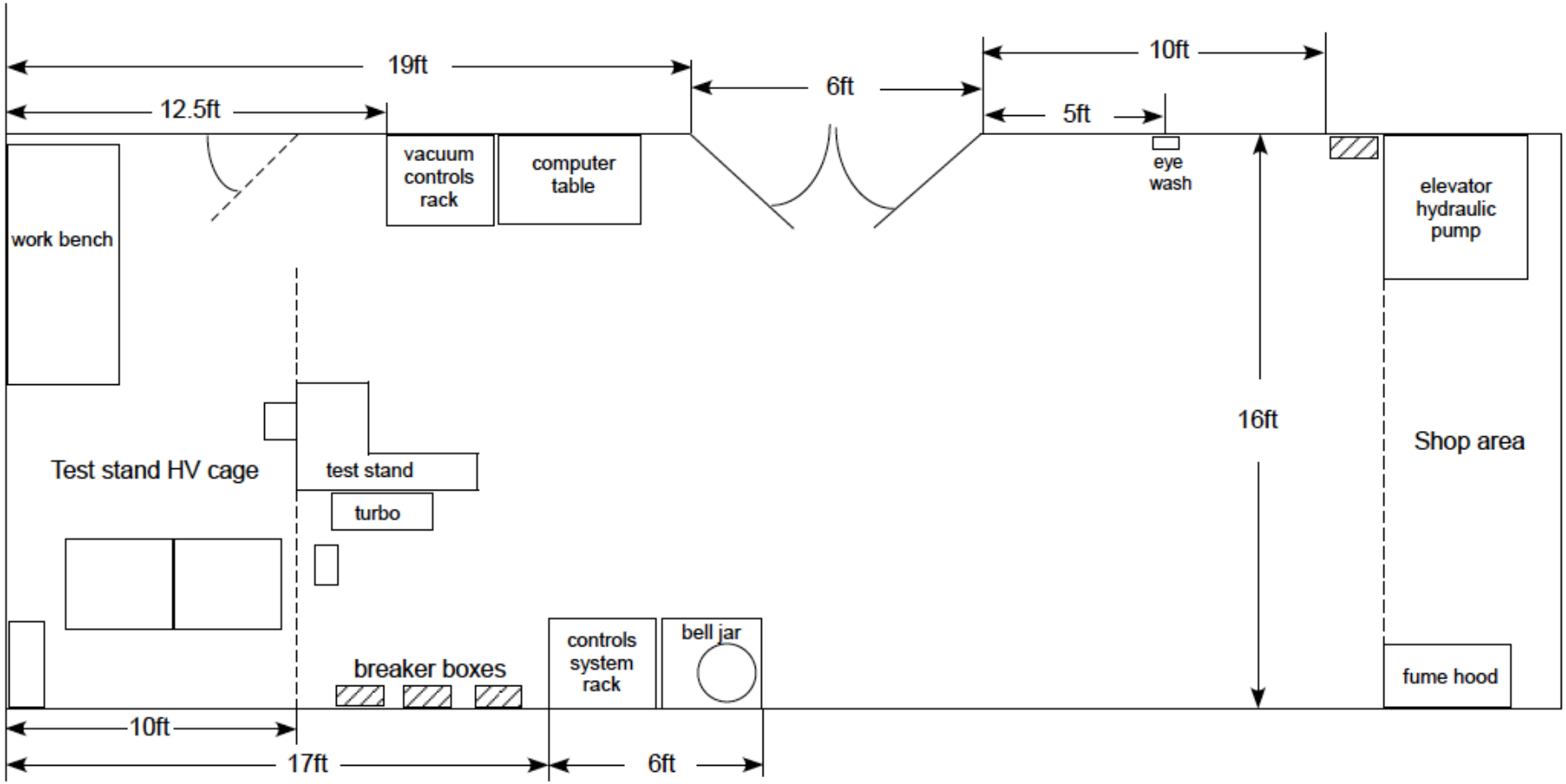
19ft
12.5ft
6ft
10ft
5ft
vacuum controls rack
computer table
eye wash
work bench
elevator hydraulic pump
16ft
Shop area
Test stand HV cage
test stand
turbo
breaker boxes
controls system rack
bell jar
fume hood
10ft
17ft
6ft

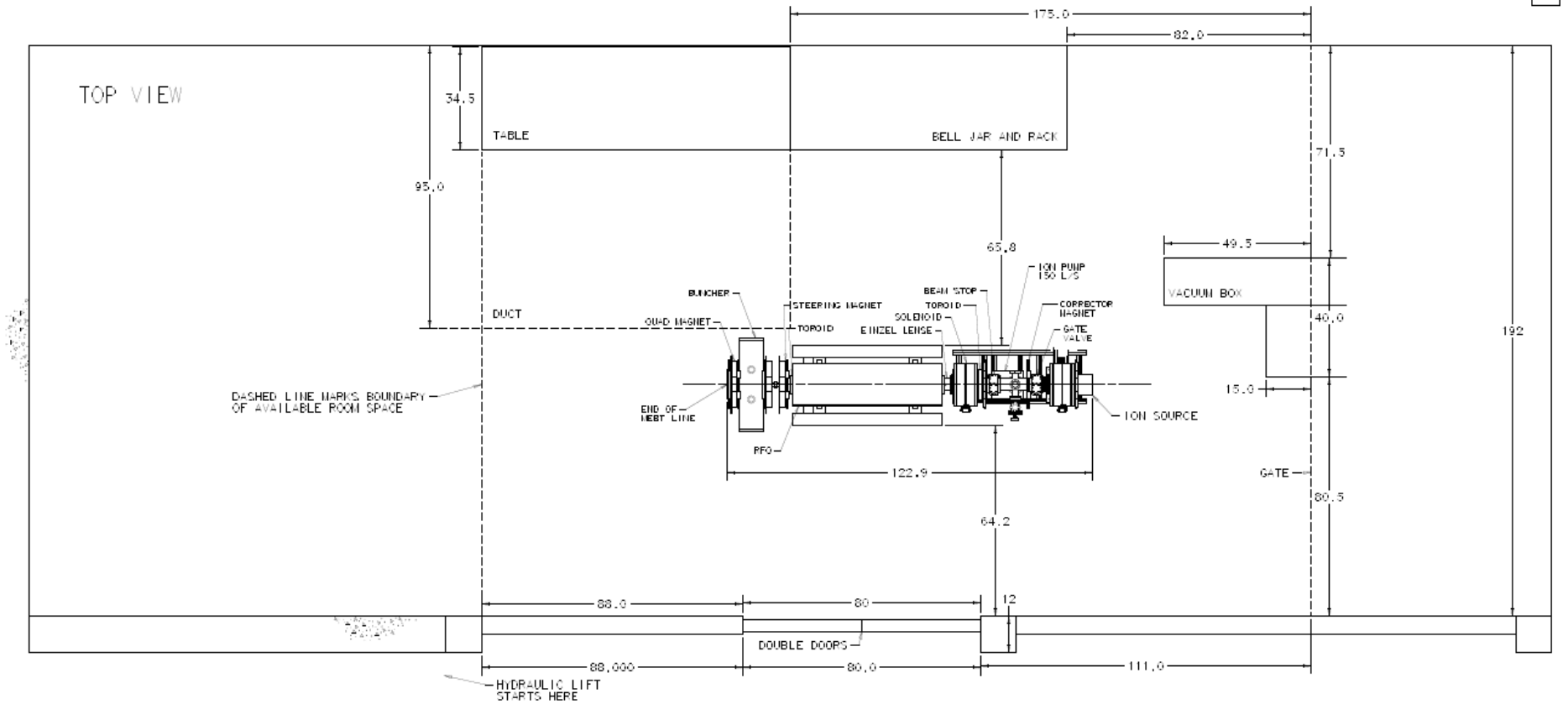
TOP VIEW
175.0
82.0
34.5
TABLE
BELL JAR AND RACK
71.5
95.0
65.8
49.5
ION PUMP
150 L/S
VACUUM BOX
BUNCHER
STEERING MAGNET
BEAM STOP
TOROID
CORRECTOR
MAGNET
DUCT
QUAD MAGNET
TOROID
SOLENOID
EINZEL LENSE
GATE
VALVE
40.0
192
DASHED LINE MARKS BOUNDARY
OF AVAILABLE ROOM SPACE
END OF
MEBT LINE
15.0
ION SOURCE
PFO
122.9
GATE
80.5
64.2
88.0
80
12
DOUBLE DOORS
88.000
80.0
111.0
HYDRAULIC LIFT
STARTS HERE

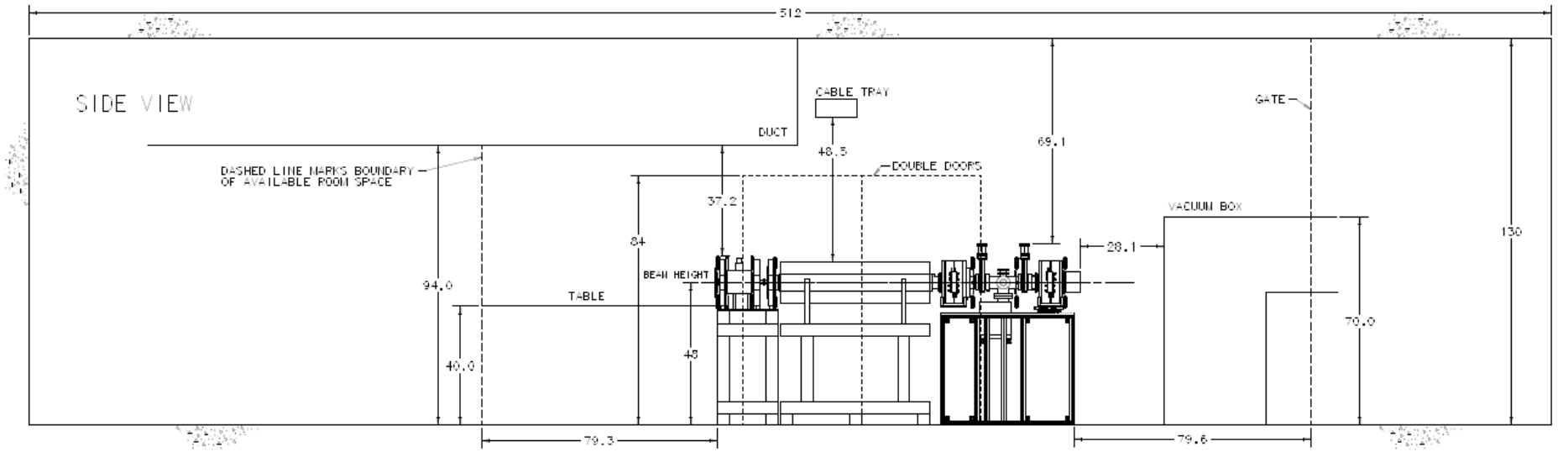
512
SIDE VIEW
CABLE TRAY
GATE
DUCT
48.5
69.1
DASHED LINE MARKS BOUNDARY
OF AVAILABLE ROOM SPACE
DOUBLE DOORS
37.2
VACUUM BOX
84
28.1
130
BEAM HEIGHT
94.0
TABLE
70.0
48
40.0
79.3
79.6

Safety

- When can the beam line layout in test area be done?

RFQ reminders

- <u>Schempp is vendor</u>
  - Make sure that the vanes are cleaned! See ISIS email.
    - Some cleaning details supplied by ISIS.
  - Review and verify on site mechanical design and construction (already in contract).