The SARAF accelerator commissioning

Dan Berkovits
On behalf of SARAF team
Soreq NRC

Seminar @ FNAL

February 10, 2011

SARAF – Soreq Applied Research Accelerator Facility

- To enlarge the experimental nuclear science infrastructure and promote research in Israel
- To develop and produce radioisotopes primarily for bio-medical applications
- To modernize the source of neutrons at Soreq and extend neutron based research and applications

SARAF Accelerator Complex

Parameter	Value	Comment
Ion Species	Protons/Deuterons	M/q ≤ 2
Energy Range	5 – 40 MeV	
Current Range	0.04 – 2 mA	Upgradeable to 4 mA
Operation	6000 hours/year	
Reliability	90%	
Maintenance	Hands-On	Very low beam loss

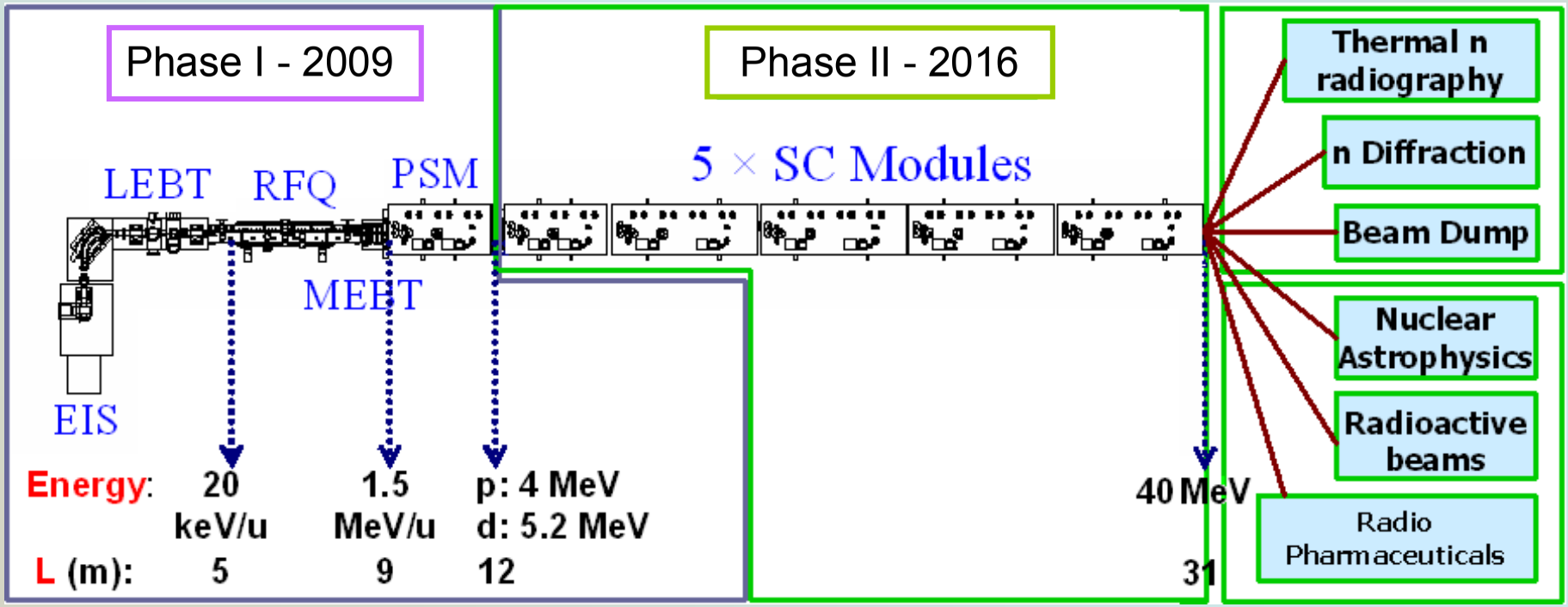

SARAF Accelerator

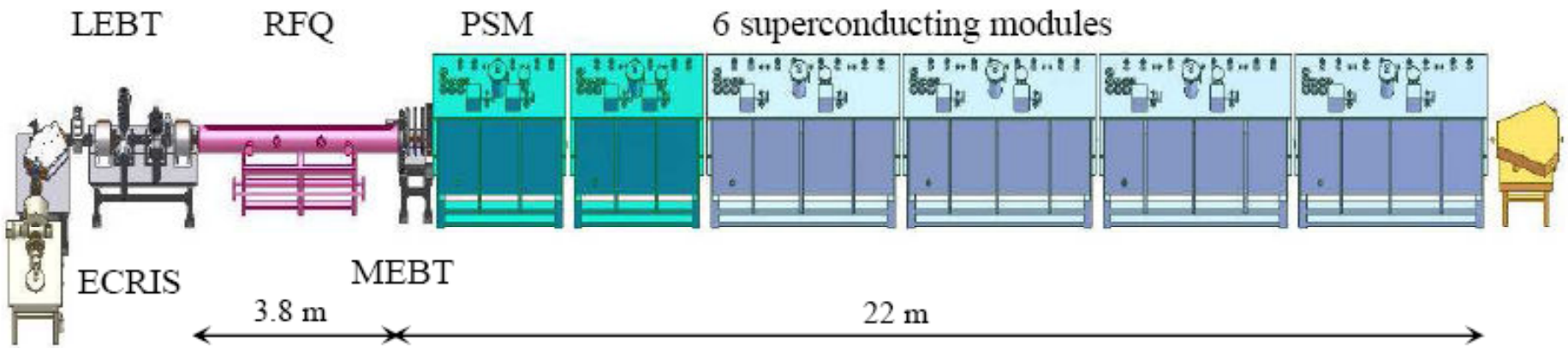

Figure 1: (Color) Schematic diagram of the SARAF accelerator. From left to right: ECRIS, LEBT, RFQ, MEBT and linac. The linac consists of 6 superconducting modules, where each of these modules contains 3 or 4 lattice cells. Each lattice cell consists of a solenoid followed by 2 HWRs.

PSM – Prototype Superconducting Module

SARAF phase I linac – upstream view

A. Nagler, Linac-2006
C. Piel, EPAC-2008
A. Nagler, Linac-2008
I. Mardor, PAC-2009
L. Weissman, Linac 2010

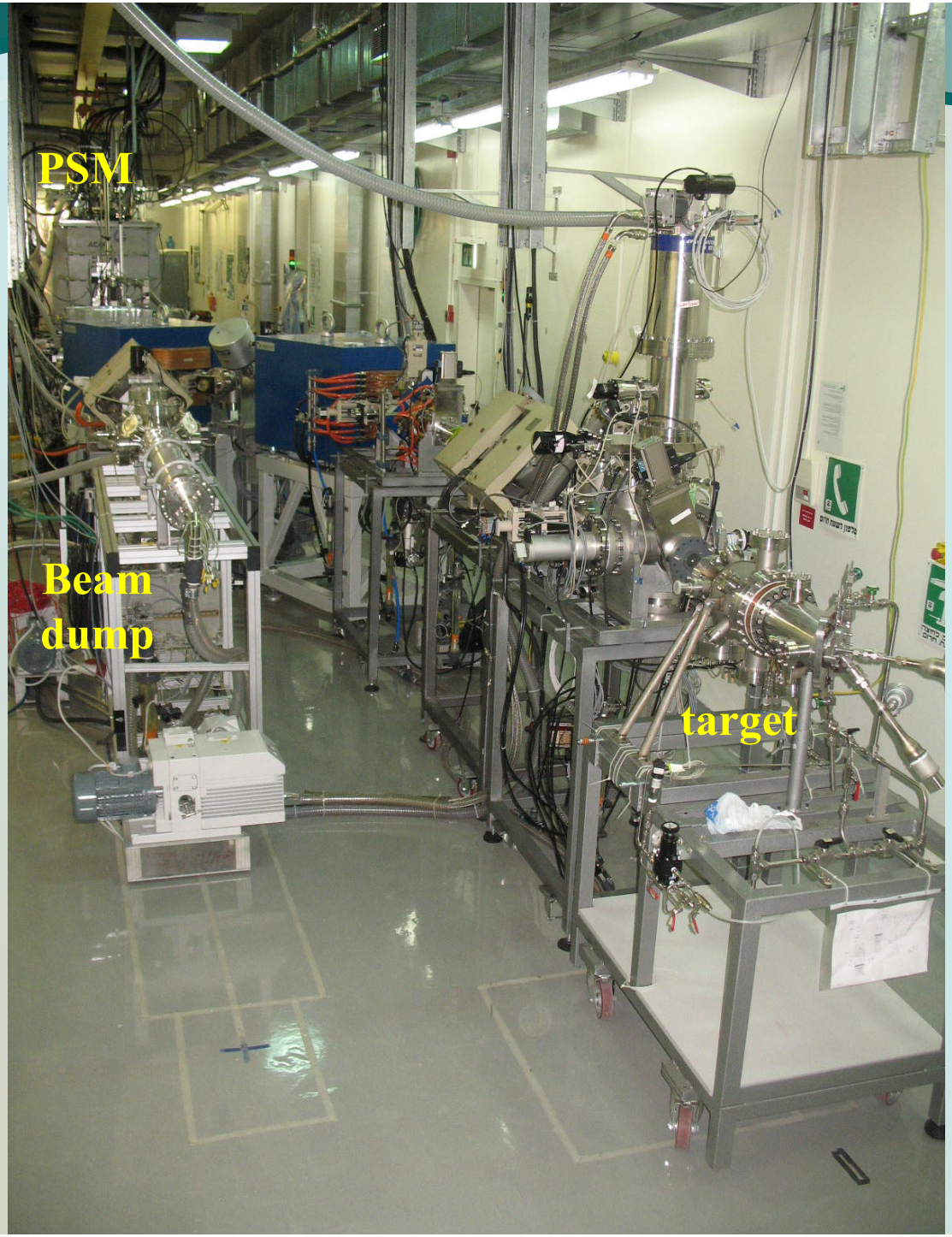

Beam lines downstream the linac

ECR Ion Source (ECRIS)

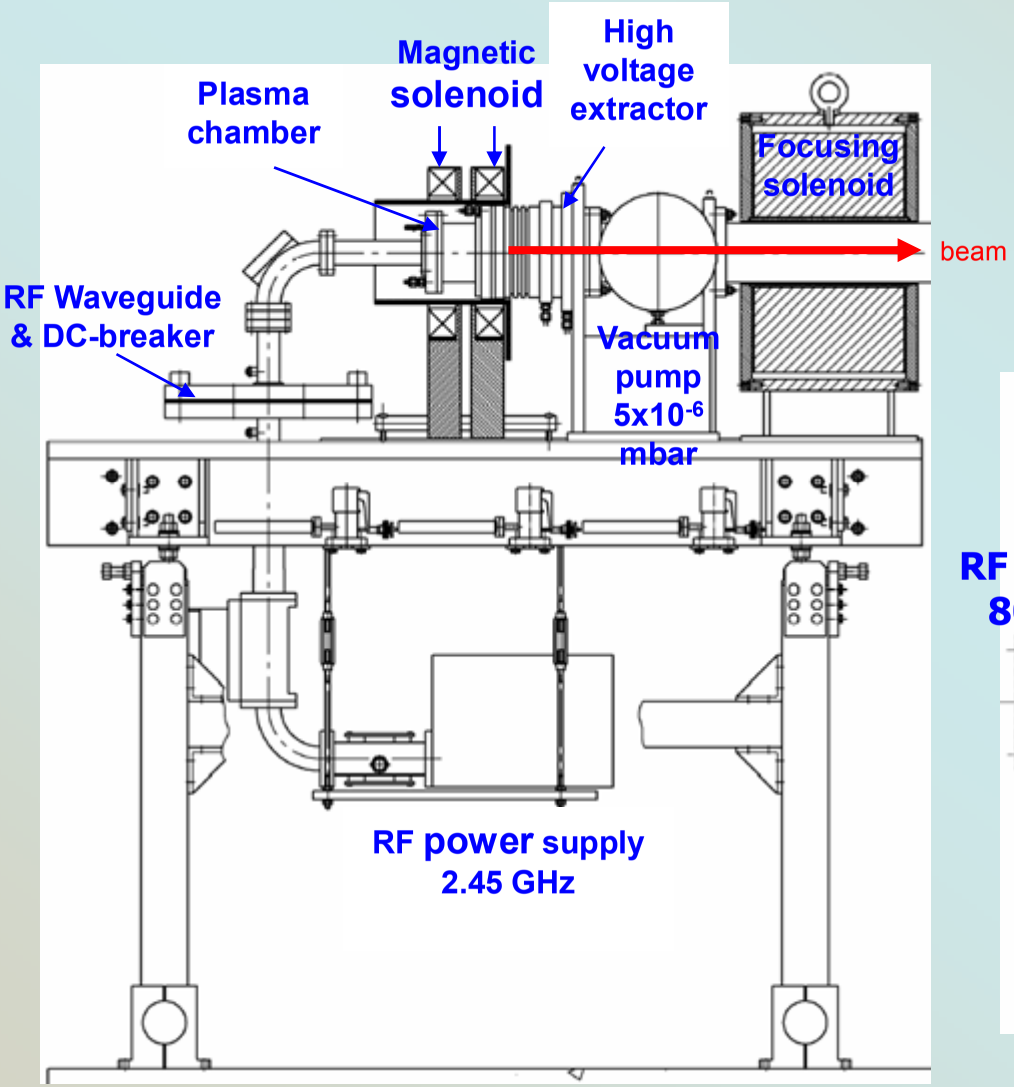

C. Piel EPAC 2006

F. Kremer ICIS 2007

K. Dunkel PAC 2007

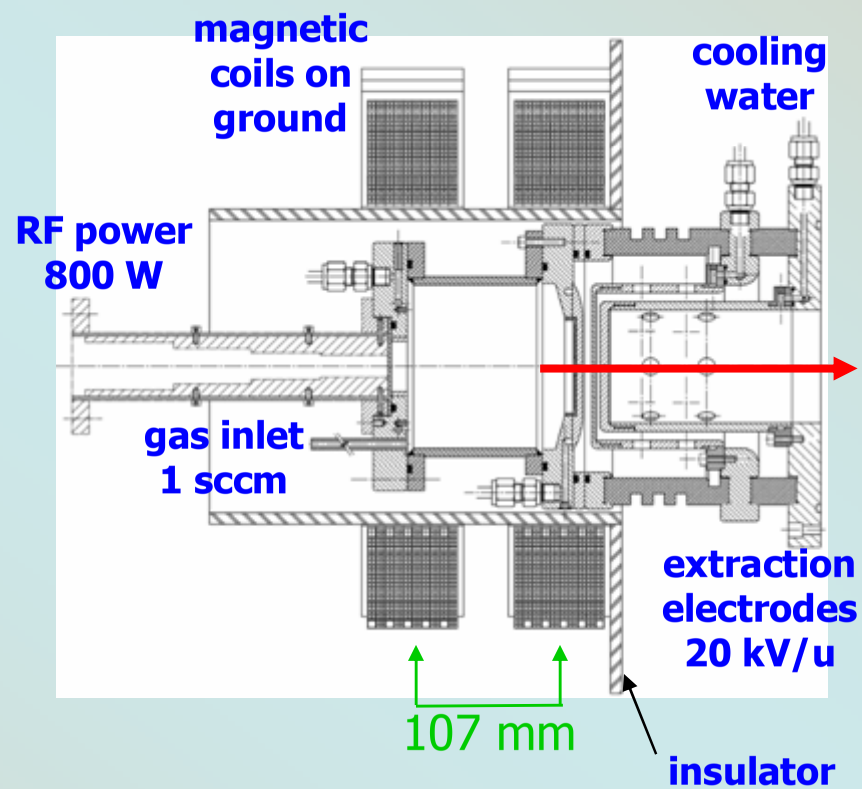

LEBT – emittance measurement

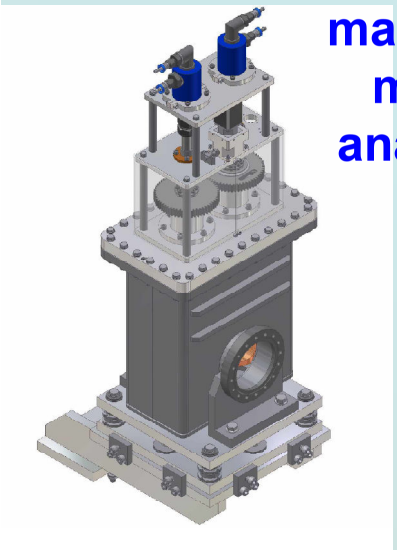

magnetic mass analyzer

aperture

ECR

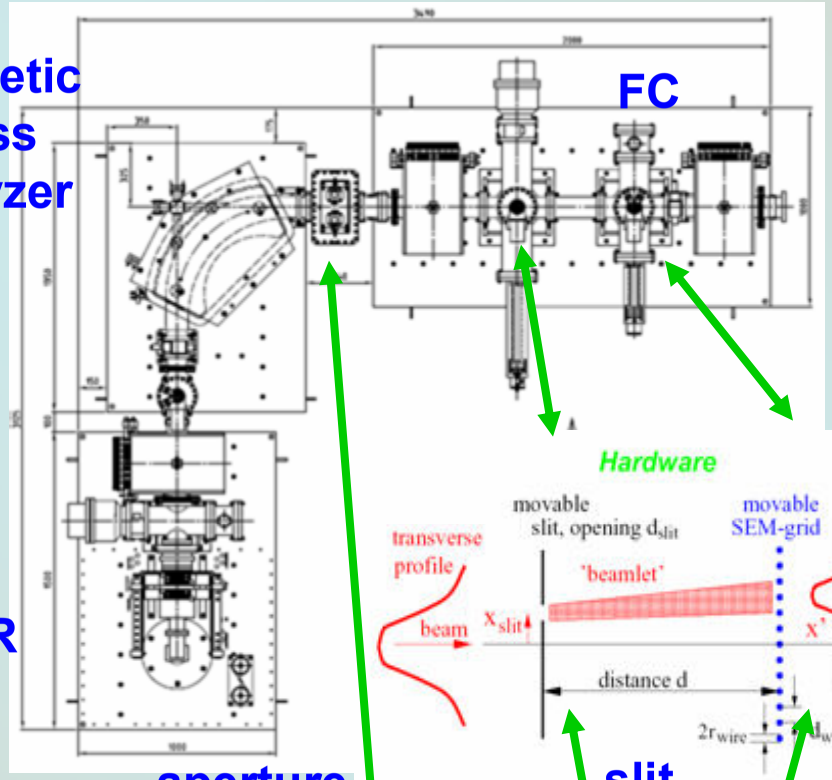

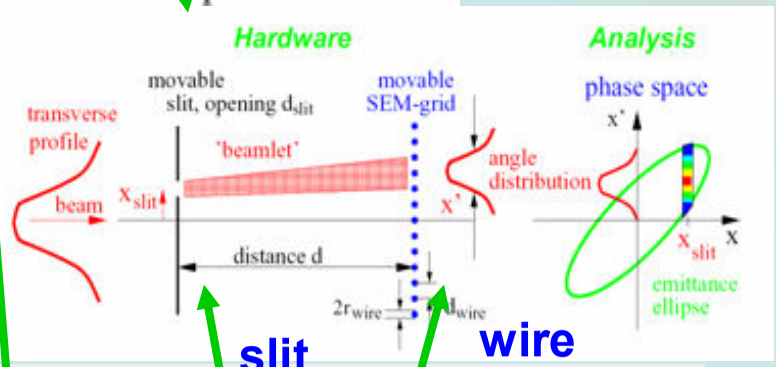

C. Piel EPAC 2006

F. Kremer ICIS 2007

K. Dunkel PAC 2007

P. Forck JUAS 2003

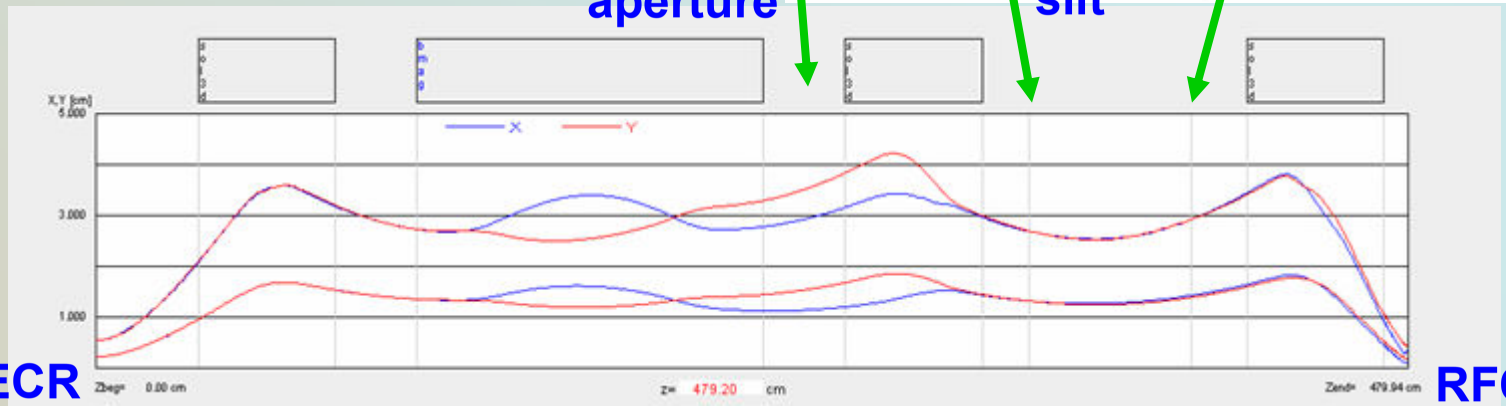

5 mA proton beam optics

ECR

RFQ entrance

EIS: measured emittance values

EIS has been in routine operation since 2006

$\varepsilon_{rms_norm._100\%}$ [π mm mrad]

Particles Beam current	Protons X / Y	H_2^+ X / Y	Deuterons X / Y
5.0 mA	**0.20 / 0.17**	**0.34 / 0.36**	**0.13 / 0.12**
2.0 mA	**0.13 / 0.13**	**0.30 / 0.34**	**0.14 / 0.13**
0.04 mA	**0.18 / 0.19**		**0.05 / 0.05**

Specified value = 0.2 / 0.2 [π mm mrad]

- H_2^+ planned for mimicking deuterons
- Results due to non-optimized ECR and molecular breakup

deuterons emittance results

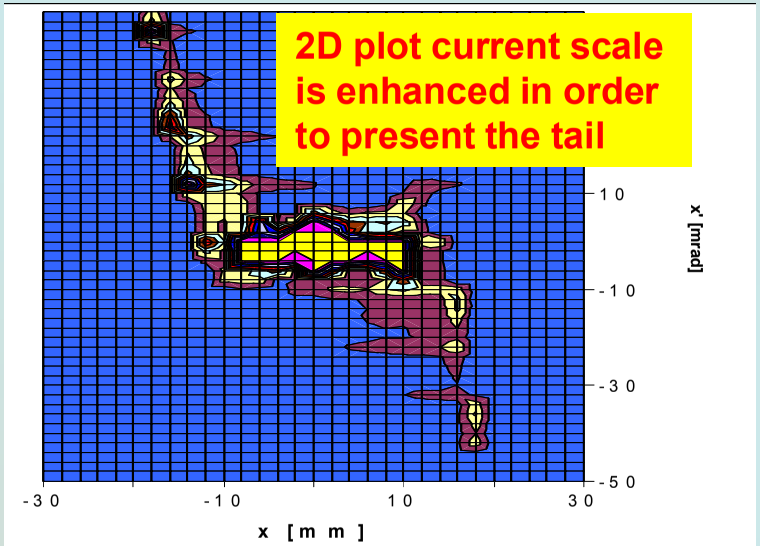

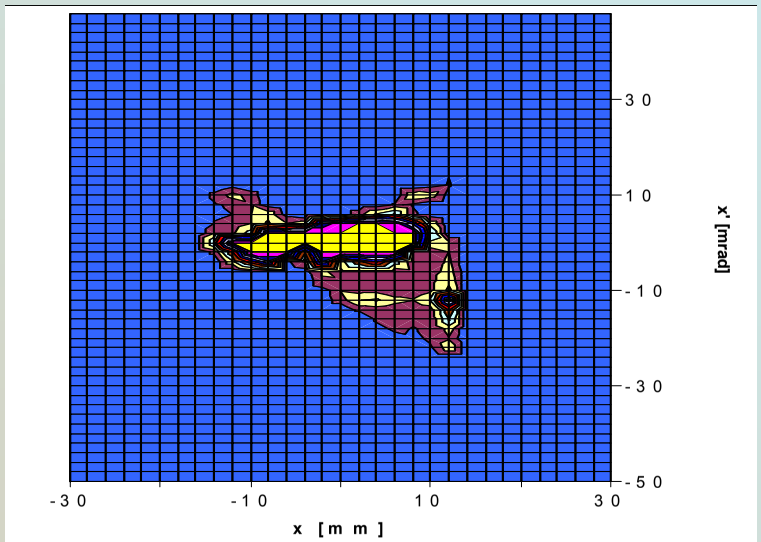

π mm mrad

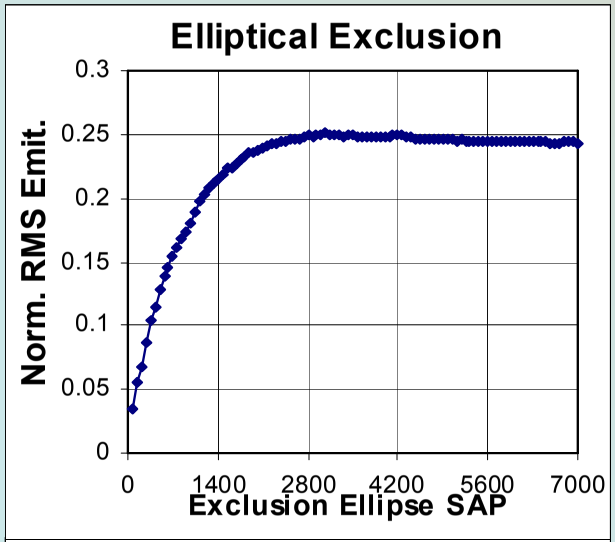

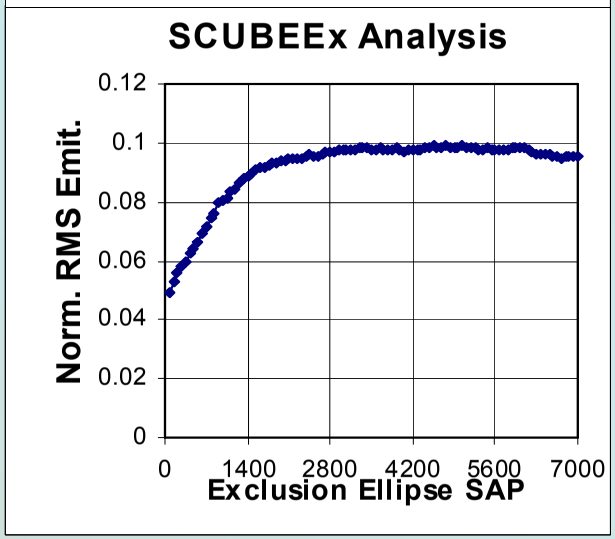

deuterons

6.1 mA open aperture

B. Bazak JINST 2008

aperture cut to 5.0 mA

emittance analysis with the SCUBEEx code by M. P. Stockli and R.F. Welton, Rev. Sci. Instr. 75 (2004) 1646

LEBT – emittance measurement

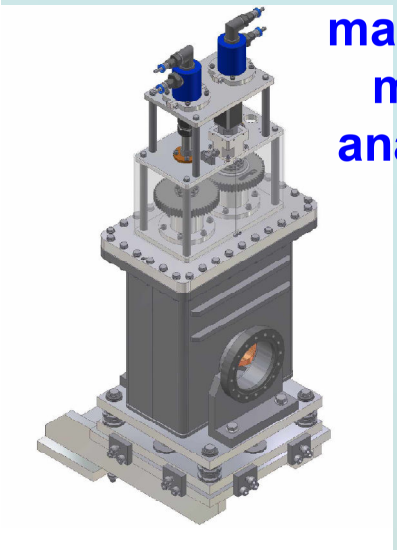

magnetic mass analyzer

aperture

ECR

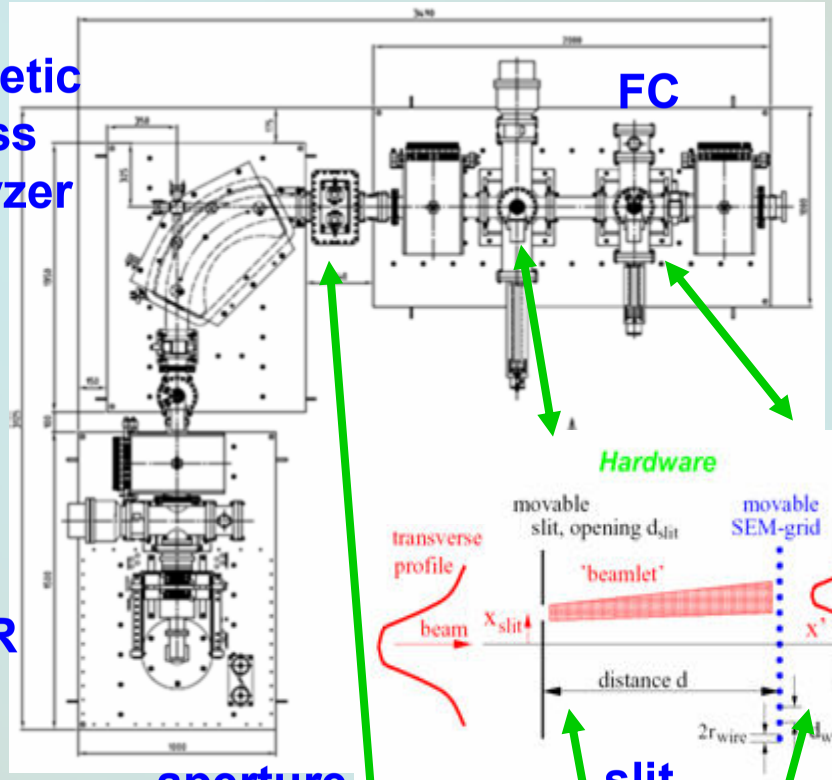

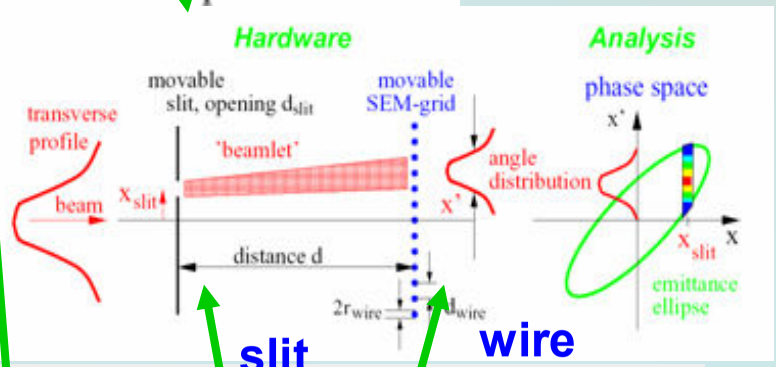

C. Piel EPAC 2006

F. Kremer ICIS 2007

K. Dunkel PAC 2007

P. Forck JUAS 2003

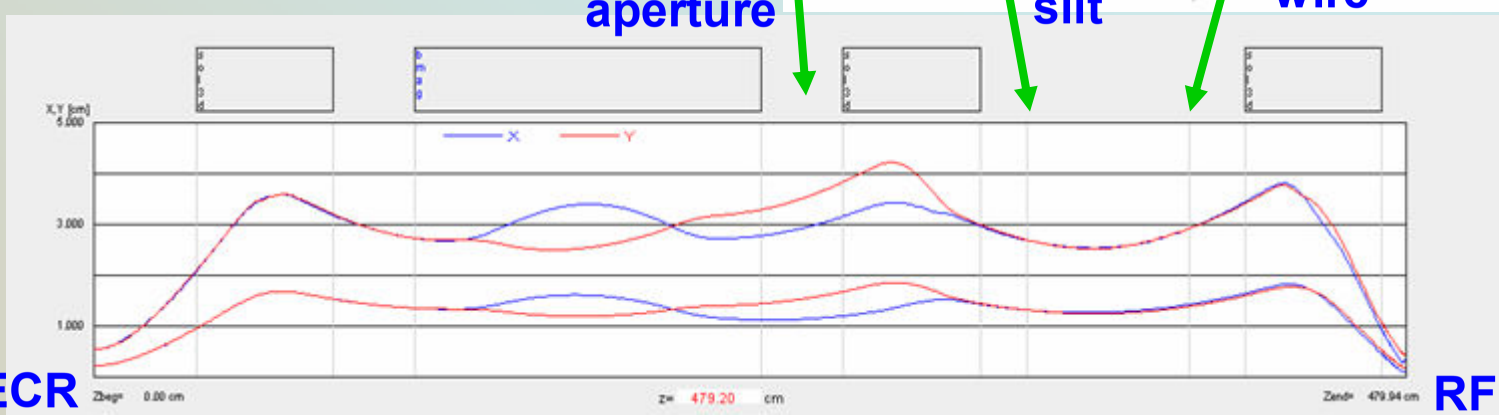

5 mA proton beam optics

ECR

RFQ entrance

Use neutrals for tune LEBT

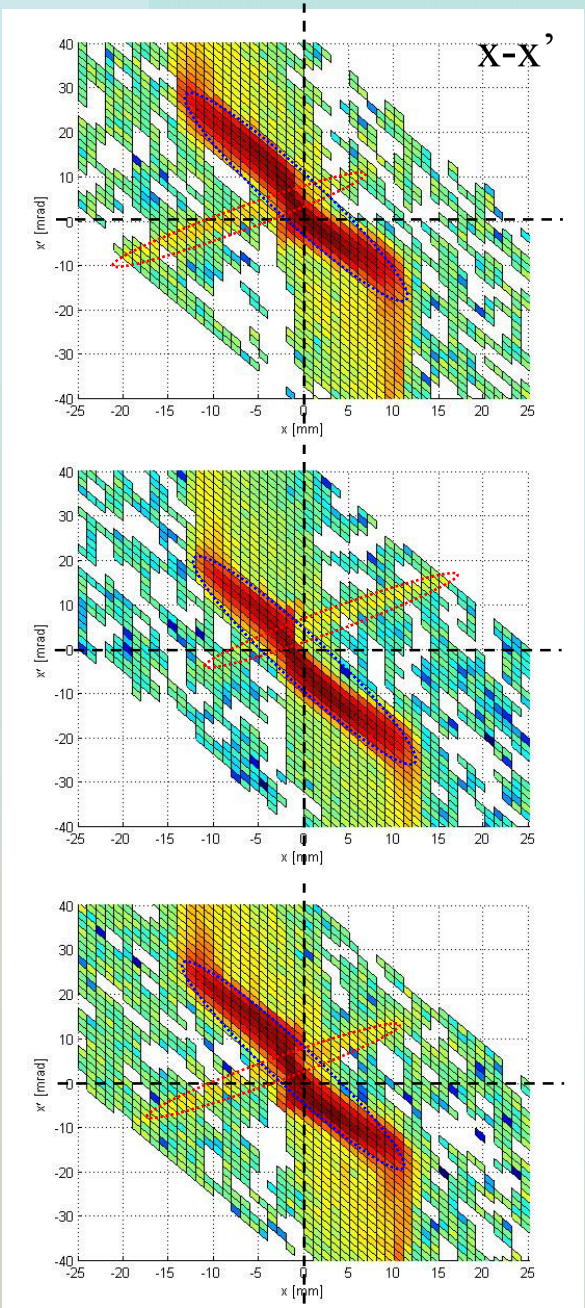

I_{dipole}=38.65 A

I_{dipole}=38.95 A

I_{dipole}=38.80 A

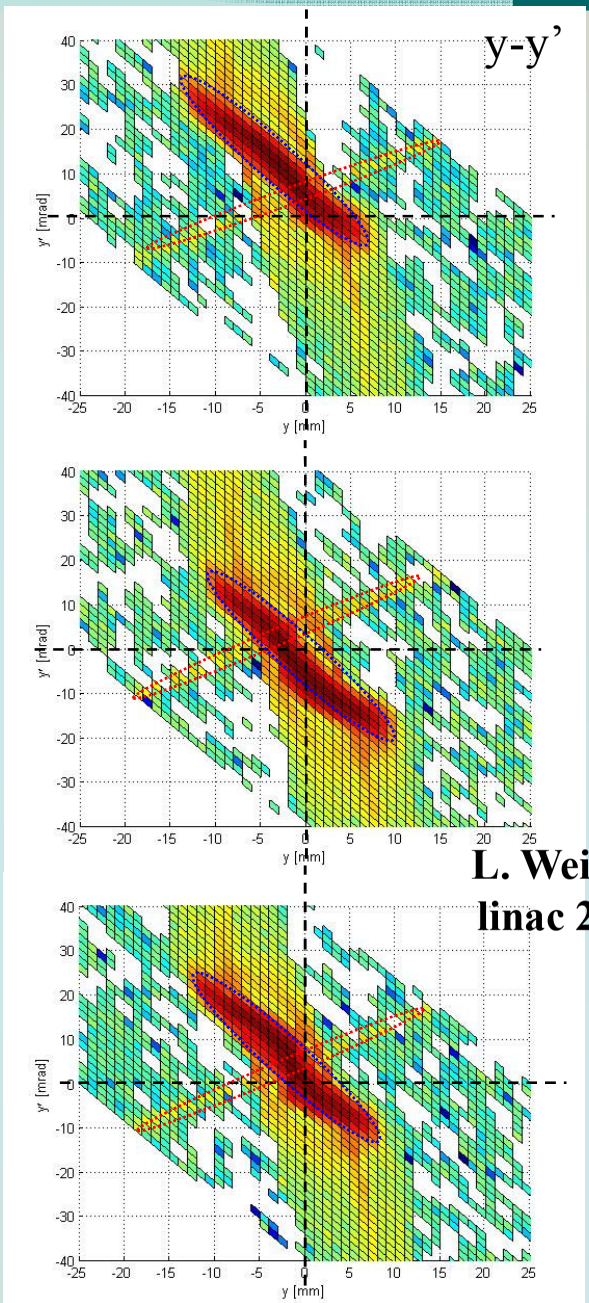

L. Weissman et al.
linac 2010 TUP74

176 MHz Radio Frequency Quadrupole

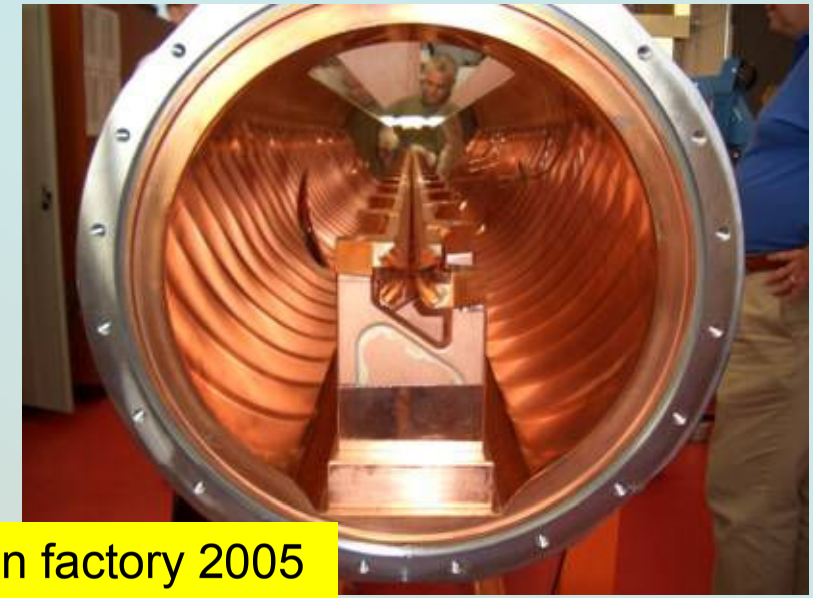

In factory 2005

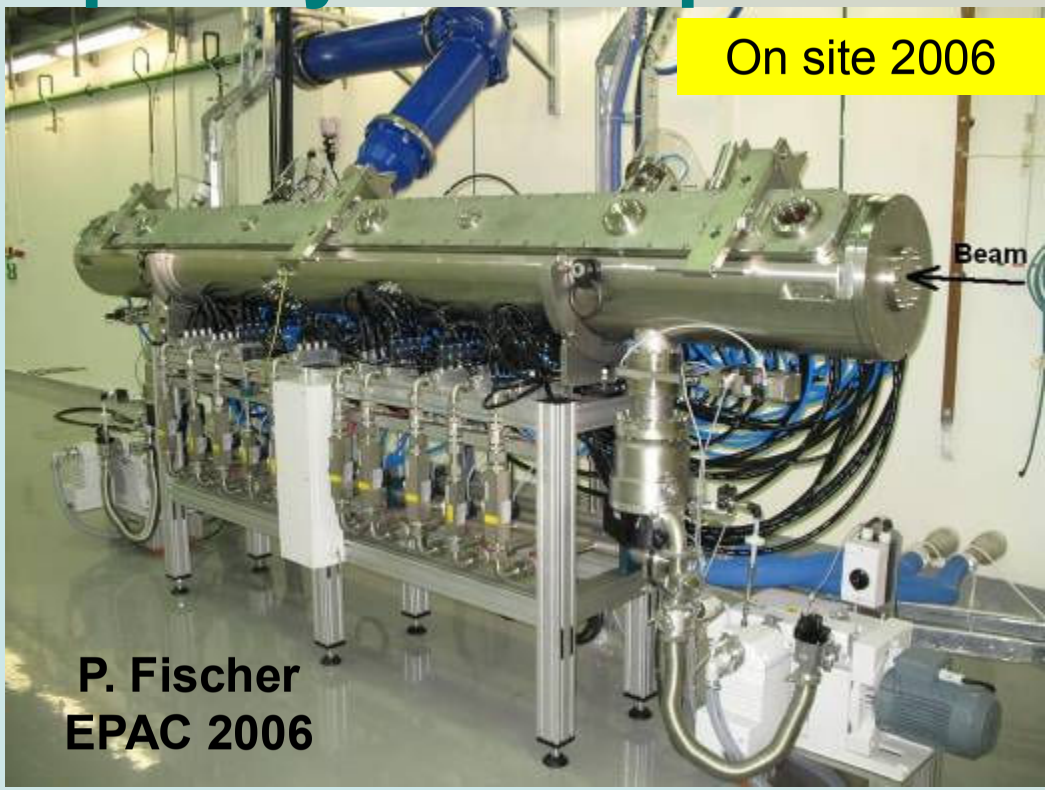

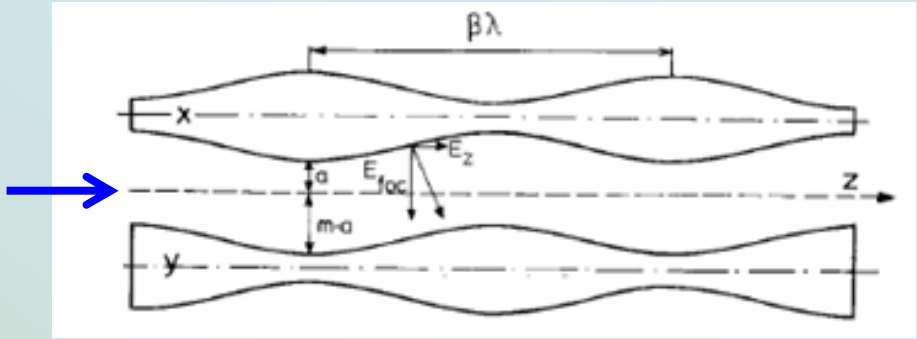

RFQ power gain vs. forward power

RFQ voltage squared as a function of RFQ input power

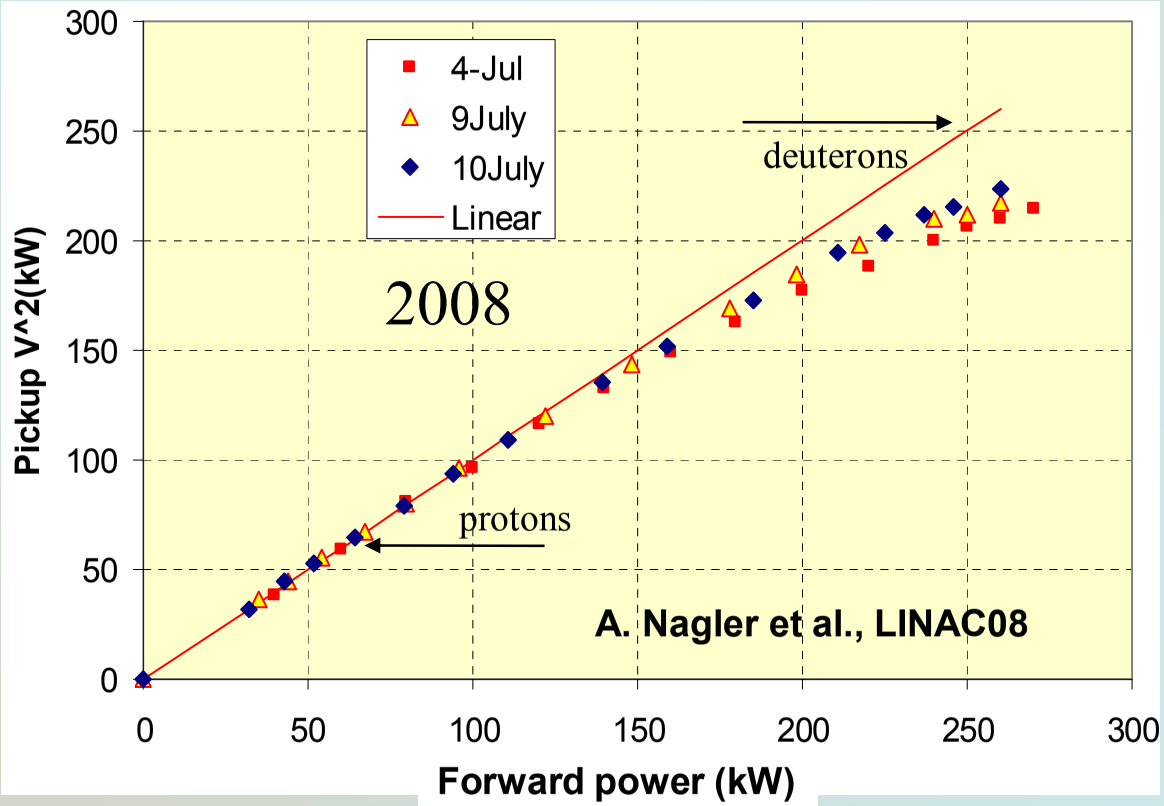

For 3 MeV Deuterons:
65 kV @ 176 MHz
1.6 Kilpatrick
~ 255 kW CW w/o beam
65 kW/m

Input Power [kW]	Duration [hrs]
190 (CW)	12
210 (CW)	2
240 (CW)	0.5
260 (DC = 80% @ 440 Hz)	0.5

- Parting from the linear relation indicates onset of dark current due to poor conditioning
- All 4 RFQ pickups showed similar results

Discharge between the rods and stems

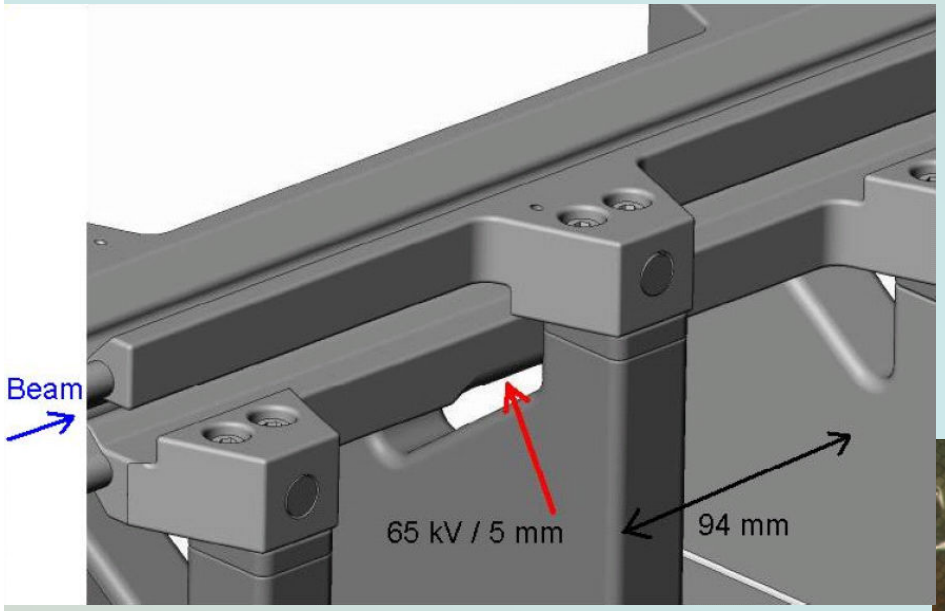

Non-linearity of voltage response,
High x-ray background

Discharge between the back rods and the stems supporting neighboring rods

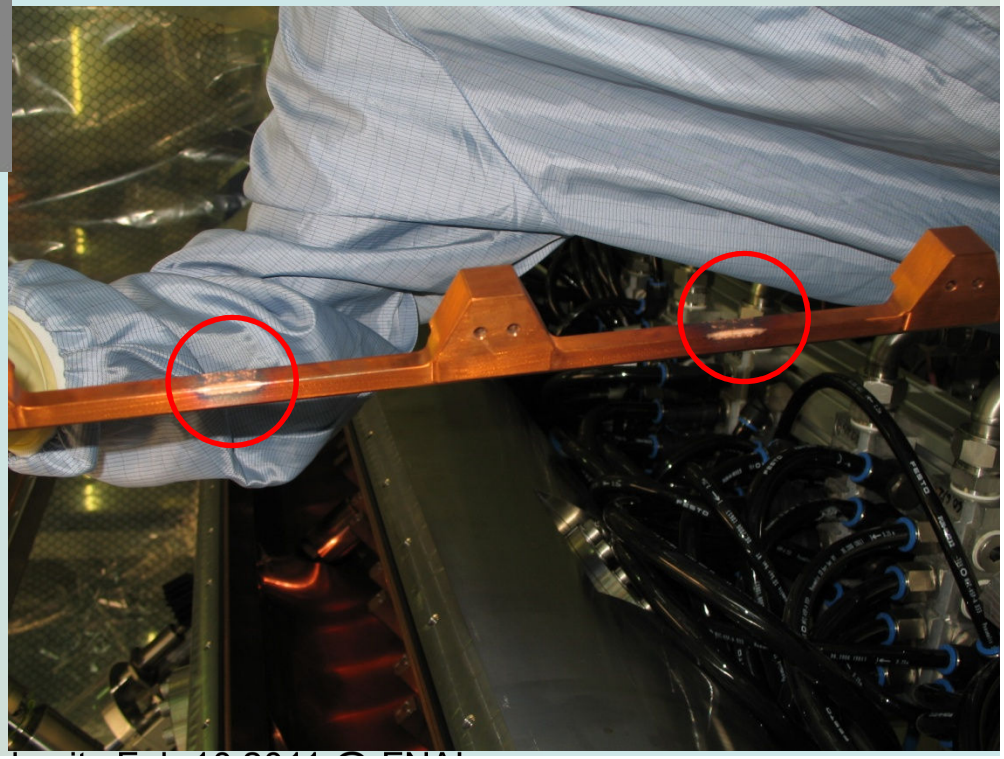

In spring 2009 the rods were modified locally to reduce the parasitic fields.

This solved the problem of discharge.

I. Mardor, PAC 2009
L. Weissman, Linac 2010
J. Rodnizki, Linac 2010

Burning of tuning blocks

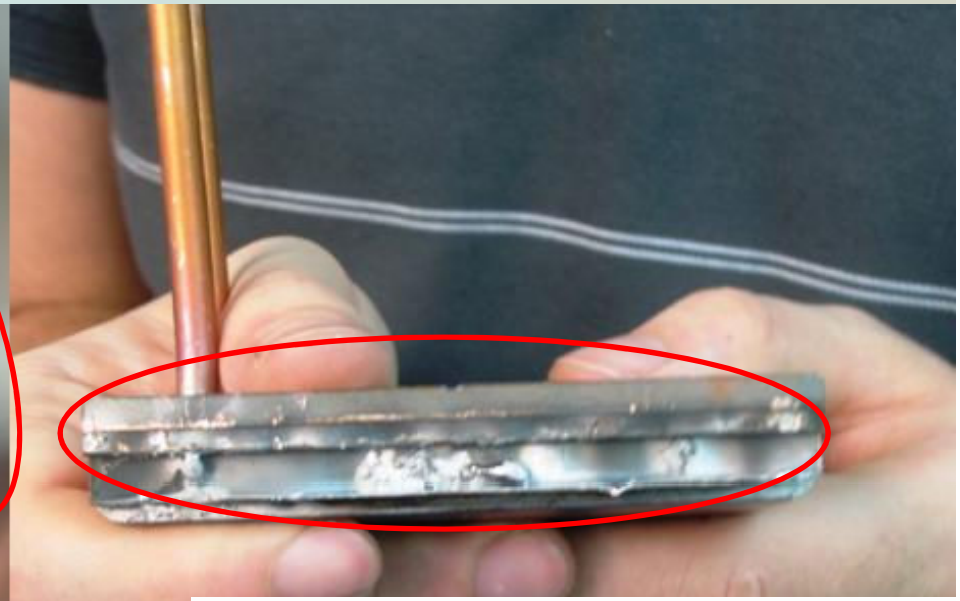

Contact springs of tuning blocks were burned twice

New design :

- **massive silver plate for better current and thermal conductivity,**
- **mechanical contact with stems by a splint system**

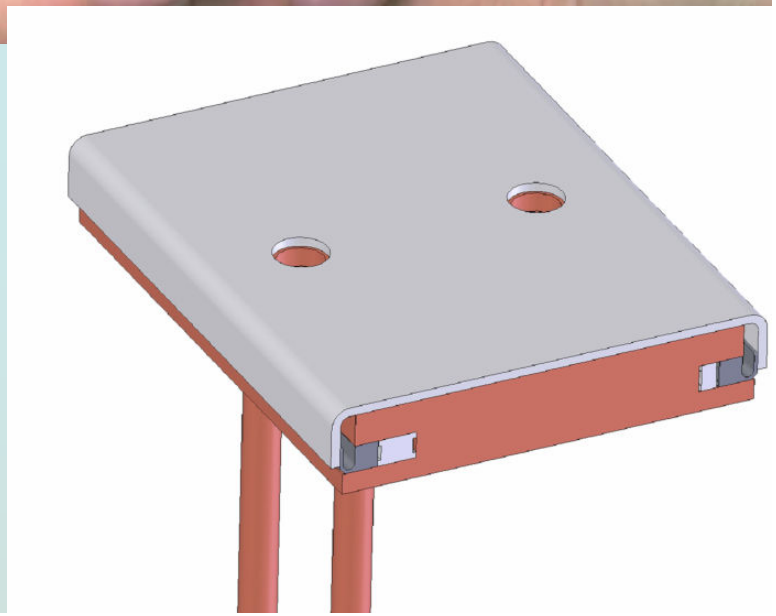

Melting of plunger electrode

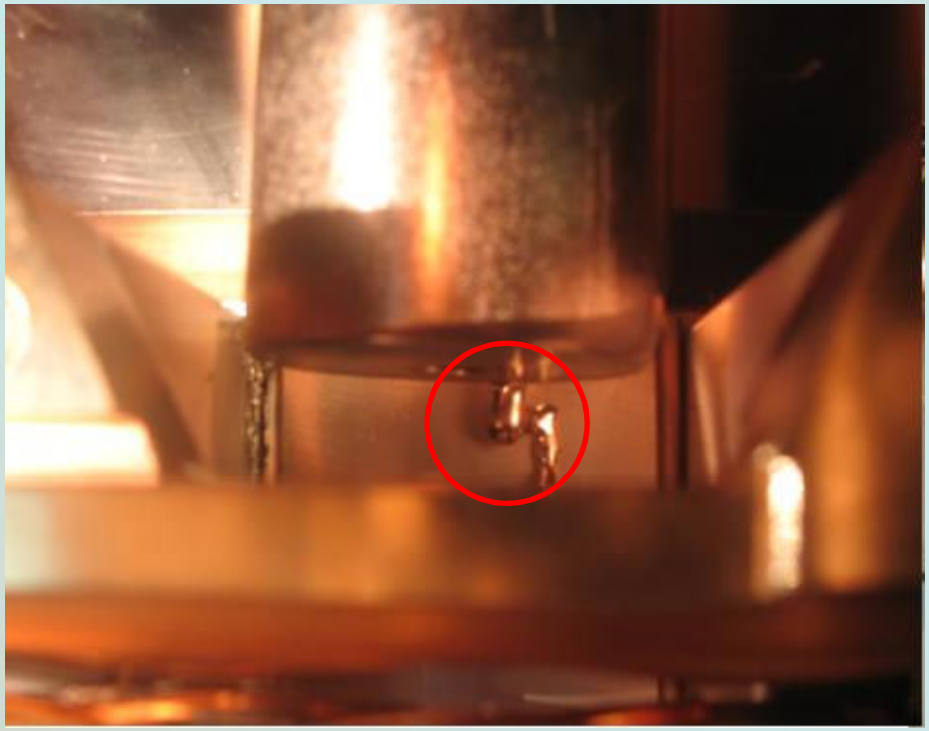

The low-energy plunger electrode has been melted.

J. Rodnizki et al., Linac 2010, TUP095

It was verified that this was not due to a resonance phenomenon.

New design:

plunger was reduced by size (twice less thermal load),

cooling capacity was improved (the plunger and cooling shaft made from one block)

Another RFQ hot spots

A fan was install in front of the coupler

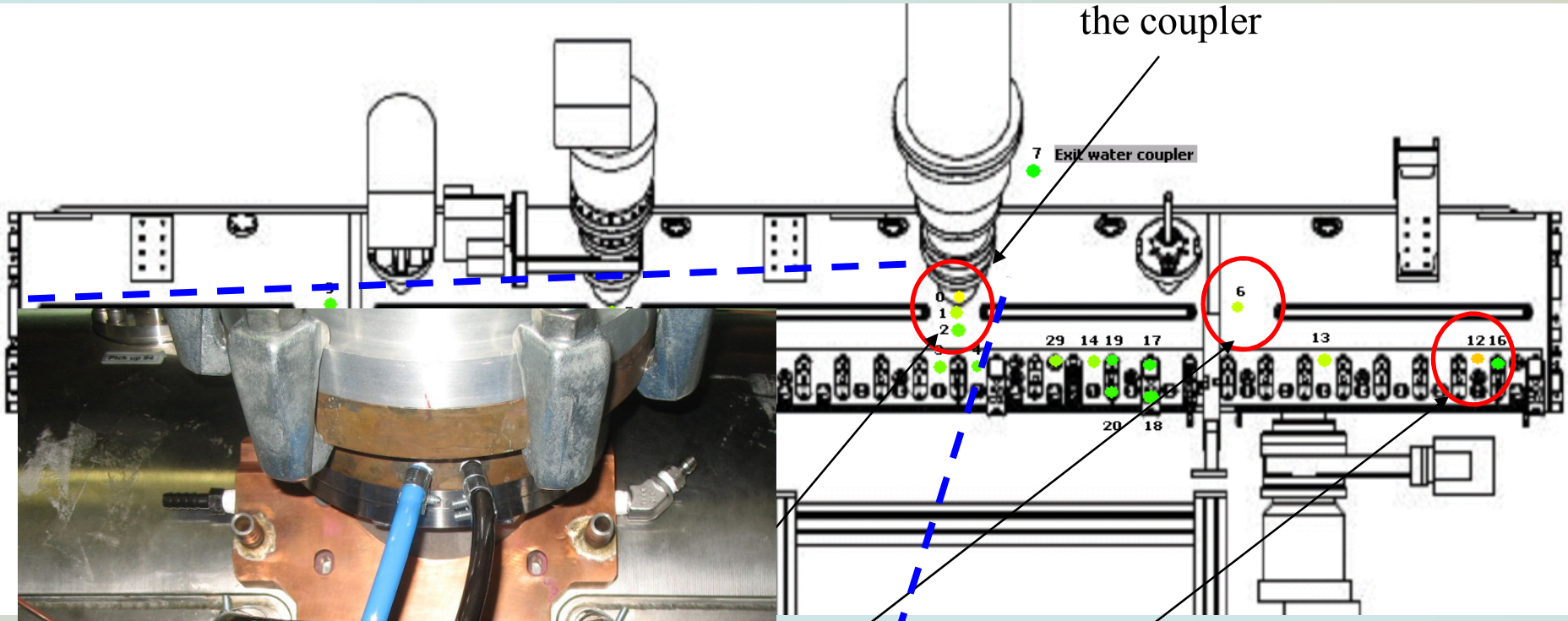

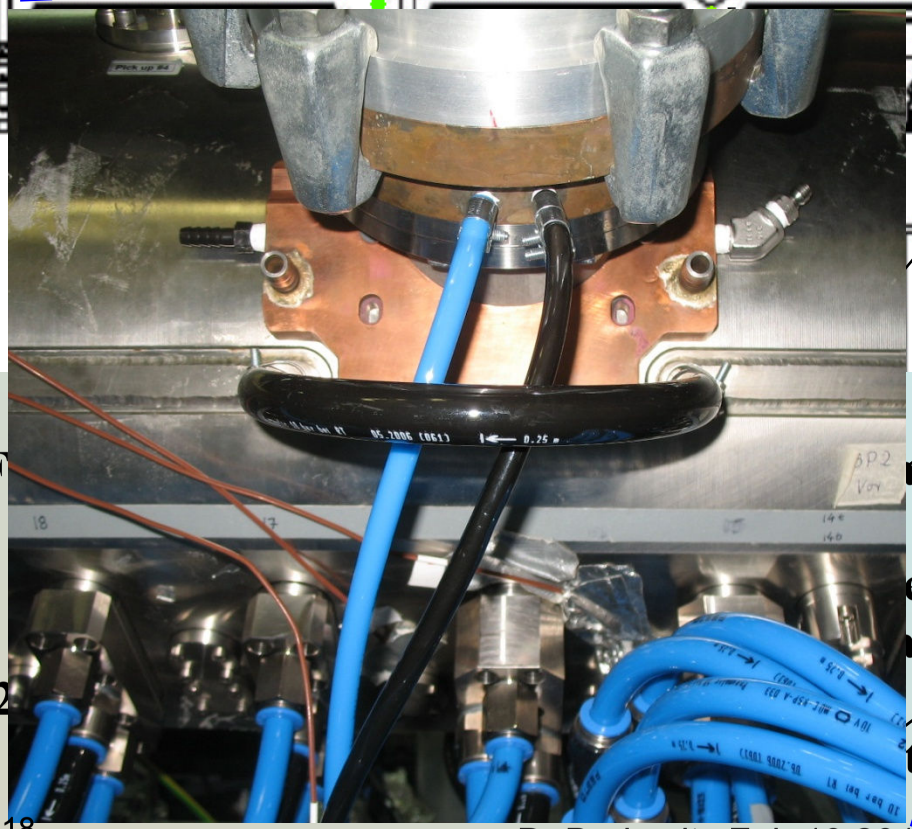

F dditional problematic regions:

especially in the vicinity of the coupler
tion, external cooling blocks were installed

2

tudied

J. Rodnizki et al., Linac 2010, TUP095

Setup for RFQ characterization

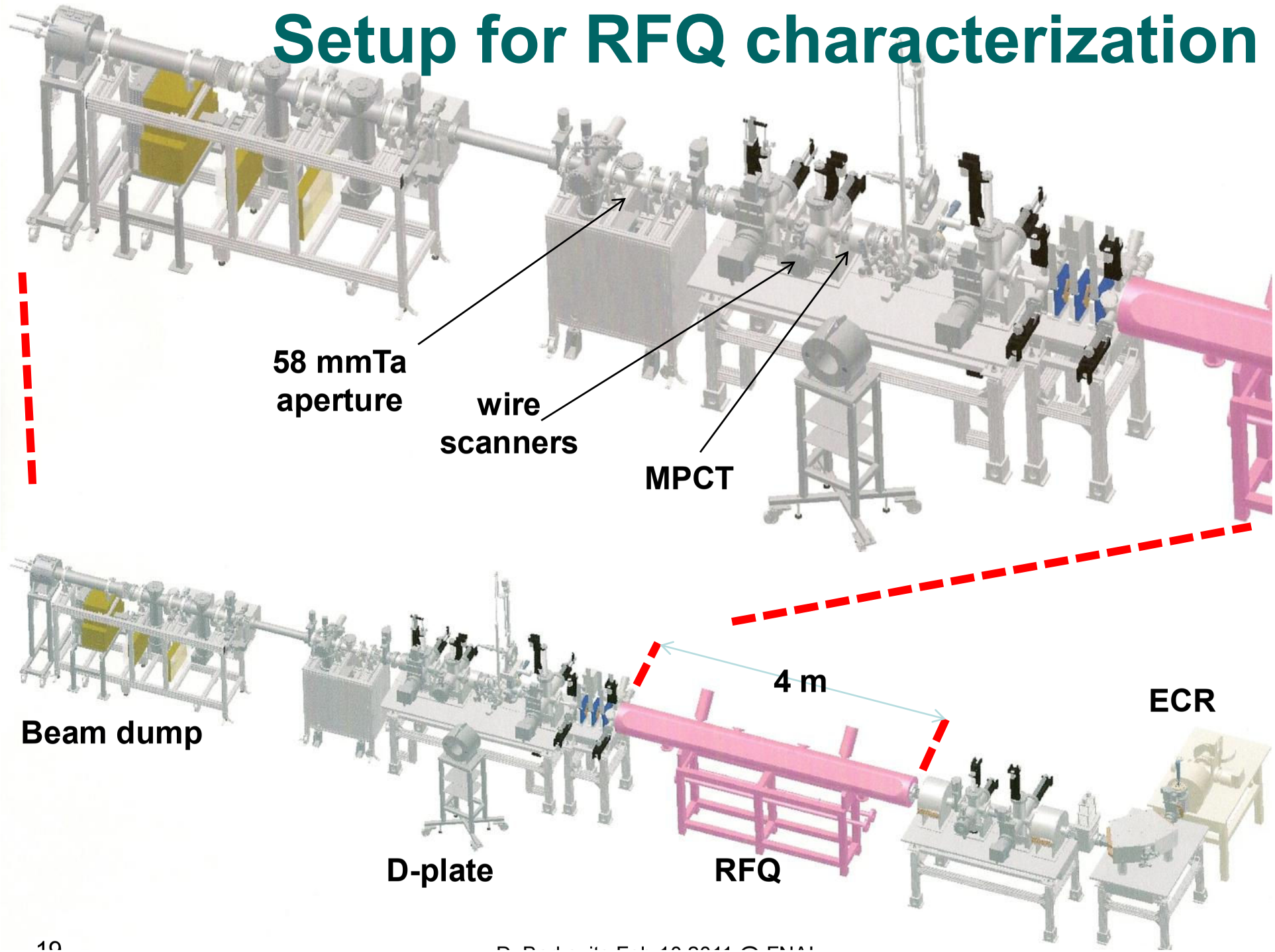

Proton energy at RFQ exit by TOF

Beam Energy Measurement using TOF between 2 BPMs sum signals, 145 mm apart,

E = 1.504 ± 0.012 MeV

C. Piel PAC 2007

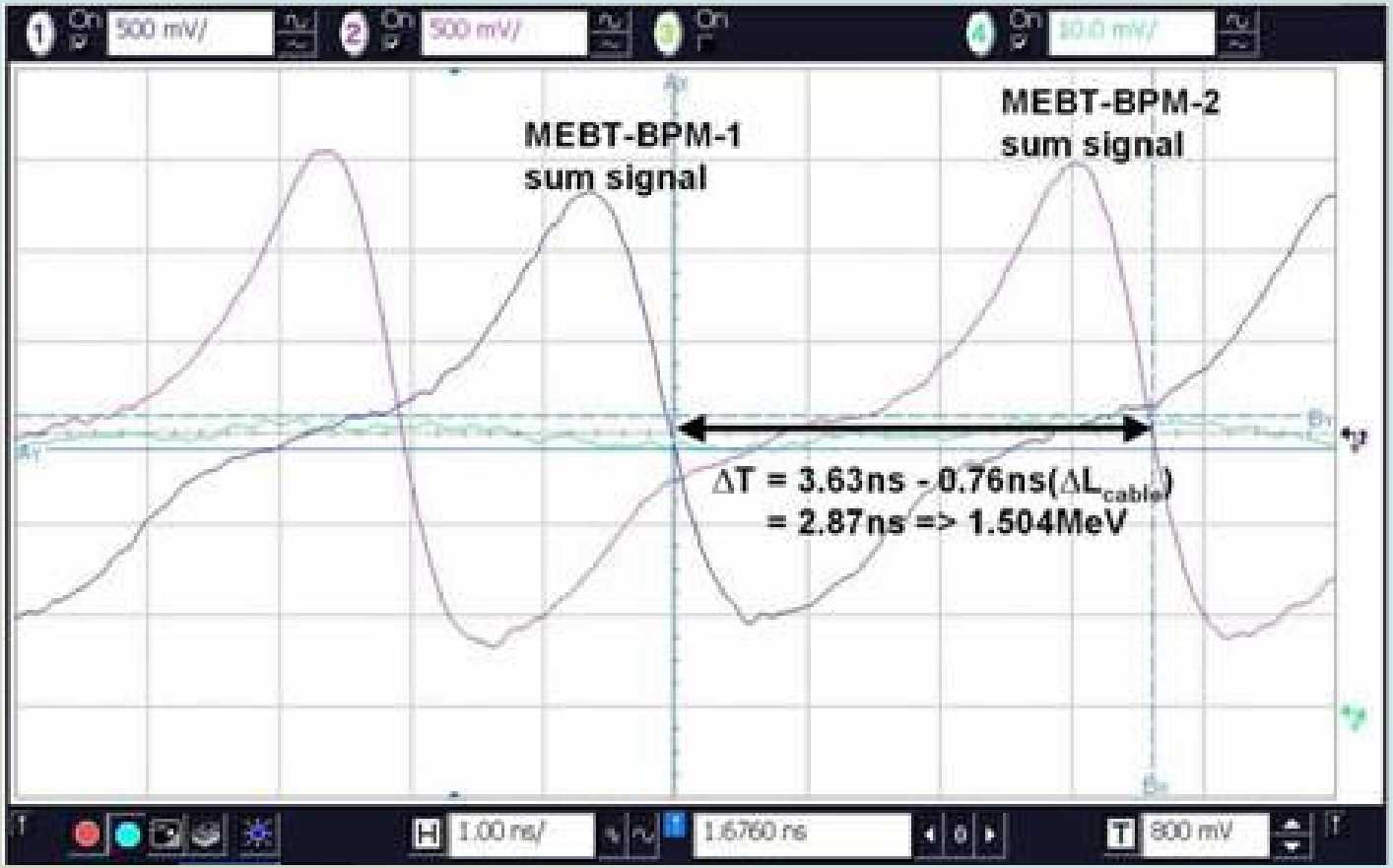

Button pickup for 2 mA pulse and 15 mm bore radius gives a signal high above noise.

Bunch width measured at β=0.056 is larger than the predicted value due to the induced charge broadening.

Approximated rms ε_z extracted from protons bunch width measurements

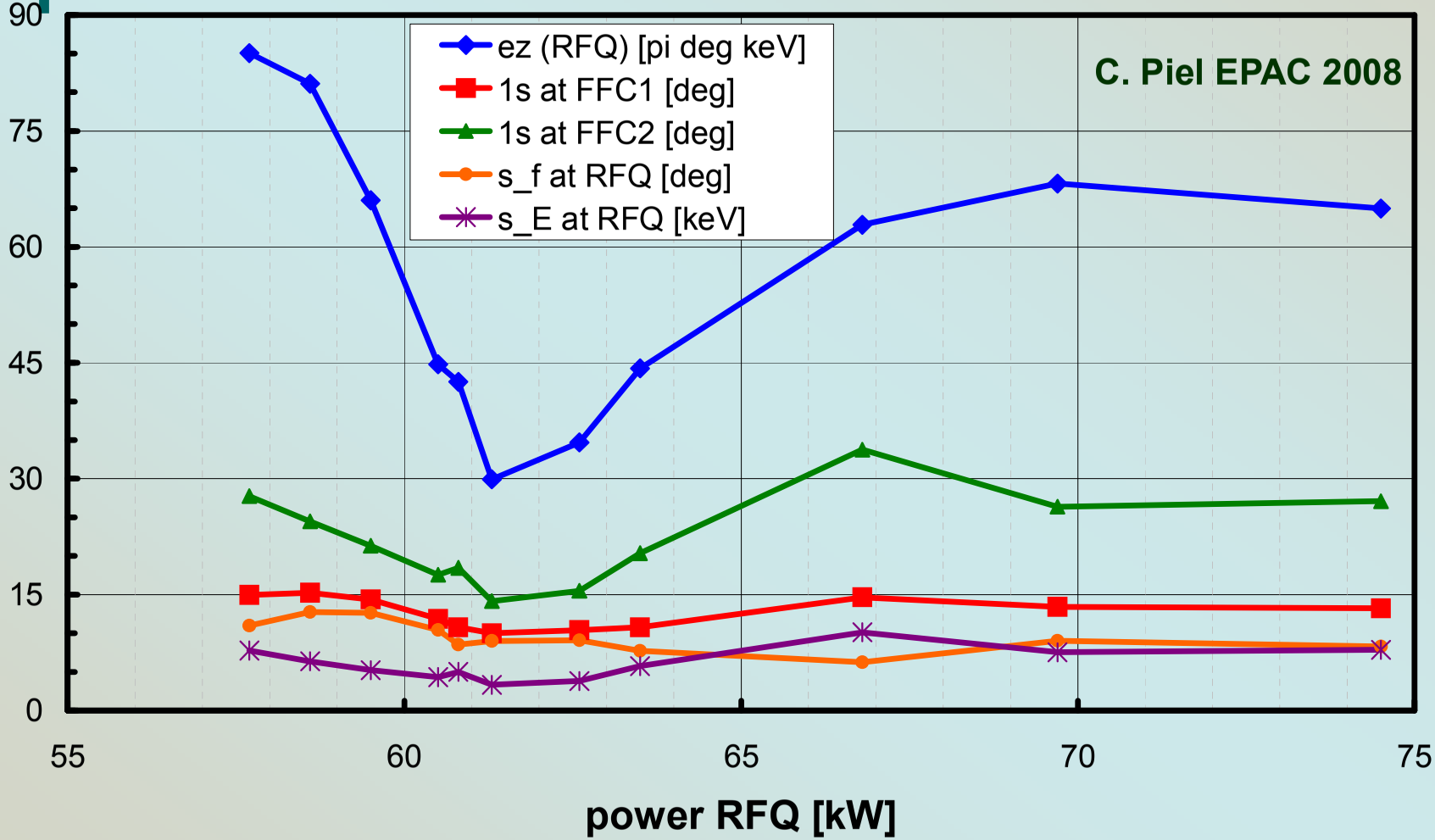

Specified rms ε_z = 120 π deg keV Value for simulations = 74 π deg keV

Protons current downstream RFQ vs. RFQ forward power for 3 mA injection

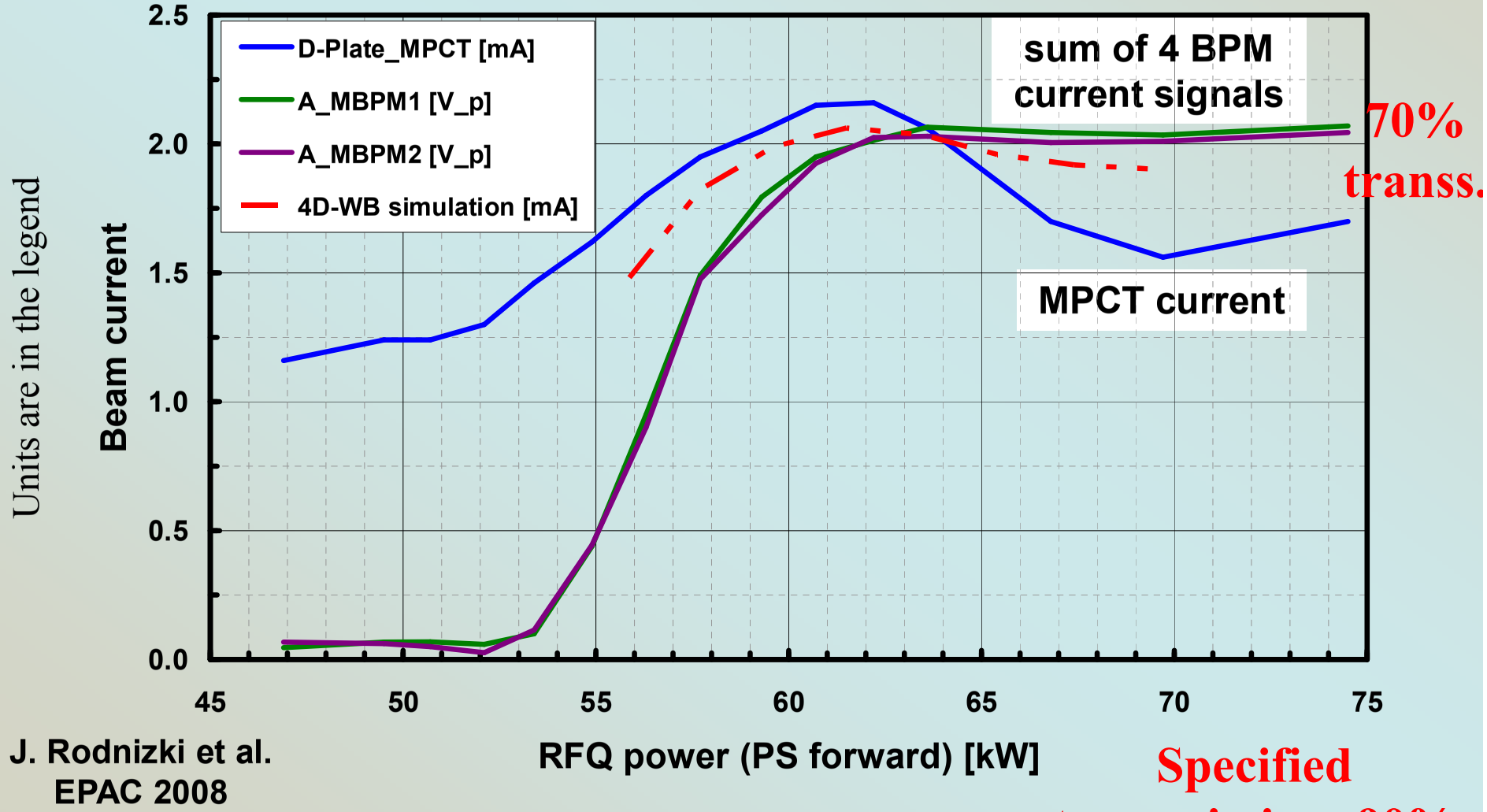

J. Rodnizki et al.
EPAC 2008

Specified transmission=90%

Deuterons beam
(through a detuned PSM)

Specified transmission=90%

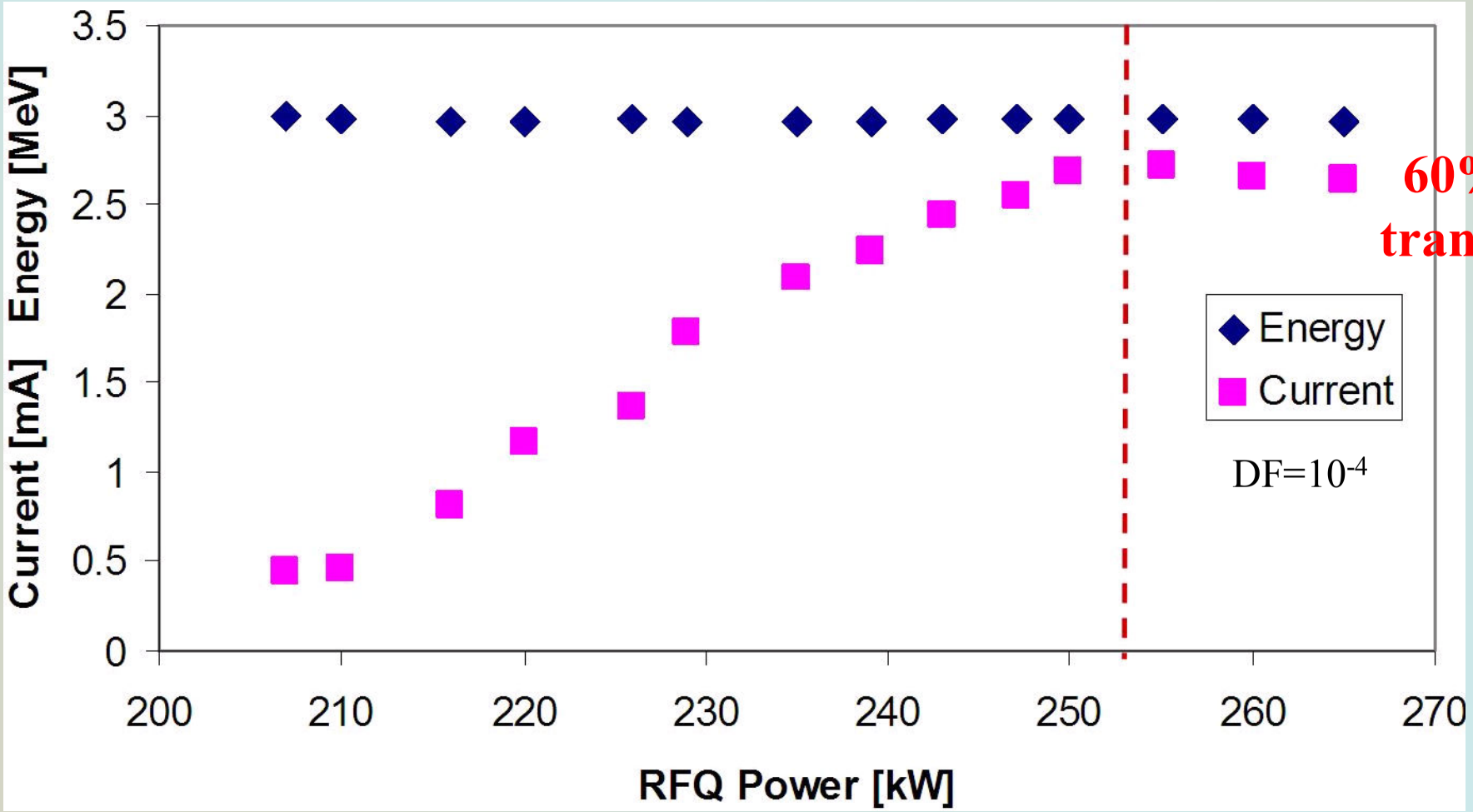

60% transs.

RFQ steering effects

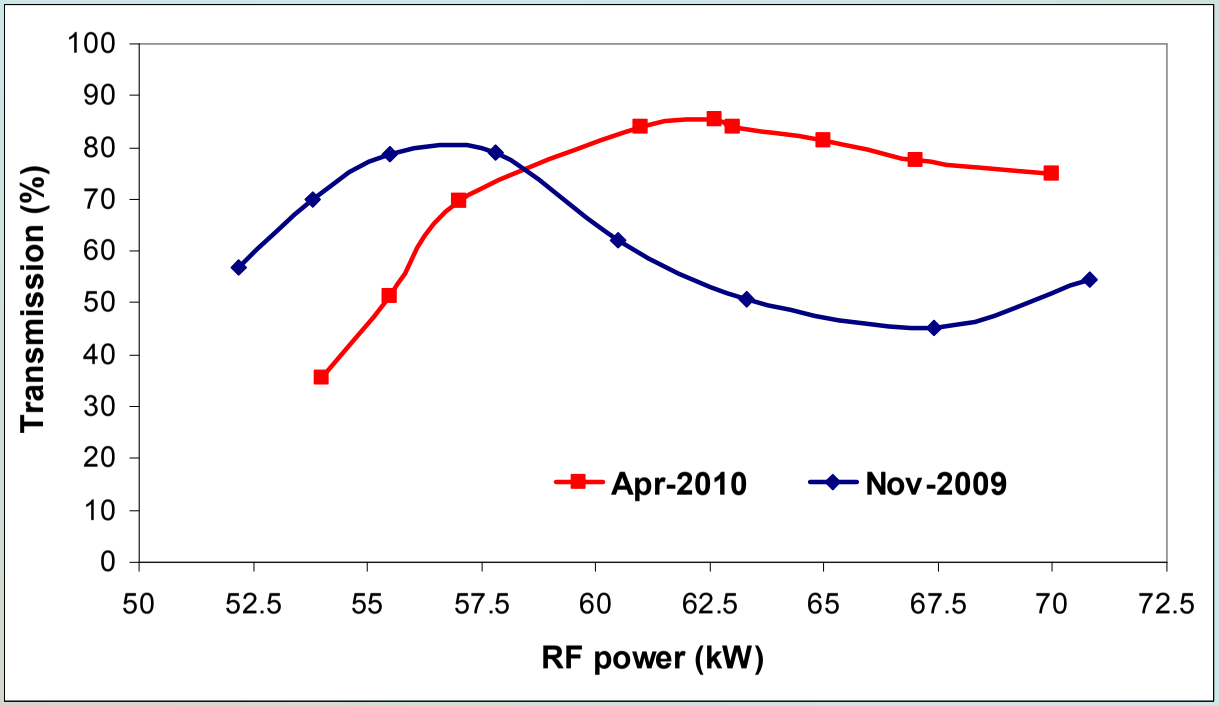

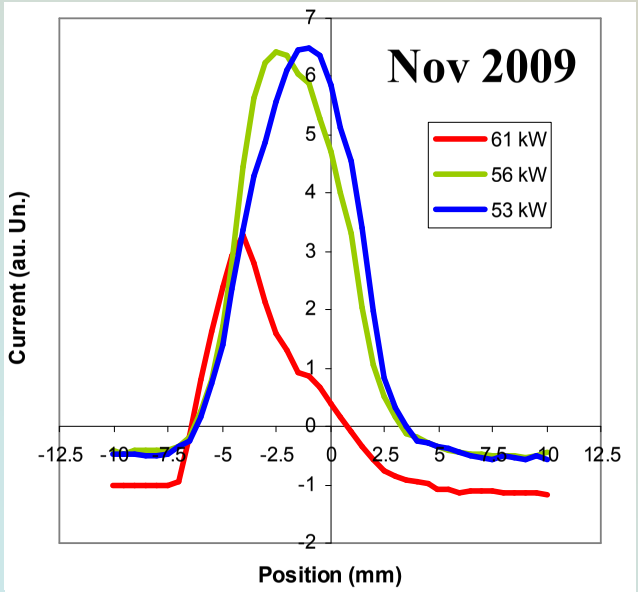

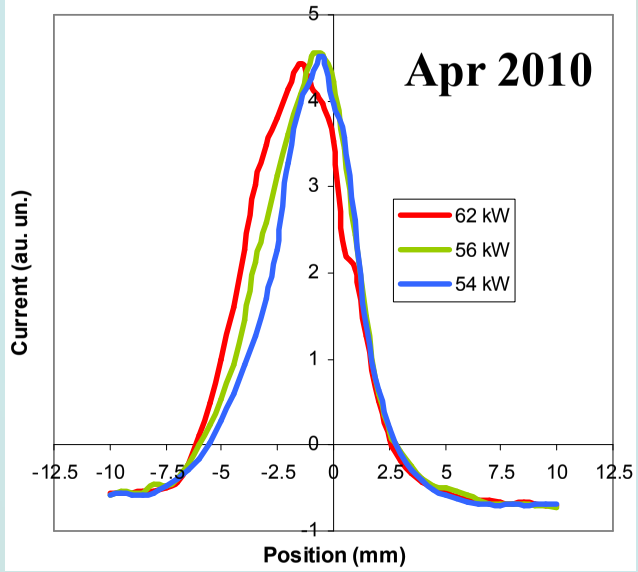

After improving field homogeneity observe much smaller RFQ power effects

Prototype SC Module (PSM)

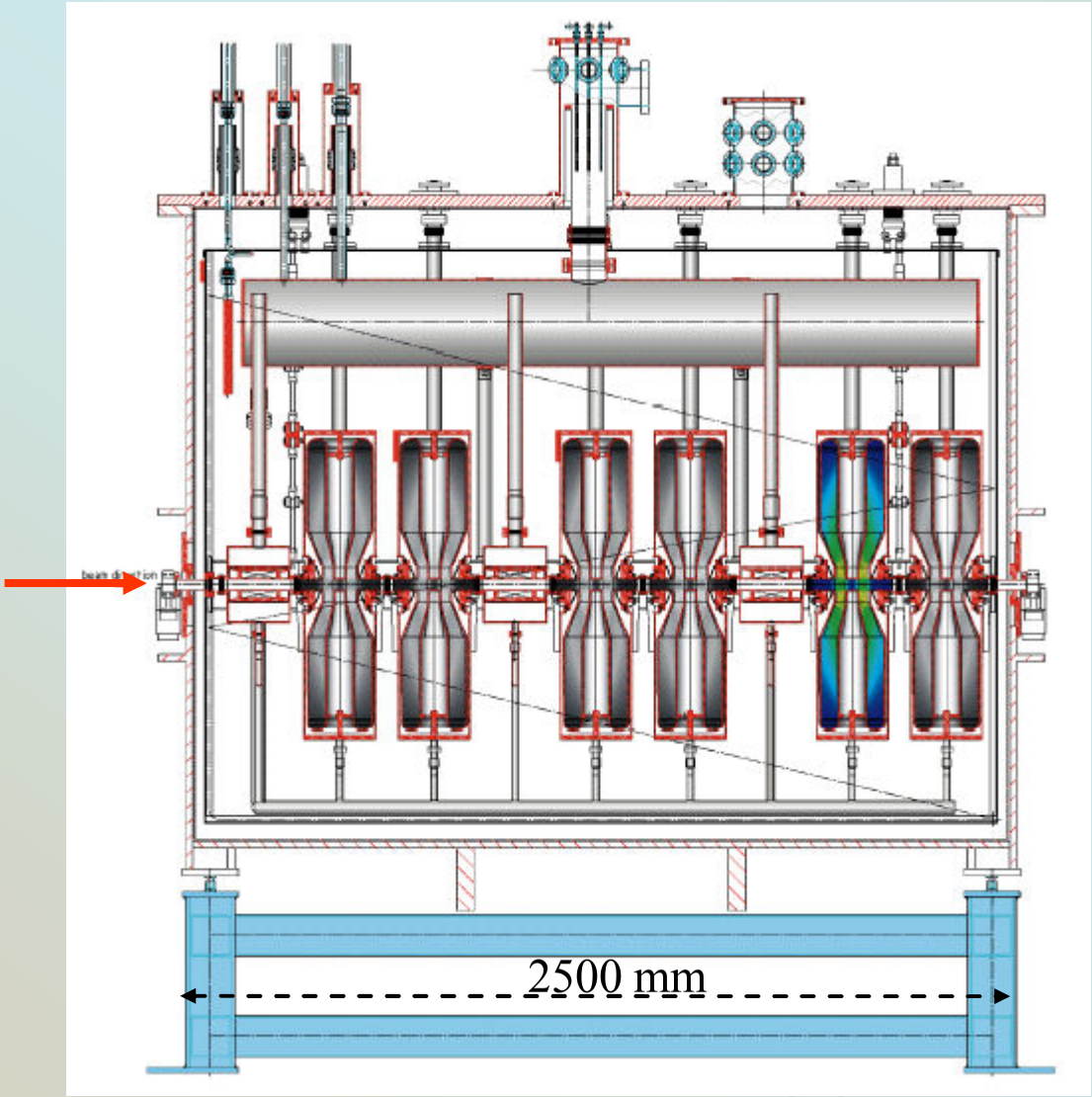

M. Peiniger, LINAC 2004

General Design:

- **Houses 6 HWR and 3 superconducting solenoids**
- **Accelerates protons and deuterons from 1.5 MeV/u on**
- **Very compact design in longitudinal direction**
- **Cavity vacuum and insulation vacuum separated**

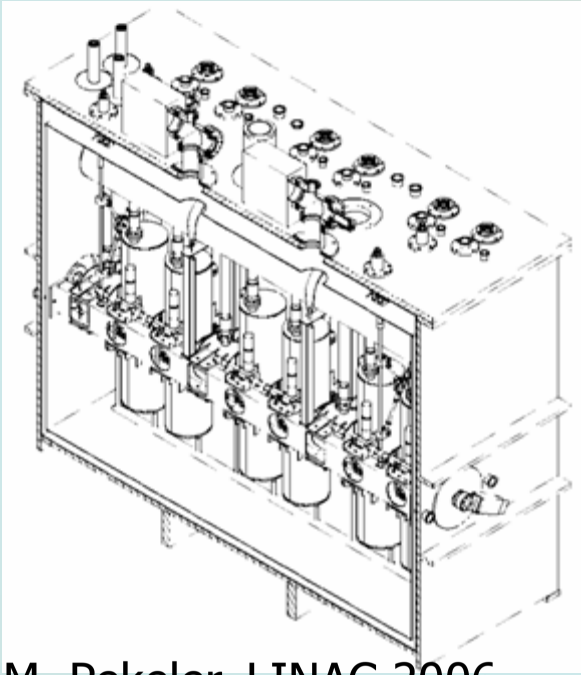

M. Pekeler, SRF 2003

M. Pekeler, LINAC 2006

HWR – Basic parameters

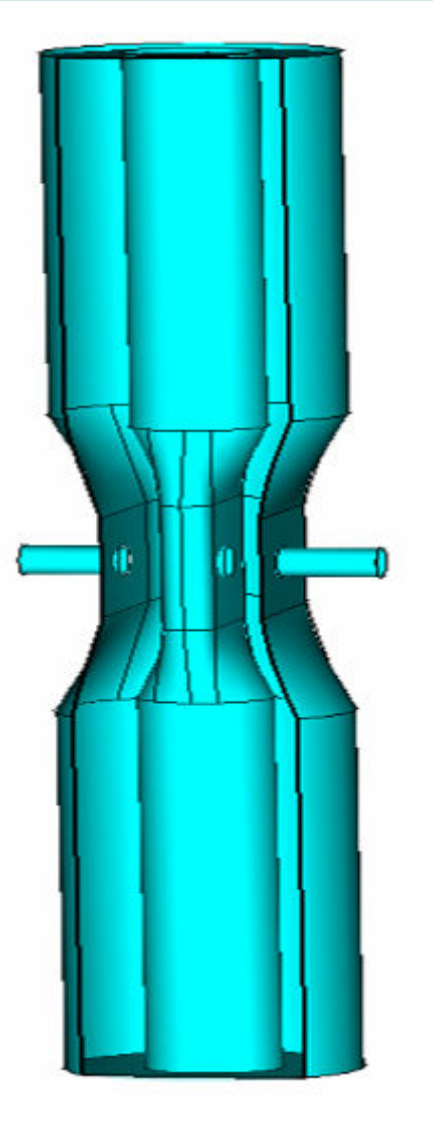

- f = 176 MHz & bandwidth ~ 130 Hz
- height ~ 85 cm high
- Optimized for
  - β=0.09 @ first 12 cavities (2 modules)
  - β=0.15 @ 32 cavities (4 modules)
- Bulk Nb single wall 3 mm (in SS vessel)
- $E_{peak,\ max}$ = 25 MV/m & E_{peak} / E_{acc} ~ 2.9
- $Q_0 \sim 10^9$ @ 4.45 K
- Designed cryogenic Load < 10 W (@E_{max})
- Measured response to pressure = 57 Hz/mbar

HWR measured fields and dissipated power

Cavity #	At Accel (single cavity) Vertical Test	At Soreq (inside PSM) Before Processing		After He Processing	
	25 MV/m	20 MV/m	25 MV/m	20 MV/m	25 MV/m
1	7.3	1.9	7	2.2	5.5
2	7.3	3.0	6.3	4.8	8.7
3	6.3	12.3	16.8	7.0	14.8
4	6.3	11.1	---	3.9	10.6
5	5.5	5.4	15.1	3.3	8.8
6	7.3	9.6	---	5.4	10.7
total	40	43.3	---	26.6	59.1

Closed loop operation with a voltage controlled oscillator (VCO)

C. Piel *et al.* EPAC 2008

A. Perry *et al.* SRF 2009

Target values 60 W @ 4.5 K for 25 MV/m dynamic loss

PSM Helium distribution system

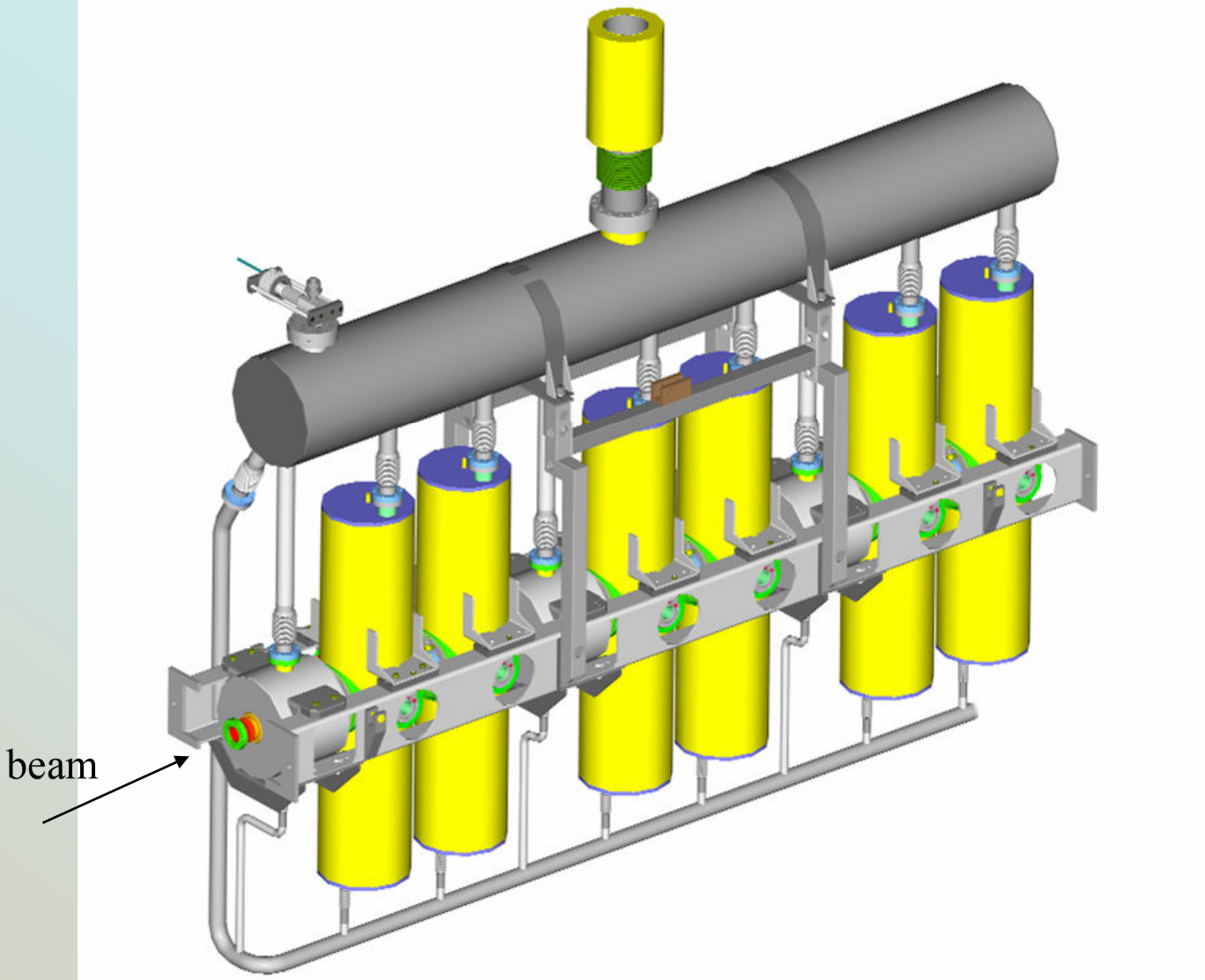

Setup with Diagnostic plate (D-Plate) for PSM beam commissioning

L. Weissman DIPAC 2009

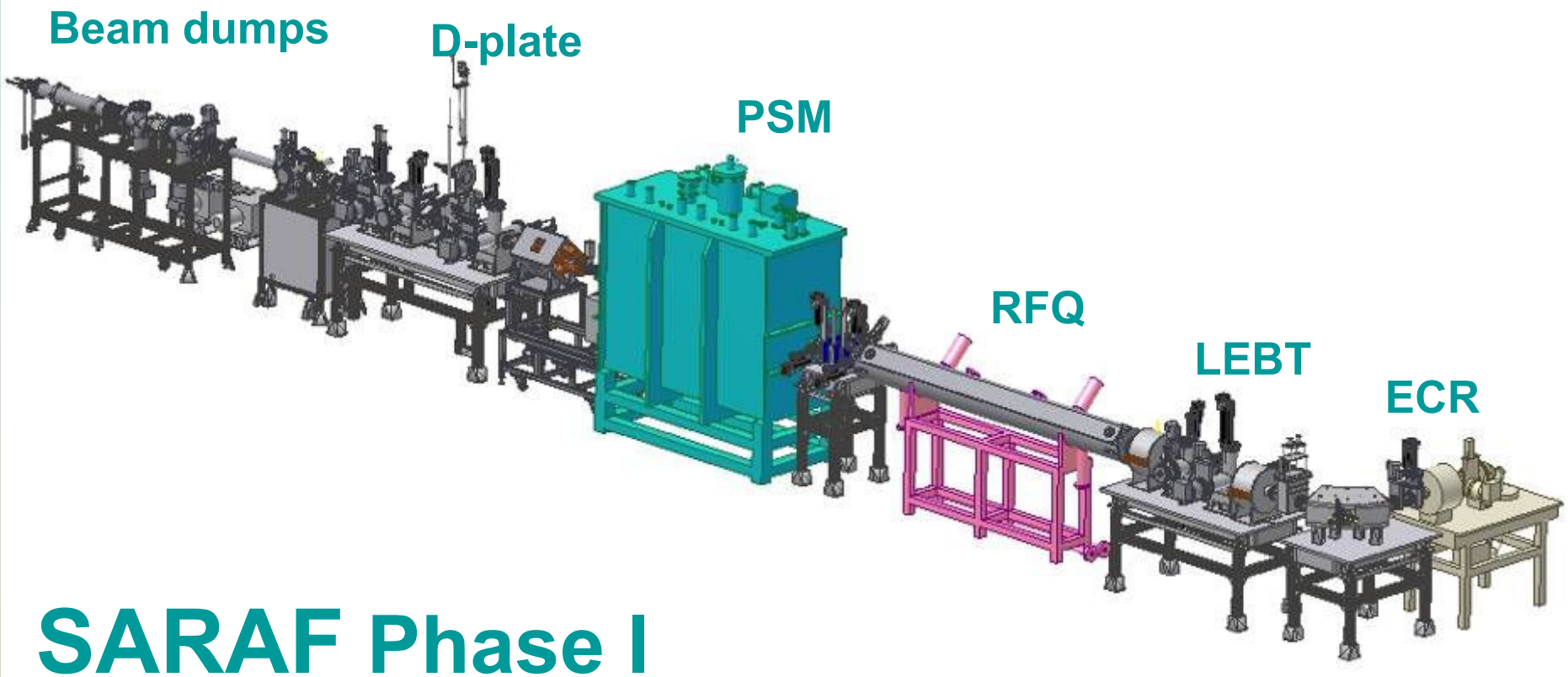

SARAF Phase I

Beam operation through the PSM

- First proton beam was delivered through the PSM in November 2008
- Accelerator parameters were set according to beam dynamics simulations (using TRACK - ANL)
- In August 2009 beam was accelerated using all cavities

	E (MeV)	I (mA)	DF
protons	4.0	2	1×10^{-4} *
	3.2	1.4	CW
deuterons	4.5	0.5	1×10^{-4} *

*** 100 μsec pulse, 1 Hz**

I. Mardor *et al.*, SRF 2009

Microphonics measurements*

HWRs are extremely sensitive to He pressure fluctuations (60 Hz/mbar)

Detuning signal is dominated by the Helium drift

Detuning sometimes exceeds +/-200 Hz (~ +/-2 BW).

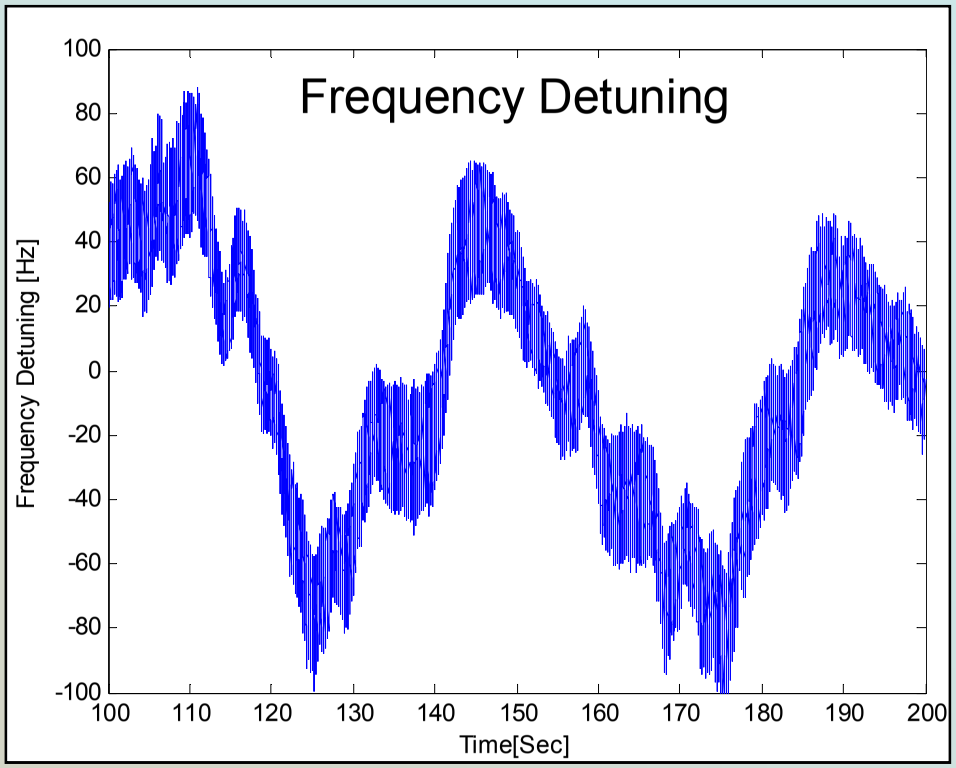

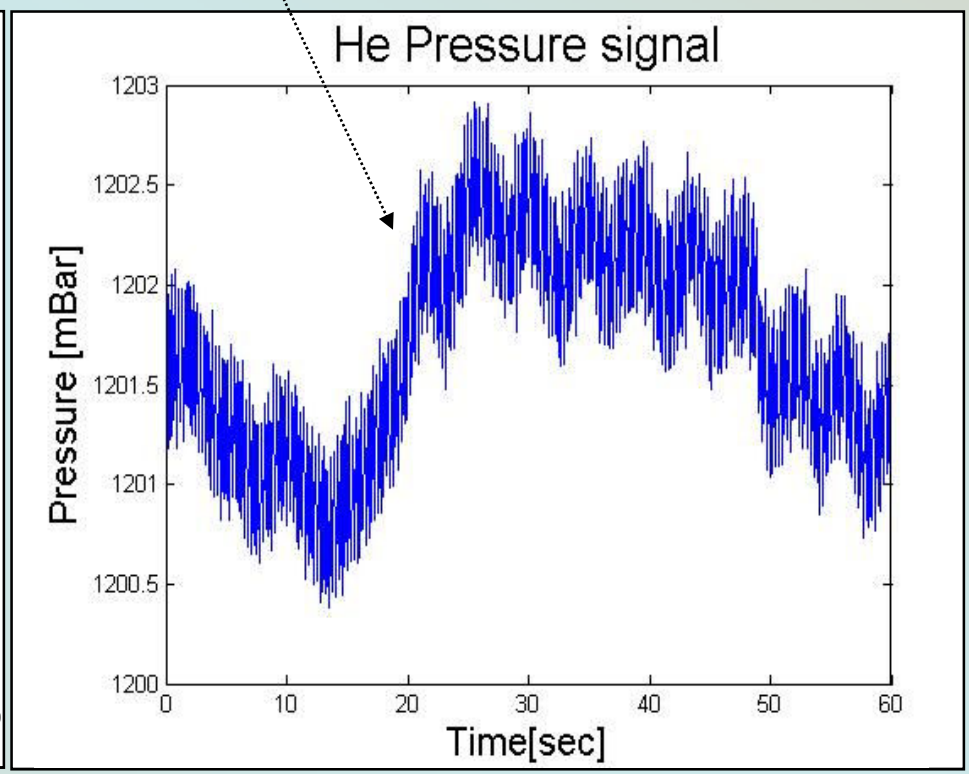

* Performed in collaboration with J.Delayen and K. Davis (JLab)

Cavity Tune*

<u>Stepper motor</u> is used for coarse tuning.
Stepper motor movement induces instabilities and is therefore disabled during RF operation

<u>Piezoelectric actuator</u> provides fine tuning of the resonance frequency

Range reduction of the piezoelectric elements Were subsequently replaced

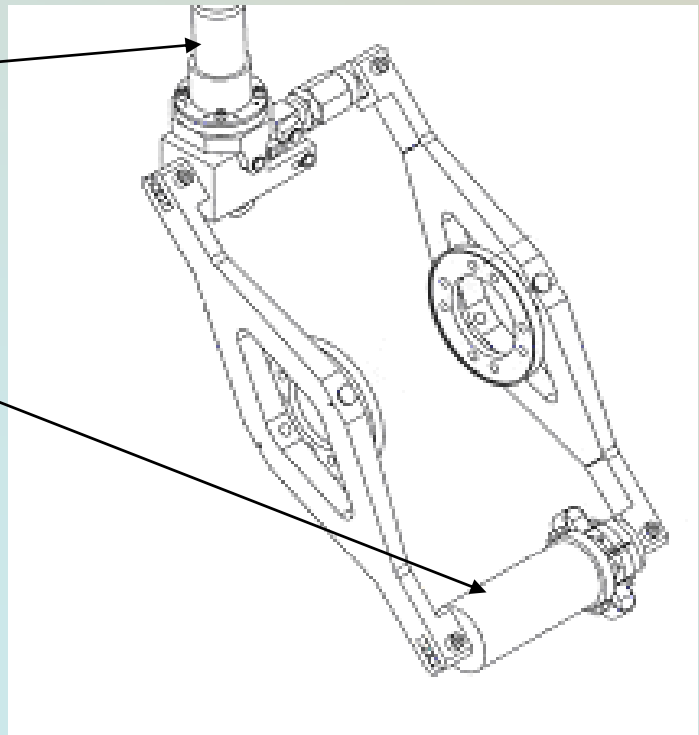

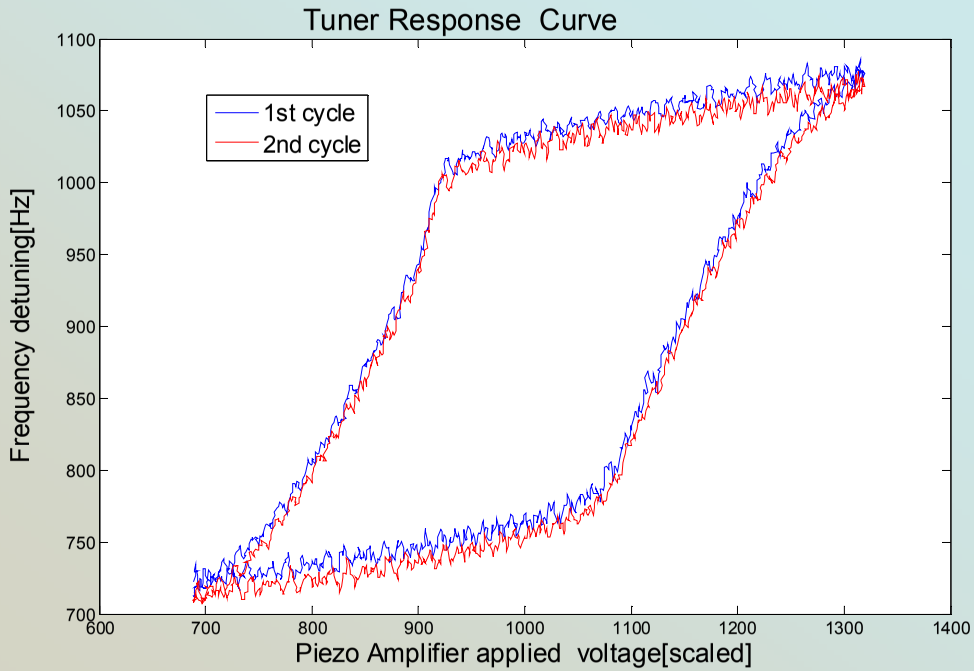

Response of the fine tuner is **highly non-linear**

* Performed in collaboration with J.Delayen and K. Davis (JLab)

D-Plate for commissioning

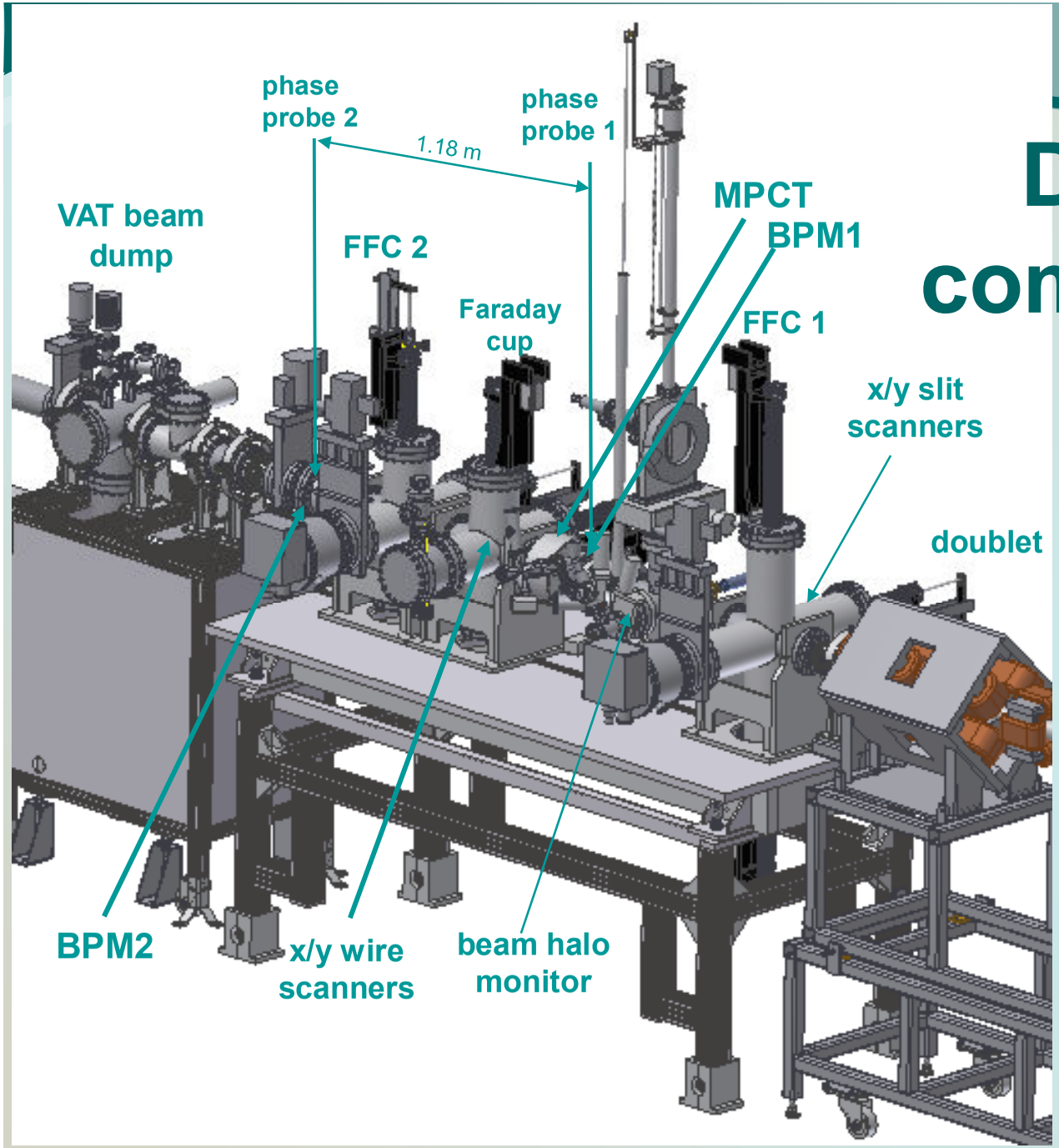

L. Weissman
DIPAC 2009

Transversal emittance

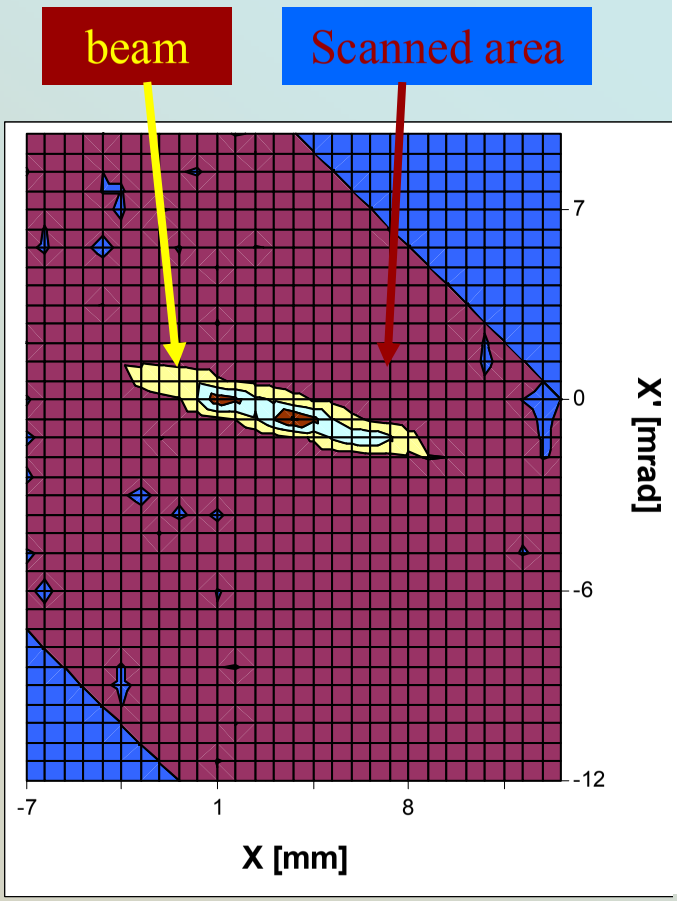

Colors chosen to enhance background

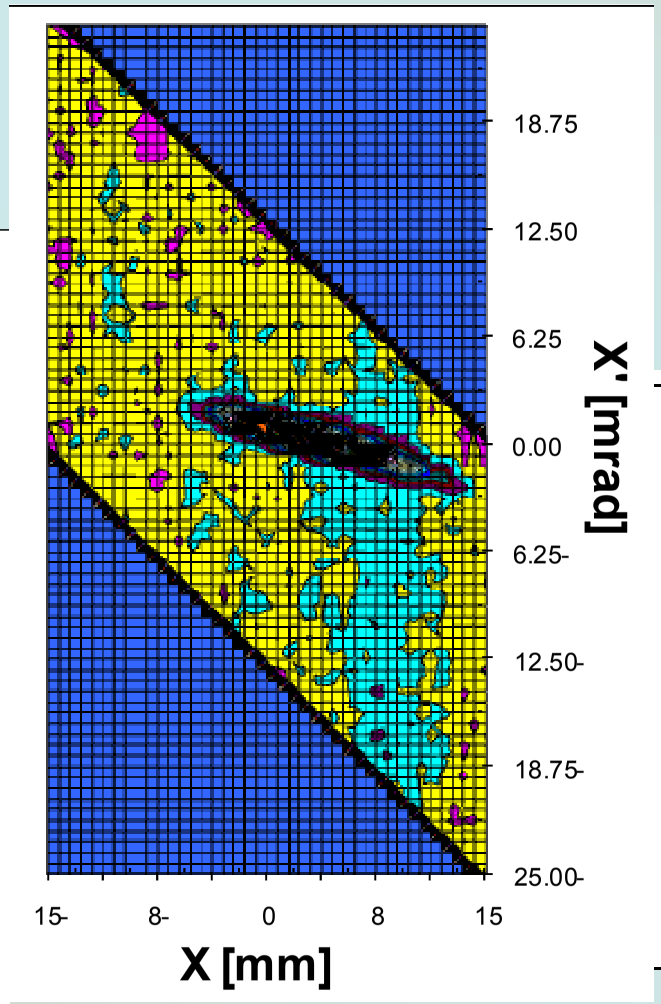

- Protons at 2.2 MeV
- ε~0.15 π mm mrad rms norm. out of an area excluded the satellite peak

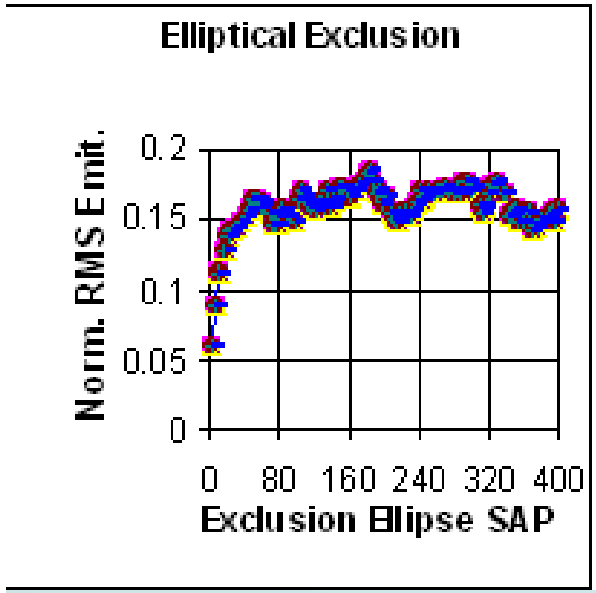

Beam energy at the Halo Monitor

300 μg/cm2 gold foil
glued on graphite frame

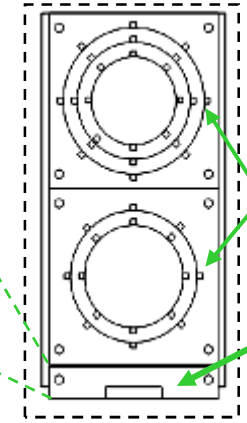

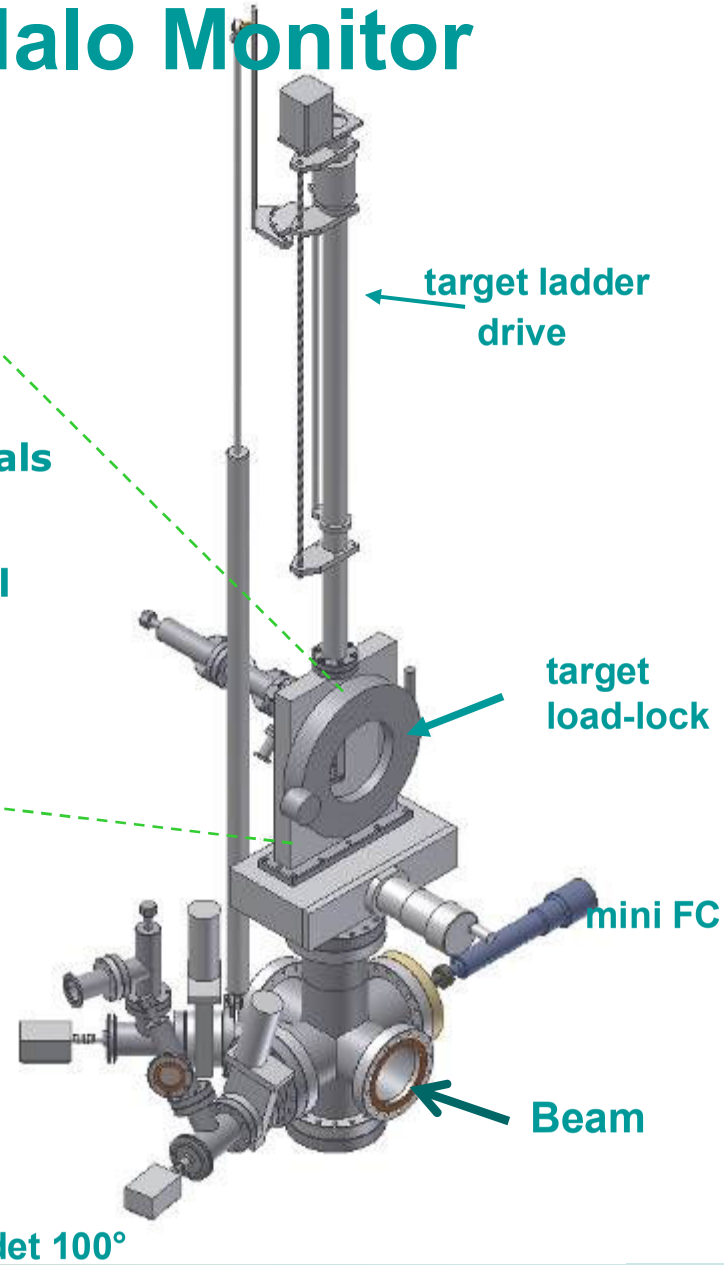

Energy measurements are possible because FFC and beam dynamics simulation show that the energy distribution on the beam side is similar to the core

I. Mardor *et al*, LINAC 2006
L. Weissman *et al*, DIPAC 2009

Proton beam energy measurement using Rutherford scattering (RS)

Typical spectrum without cavity voltages (RFQ only). Background (removed foil) was subtracted.

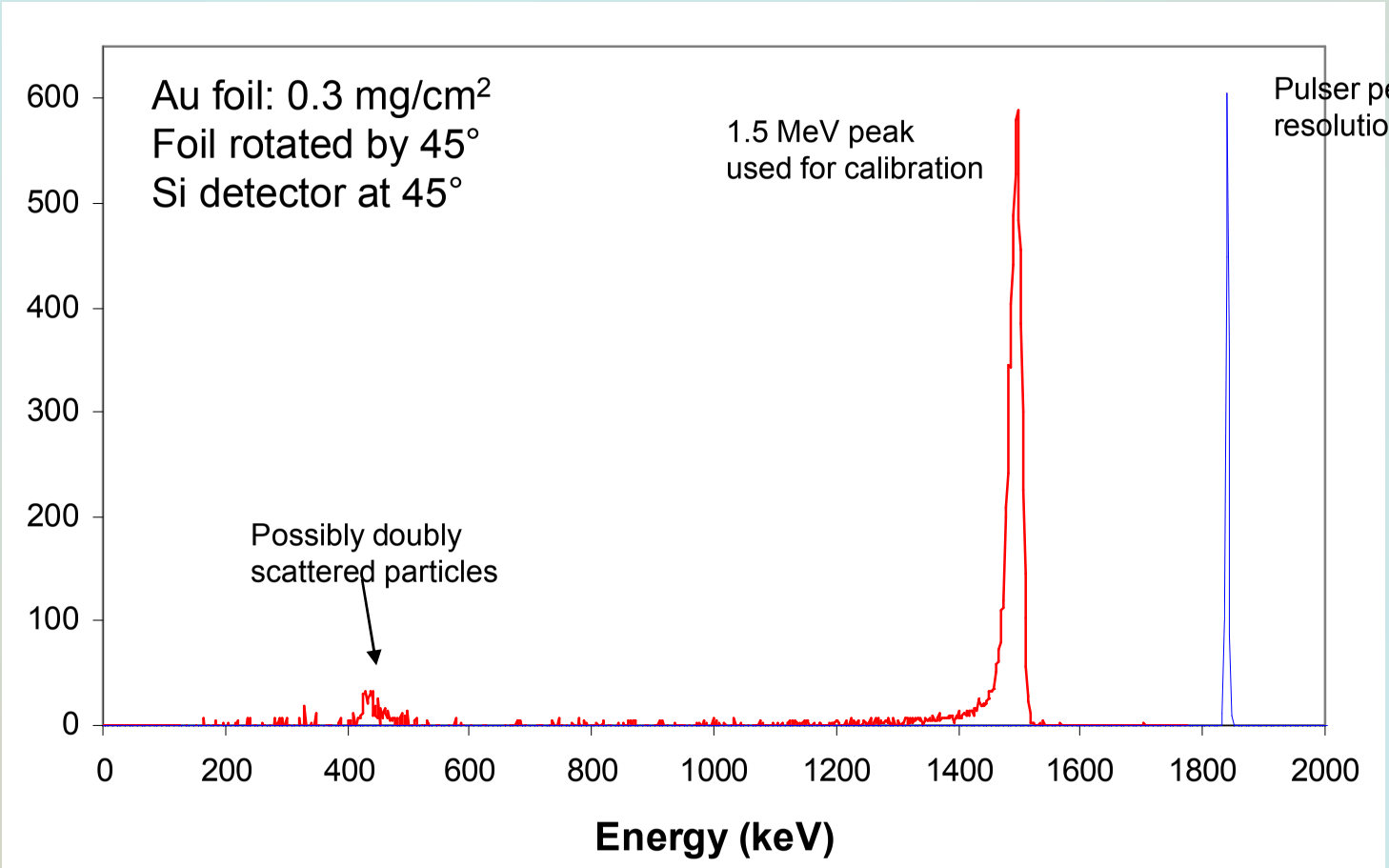

Proton beam energy measurement using Rutherford scattering

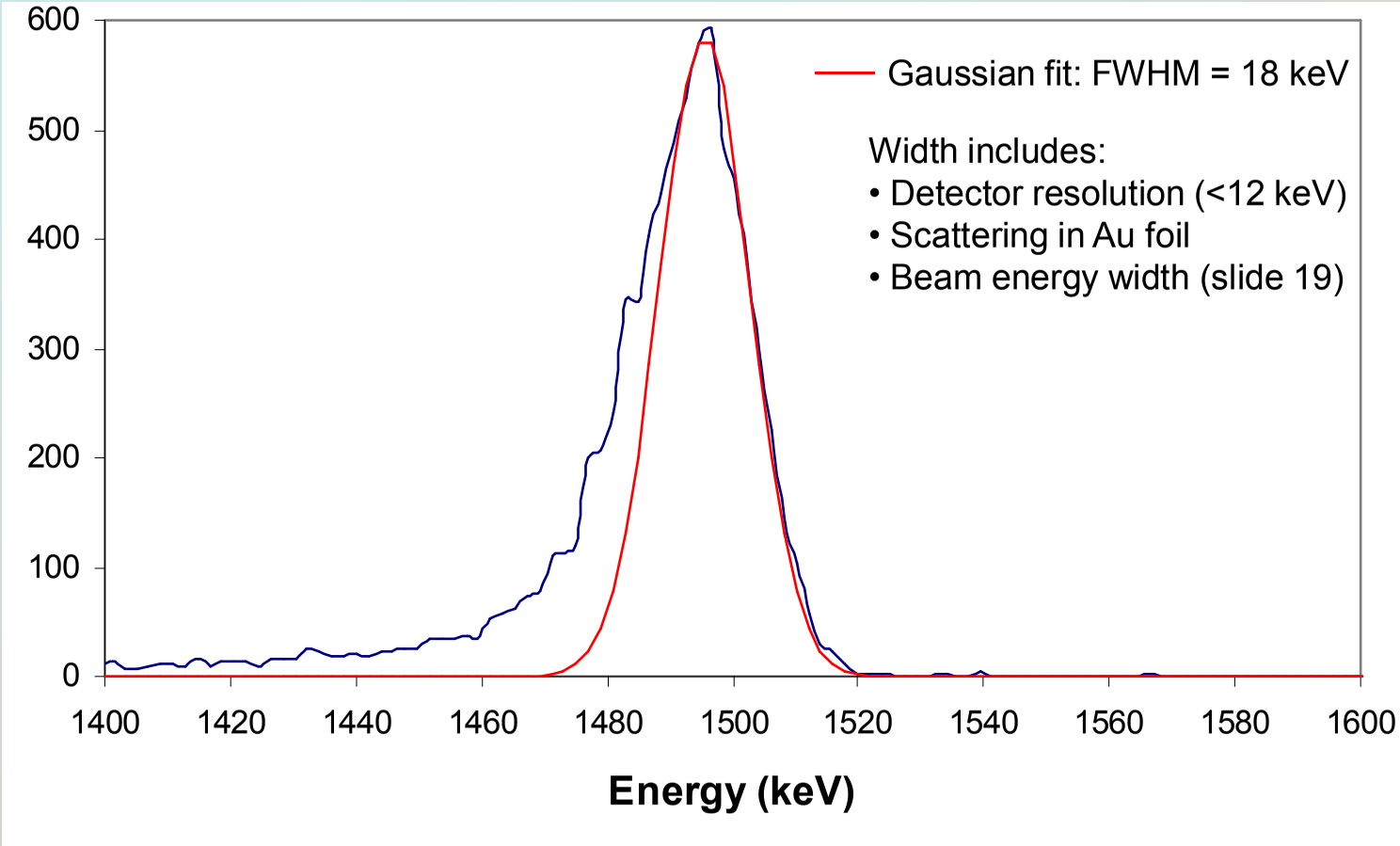

The low energy tail is most probably enhanced due to rise time of RFQ voltage pulse (Si detector not gated). This is supported by beam dynamics simulations.

Calibrating HWR#4

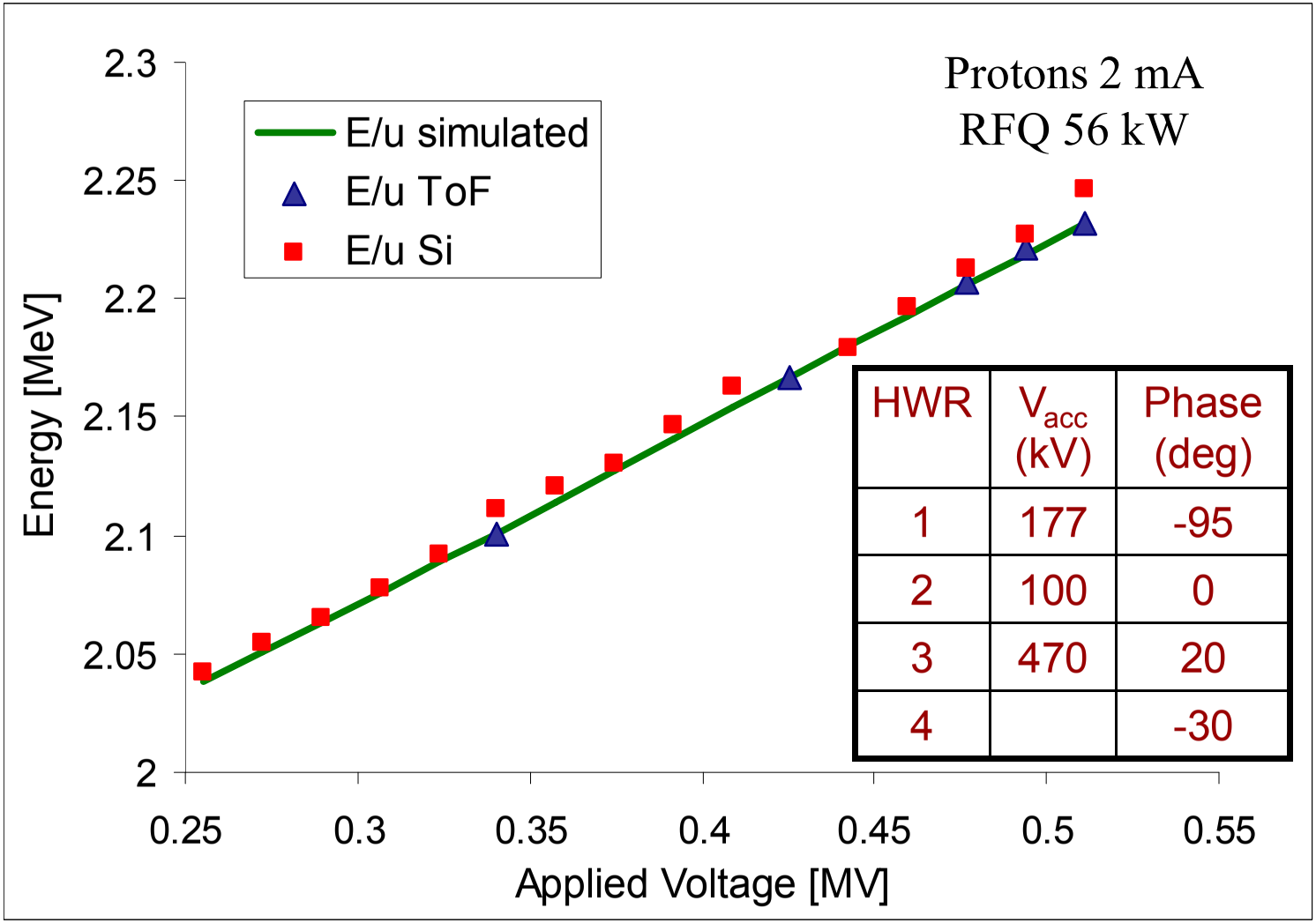

HWR	V_{acc} (kV)	Phase (deg)
1	177	-95
2	100	0
3	470	20
4		-30

Phasing of cavity HWR#6

Protons 2 mA

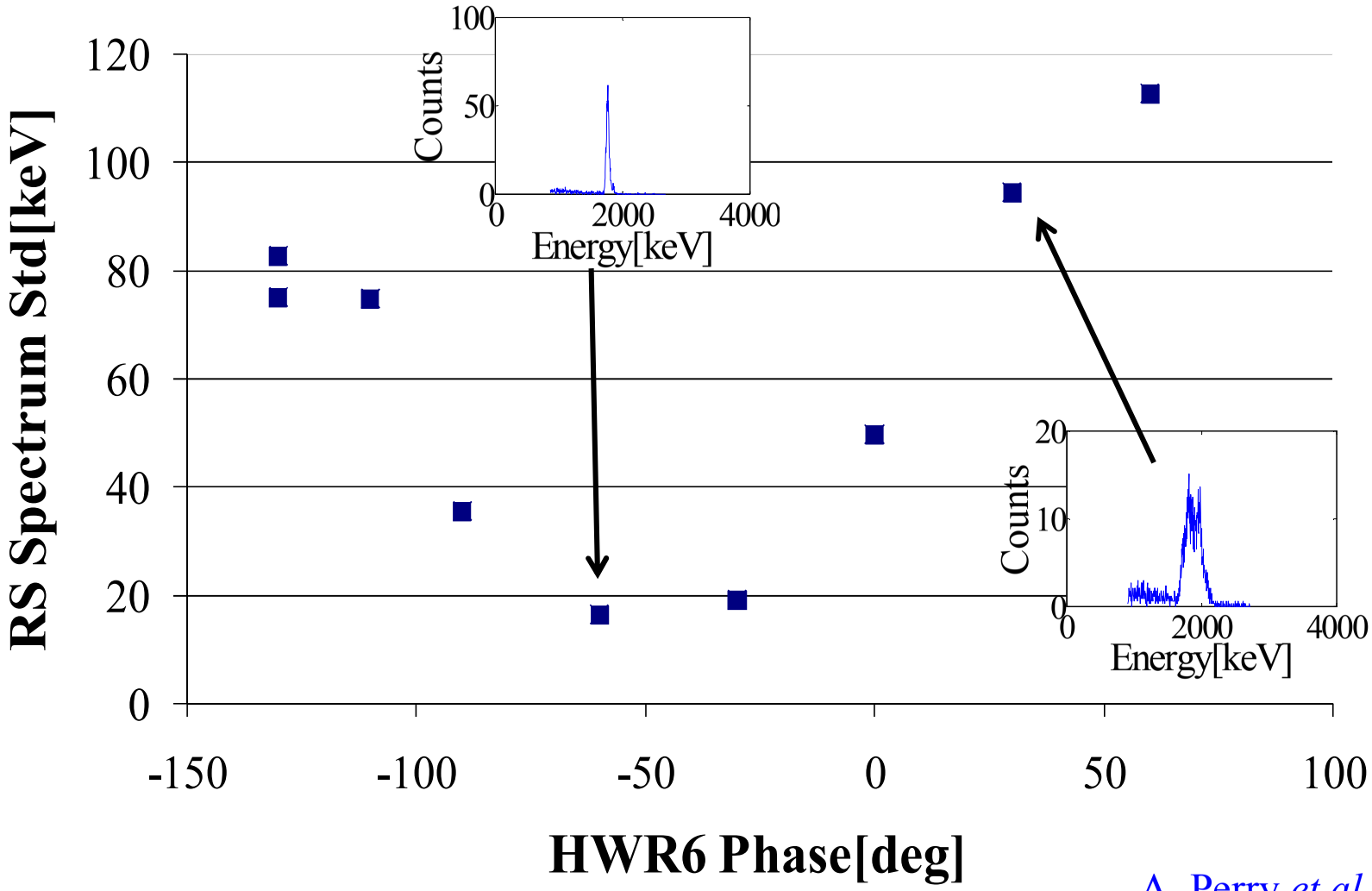

A. Perry *et al.* SRF 2009

SARAF today

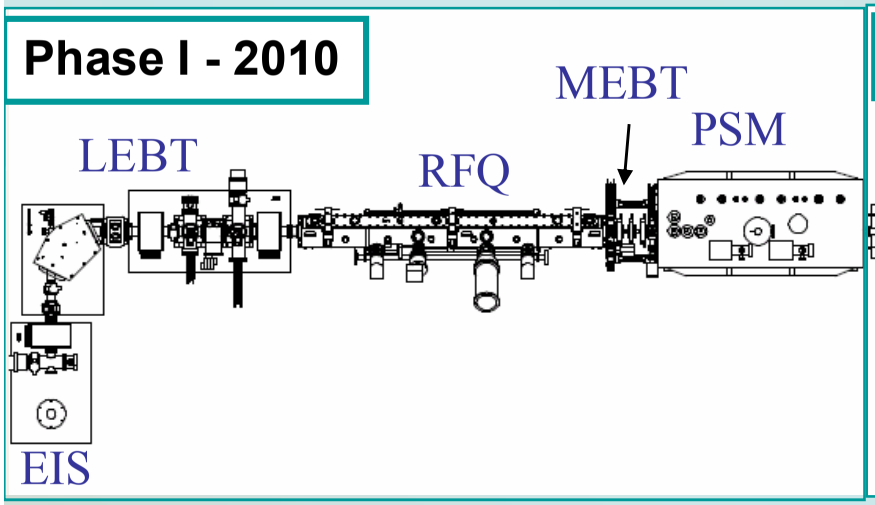

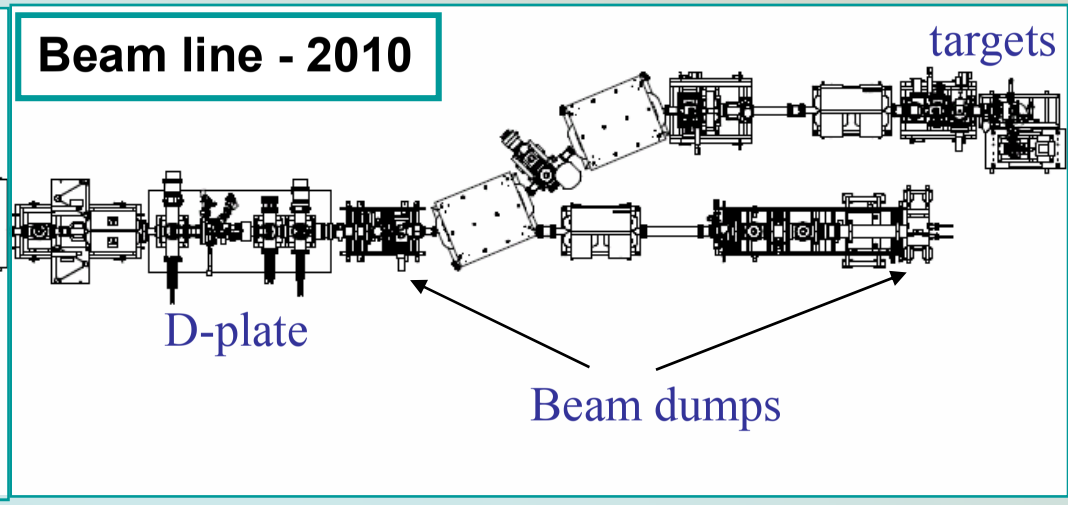

<u>Situation in beginning of 2011</u>:

The turn-key concept did not work. At present work is done mostly by the local team.

The local team and its expertise grew significantly

Phase I is not commissioned yet to full specs (CW deuterons), but accelerator is operational

The concept of Phase II is being developed in collaboration with accelerator laboratories

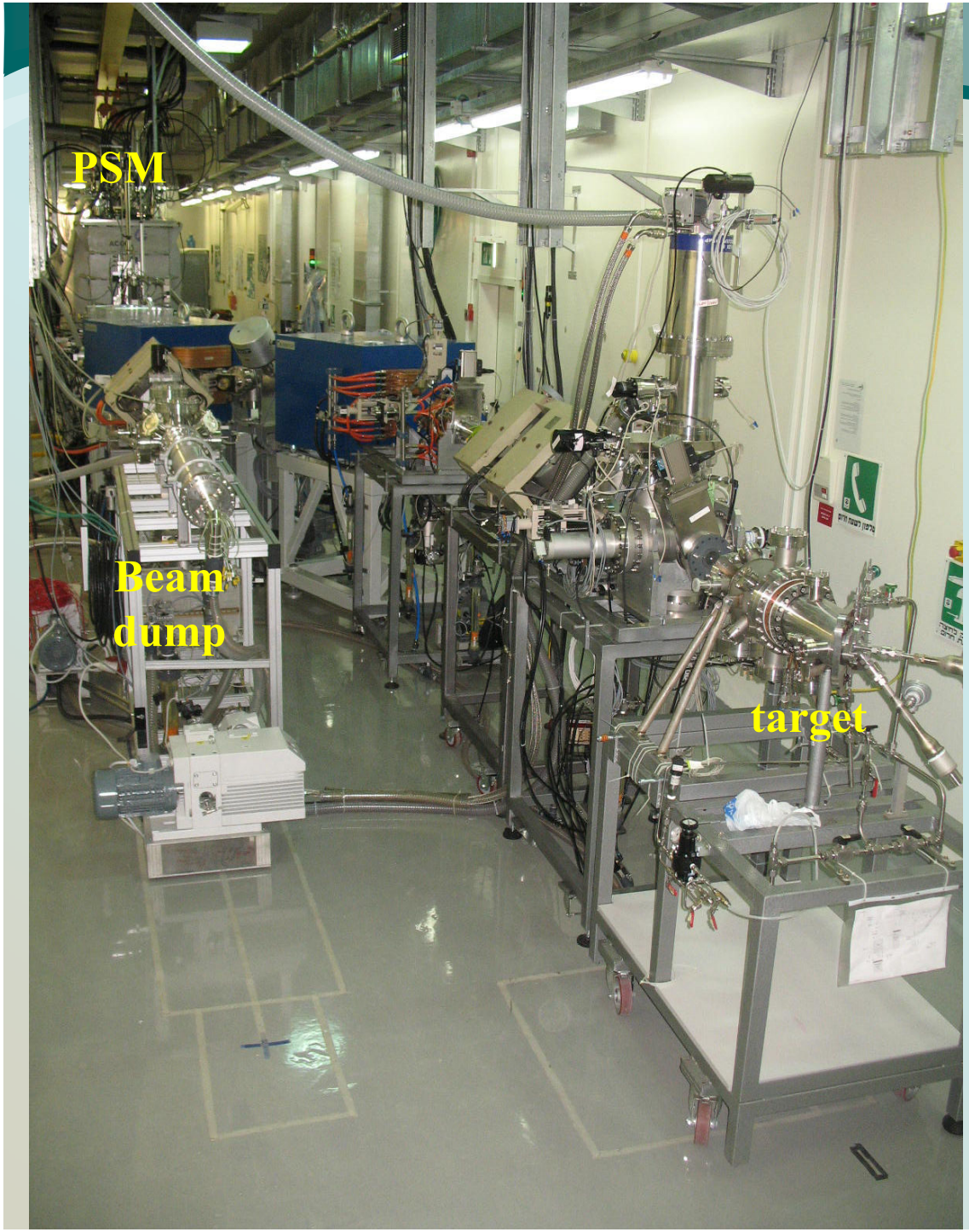

Beam lines downstream the linac for in vacuum target studies

H. Hirshfeld *et al.* NIM A 2006
E. Lavie *et al.* INS23 2006
I. Silverman *et al.*, NIM B261 2007
M. Hass *et al.*, *J.* Phys. *G* 2008
T. Hirsh *et al.*, PoS 2009
G. Feinberg *et. al.*, Nucl. Phys. A 2009
Halfon *et. al.*, Appl Radiat Isot. 2009
M. Paul *et al.* US patent WO/2009/007976
S. Vaintraub *et al.* INS25 2010

Experience with the Tungsten Beam dump

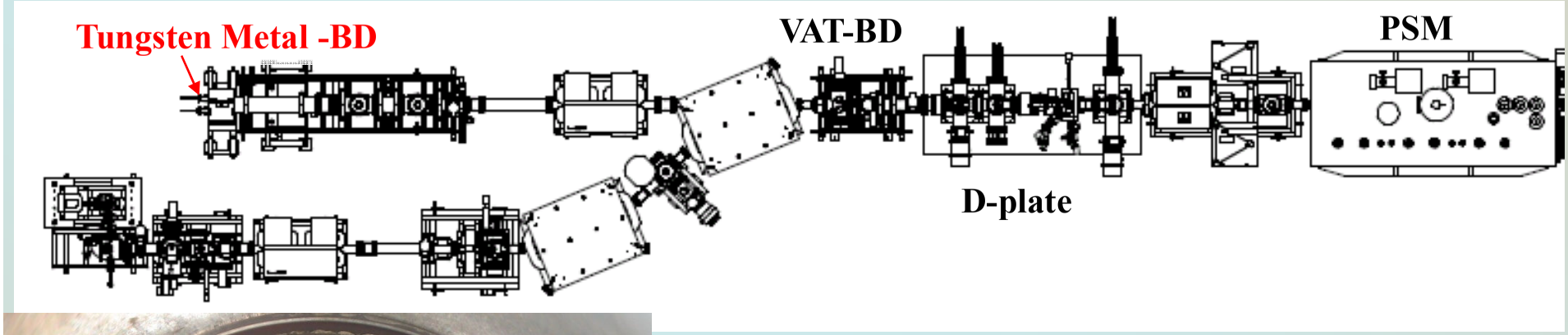

The beam dump 250 micron Tungsten sheet fused to a water cooled cooper plate.
Up to 20 kW, no activation is expected.
Visual inspection reveal strong blistering effects.

Improve diagnostics tools:
- temperature mapping
- radiation mapping (gamma, neutrons)
- better vacuum control including RGA
- segmented collimator
- on-line visual inspection

SARAF Phase II simulations with error analysis

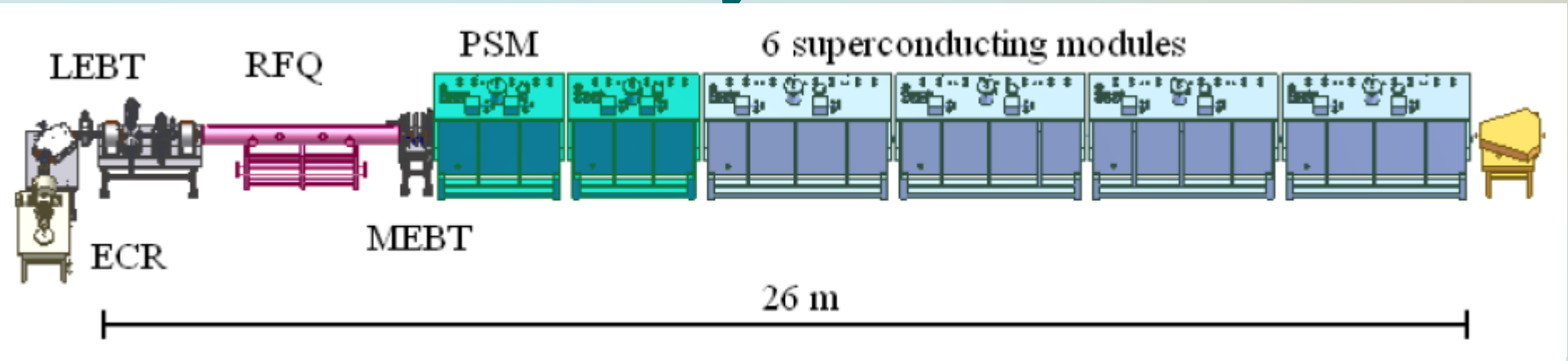

Simulations shown in next slide:

- 4 mA deuterons at RFQ entrance.
- Last macro-particle=1 nA

B. Bazak *et al.*, Submitted for Publication
J. Rodnizki *et al.*, HB2008

Component	Error	Static	Dyn.
Quadrupole Magnets	Misalignment x,y,z [mm]	± 0.2	
	Rotation θ [mrad]	± 3	
	Magnetic field [%]	± 2	0.5
Solenoids	Misalignment x,y,z [mm]	± 0.2	
	Magnetic field [%]	± 2	0.5
HWR	Misalignment x,y,z [mm]	± 0.4	
	Rotation θ [mrad]	± 6	
	Field strength [%]	± 2	0.5
	Phase [degree]	± 1	0.25

Errors are double than in: J. Rodnizki *et al.* LINAC 2006, M. Pekeler HPSL 2005

Deuteron beam envelope radius at SARAF SC Linac

Solenoids **19**

Tail emphasis simulations

200 realizations

70 realizations

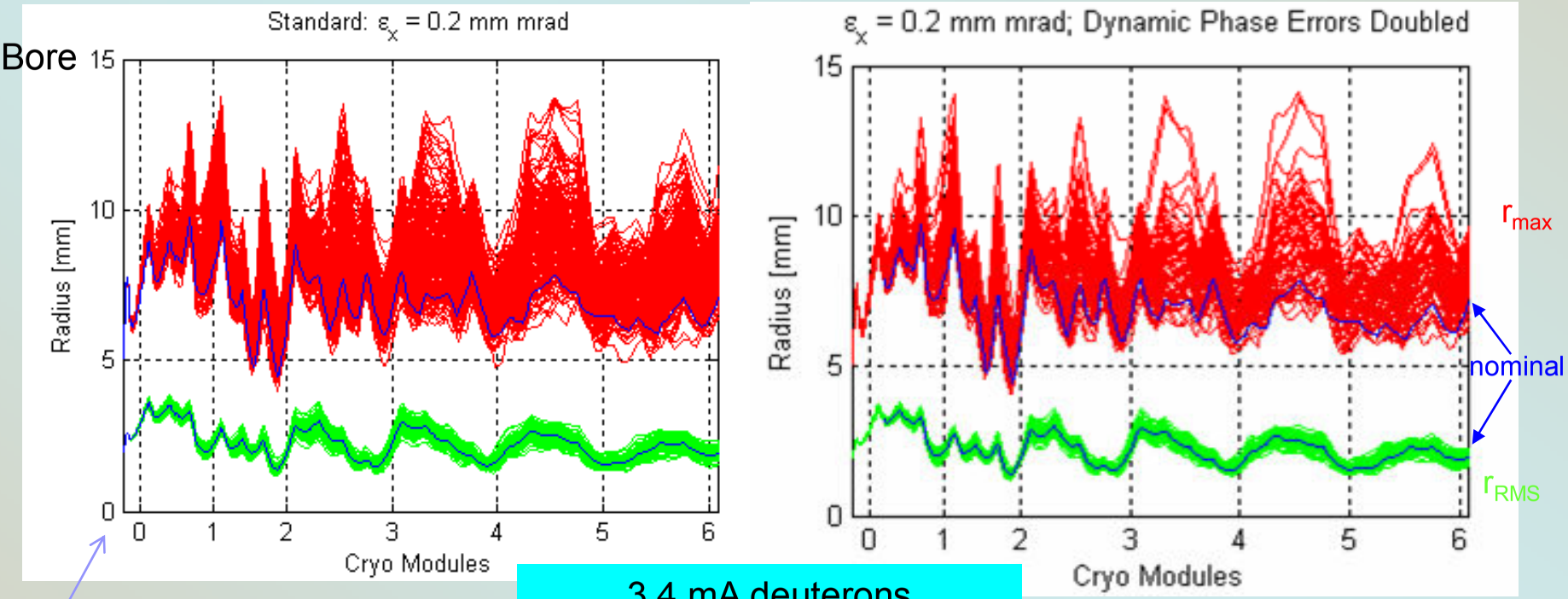

3.4 mA deuterons
32k/193k particles in core/tail
Last macro-particle = 1 nA

B. Bazak *et al.*, Submitted for Publication
J. Rodnizki *et al.*, HB2008

General Particle Tracer 2.80 2006, Pulsar Physics S.B. van der Geer, M.J. de Loos http://www.pulsar.nl/

Beam loss criterion

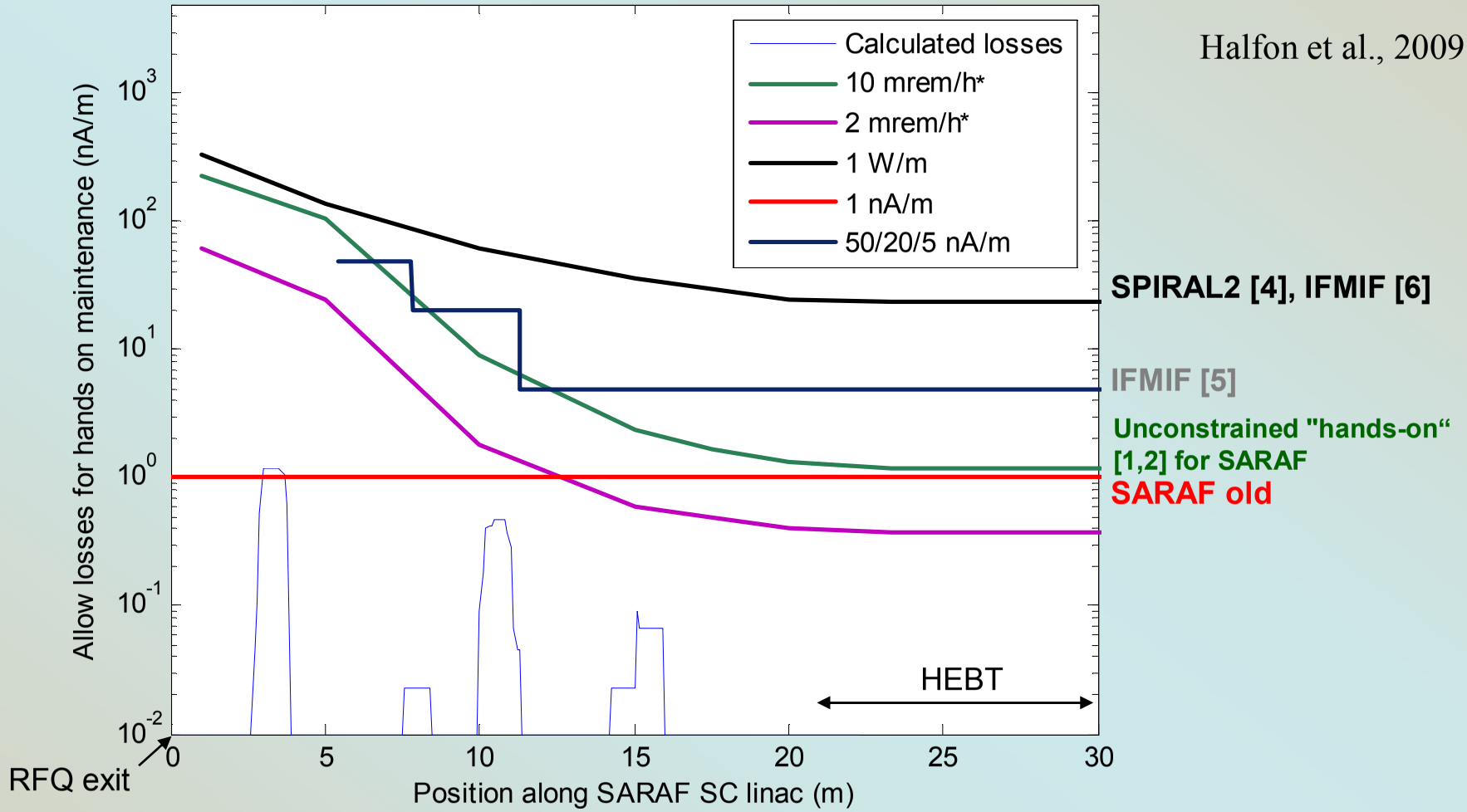

Halfon et al., 2009

* Beam loss criterion which will yield the specified dose rate along SARAF SC linac

[1] J. Alonso, "Beam loss working group report", The 7th ICFA mini-workshop on high intensity high brightness hadron beams, Lake Como, Wisconsin, September 1999.

[2] R. A. Hardekopf, "Beam loss and activation at LANSCE and SNS", The 7th ICFA mini-workshop on high intensity high brightness hadron beams, Lake Como,Wisconsin, September 1999.

[4] T. Junquera et. al., "Status of the construction of the SPIRAL2 accelerator at GANIL", Proc. Of LINAC08, Victoria, BC, Canada, 2008.

[5] M. Sugimoto and H. Takeuchi, "low activation material applicable to the IFMIF accelerator", Journal of Nuclear Material, 329-333 (2004) 198-201.

[6] P. A. P. Nghiem et. al., "Parameter design and beam dynamics simulations for the IFMIF-EVEDA accelerators", Proc. Of LINAC08, Victoria, BC, Canada, 2008.

People involved

SARAF team (including students, advisers and partially affiliated personal) :
A. Nagler (until 2008), I. Mardor, D. Berkovits,
A. Abramson , A. Arenshtam, Y. Askenazi, B. Bazak (until 2009),
Y. Ben-Aliz, Y. Buzaglo, O. Dudovich, Y. Eisen, I. Eliyahu, G. Finberg,
I. Fishman, I. Gertz, A. Grin, S. Halfon, D. Har-Even D. Hirshman,
T. Hirsh, A. Kreisel, D. Kijel, G. Lempert, A. Perry, R. Raizman (until 2010),
E. Reinfeld, J. Rodnizki, A. Shor, I. Silverman, B. Vainas, L. Weissman,
Y. Yanay (until 2009).

RI&Varian /(former ACCEL):
H. Vogel, C. Piel, K, Dunkel, P. Von Stain, M. Pekeler, F. Kremer,
D. Trompetter, many mechanical and electrical engineers and technicians

Cryoelectra :
B. Aminov, N. Pupeter, …

NTG/ Frankfurt Univ:
A. Bechtold, Ph. Fischer, A. Schempp, J. Hauser

END

MEBT: Overview

Main components:

- Three quadrupols (31 T/m) with steering magnets
- Two diagnostic chamber
- Two x/y wire scanners
- Three pumps and one gauge
- Two 4-button BPMs
    - Position
    - Phase
    - Current

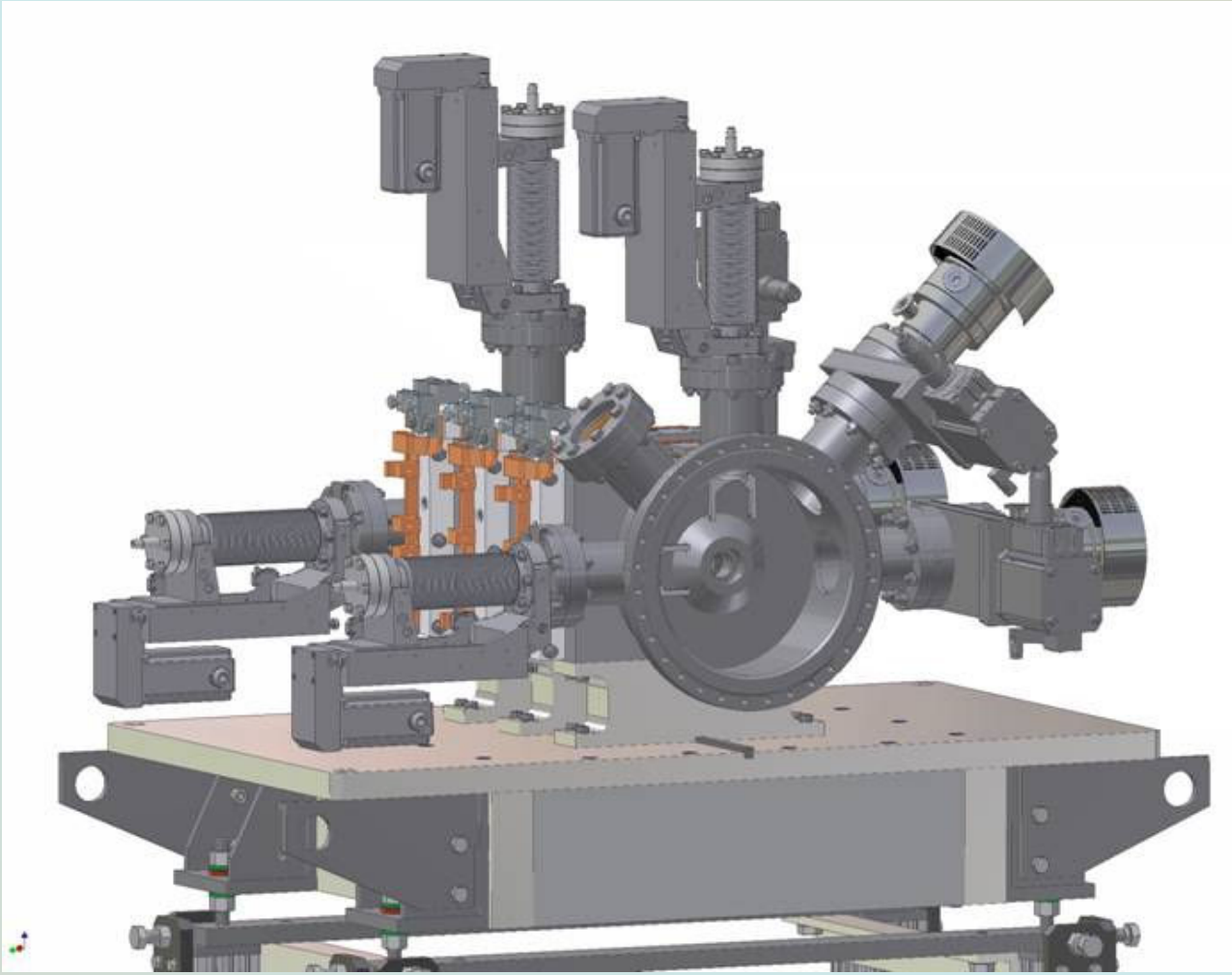

MEBT

650 mm

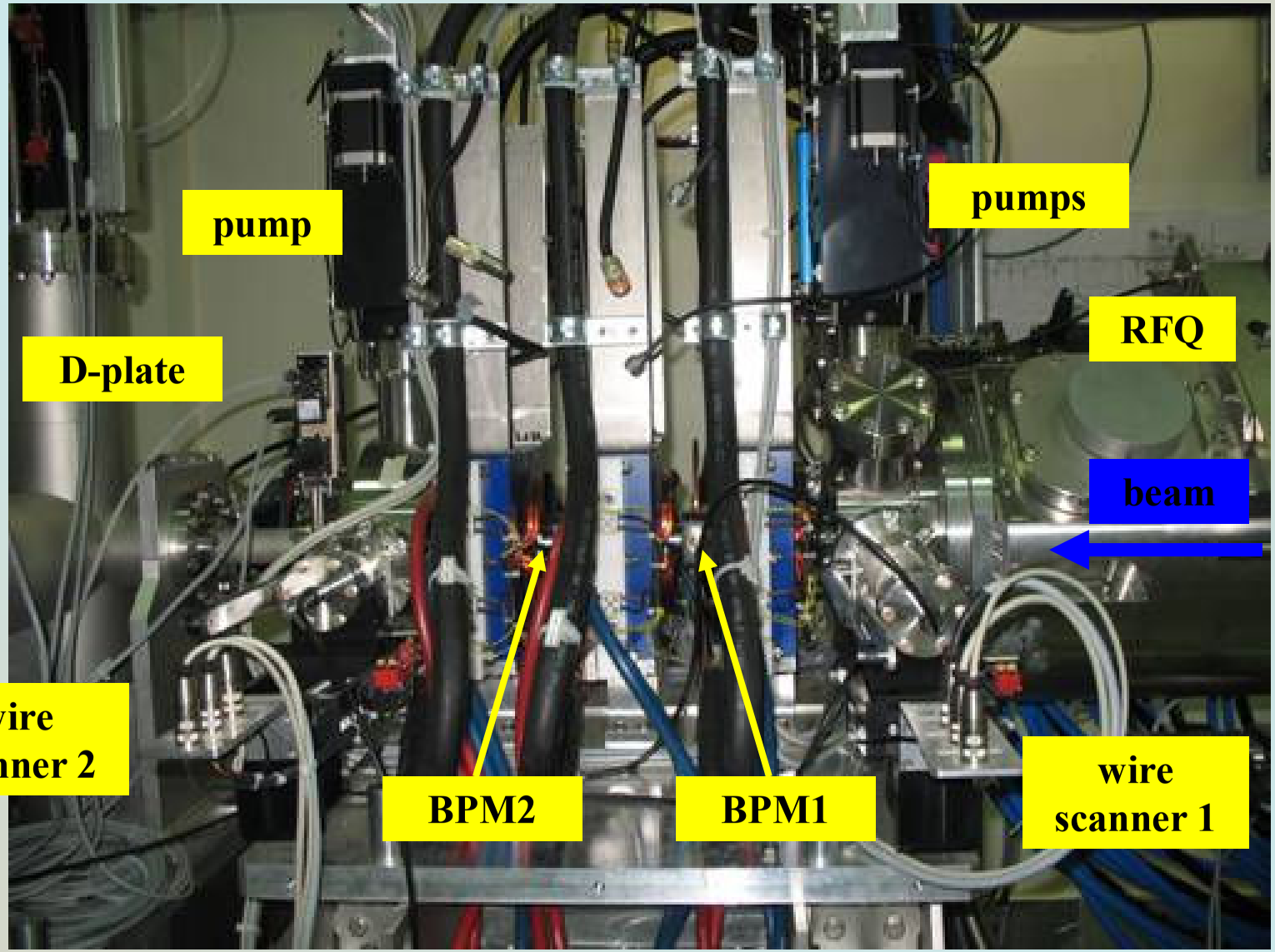
pump
pumps
RFQ
D-plate
beam
wire
scanner 2
BPM2
BPM1
wire
scanner 1

D-Plate for commissioning

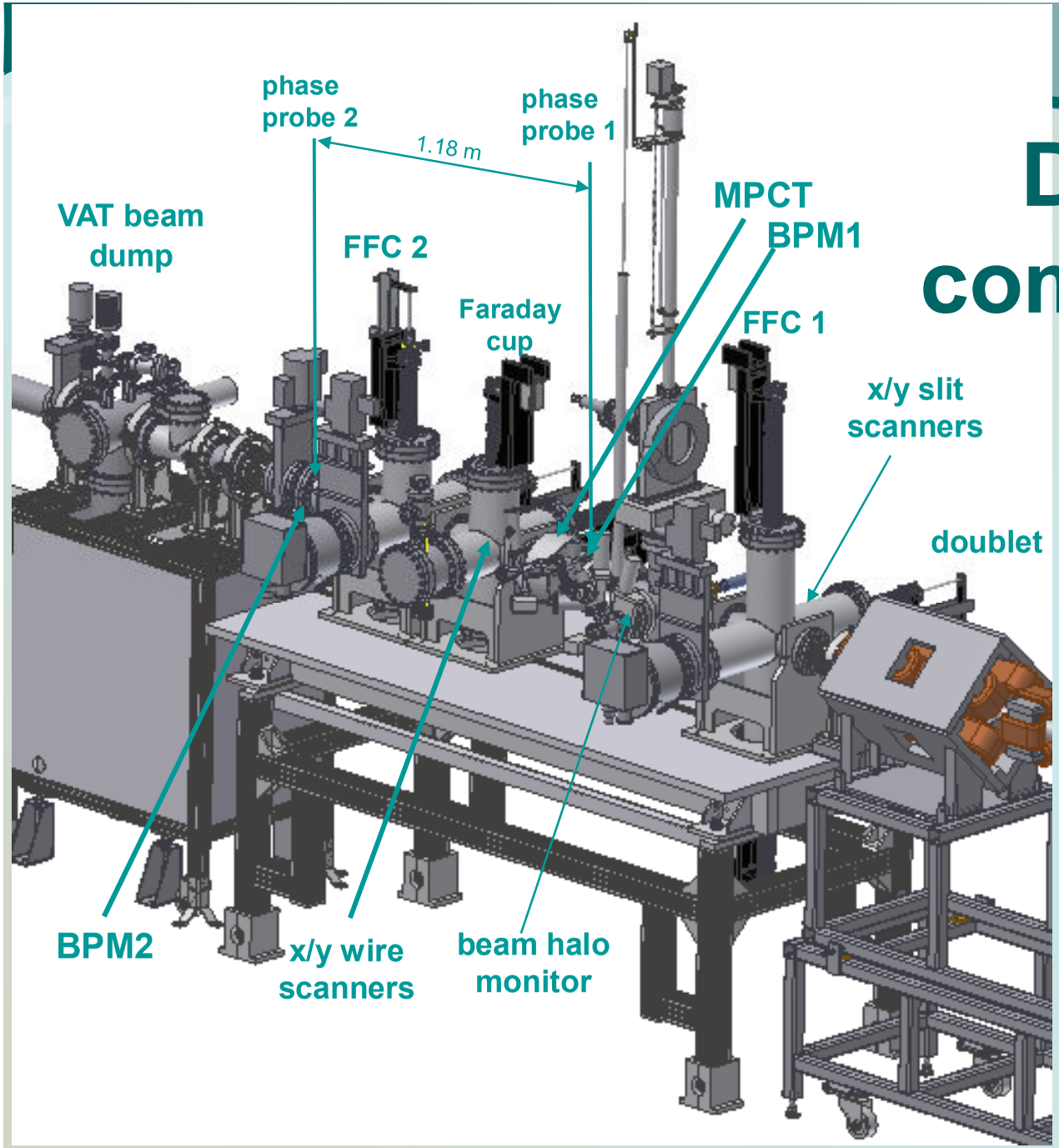

L. Weissman
DIPAC 2009

RFQ RF conditioning

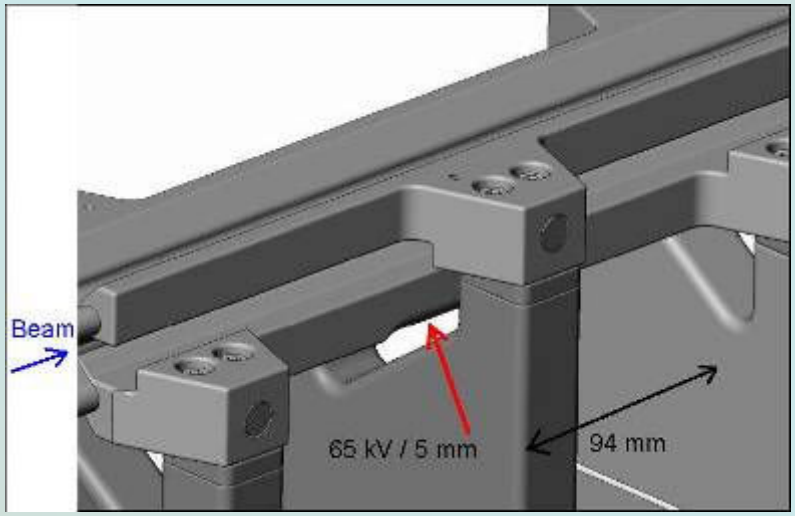

Melted tuning plate after extraction

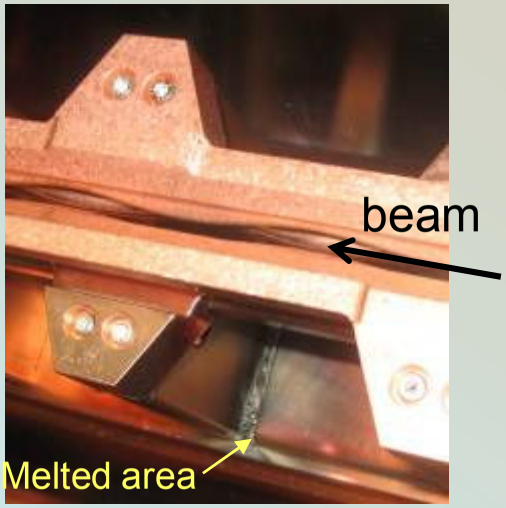

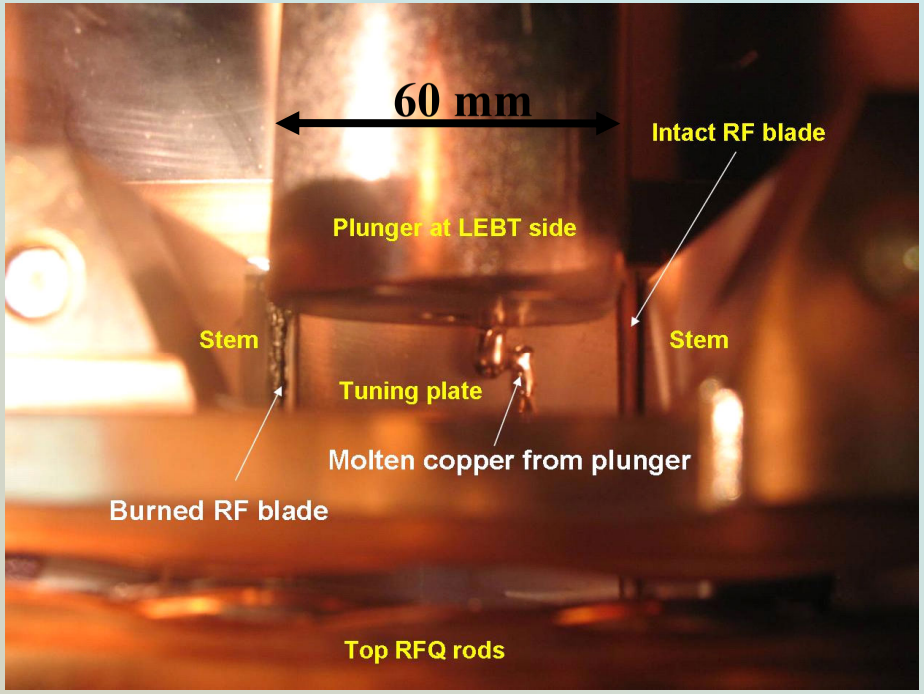

Input Power [kW]	Duration [hrs]
190 (CW)	12
210 (CW)	2
240 (CW)	0.5
260 (DC = 80% @ 440 Hz)	0.5

I. Mardor et al., PAC 2009

I. Mardor et al., SRF 2009

RFQ: Protons bunch profile measurements

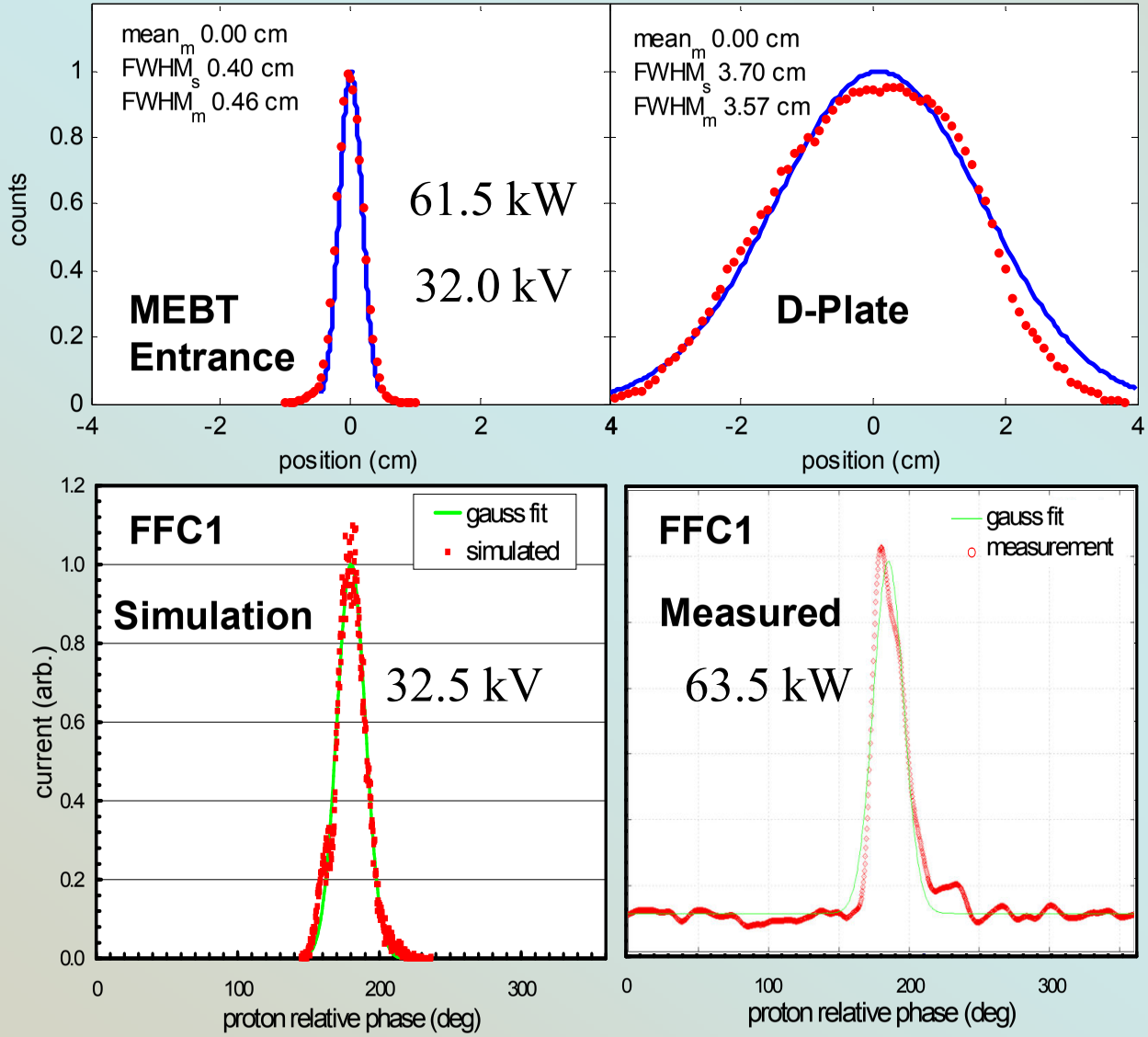

Wire scan profiles

C. Piel PAC 2007

Measurement results are backed up by simulations (TRACK)

FFC time profiles

Rodnizki et al. EPAC 2008

RFQ Conditioning – status

- Several hundred conditioning hours for two years
- Conditioning schemes
  - Set maximum power and increase duty cycle
  - Set CW duty cycle and increase power
- Special actions to improve conditioning rate:
  - Rounding of sharp edges of rods bottom part
  - Cleaning of rods
  - Installation of circuit for fast recovery after sparks
  - Baking at 75°C for a week in vacuum and for a day with flowing nitrogen
  - Add a 3rd pump to the two existing TMPs

➔ Reach field for deuterons and hold CW for minutes

RFQ field flatness

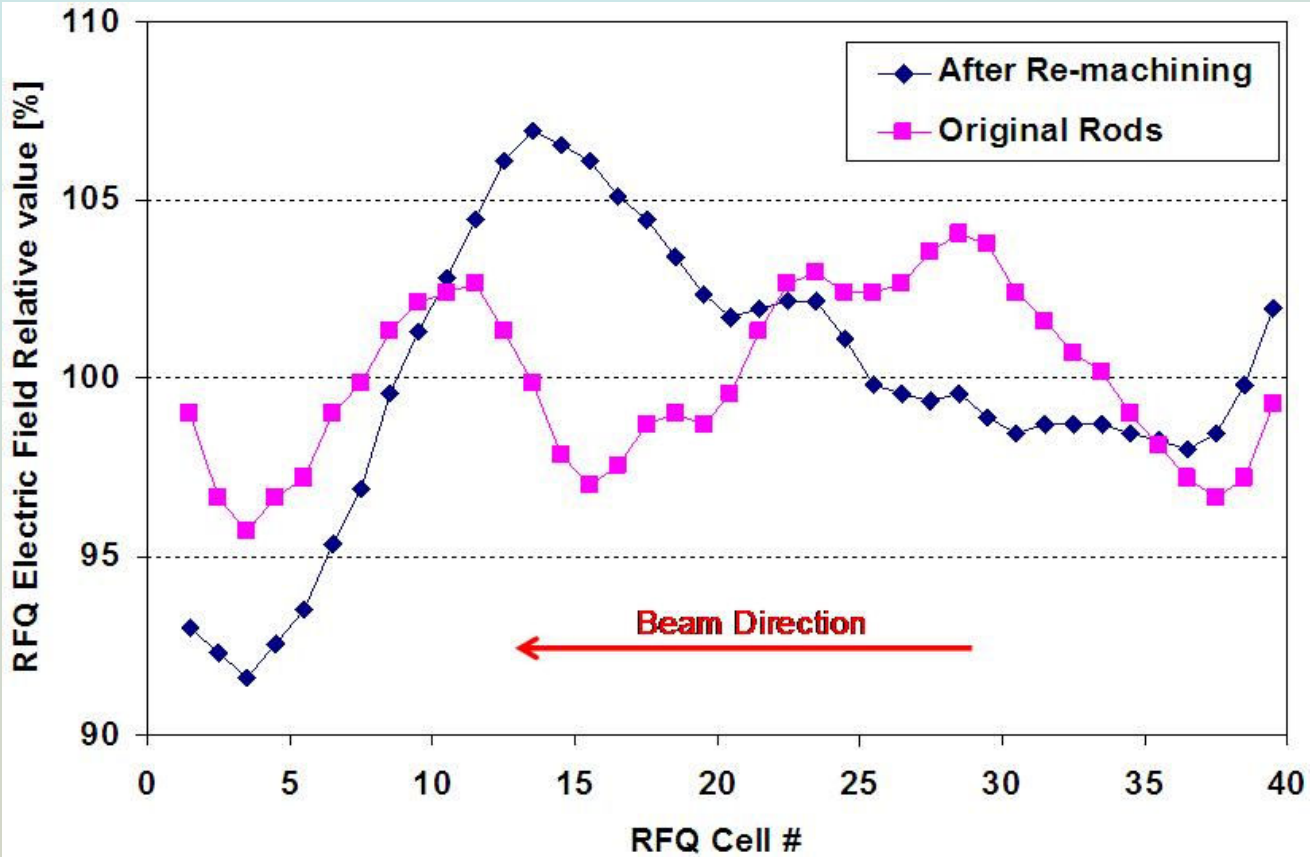

Following the modification of electrodes the frequency correction procedure (moving and removing of tuning plates) changed the field flatness along the 39 RF cells .

This may lead to a transmission reduction and consequently to emittance reduction

LEBT➔ D-plate transmission = 40%

Typical LEBT norm. rms emittance ~ 0.2 π mm mrad ➔ D-plate=0.15 π mm mrad + satellite

Phasing of resonator HWR#1

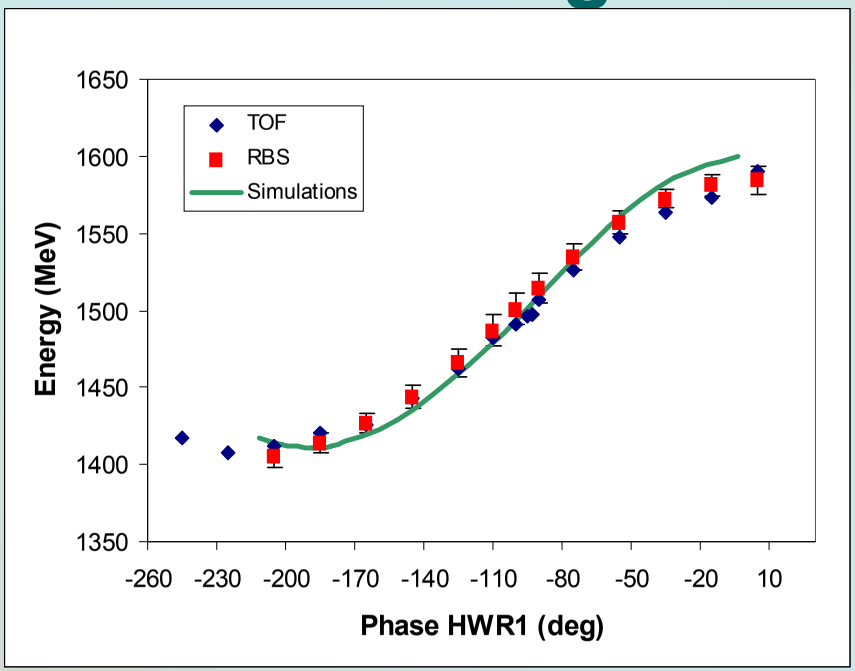

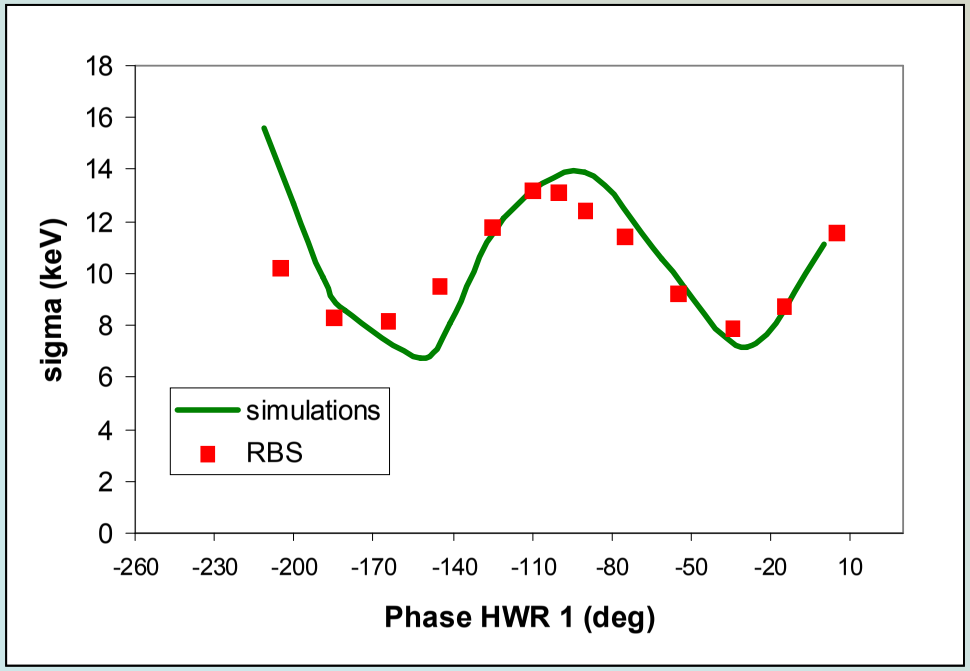

Energy spectra were monitored as a function of phase of an individual HWR while the rest downstream HWRs are detuned. As a result the synchronous phase and resonator voltage can be calibrated. The beam energy obtained from RS is compared with TOF results and TRACK simulation.

The RS measurements provide information on the beam energy spread and low-energy background. The experimental results are compared with TRACK simulation. The intrinsic energy resolution and effects of scattering on the gold foil were not taken in account in the simulation of the beam energy spread.

L.Weissman *et al.* DIPAC 2009
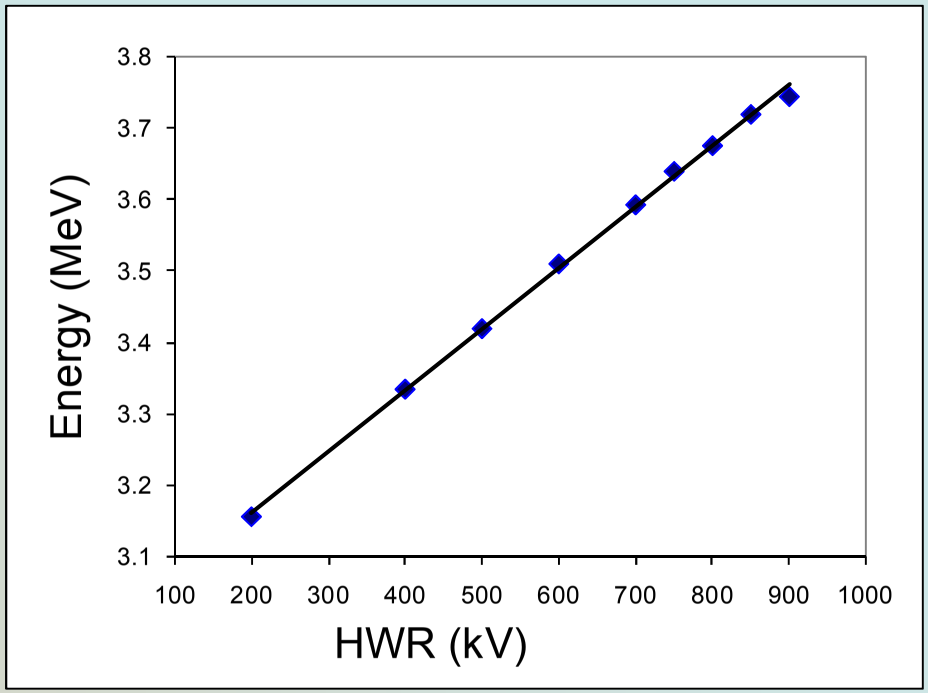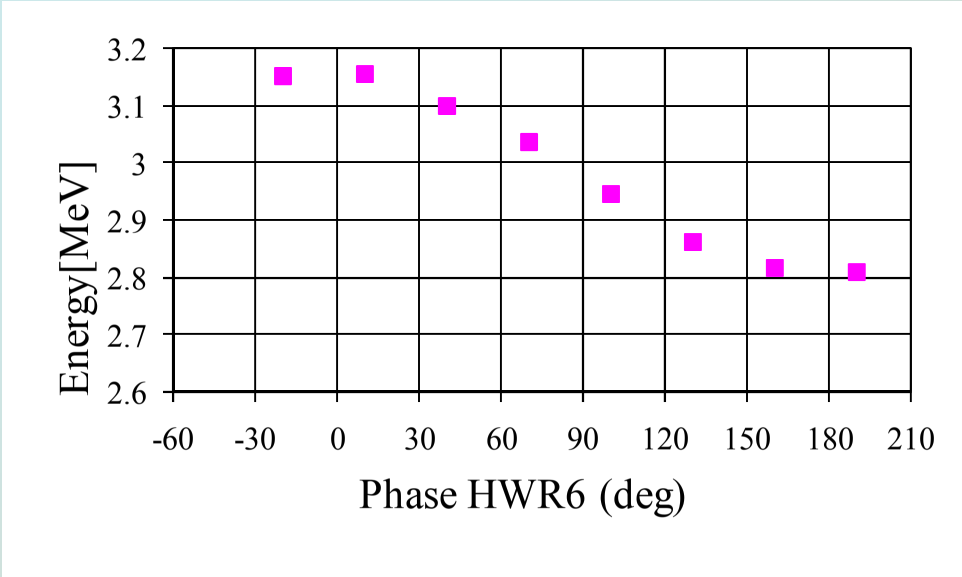
Calibrating cavity #6