Pre-injector Upgrade Updates (13 Apr 2011 – 27 Apr 2011)

C.Y. Tan
27 Apr 2011

News

- Bob Webber gave ok for taking out the HINS source and replacing it with ours.
- New elog for us:

  http://www-bd.fnal.gov/cgi-mach/machlog.pl?nb=injcom

Reminders

- Fill in the MS Project time lines. See Elmie by end of next week
  - Steve Hays
  - Jim Lackey
  - Mike Kucera
  - Dan Bollinger
  - Brian Schupbach
- Fill in paper sections for the review.

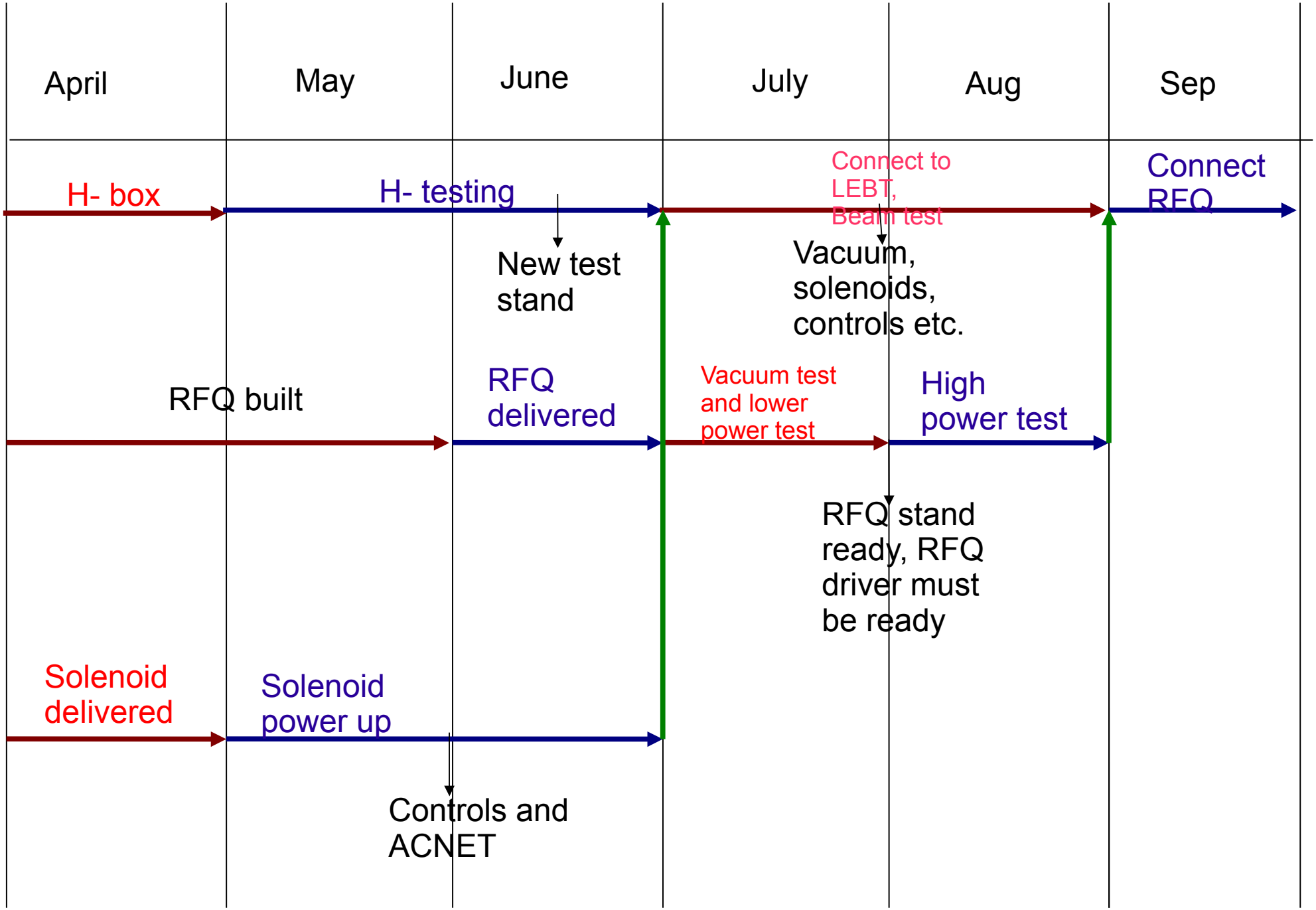
April
May
June
July
Aug
Sep
H- box
H- testing
Connect to LEBT, Beam test
Connect RFQ
New test stand
Vacuum, solenoids, controls etc.
RFQ built
RFQ delivered
Vacuum test and lower power test
High power test
RFQ stand ready, RFQ driver must be ready
Solenoid delivered
Solenoid power up
Controls and ACNET

REV	DESCRIPTION	DRAWN	DATE
		APPROVED	DATE

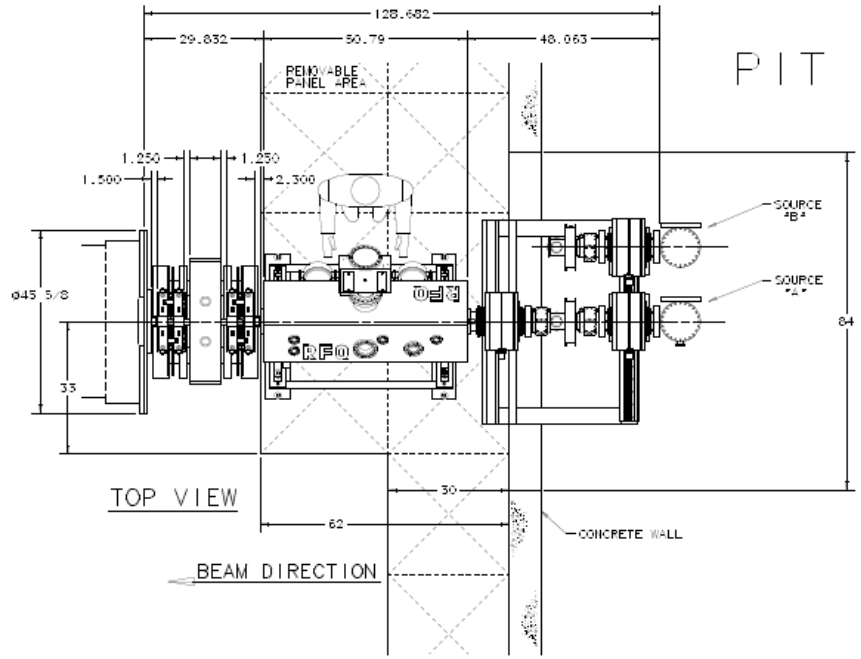

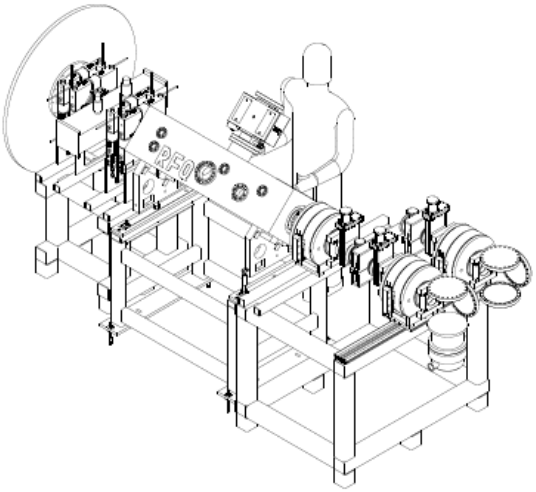

PREACCELERATOR PRELIMINARY LAYOUT

MARCH 30, 2011

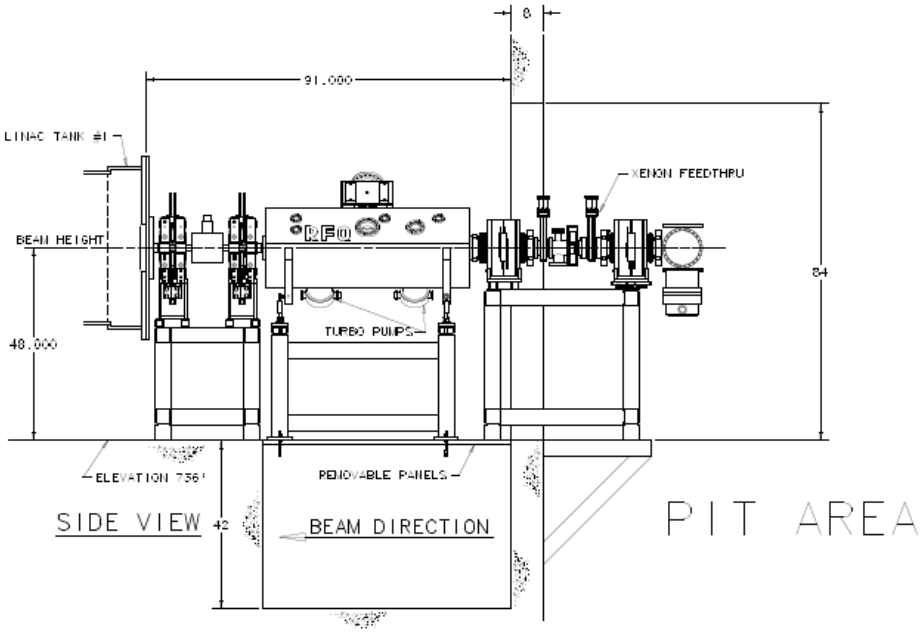

UNLESS OTHERWISE SPECIFIED	ORIGINATOR	
	DRAWN	
± ± ±	CHECKED	
1. BREAK ALL SHARP EDGES	APPROVED	
2. DO NOT SCALE DRAWING	USED ON	
3. DIMENSIONS BASED UPON ASME Y14.5M-1994		
4. MAT'L ALL MACH. SURFACES	MATERIAL	
5. DRAWING UNITS: U.S. INCH		

FERMI NATIONAL ACCELERATOR LABORATORY
UNITED STATES DEPARTMENT OF ENERGY

SCALE	DRAWING NUMBER	SHEET	REV
	. — —	1 OF 1	

CREATED WITH : GROUP:

Source Status

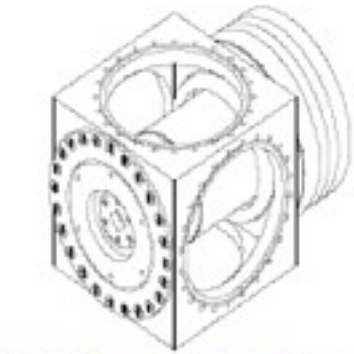

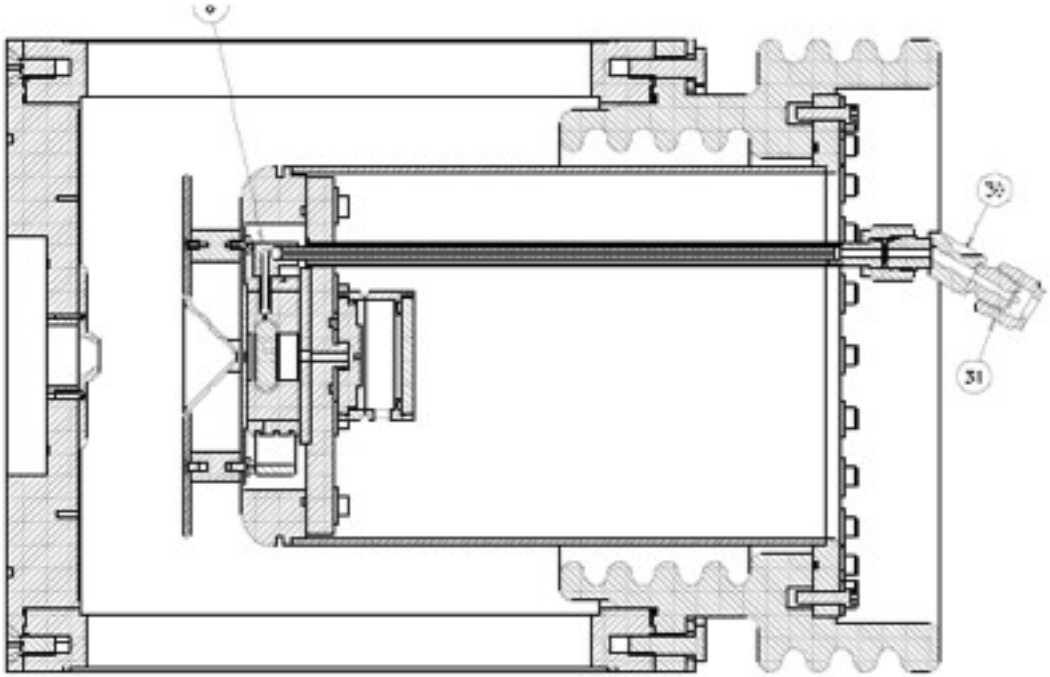

Device	Status	Comments
Source	Drawings completed.	Assembly has started.
Water	I- water tapped off (07 Mar 2010)	See next talk

LEBT Status

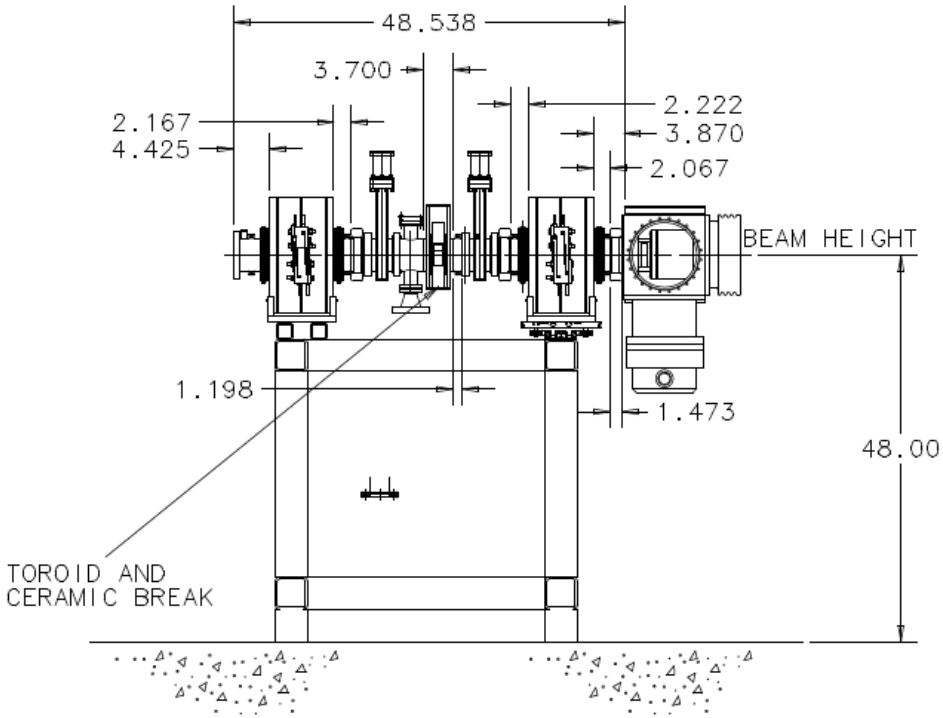

Solenoid PS	Steve Hays has 2	Need to put in inductive feedback loop.
Solenoids	Still being built	See next slide.
LEBT drawings	Being drawn	Complete?
Correctors	final design (07 Mar 2011)	Milhouse still working on drawings and heat calculations.
Vacuum pumps		Order pending

Solenoid status

- #1 fiducials added. Stretch wire measurements and Hall probe measurements, having problems with stepper motors etc.
- #2 is potted.
- #3 is potted?? (no info at this time)
- #4 waiting for parts.

RFQ Status

- Delay in manufacture of electrodes (Most important part!) to Easter week as of 15 Apr.
  - Got first rod on 20 Apr
- Earliest visit date is 8 May.

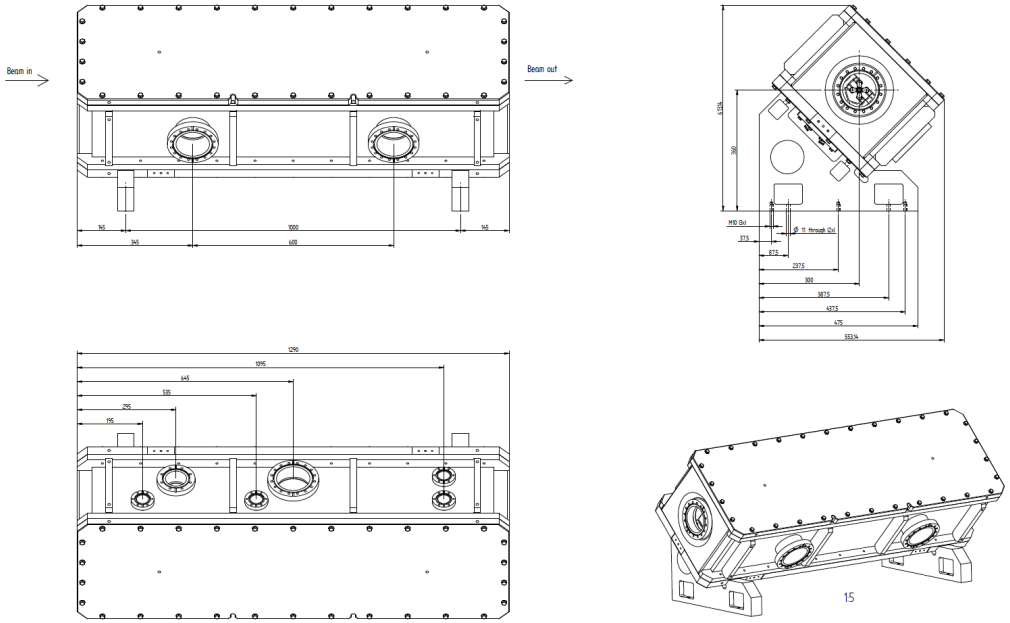

Device	Status	Comments
4816 PA	spigots added to I- line. power outlets done	done as of 1st week of march

MEBT Status

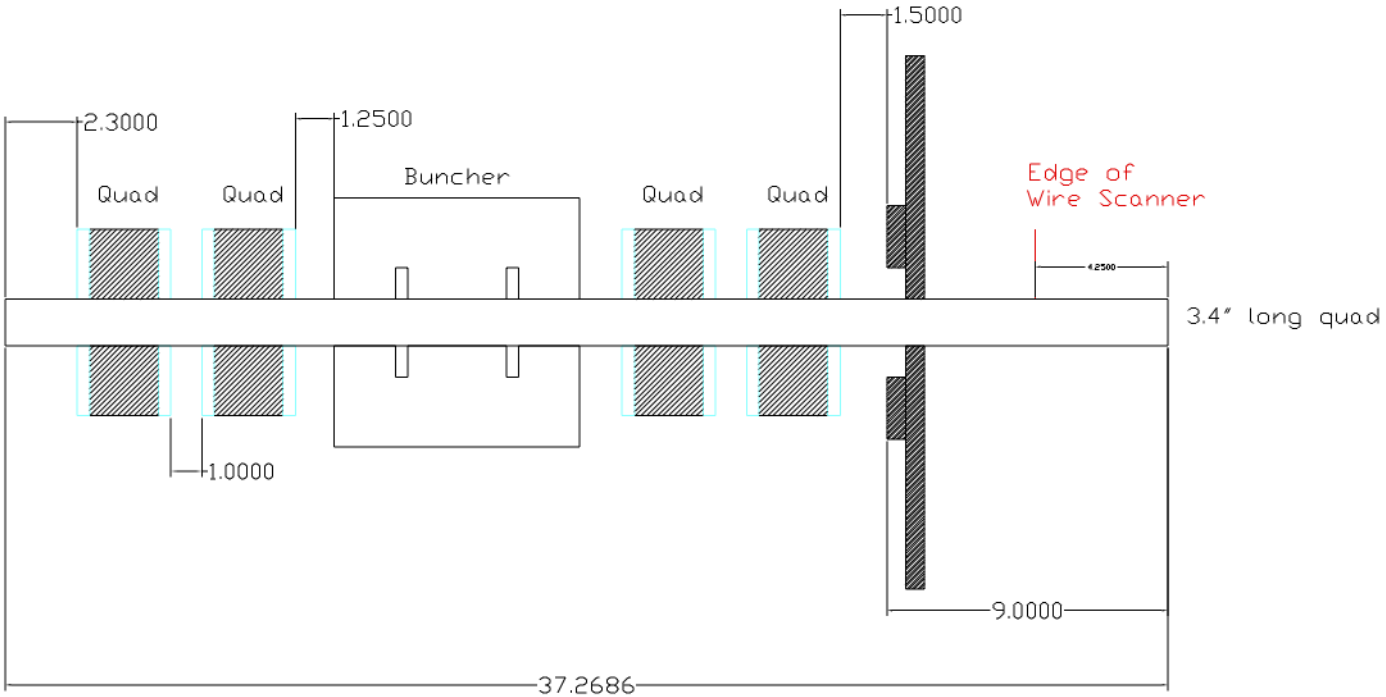

Device	Status	Comments
Quads	3D drawings complete.	Quad reqs have been approved (25 Apr). Quad stands ordered (due 13 June). Quad order+coil (due 16 May). Quad core assembly waiting AD signatures. Coil winding fixtures placed last week.
Buncher	Waiting for bead pull station	Will have all parts by 30 Apr.
Power for quads	Specs to follow	Quads being redone.
Power for buncher		Use present buncher supply in the line.

REV	DESCRIPTION	DRAWN / APPROVED	DATE / DATE
–	ER #9978 NEW RELEASE		

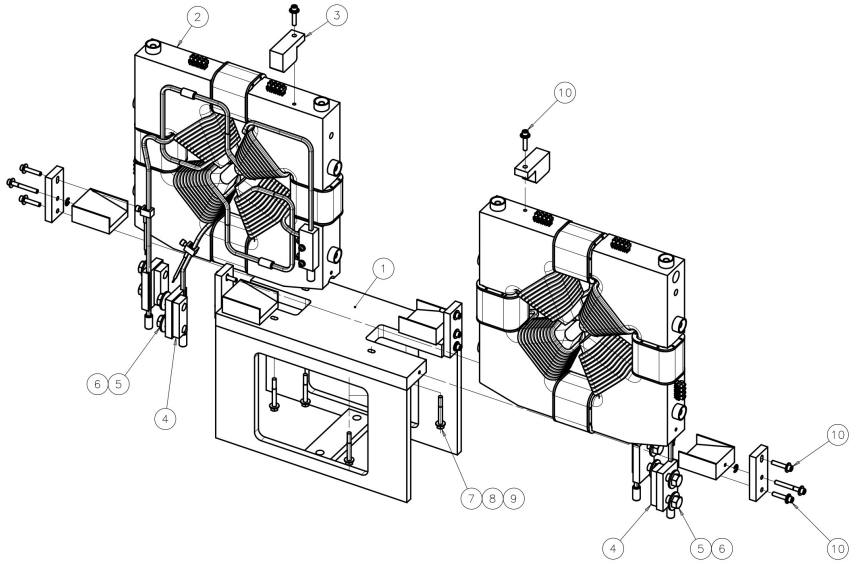

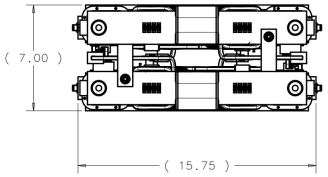

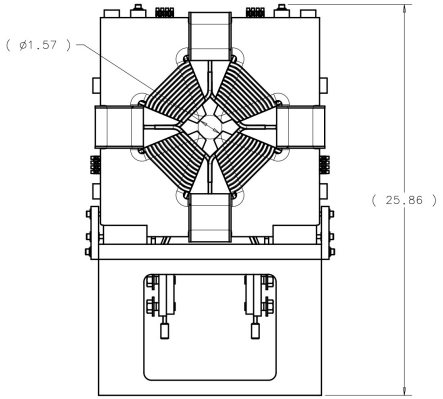

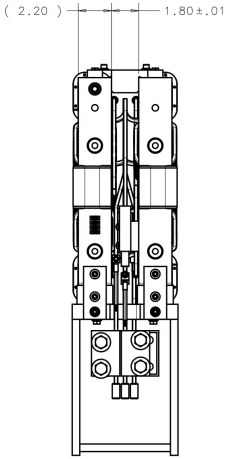

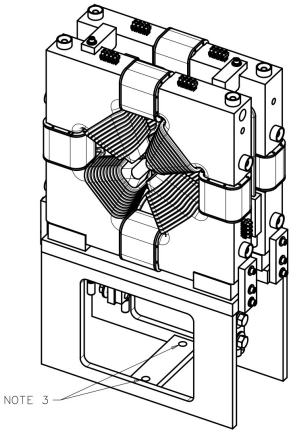

NOTES (UNLESS OTHERWISE SPECIFIED):

1. TWO MAGNETS IN THE DOUBLET SHALL BE MAGNETICALLY ALIGNED AGAINST EACH OTHER USING THE MOUNTING FRAME WEDGES AND SCREWS. AFTER ALIGNMENT, MAGNETS LOCATION SHALL BE FIXED AGAINST THE FRAME WITH SCREWS, ITEM #7.
2. HIPOT ALL COILS TO THE FRAME AND TO EACH OTHER WITH 500 V (CURRENT LEAKAGE SHALL NOT EXCEED 5μA).
3. BOLT ASSEMBLY TO WORK SURFACE DURING TESTING TO AVOID DAMAGE (ASSEMBLY IS TOP HEAVY).

ITEM	PART NO.	DESCRIPTION OR SIZE	QTY.
10	MA-393240	SHCS 1/4-20 X 1-1/4" SS	10
9	MA-338243	1/4" FLAT WASHER SS	10
8	MA-338242	1/4" LOCK WASHER SS	10
7	MA-482545	SCR HEXHD 1/4-20 X 2-1/4" LG SS	4
6	MA-393251	FLAT WASHER, ø.50 STD SST	8
5	MA-369719	SHCS 1/2-13 X 1.50 LG SS	8
4	MB-482593	NUT PLATE	4
3	MB-482592	SPACER CORE-ASSEMBLY	2
2	ME-482591	SINGLE QUADRUPOLE MAGNET ASSY	2
1	MC-482590	MOUNTING FRAME ASSEMBLY	1

PARTS LIST

UNLESS OTHERWISE SPECIFIED		ORIGINATOR	A.MAKAROV	25-FEB-2011
.XX	.XXX	ANGLE	DRAWN	J.KURNAT	28-FEB-2011
± - -	± - -	± - -	CHECKED	D.ARNOLD	08-APR-2011
1. BREAK ALL SHARP EDGES - - MAX.			APPROVED	A.MAKAROV	08-APR-2011
2. DO NOT SCALE DRAWING.			USED ON	
3. DIMENSIONS BASED UPON ASME Y14.5M-1994				
4. MAX. ALL MACH. SURFACES - - √			MATERIAL	SEE PARTS LIST
5. DRAWING UNITS: INCH				

FERMI NATIONAL ACCELERATOR LABORATORY
UNITED STATES DEPARTMENT OF ENERGY

LINAC
PSQA MAGNETS
DOUBLET ASSEMBLY

SCALE	DRAWING NUMBER	SHEET	REV
1:2	5520.000-MD-482589	1 OF 1	

CREATED WITH : Ideas12NXSeries GROUP: TD/DDCIS-DESIGN-COMPUTING

Created: 12:07:14 on 08-04-11 (D-M-Y) By: kurnat State: 1-INITIAL

Controls

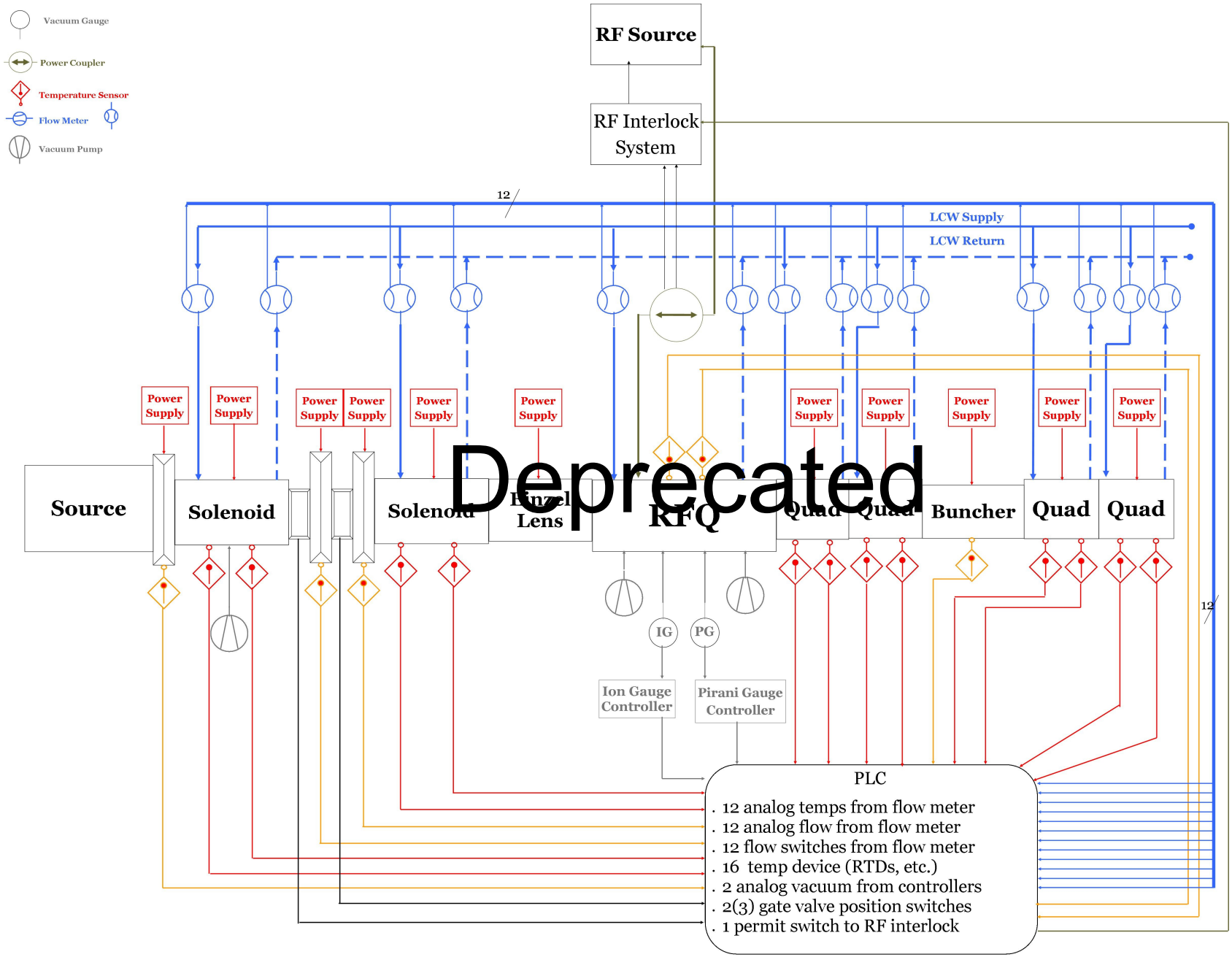

Deprecated

Test Area

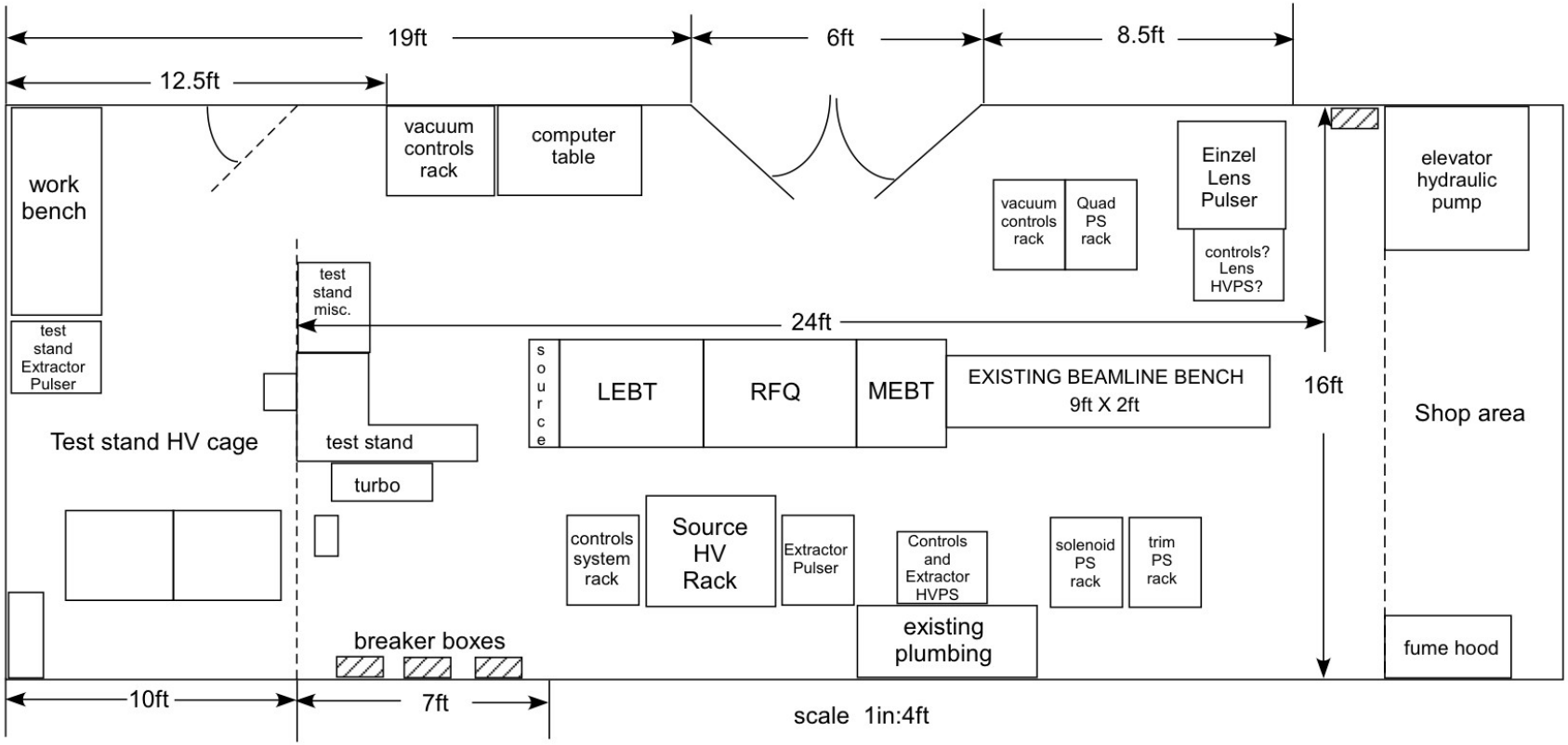
19ft
6ft
8.5ft
12.5ft
work bench
test stand Extractor Pulser
vacuum controls rack
computer table
vacuum controls rack
Quad PS rack
Einzel Lens Pulser
controls? Lens HVPS?
elevator hydraulic pump
test stand misc.
24ft
source
LEBT
RFQ
MEBT
EXISTING BEAMLINE BENCH 9ft X 2ft
16ft
Shop area
Test stand HV cage
test stand
turbo
controls system rack
Source HV Rack
Extractor Pulser
Controls and Extractor HVPS
solenoid PS rack
trim PS rack
existing plumbing
breaker boxes
fume hood
10ft
7ft
scale 1in:4ft

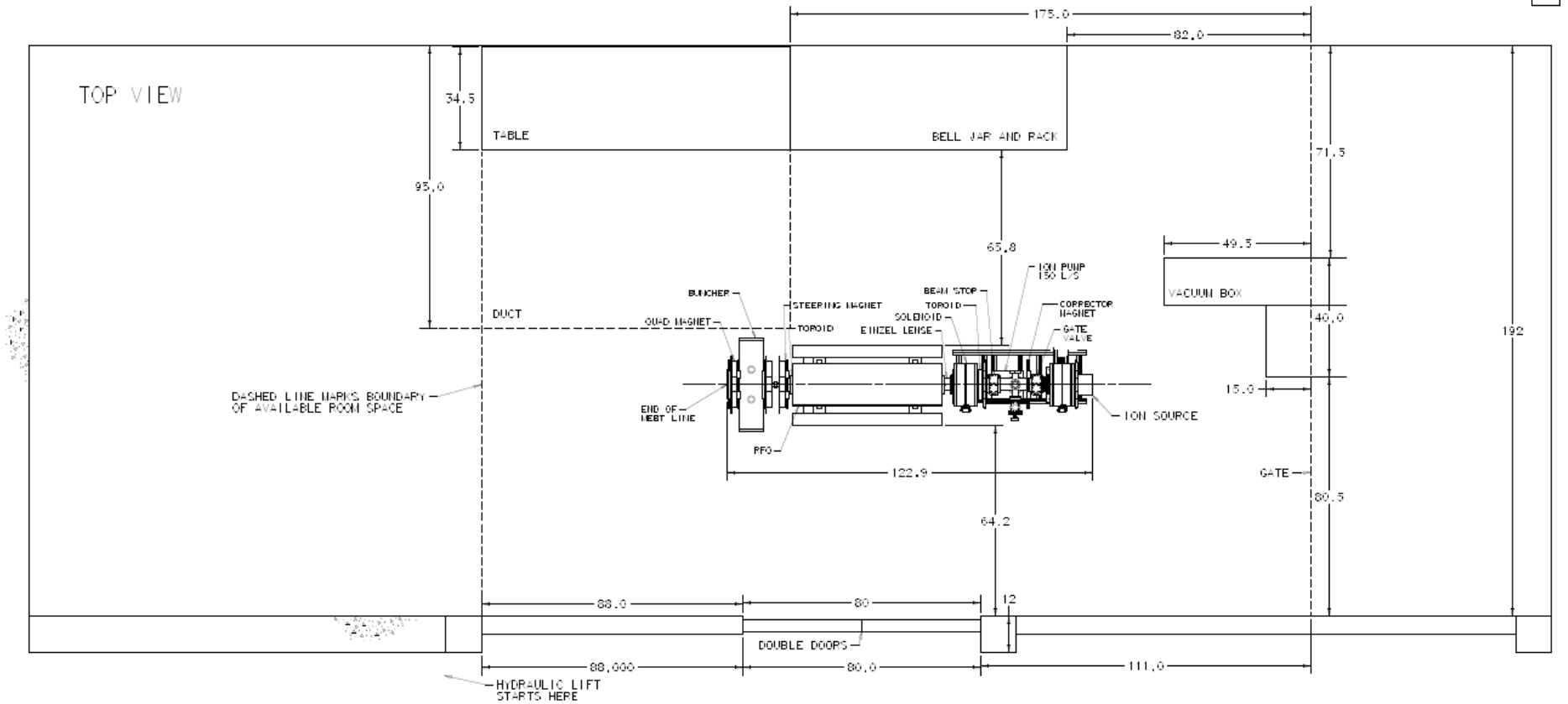
TOP VIEW
175.0
82.0
34.5
TABLE
BELL JAR AND RACK
71.5
95.0
65.8
49.5
ION PUMP
150 L/S
VACUUM BOX
BUNCHER
STEERING MAGNET
BEAM STOP
TOROID
CORRECTOR
MAGNET
DUCT
QUAD MAGNET
TOROID
SOLENOID
EINZEL LENSE
GATE
VALVE
40.0
192
DASHED LINE MARKS BOUNDARY
OF AVAILABLE ROOM SPACE
END OF
MEBT LINE
15.0
ION SOURCE
PFO
122.9
GATE
80.5
64.2
88.0
80
12
DOUBLE DOORS
88.000
80.0
111.0
HYDRAULIC LIFT
STARTS HERE

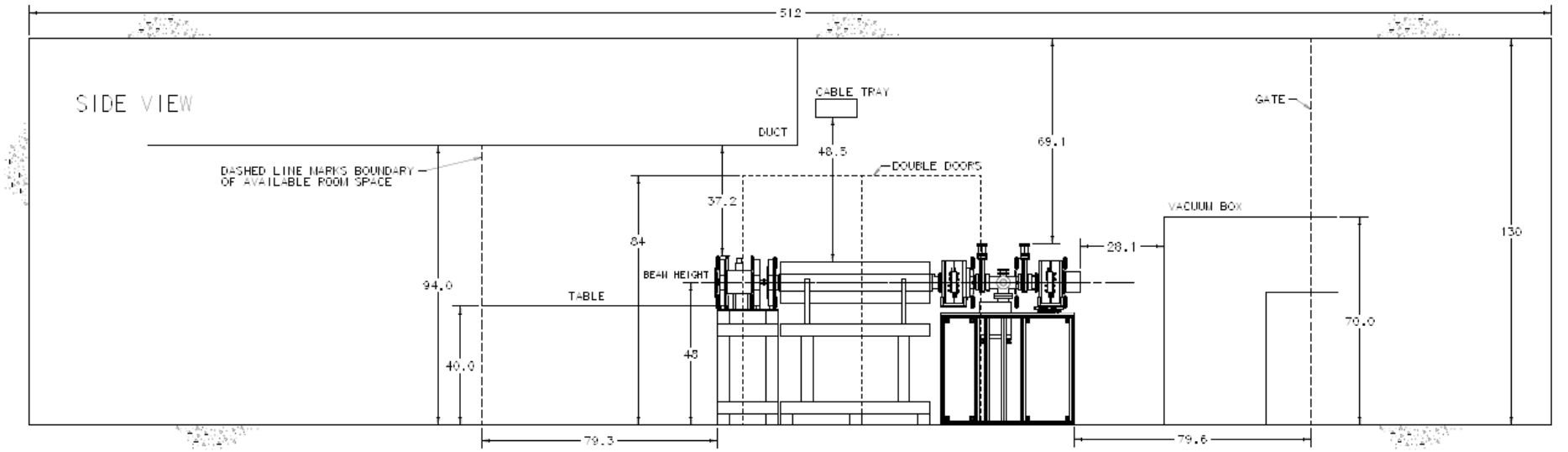
512
SIDE VIEW
CABLE TRAY
GATE
DUCT
48.5
69.1
DASHED LINE MARKS BOUNDARY
OF AVAILABLE ROOM SPACE
DOUBLE DOORS
37.2
VACUUM BOX
84
28.1
130
BEAM HEIGHT
94.0
TABLE
70.0
48
40.0
79.3
79.6

Safety

- When can the beam line layout in test area be done?

RFQ reminders

- <u>Schempp is vendor</u>
  - Make sure that the vanes are cleaned! See ISIS email.
    - Some cleaning details supplied by ISIS.
  - Review and verify on site mechanical design and construction (already in contract).