Pre-injector Upgrade Updates (27 Apr 2011 – 11 May 2011)

C.Y. Tan

11 May 2011

News

- Going to Germany 25 May to inspect RFQ.
- Mary Convery volunteered to be shutdown coordinator.

Reminders

- Fill in the MS Project time lines. See Elmie.
  - Steve Hays
  - Jim Lackey
  - Mike Kucera
  - Dan Bollinger
  - Brian Schupbach
- Fill in paper sections for the review.

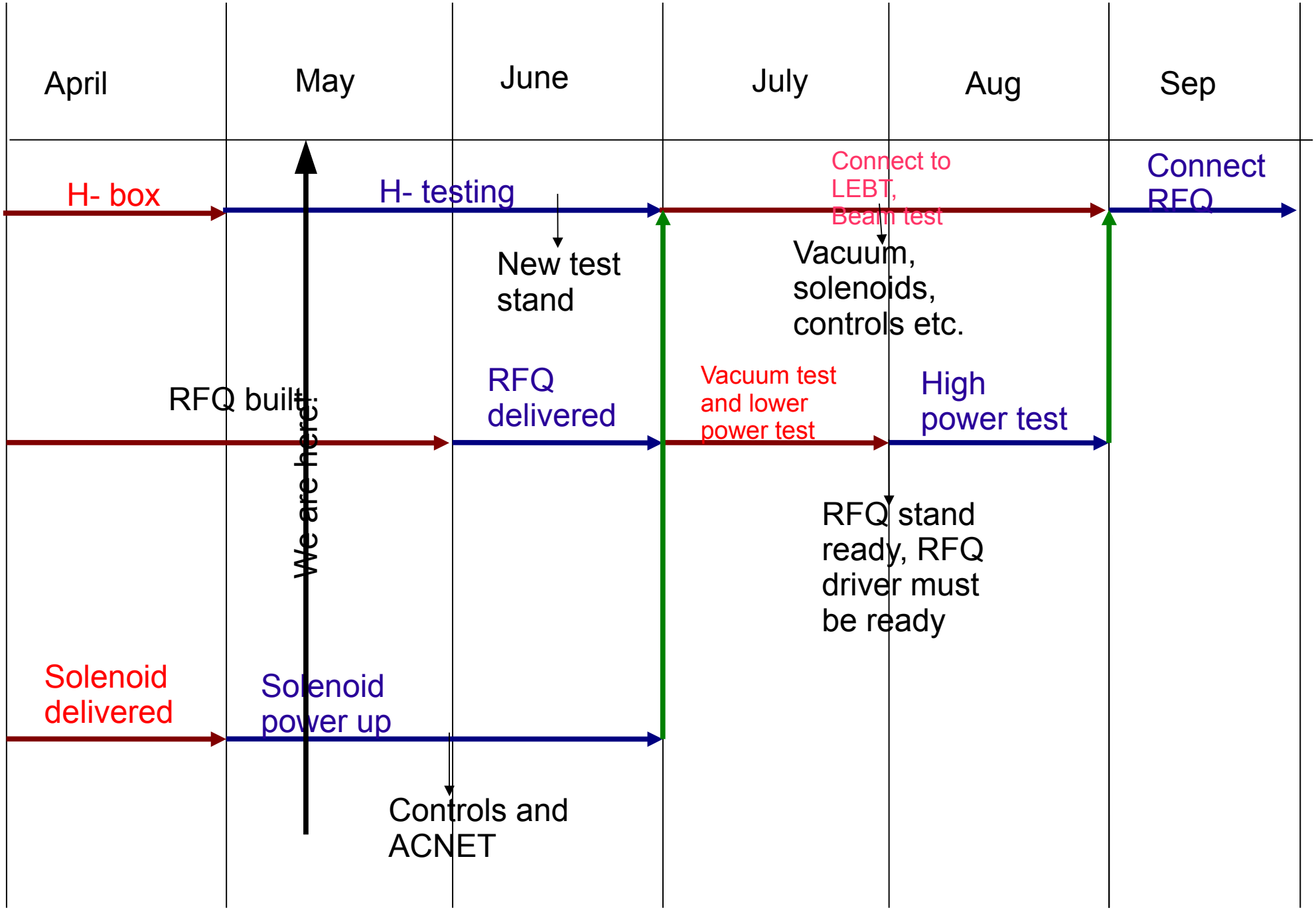
April
May
June
July
Aug
Sep
H- box
H- testing
Connect to LEBT, Beam test
Connect RFQ
New test stand
Vacuum, solenoids, controls etc.
RFQ built
RFQ delivered
Vacuum test and lower power test
High power test
We are here
RFQ stand ready, RFQ driver must be ready
Solenoid delivered
Solenoid power up
Controls and ACNET

REV	DESCRIPTION	DRAWN	DATE
		APPROVED	DATE

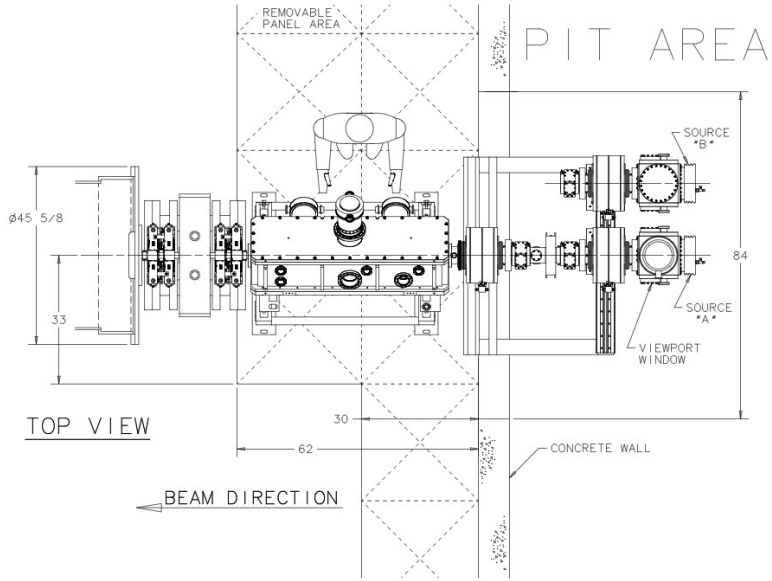

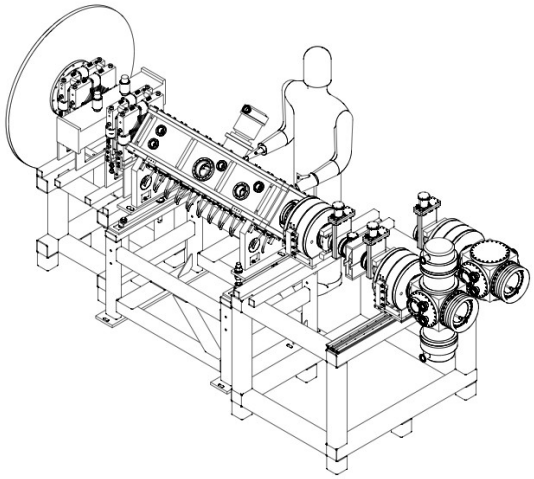

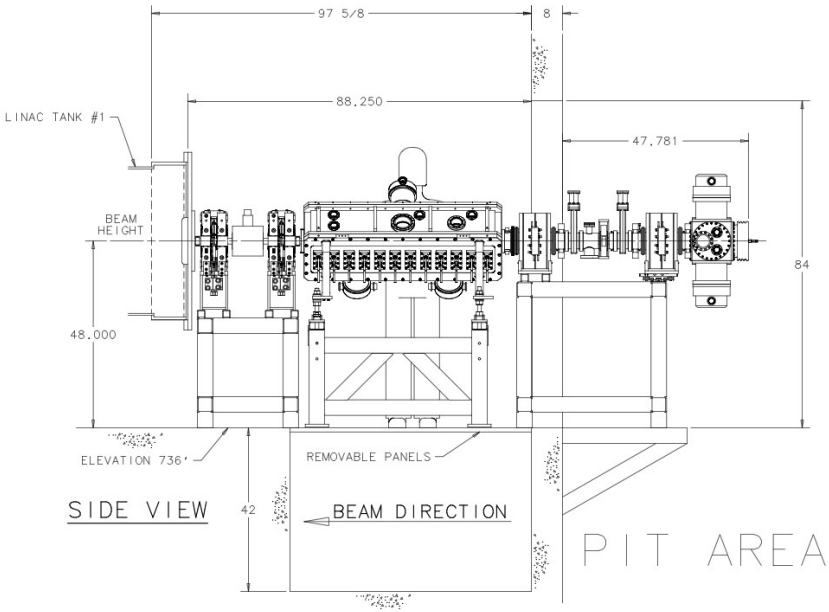

PREACCELERATOR PRELIMINARY LAYOUT

APRIL 27, 2011

UNLESS OTHERWISE SPECIFIED		ORIGINATOR	
		DRAWN	
± ± ±		CHECKED	
1. BREAK ALL SHARP EDGES MAX.		APPROVED	
2. DO NOT SCALE DRAWING. 3. DIMENSIONS BASED UPON ASME Y14.5M-1994 4. MAX. ALL MACH. SURFACES		USED ON	
5. DRAWING UNITS: U.S. INCH		MATERIAL	

FERMI NATIONAL ACCELERATOR LABORATORY
UNITED STATES DEPARTMENT OF ENERGY

SCALE	DRAWING NUMBER	SHEET	REV
	. — —	1 OF 1	
CREATED WITH :		GROUP:	

Created: 13:37:03 on 28-04-11 (D-M-Y) By: mkielar State: 1-INITIAL

Source Status

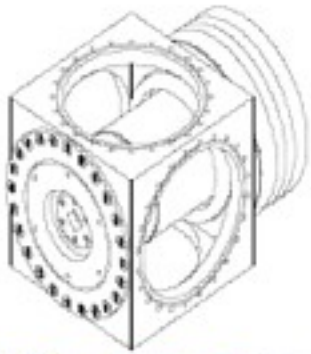

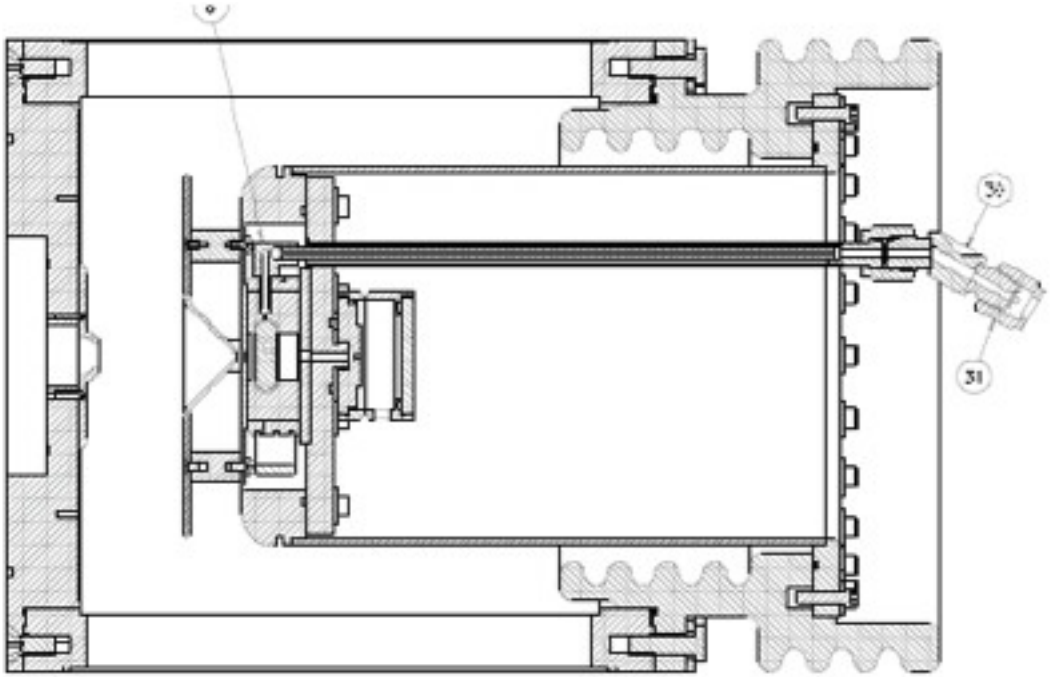

Device	Status	Comments
Source	Installed in test stand. Conditioning as of 04 May.	New Cs boiler valve had a leak, using HINS boiler.
Water	I- water tapped off (07 Mar 2010)	See next talk

LEBT Status

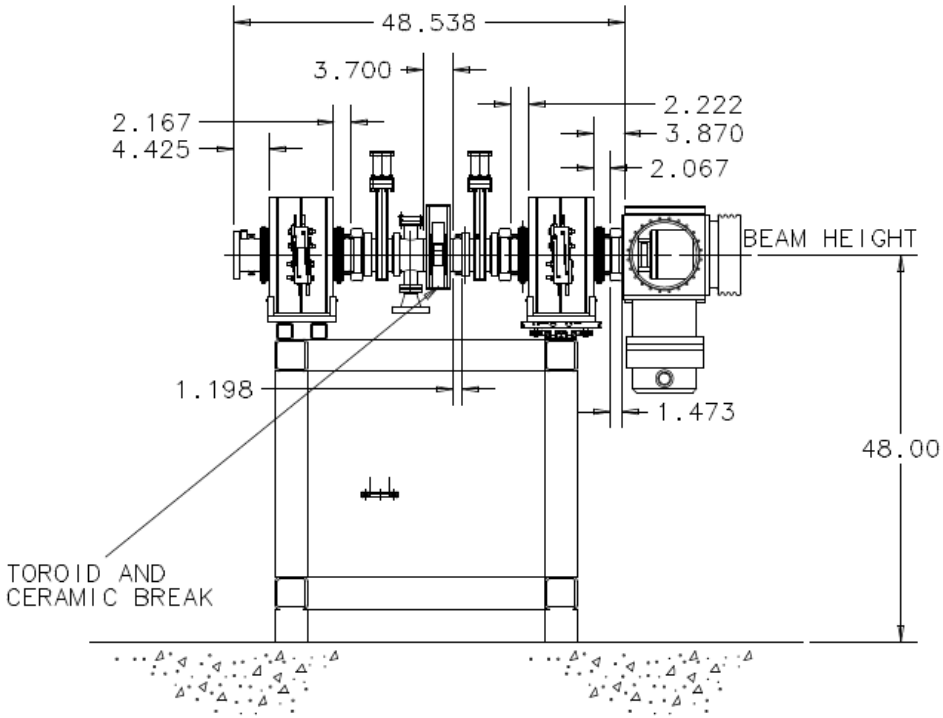

Solenoid PS	Steve Hays has 2	Need to put in inductive feedback loop.
Solenoids	Only #4 is incomplete.	See next slide.
LEBT drawings	Being drawn	Complete?
Correctors	final design (07 Mar 2011)	Milhouse still working on drawings and heat calculations.
Vacuum pumps		Order pending
Einzel lens	Complete!	

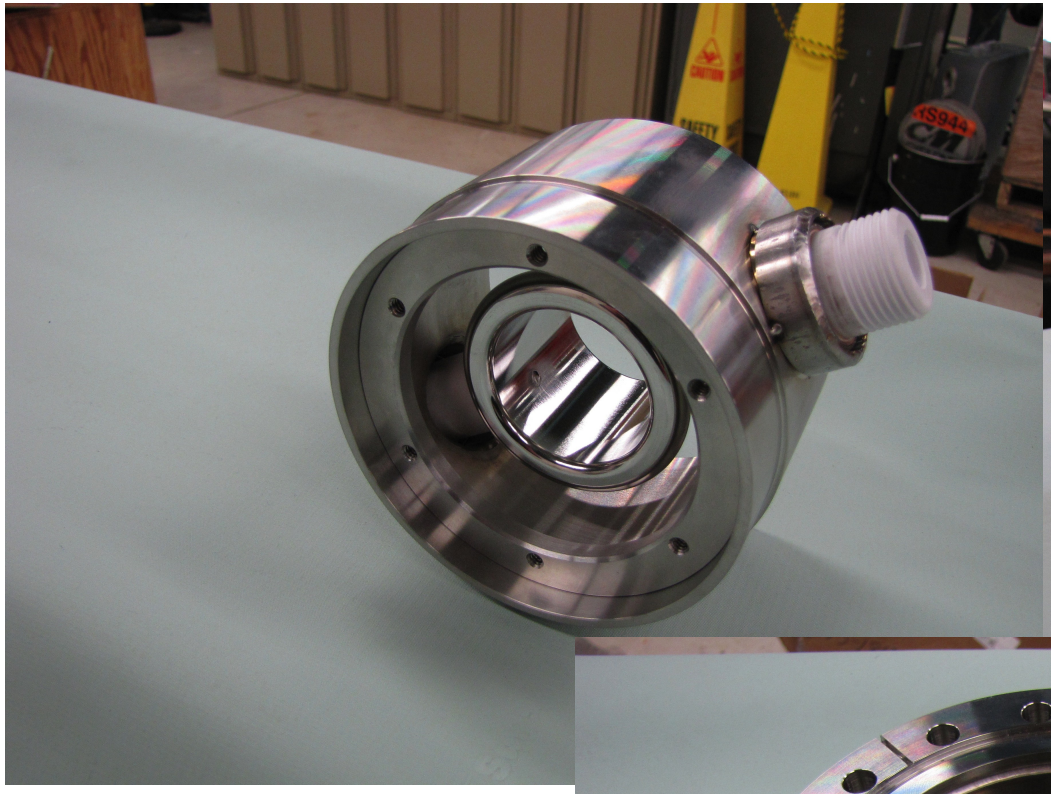

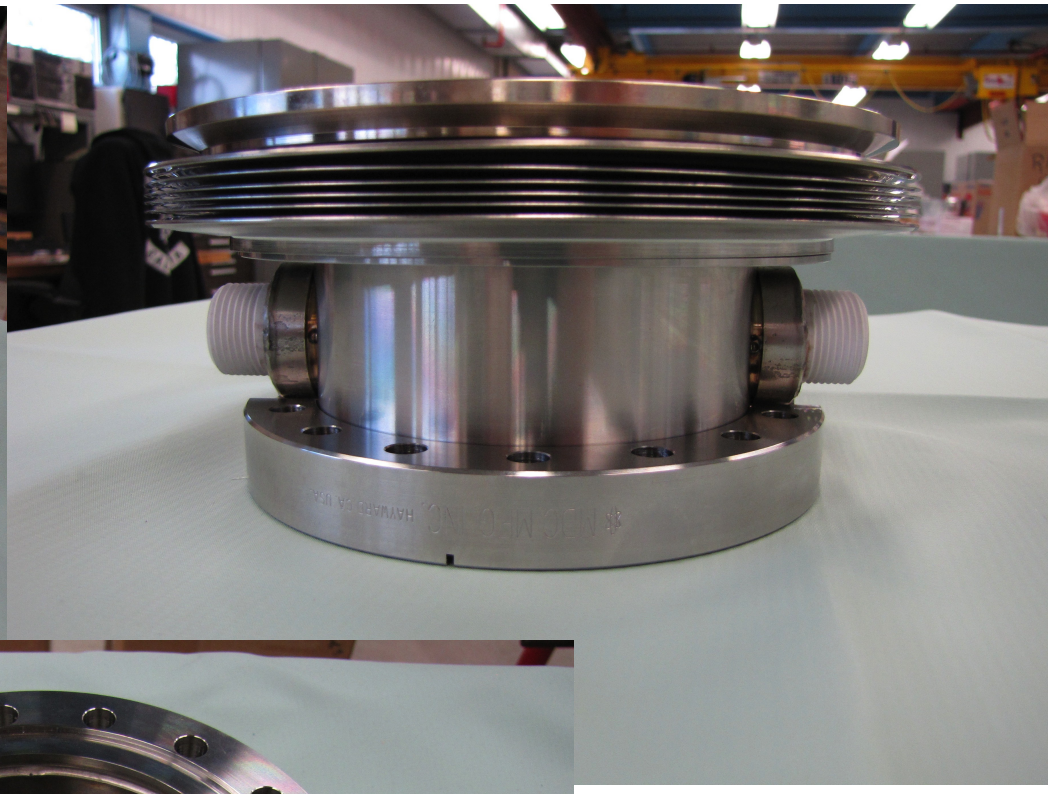

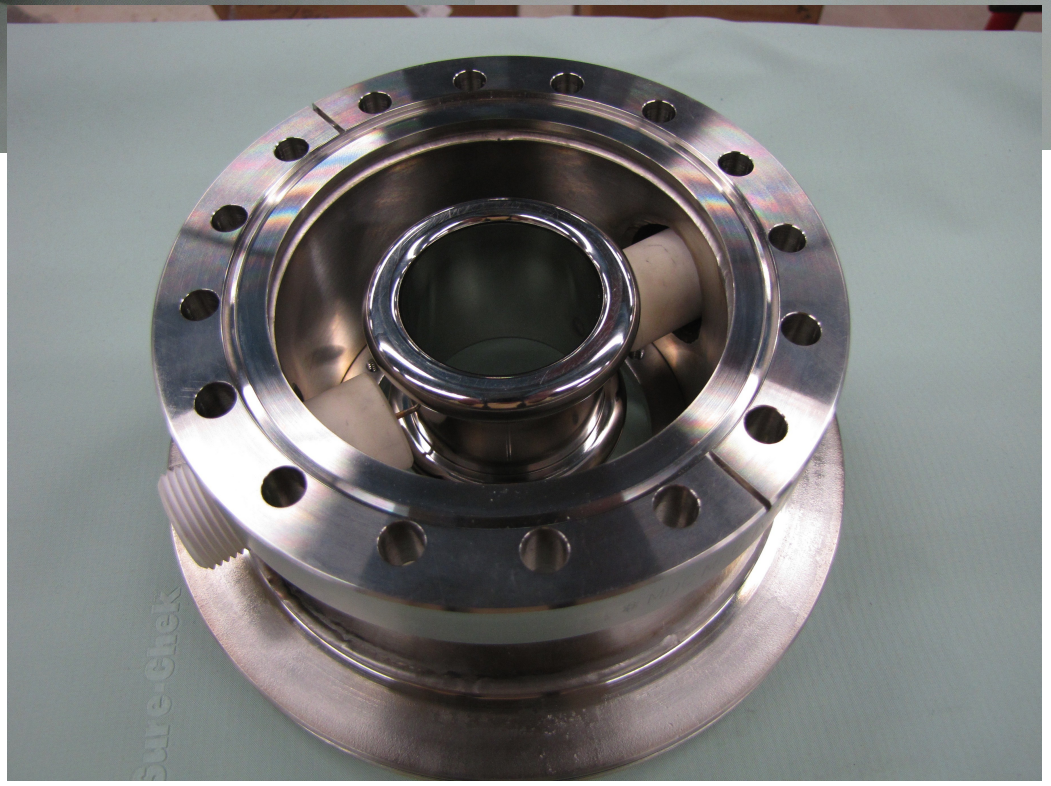

The Einzel Lens Chopper. Done!

Solenoid status

- #1 Measurements are complete. See next slide.
- #2 waiting to be measured.
- #3 is potted.
- #4 waiting for parts.

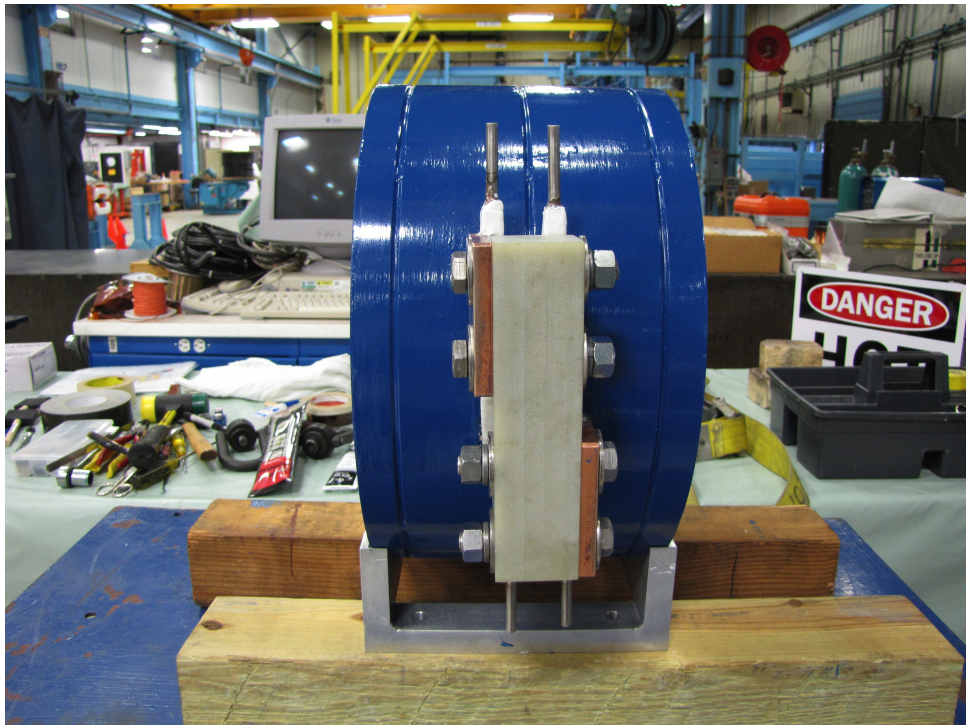
DANGER

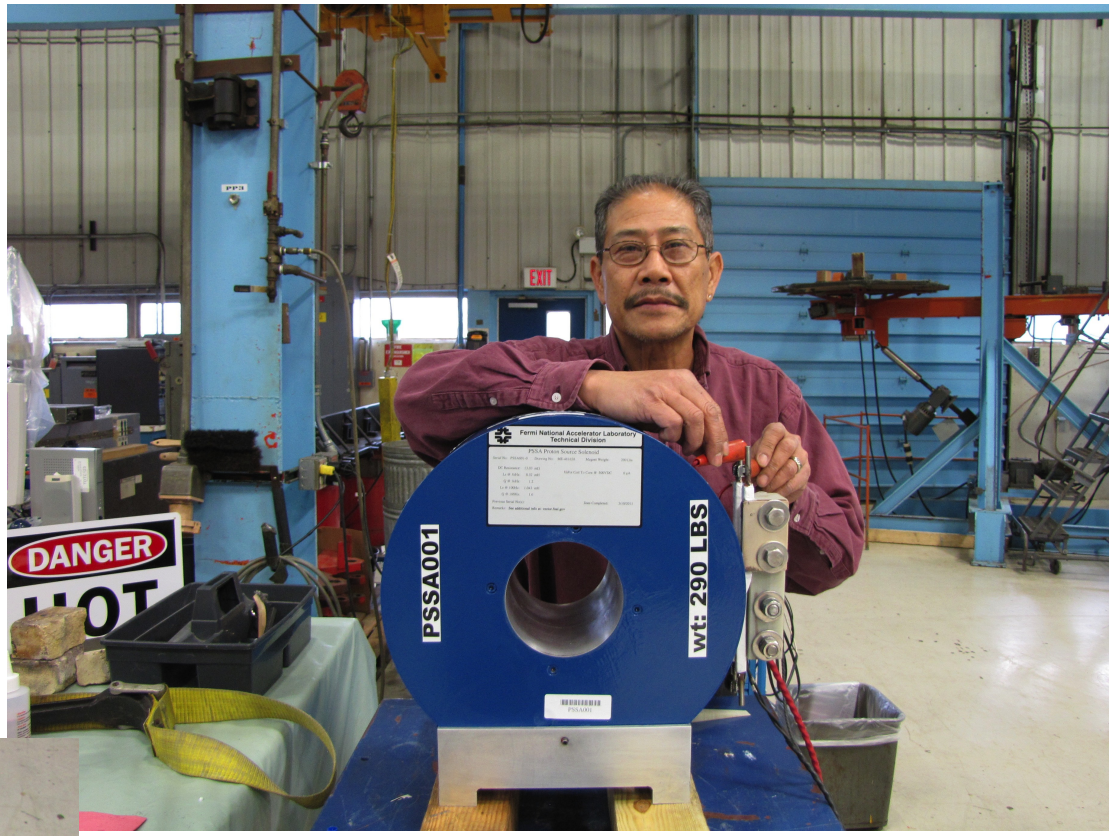
EXIT
DANGER
HOT
Fermi National Accelerator Laboratory
Technical Division
PSSA Proton Source Solenoid
PSSA001
wt: 290 LBS

LINAC SOLENOID MAGNET
PSSA001
wt: 290 LBS
PSSA001
Fermi National Accelerator Laboratory
Technical Division
PSSA Proton Source Solenoid
PSSA001
wt: 290 LBS

3-D Hall Probe

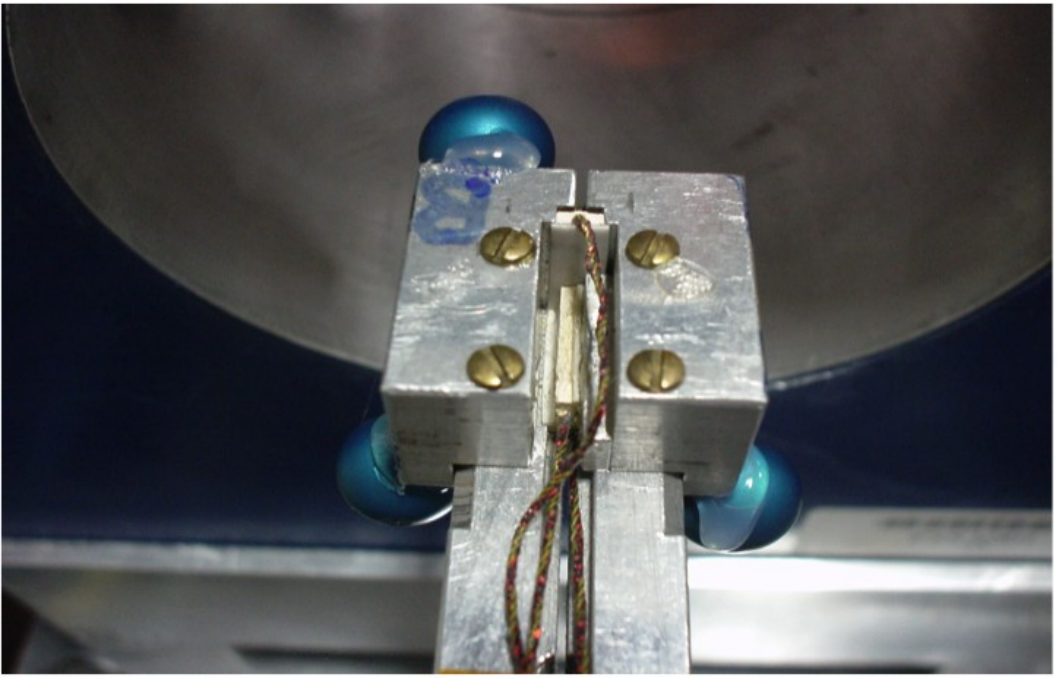

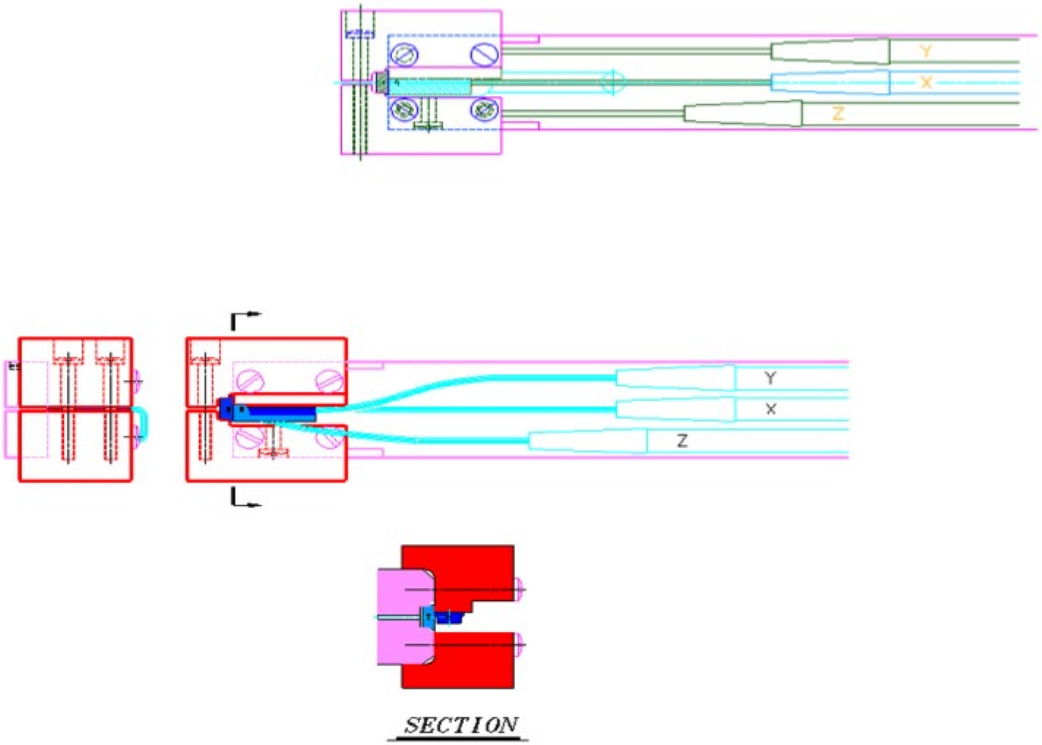

Some Solenoid Measured Data

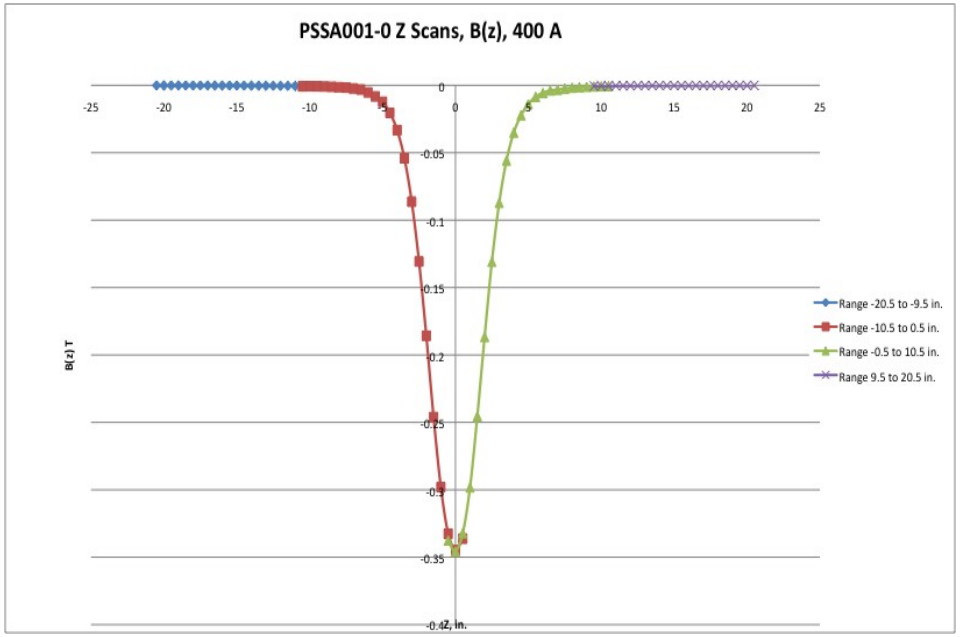

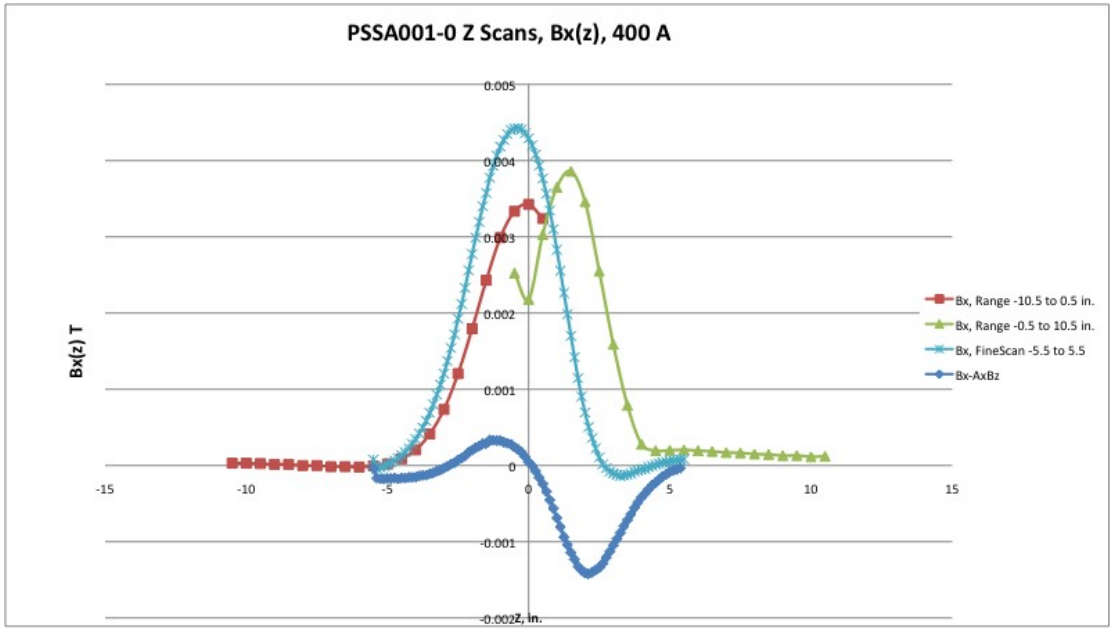

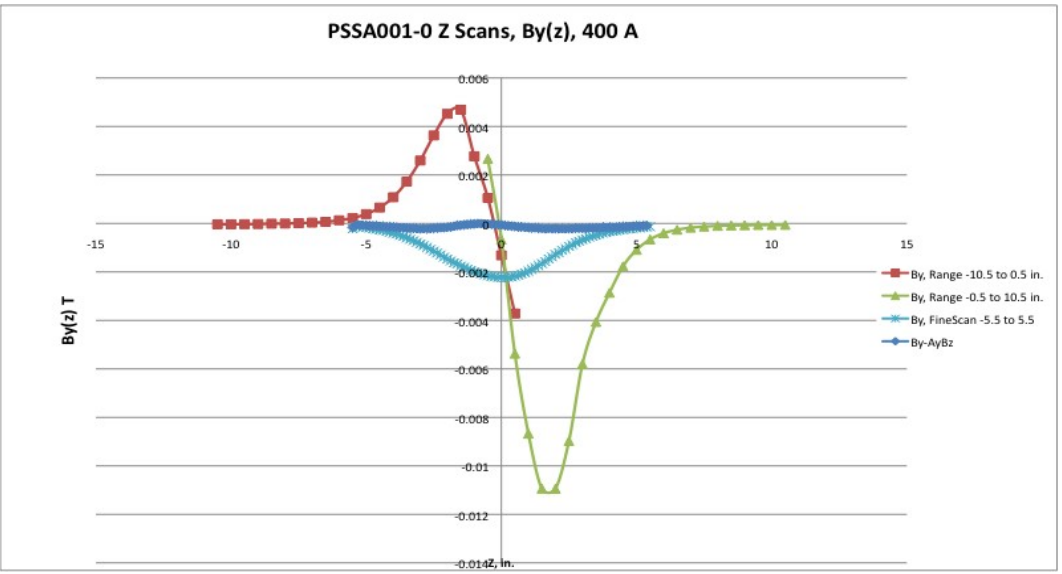

R=0 measurements.
Note that Bx is larger than By at r=0.

Br data

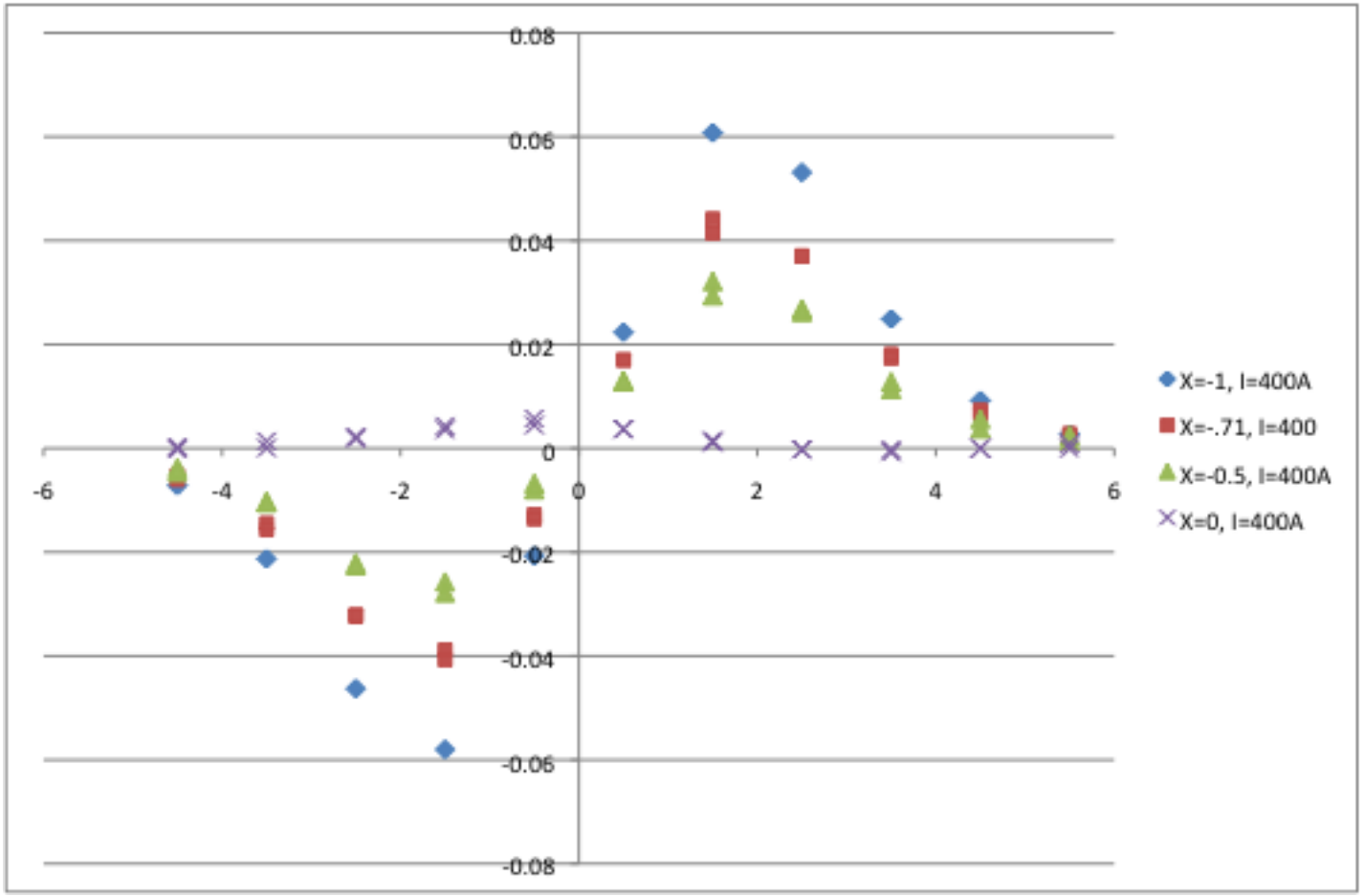
0.08
0.06
0.04
0.02
0
-0.02
-0.04
-0.06
-0.08
-6
-4
-2
0
2
4
6
X=-1, I=400A
X=-.71, I=400
X=-0.5, I=400A
X=0, I=400A

Tilts

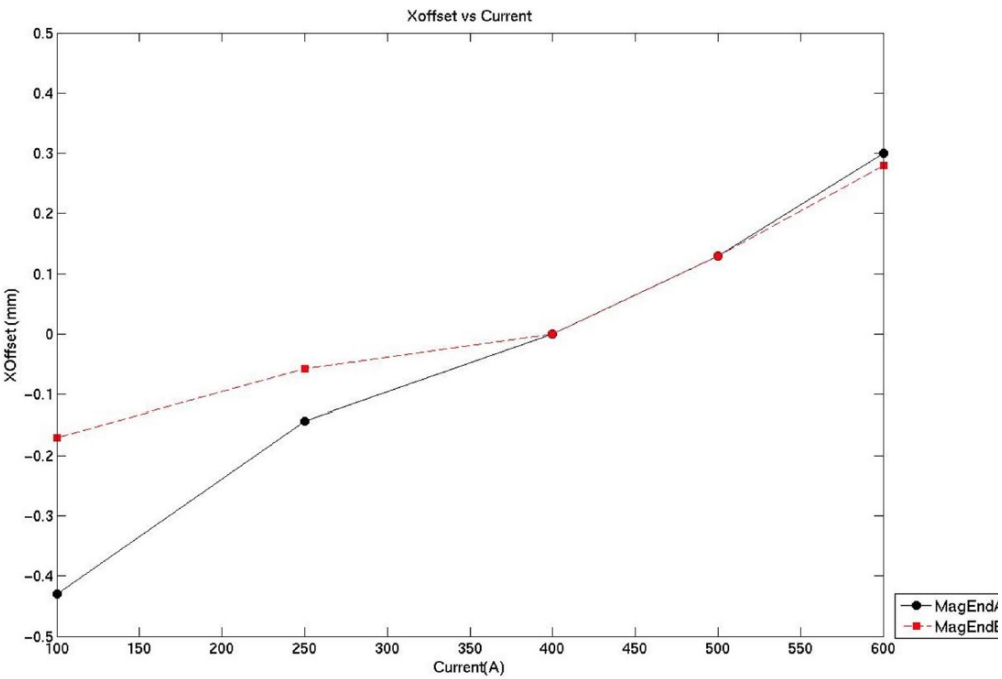

X off set moves as a function of current!

Probably be running at > 500A. So there is a x POSITION offset (and possibly an angle change) of the electrical centre as the current is increased from 500A.

Centre changes by 0.175mm going from 500A to 600A. Assume angular change is zero.

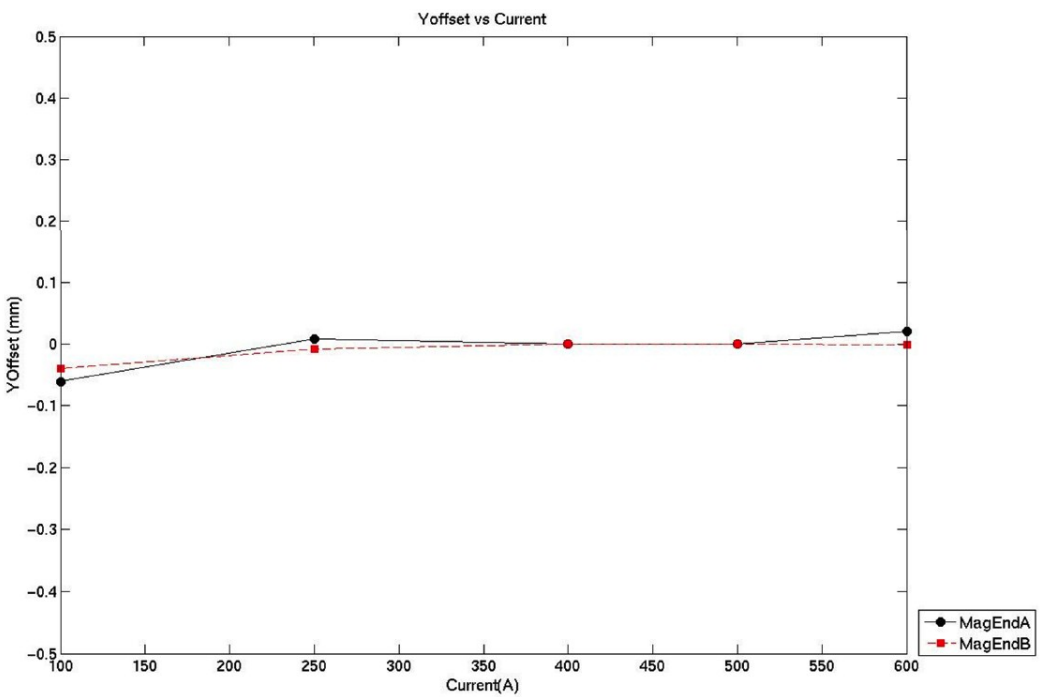

Quick Checks

- Using the Bz data, I have verified that that
  - Focal length of solenoid at 500A is 18.7cm which is approximately what we had expected (20 cm). Note: have to do a rescaling because measurements are at 400A.
- Will check corrector strengths once I get the distances of correctors from solenoids. Suspect that strength should be OK.

RFQ Status

- 2 rods done (03 May 2011)
- Stand drawings being finalised.
- Visit on 25 - 29 May.
- Coupling β (min) = 1.43.
- RFQ NEEDS WATER. (06 May 2011)
  - each stem is cooled from the outside - no water vacc brazings they all can be made in series, its no real cooling, its temperature stabilizing.

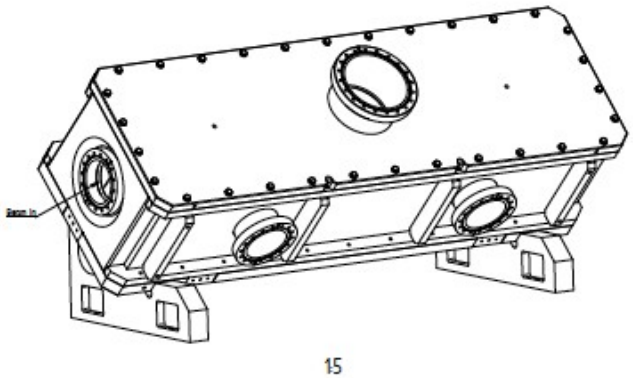

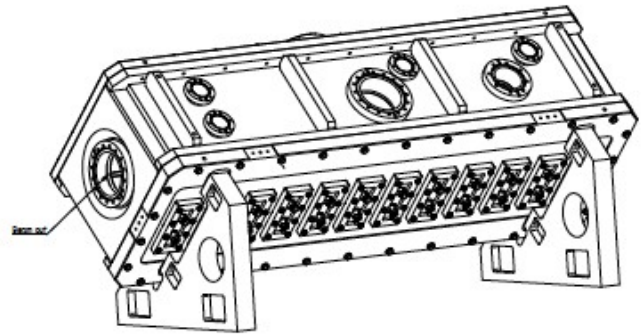

RFQ ordered on 19 May 2010. Nearly 1 year ago today!

Device	Status	Comments
4816 PA	spigots added to I- line. power outlets done	done as of 1st week of march

The 2 rods

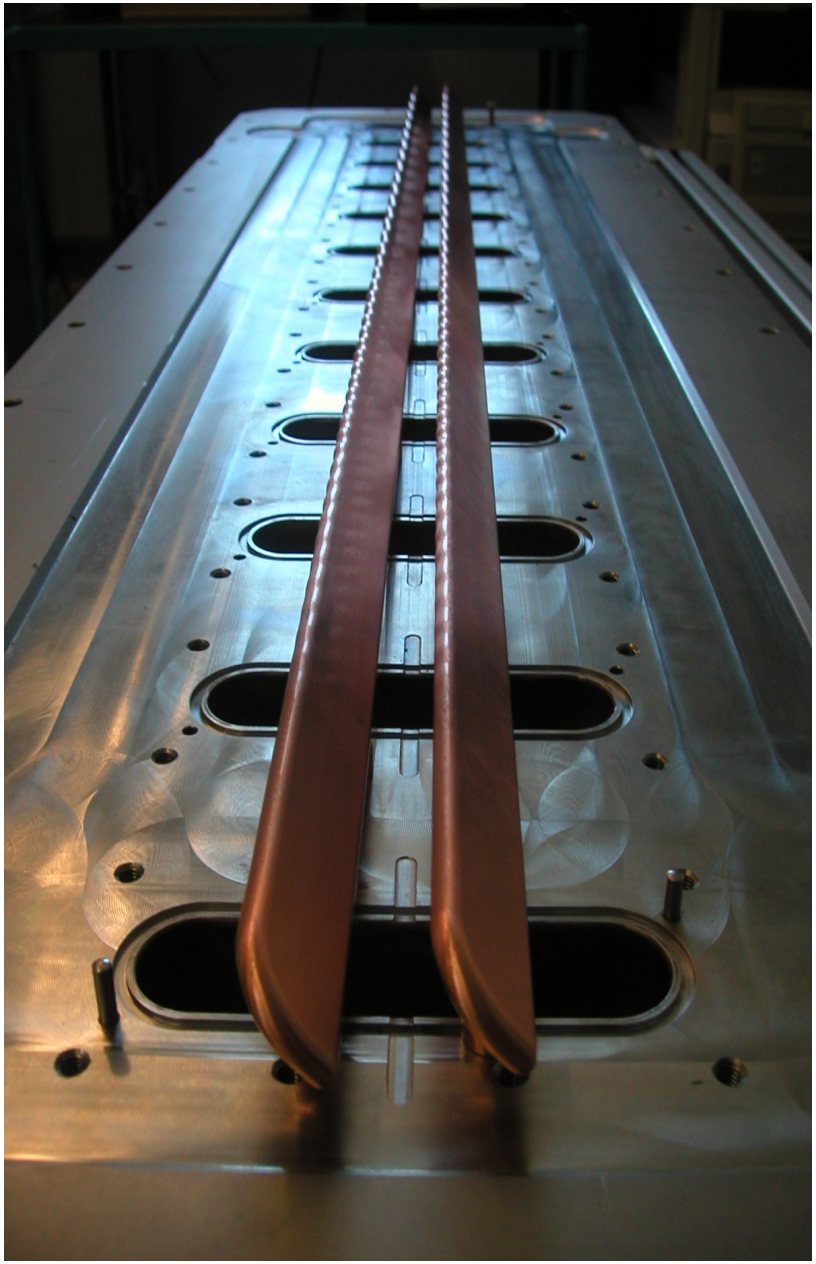

HURCO

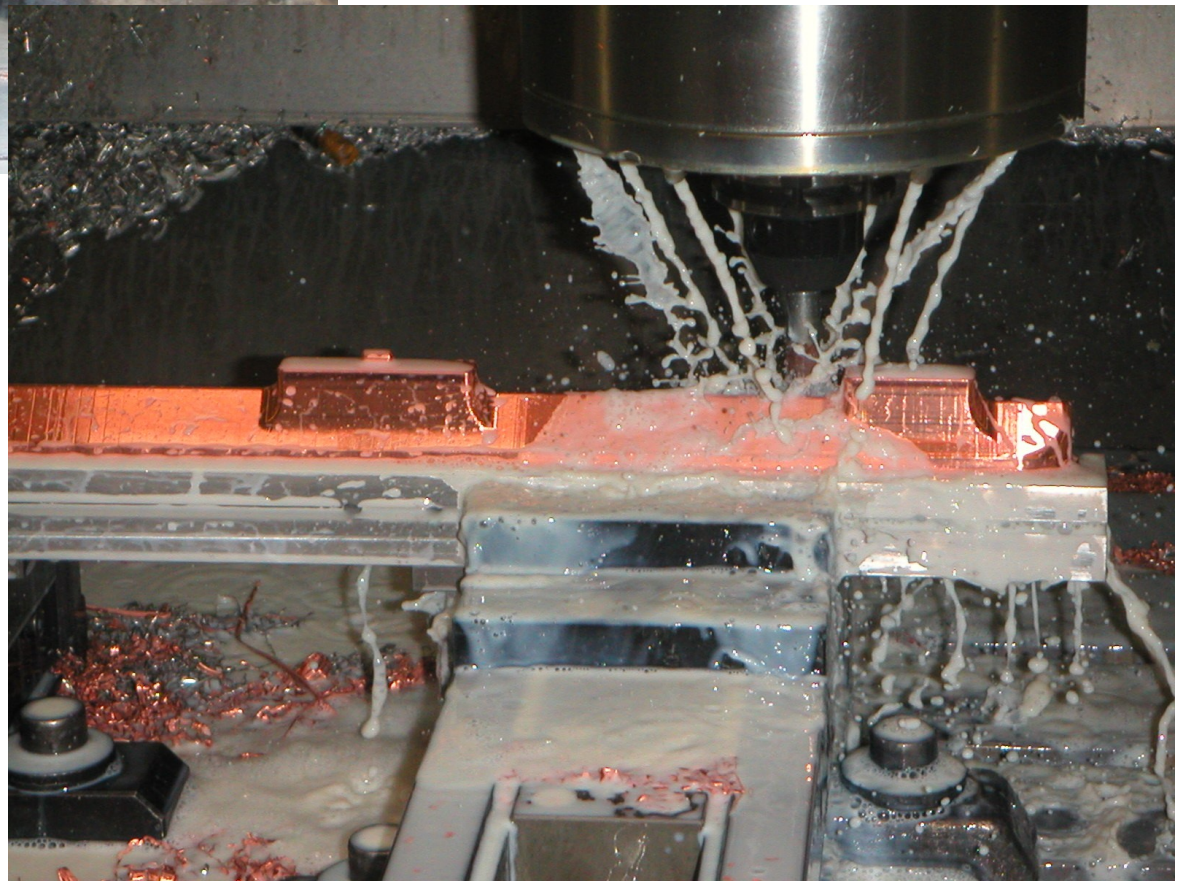

MEBT Status

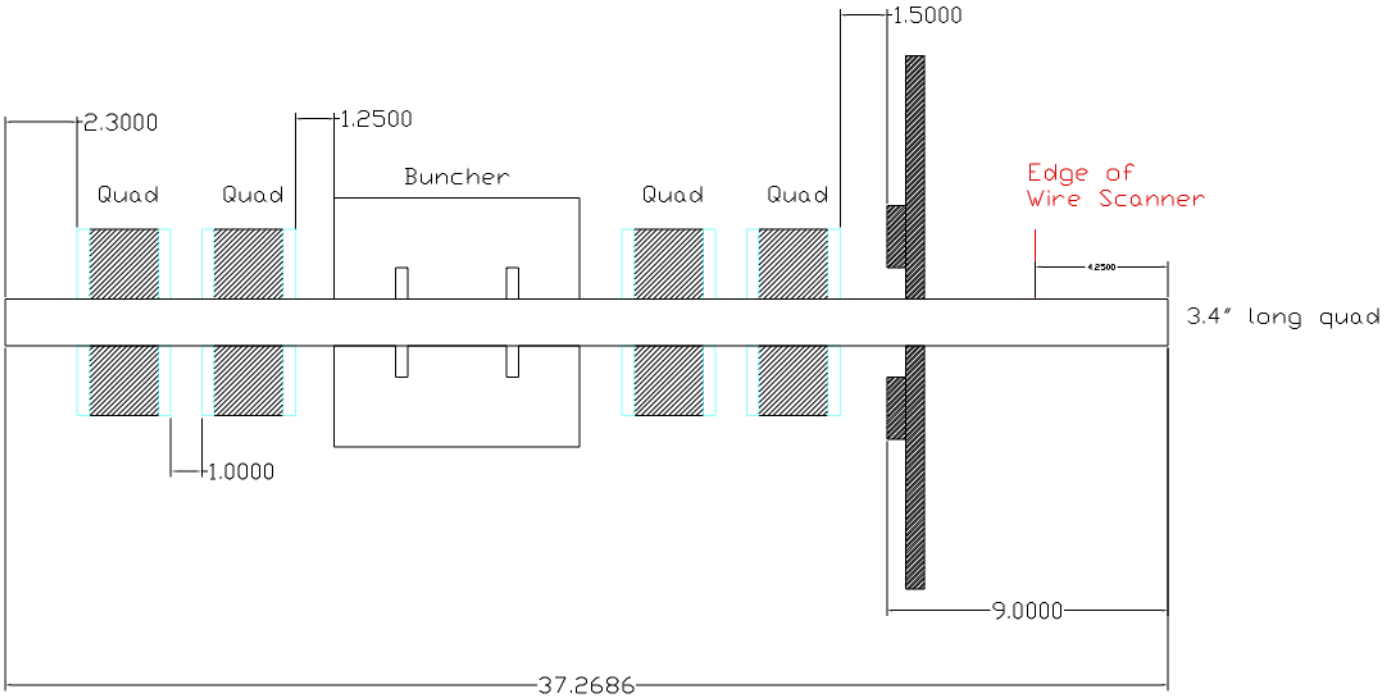

Device	Status	Comments
Quads	3D drawings complete.	Quad reqs have been approved (25 Apr). Quad stands ordered (due 13 June). Quad order+coil (due 16 May). Quad core assembly waiting AD signatures. Coil winding fixtures placed last week.
Buncher	Bead pull station preliminary design done.	Will have all parts by Mid May.
Power for quads	Specs to follow	Quads being redone.
Power for buncher		Use present buncher supply in the line.

Bead Pull Station

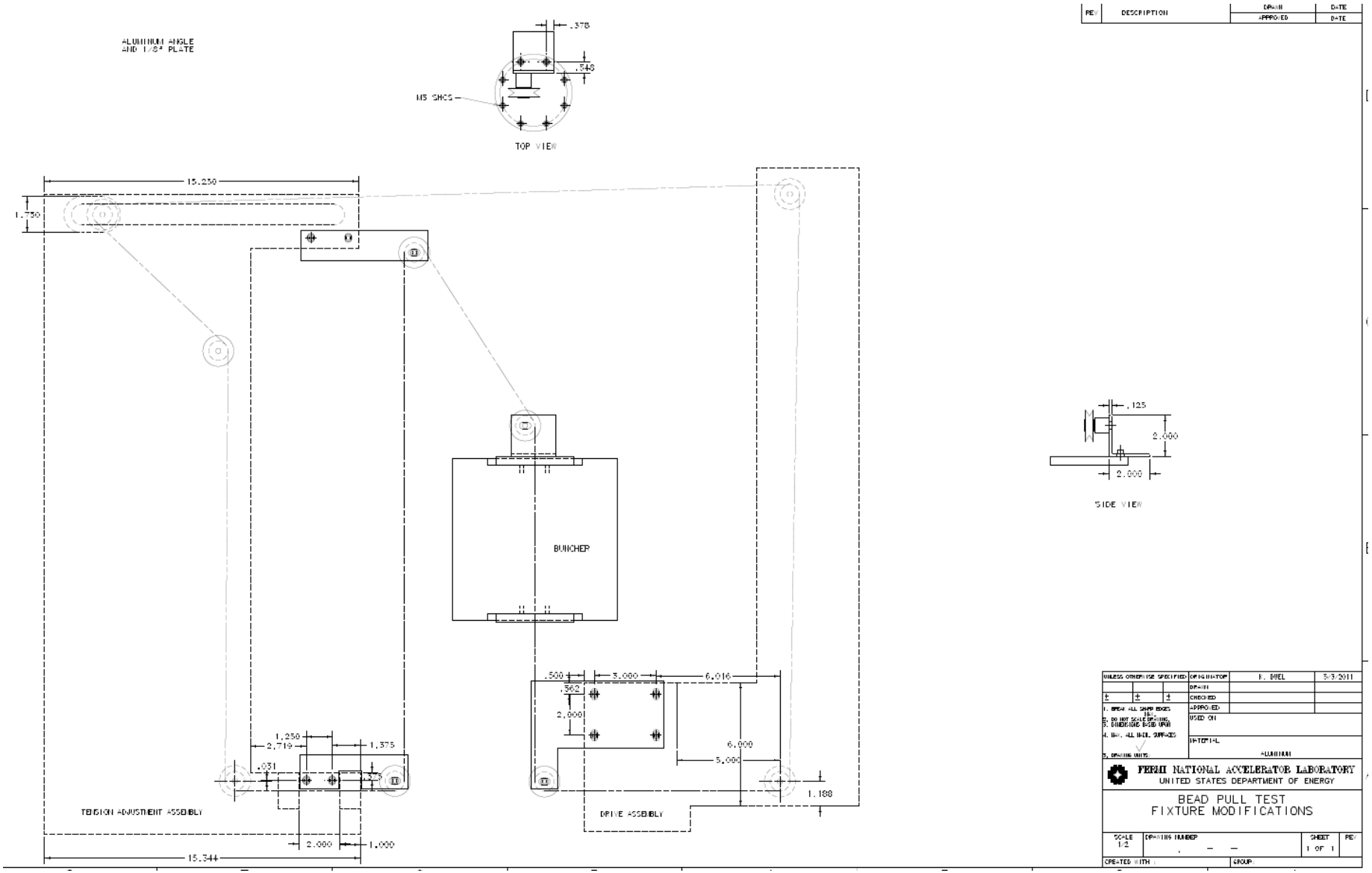

Controls

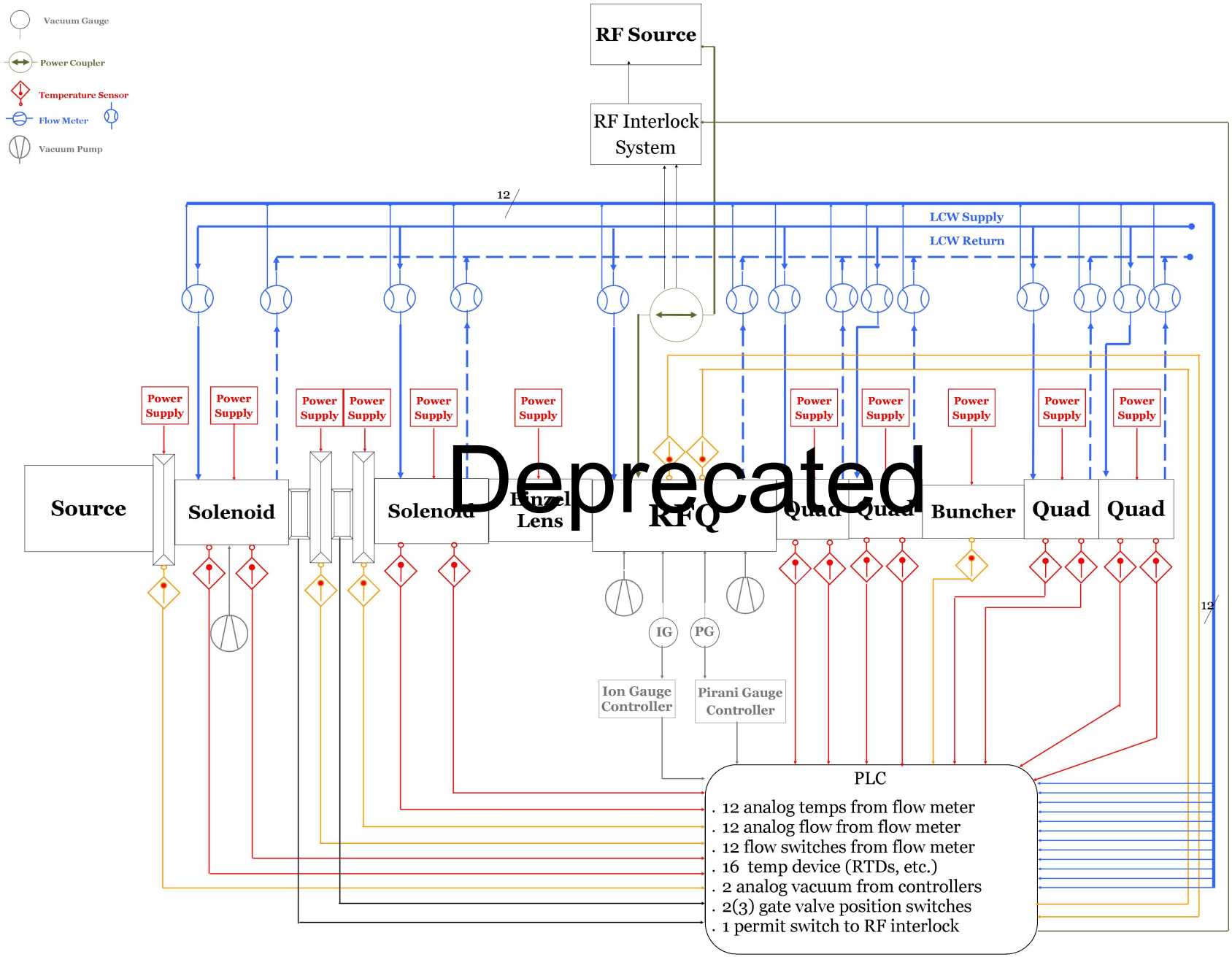

Deprecated

Test Area

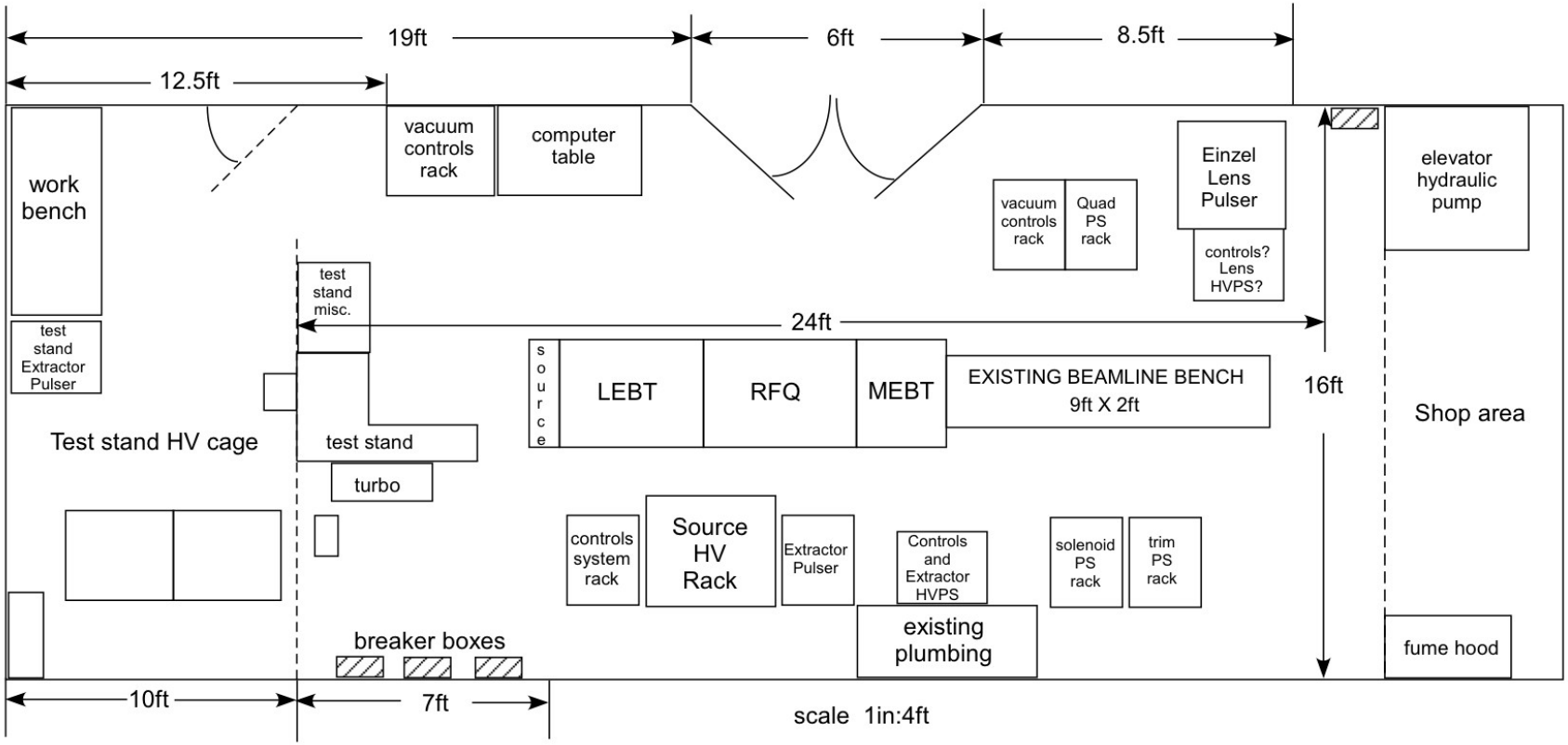
19ft
6ft
8.5ft
12.5ft
work bench
test stand Extractor Pulser
vacuum controls rack
computer table
vacuum controls rack
Quad PS rack
Einzel Lens Pulser
controls? Lens HVPS?
elevator hydraulic pump
test stand misc.
24ft
source
LEBT
RFQ
MEBT
EXISTING BEAMLINE BENCH 9ft X 2ft
16ft
Shop area
Test stand HV cage
test stand
turbo
controls system rack
Source HV Rack
Extractor Pulser
Controls and Extractor HVPS
solenoid PS rack
trim PS rack
existing plumbing
breaker boxes
fume hood
10ft
7ft
scale 1in:4ft

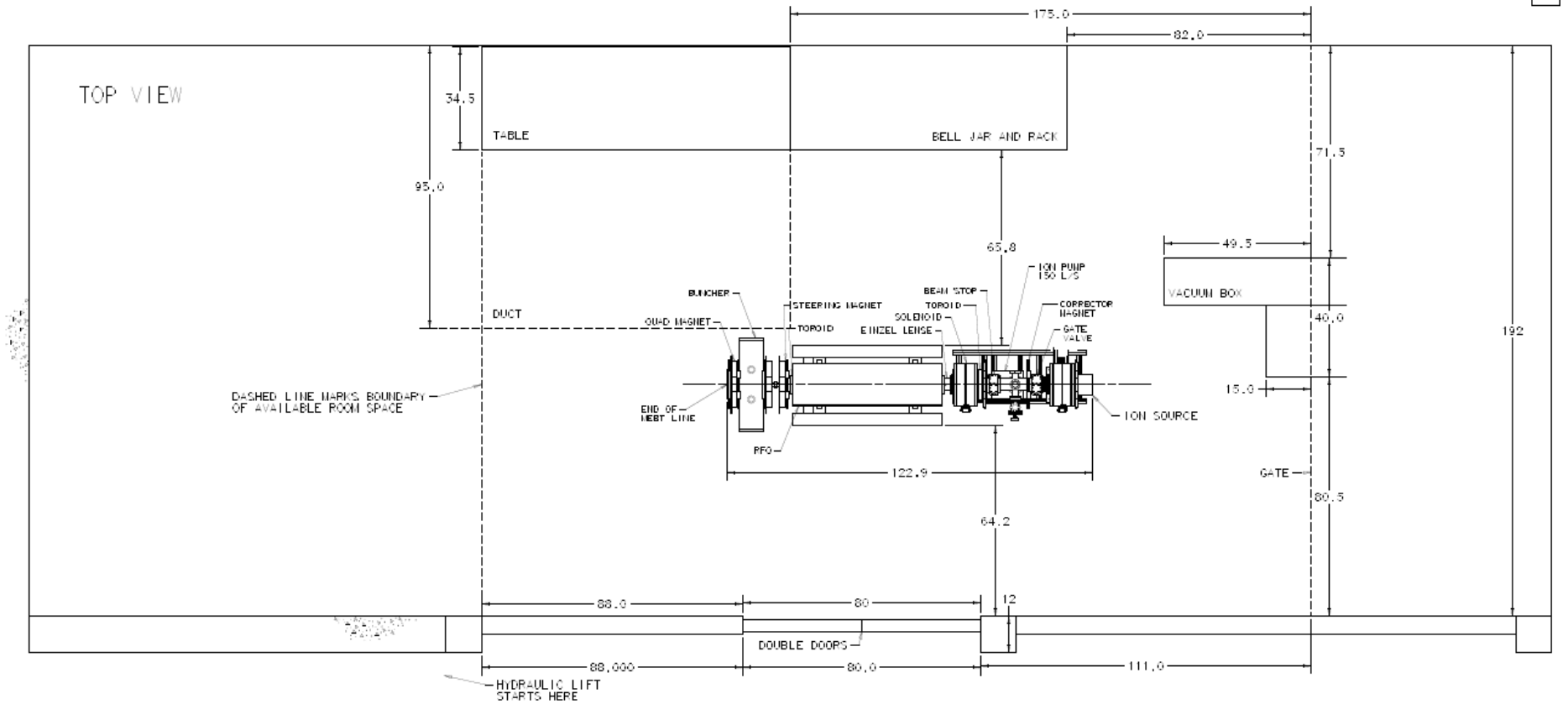
TOP VIEW
175.0
82.0
34.5
TABLE
BELL JAR AND RACK
71.5
95.0
65.8
49.5
ION PUMP
150 L/S
VACUUM BOX
BUNCHER
STEERING MAGNET
BEAM STOP
TOROID
CORRECTOR
MAGNET
DUCT
QUAD MAGNET
TOROID
SOLENOID
EINZEL LENSE
GATE
VALVE
40.0
192
DASHED LINE MARKS BOUNDARY
OF AVAILABLE ROOM SPACE
END OF
MEBT LINE
15.0
ION SOURCE
PFO
122.9
GATE
80.5
64.2
88.0
80
12
DOUBLE DOORS
88.000
80.0
111.0
HYDRAULIC LIFT
STARTS HERE

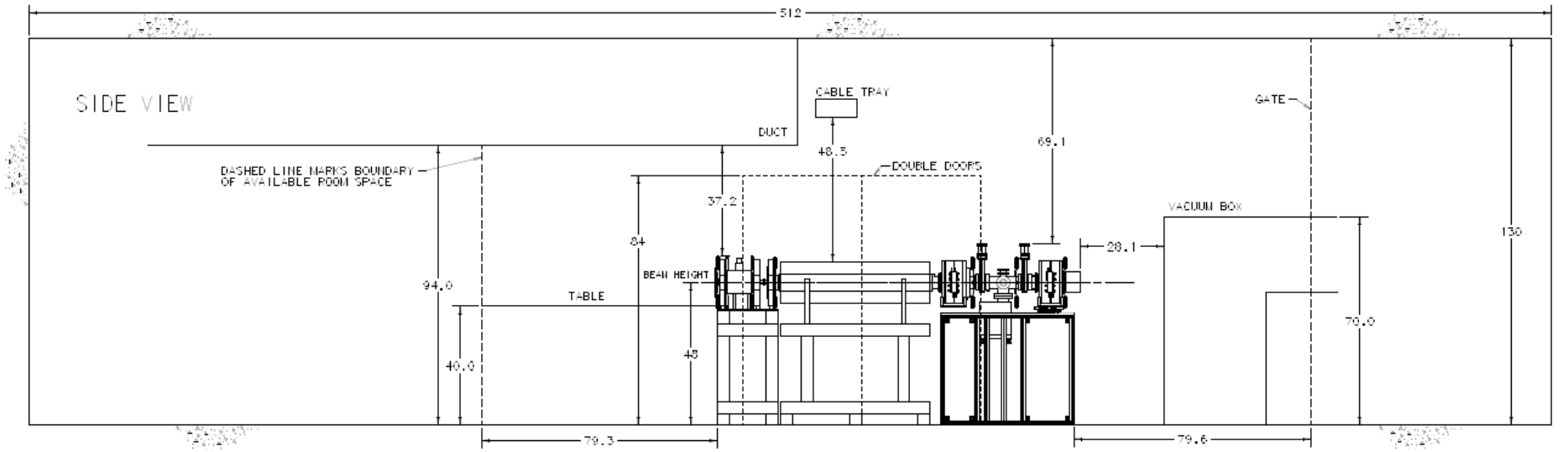
512
SIDE VIEW
CABLE TRAY
GATE
DUCT
48.5
69.1
DASHED LINE MARKS BOUNDARY
OF AVAILABLE ROOM SPACE
DOUBLE DOORS
37.2
VACUUM BOX
84
28.1
130
BEAM HEIGHT
94.0
TABLE
70.0
48
40.0
79.3
79.6

Safety

- When can the beam line layout in test area be done?

RFQ reminders

- <u>Schempp is vendor</u>
  - Make sure that the vanes are cleaned! See ISIS email.
    - Some cleaning details supplied by ISIS.
  - Review and verify on site mechanical design and construction (already in contract).