New injector cryostat-module based on 3 GHz SRF cavities for the S-DALINAC

TECHNISCHE UNIVERSITÄT DARMSTADT

Thorsten Kürzeder

TU Darmstadt
Institut für Kernphysik

New injector cryostat-module based on 3 GHz SRF cavities for the S-DALINAC

TECHNISCHE UNIVERSITÄT DARMSTADT

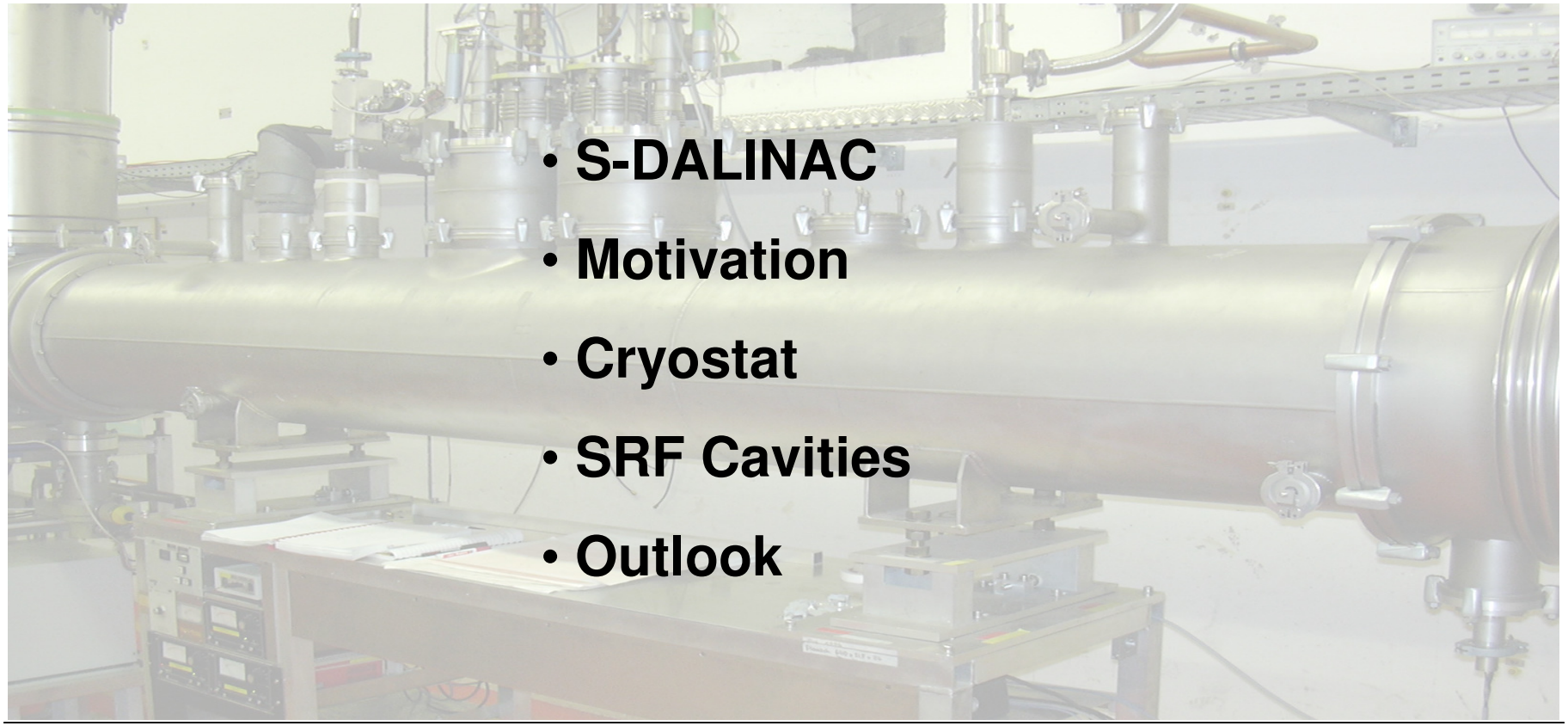

- S-DALINAC
- Motivation
- Cryostat
- SRF Cavities
- Outlook

Darmstadt

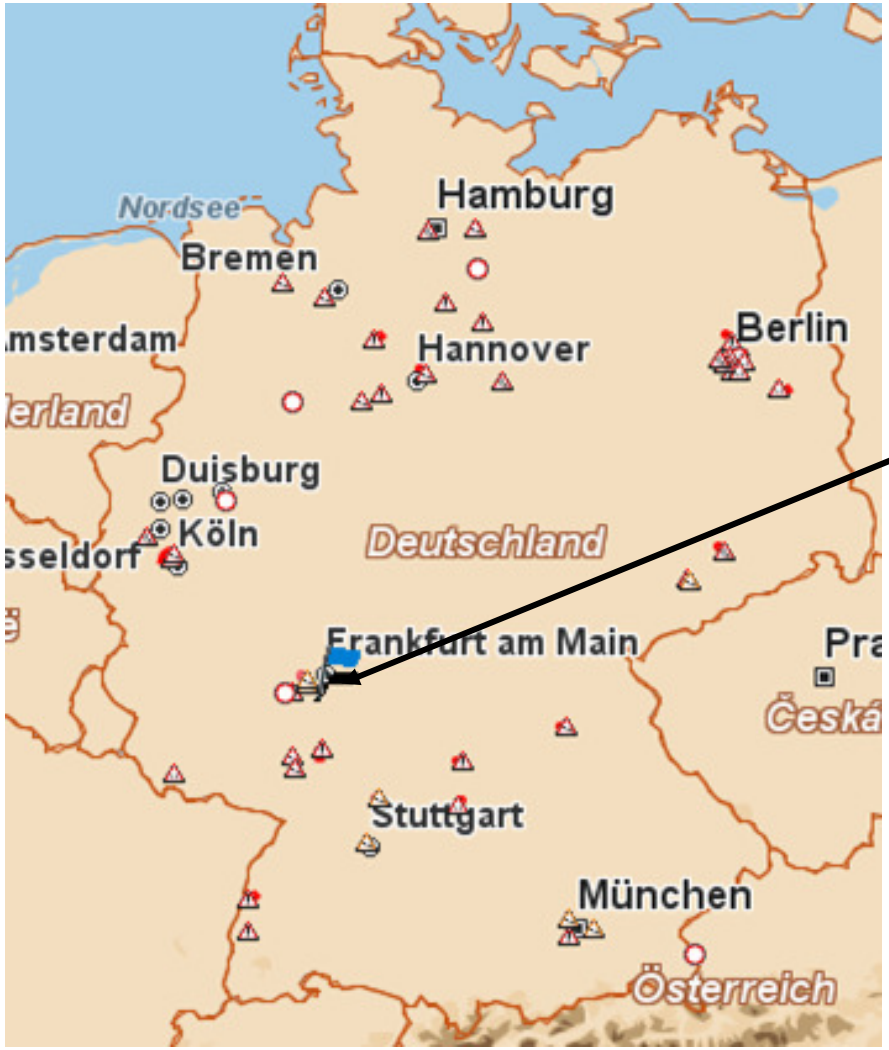

Technische Universität
& S-DALINAC

GSI & FAIR

S-DALINAC

TECHNISCHE UNIVERSITÄT DARMSTADT

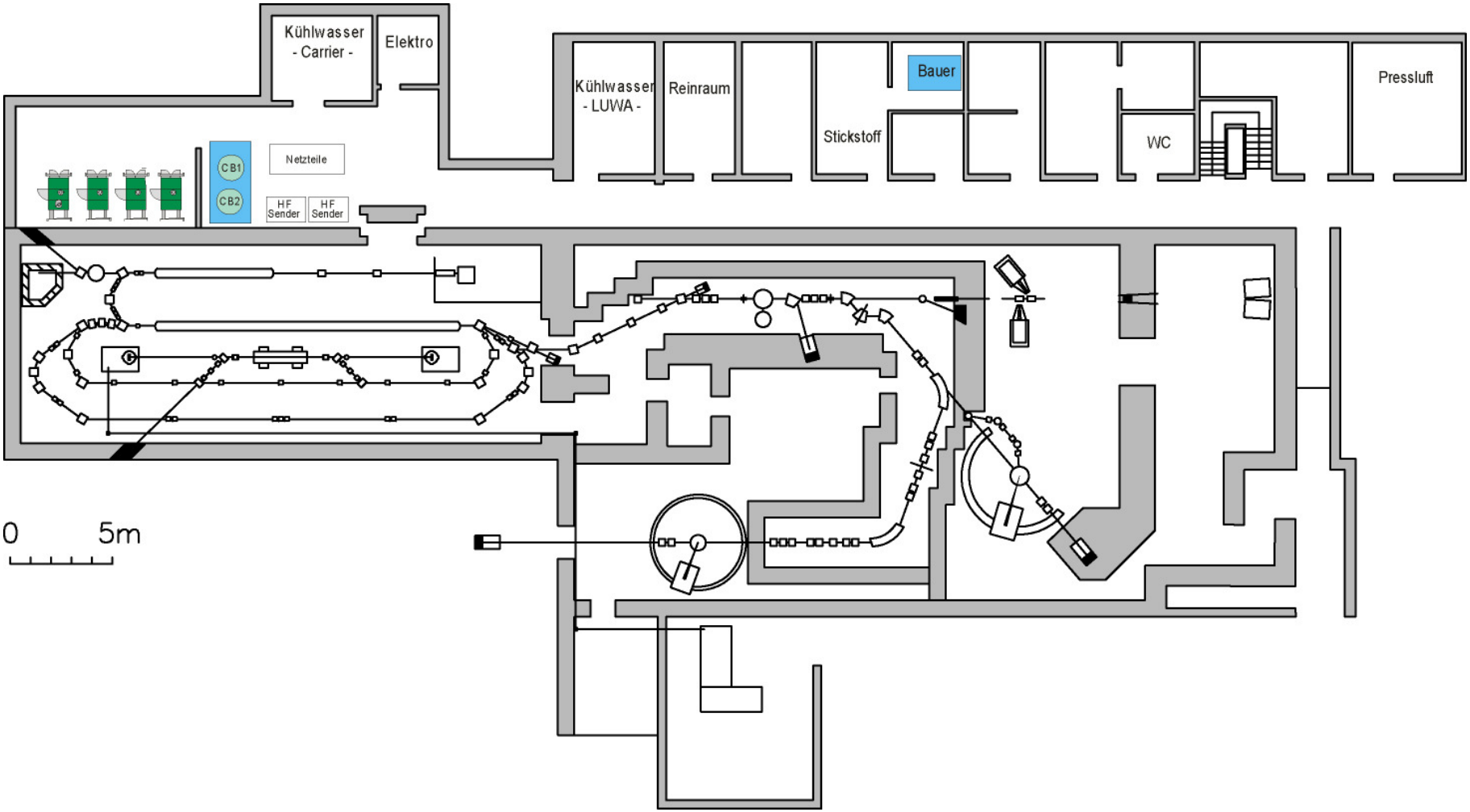

S-DALINAC

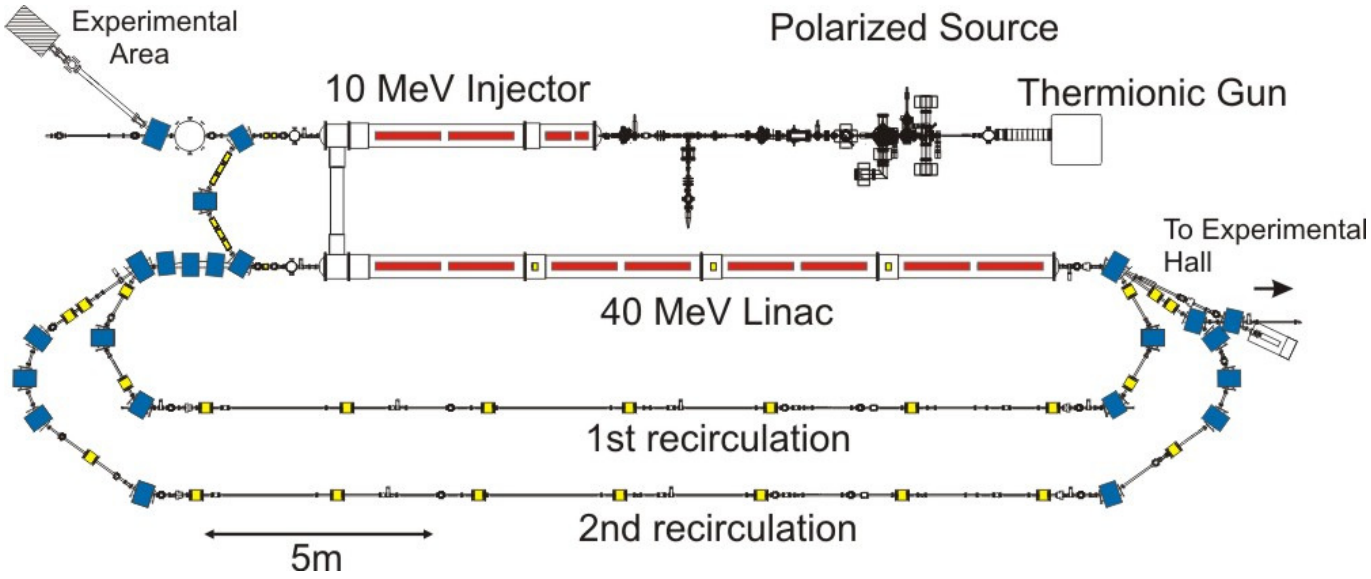

Freq.: 3 GHz
Duty cycle: cw
Temp.: 2 Kelvin
Max. E.: 130 MeV
Max. curr.: 20-60 µA

Since 1991

S-DALINAC

TECHNISCHE UNIVERSITÄT DARMSTADT

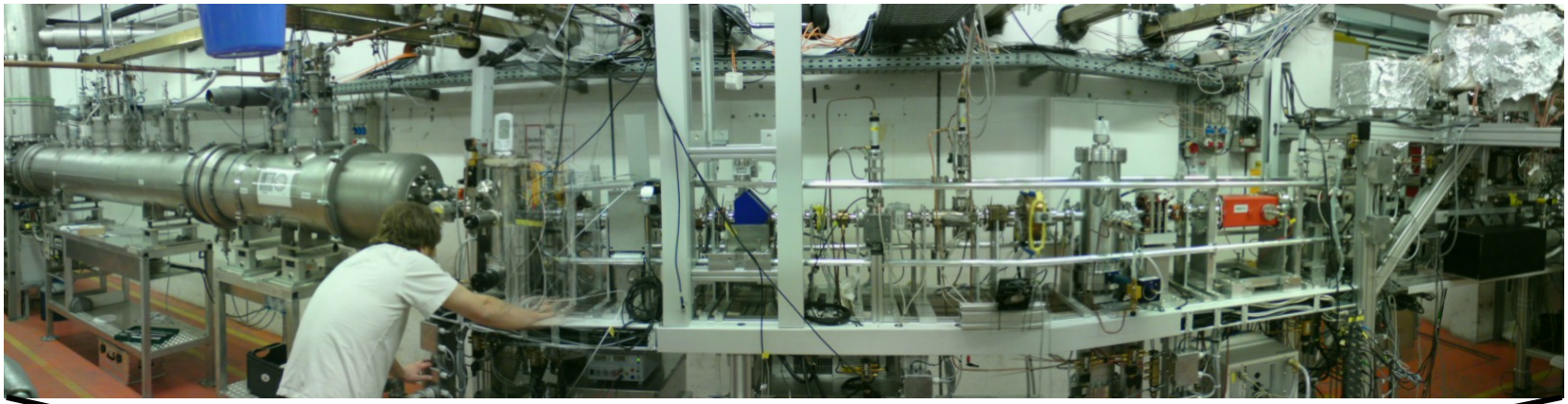

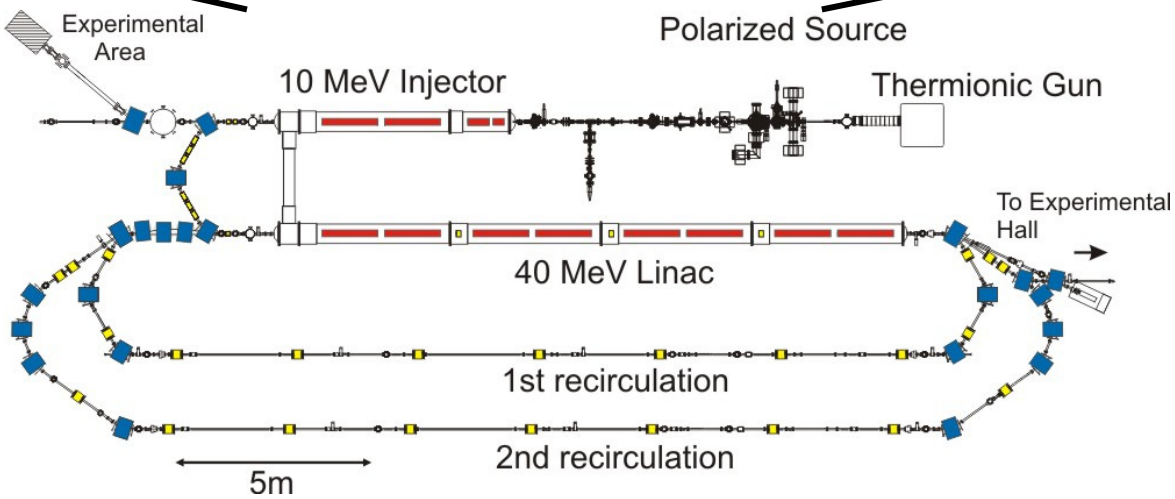

Accelerator hall

TECHNISCHE UNIVERSITÄT DARMSTADT

Motivation

- Energy increase in the injector section from 10 up to 14 MeV
- Increase in current from 60 µA to 150 – 250 µA

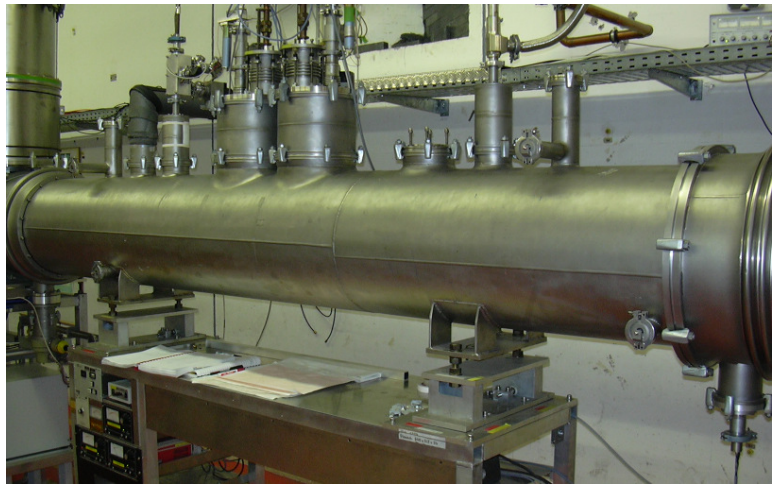

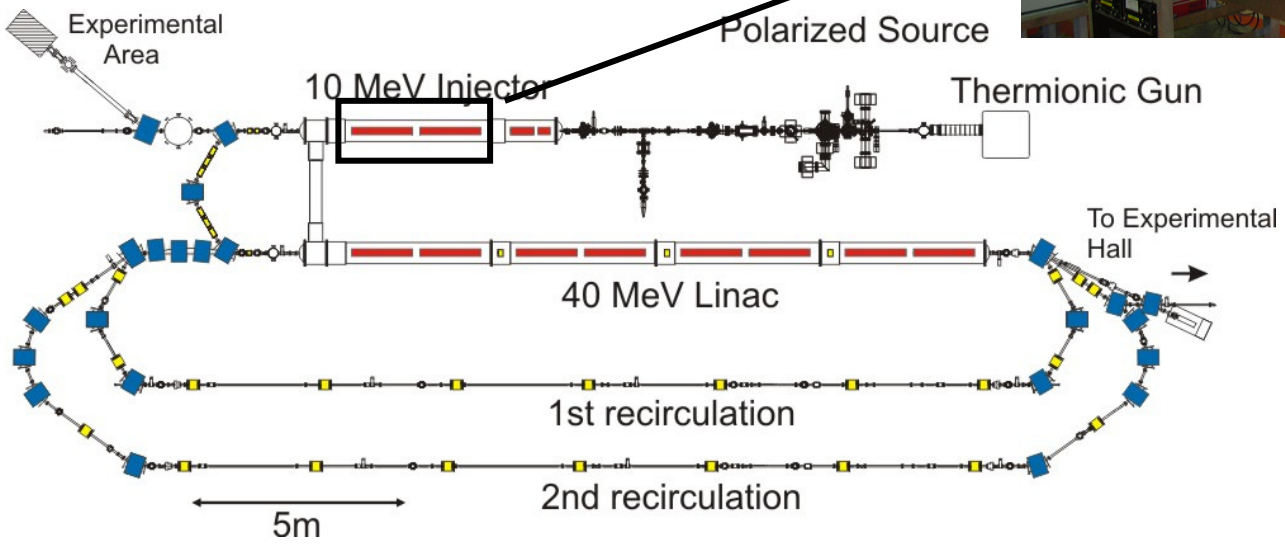

S-DALINAC

Freq.:	3 GHz
Duty cycle:	cw
Temp.:	2 Kelvin
Max. E.:	130 MeV
Max. curr.:	20-60 µA

Since 1991

RF power couplers

Actual power coupler: **500 W**

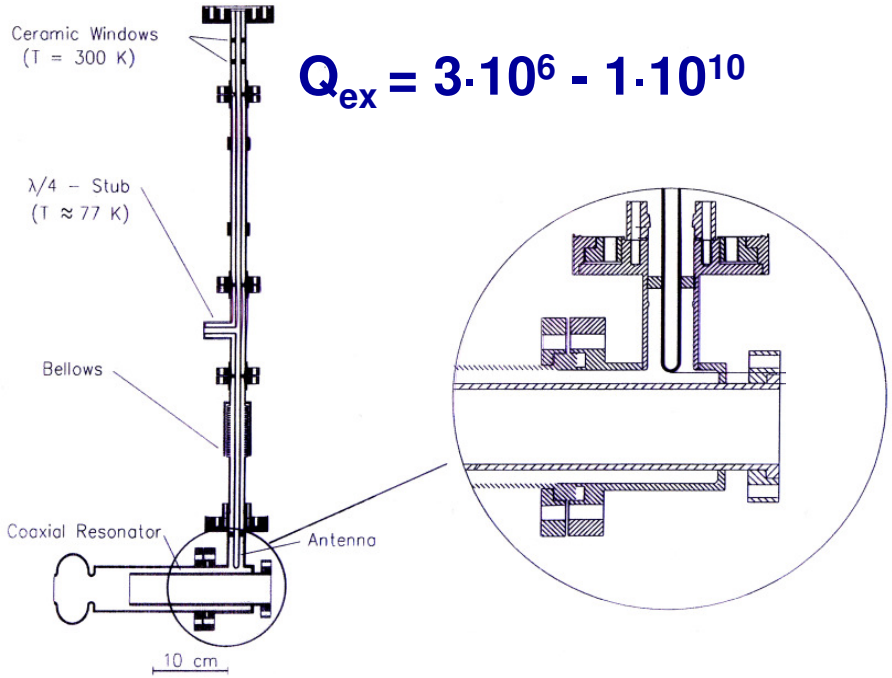

$Q_{ex} = 3 \cdot 10^6 - 1 \cdot 10^{10}$

RF power couplers

TECHNISCHE UNIVERSITÄT DARMSTADT

Actual power coupler: **500 W** $Q_{ex} = 3 \cdot 10^6 - 1 \cdot 10^{10}$

Waveguide coupler: **2 kW** $Q_{ex} = 5 \cdot 10^6$

transverse electro-magnetic fields inside the beam tube, now to less than -40 dB

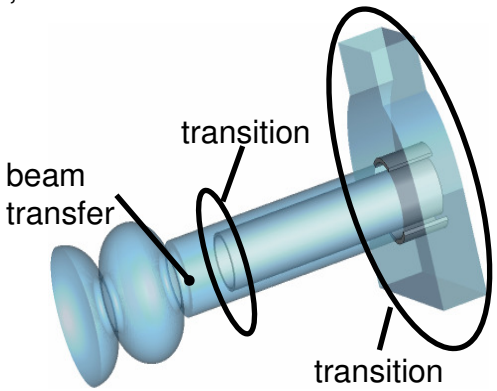

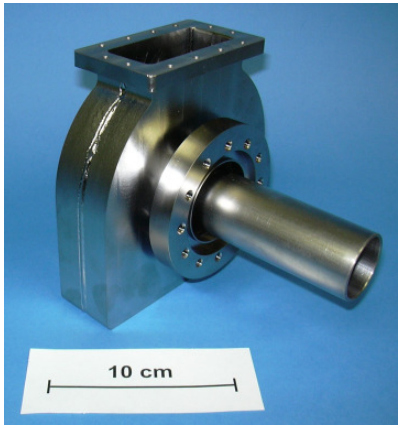

Design: TEMF

M. Kunze, W. F. O. Müller

Fabrication: FZ Julich

Current cryomodule

TECHNISCHE UNIVERSITÄT DARMSTADT

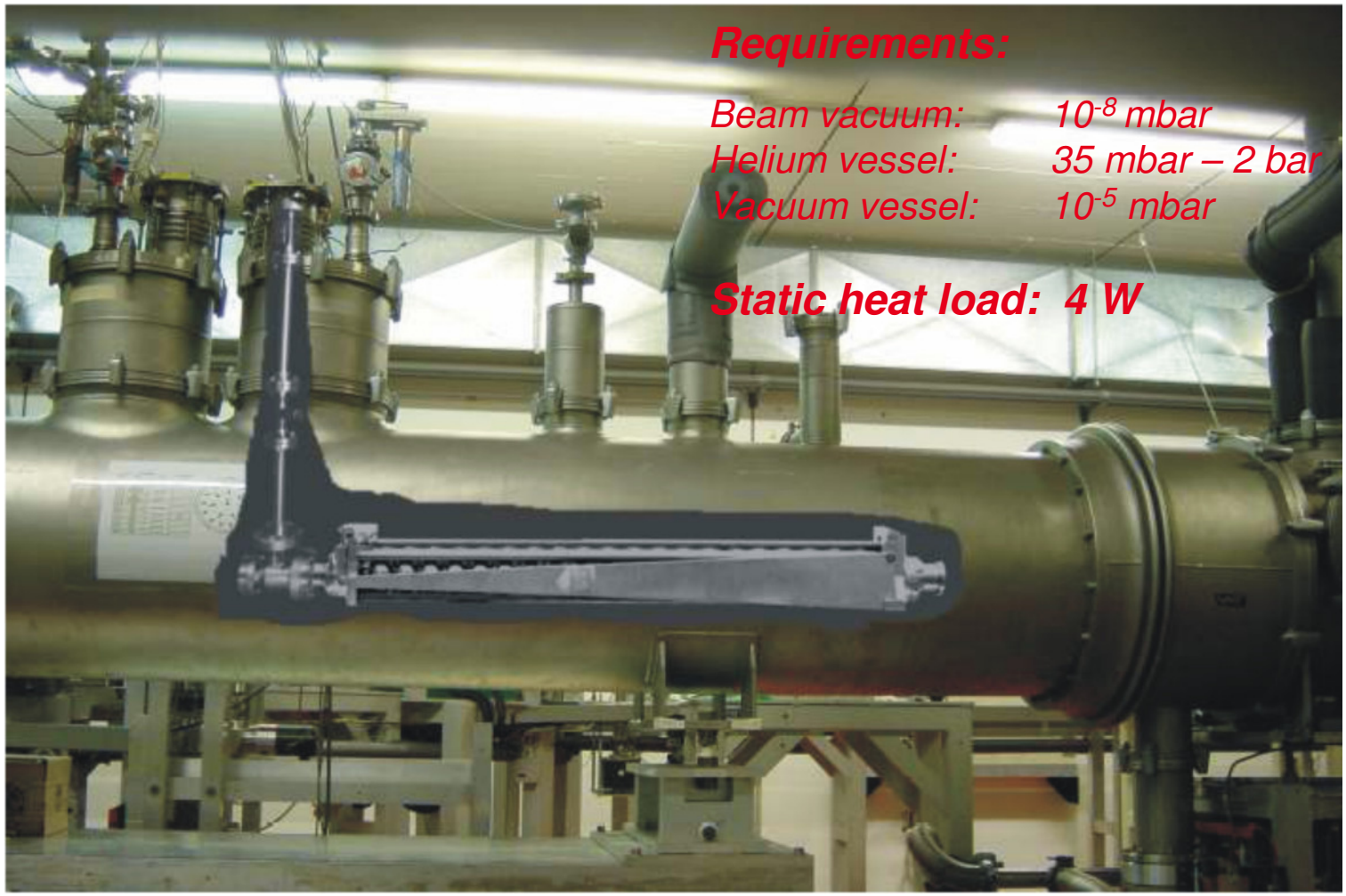

New injector

	Current design	New design
Energy	10 MeV	14 MeV
Current	60 µA	150-250 µA
RF coupler	coax-to-coax	waveguide-to-coax
RF trans. line	coaxial (21 mm)	waveguide (WR-284)
Max. power	500 W	2000 W

New injector

	Current design	New design
Energy	10 MeV	14 MeV
Current	60 µA	150-250 µA
RF coupler	coax-to-coax	waveguide-to-coax
RF trans. line	coaxial (21 mm)	waveguide (WR-284)
Max. power	500 W	2000 W

New injector

	Current design	New design	
Energy	10 MeV	14 MeV	New cavities
Current	60 µA	150-250 µA	
RF coupler	coax-to-coax	waveguide-to-coax	
RF trans. line	coaxial (21 mm)	waveguide (WR-284)	Cryo-module
Max. power	500 W	2000 W	

Cryostat design

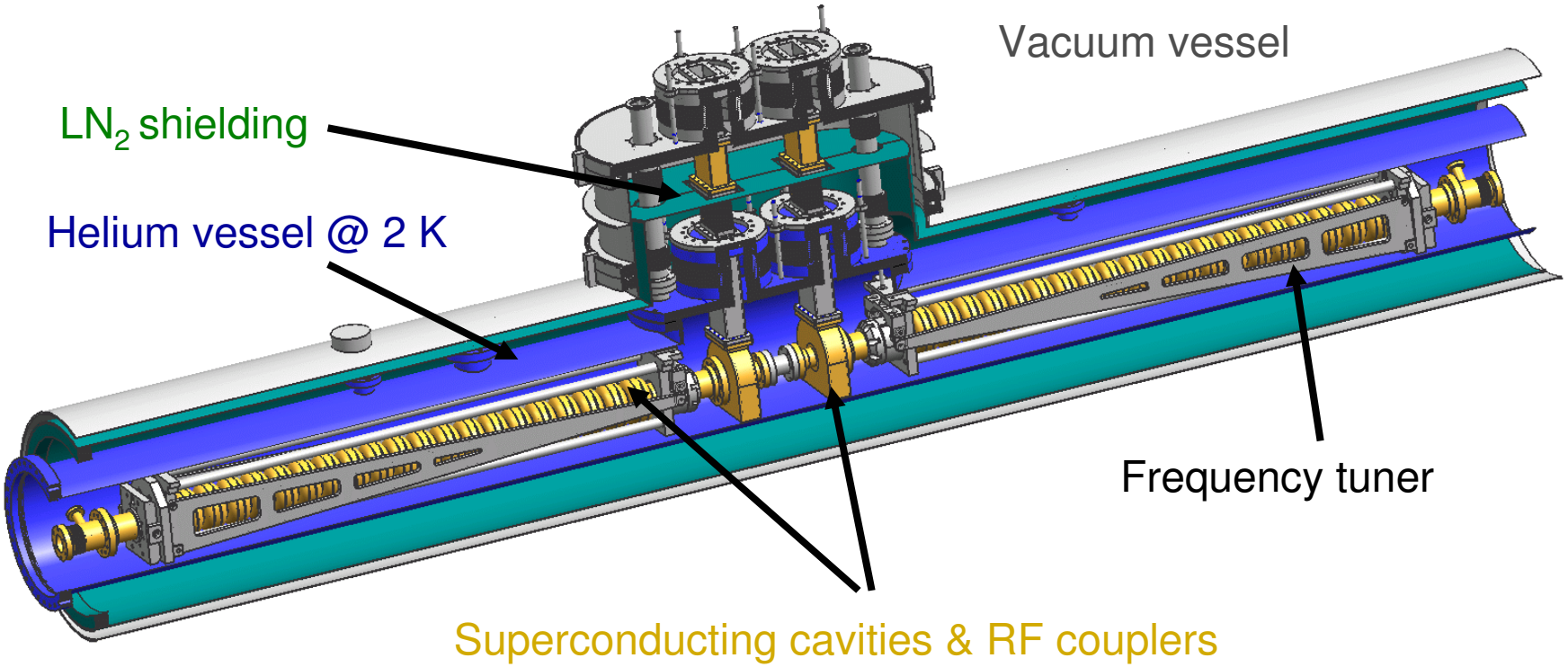

Cryostat design

TECHNISCHE UNIVERSITÄT DARMSTADT

20 cell cavities

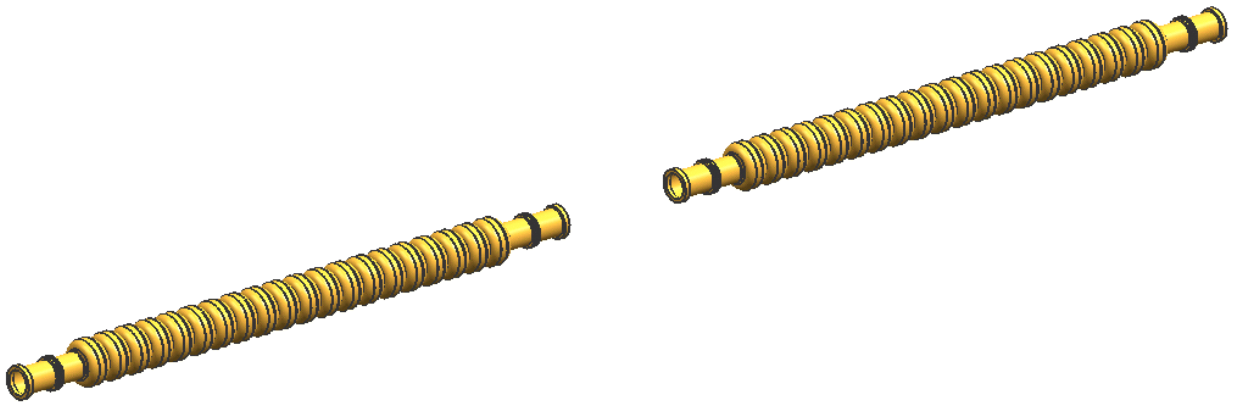

Cryostat design

TECHNISCHE UNIVERSITÄT DARMSTADT

Frequency tuner

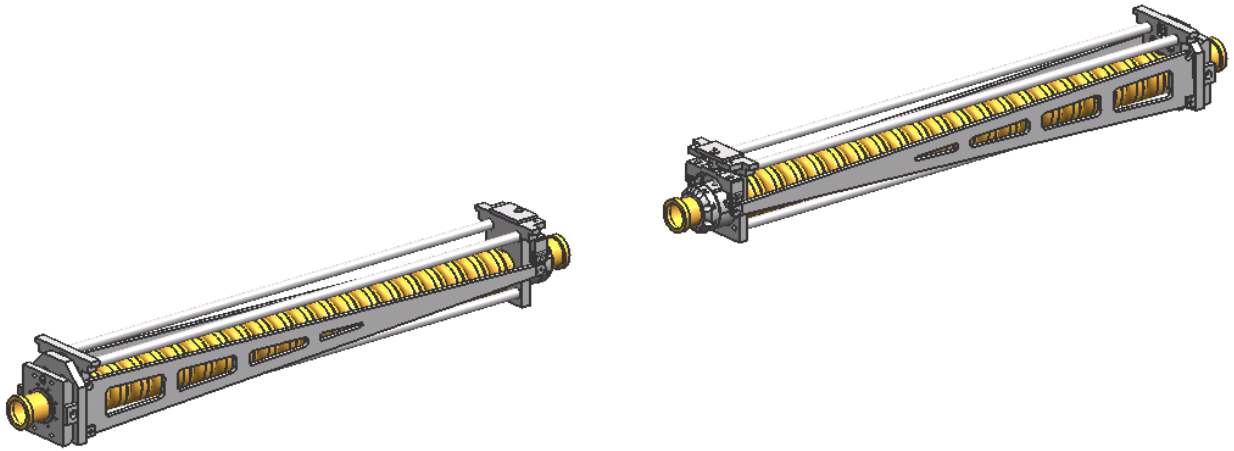

Cryostat design

TECHNISCHE UNIVERSITÄT DARMSTADT

Power couplers

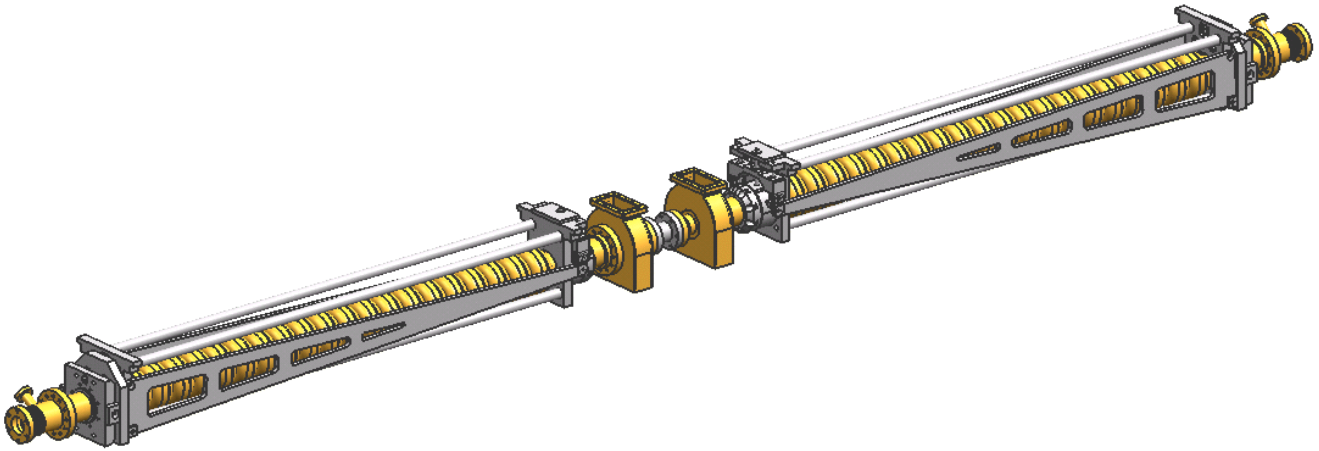

Cavity & tuner

TECHNISCHE UNIVERSITÄT DARMSTADT

Cryostat design

TECHNISCHE UNIVERSITÄT DARMSTADT

Helium vessel

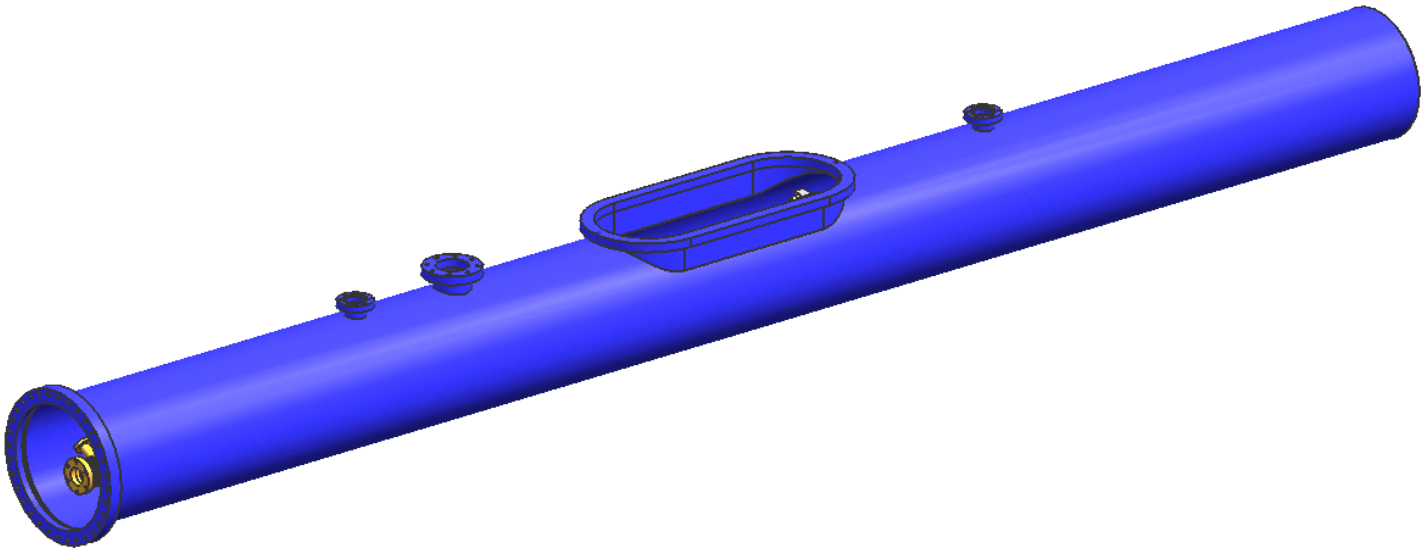

Cryostat design

TECHNISCHE UNIVERSITÄT DARMSTADT

LN_2 shielding

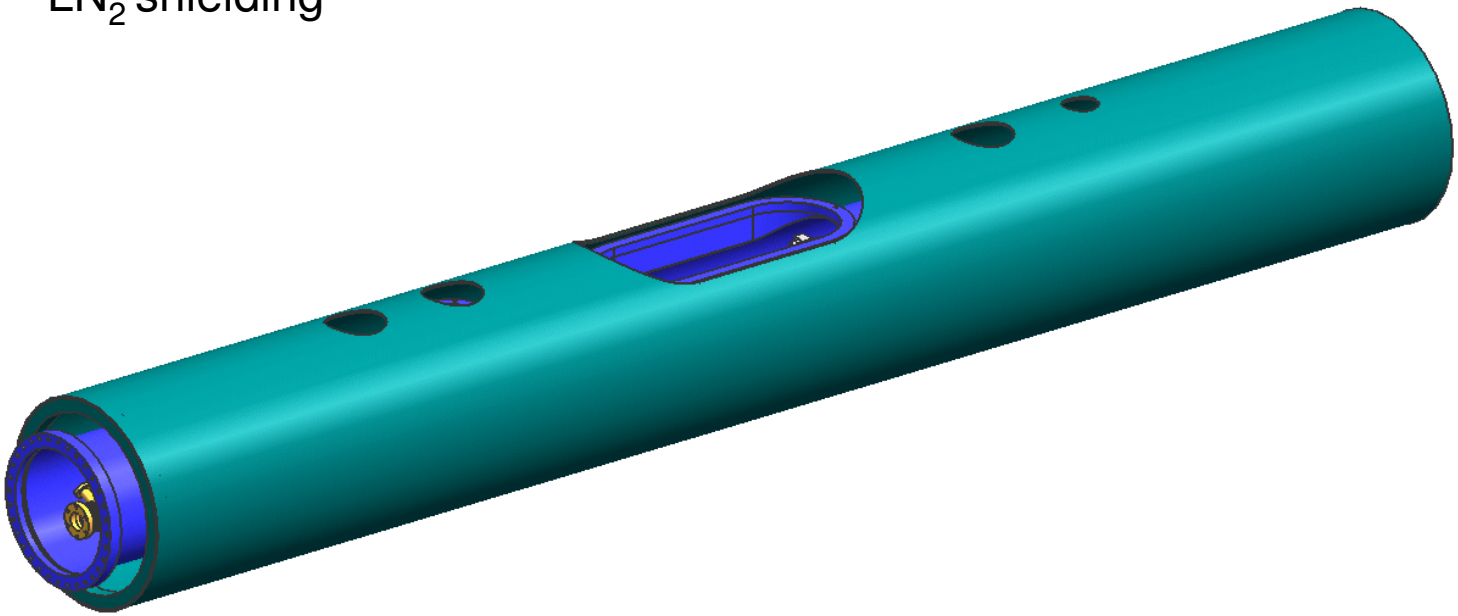

Cryostat design

TECHNISCHE UNIVERSITÄT DARMSTADT

Vacuum vessel

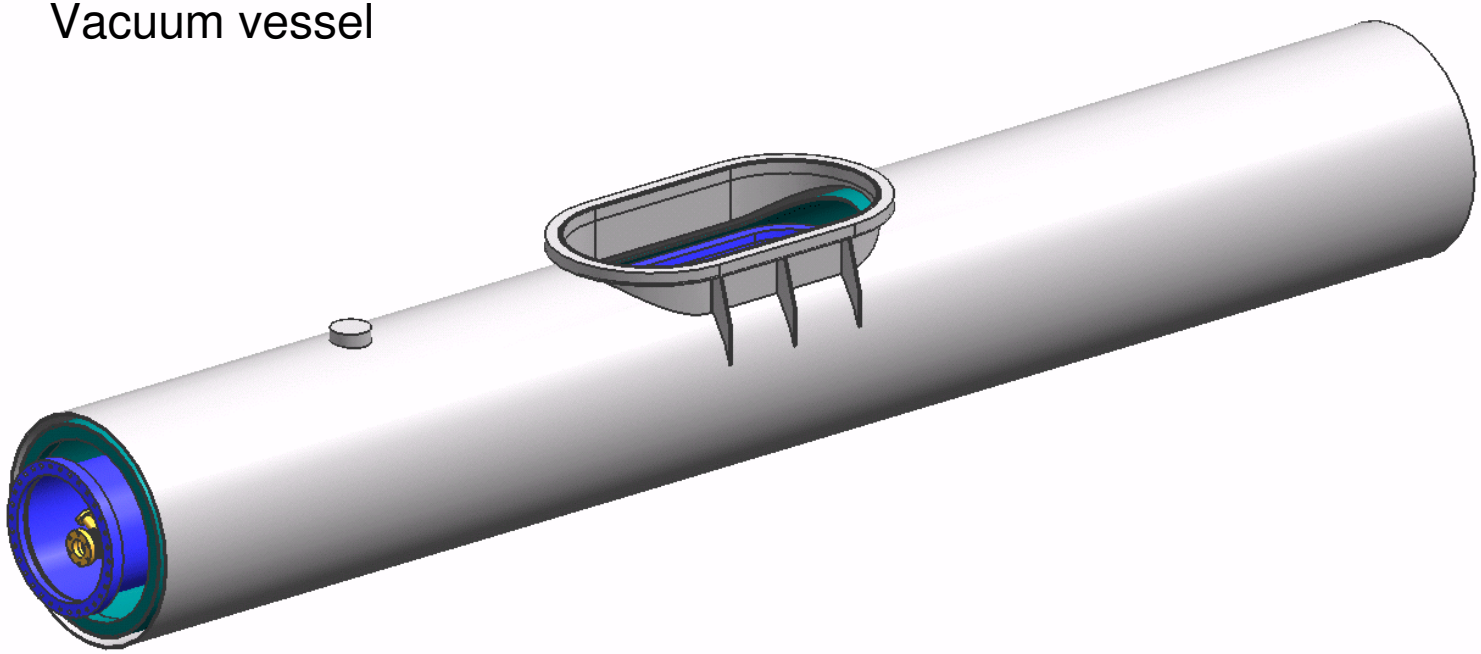

Cryostat design

TECHNISCHE UNIVERSITÄT DARMSTADT

Adding special waveguides

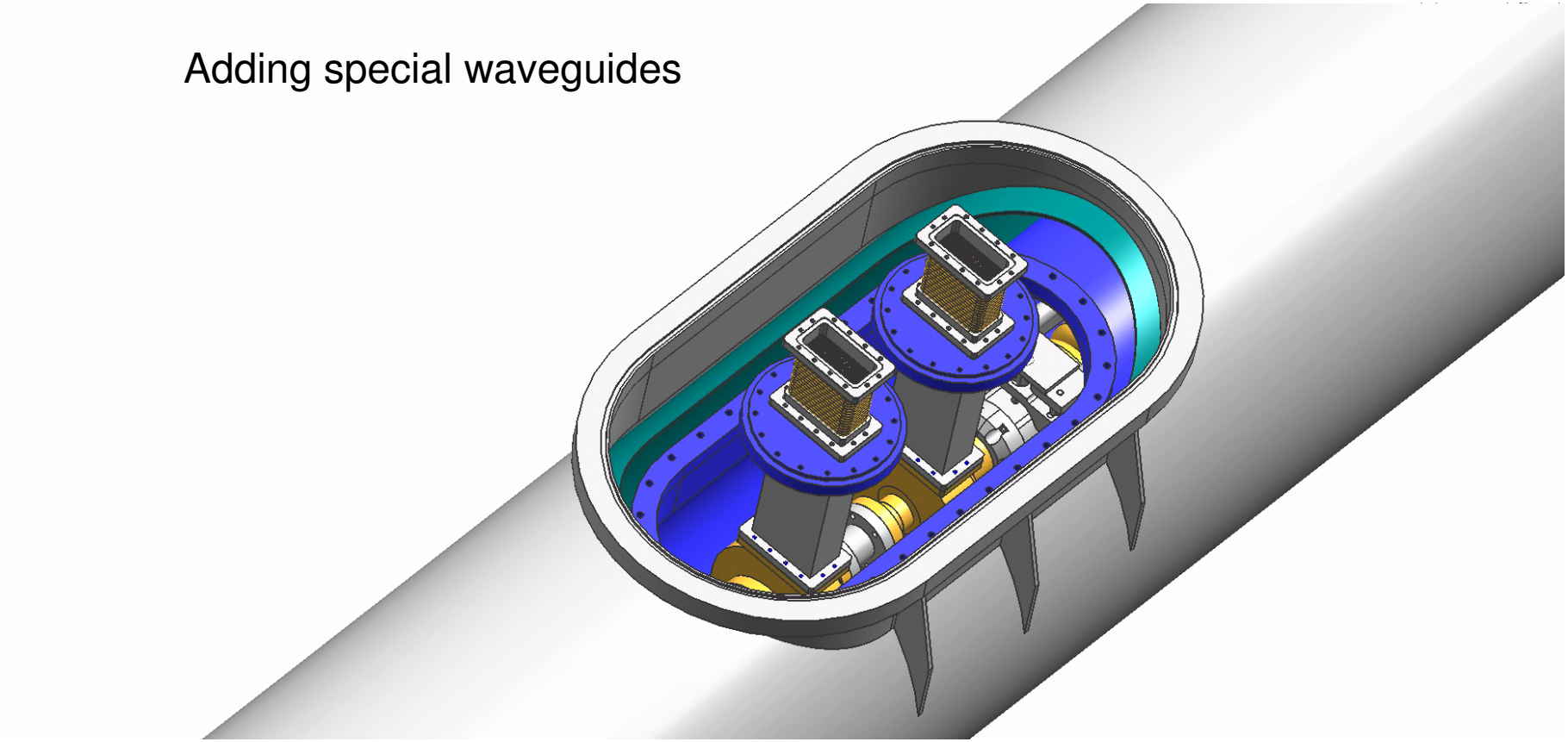

Cryostat design

TECHNISCHE UNIVERSITÄT DARMSTADT

Sealing the helium vessel

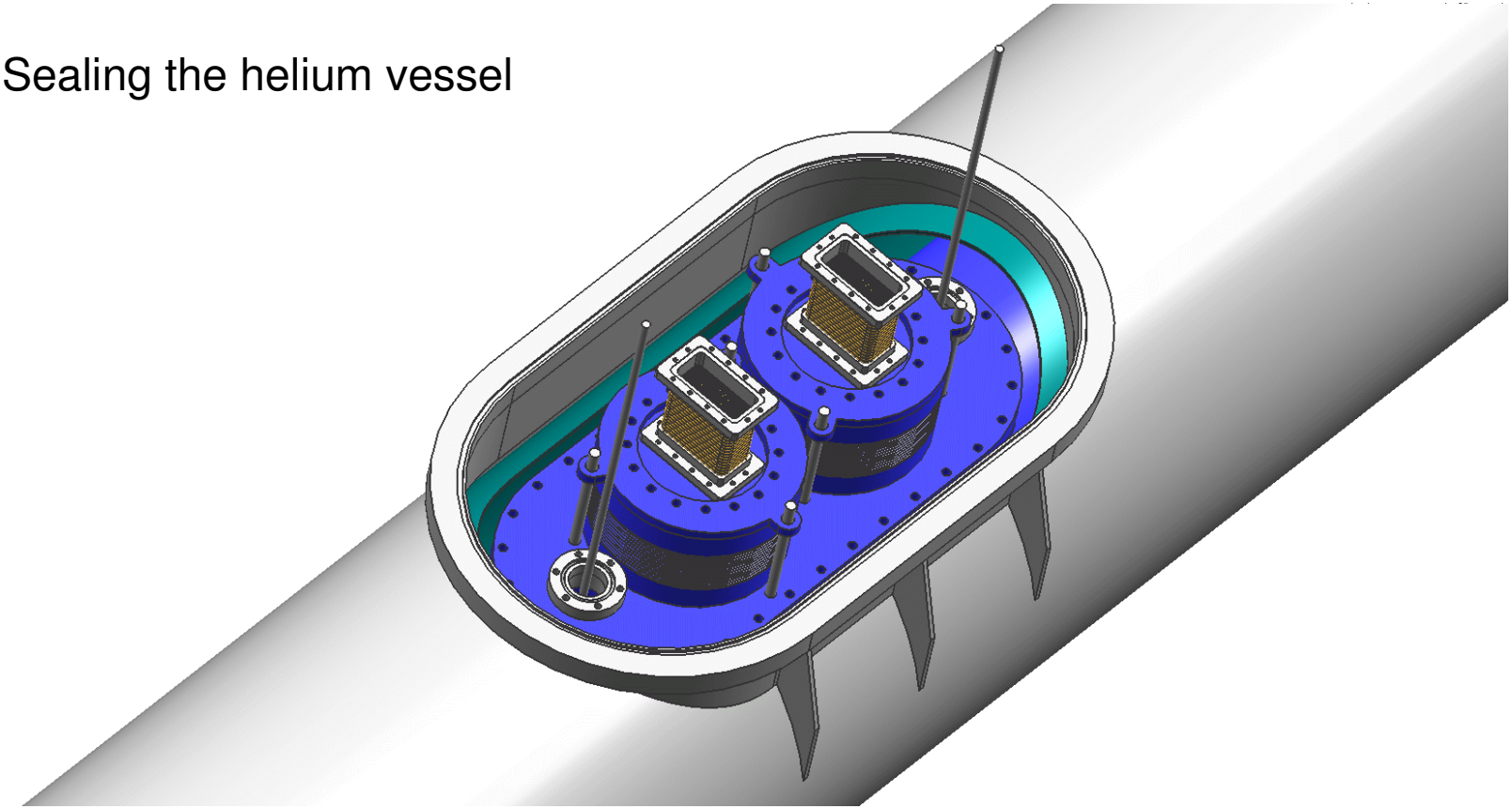

Cryostat design

TECHNISCHE UNIVERSITÄT DARMSTADT

Next waveguide parts

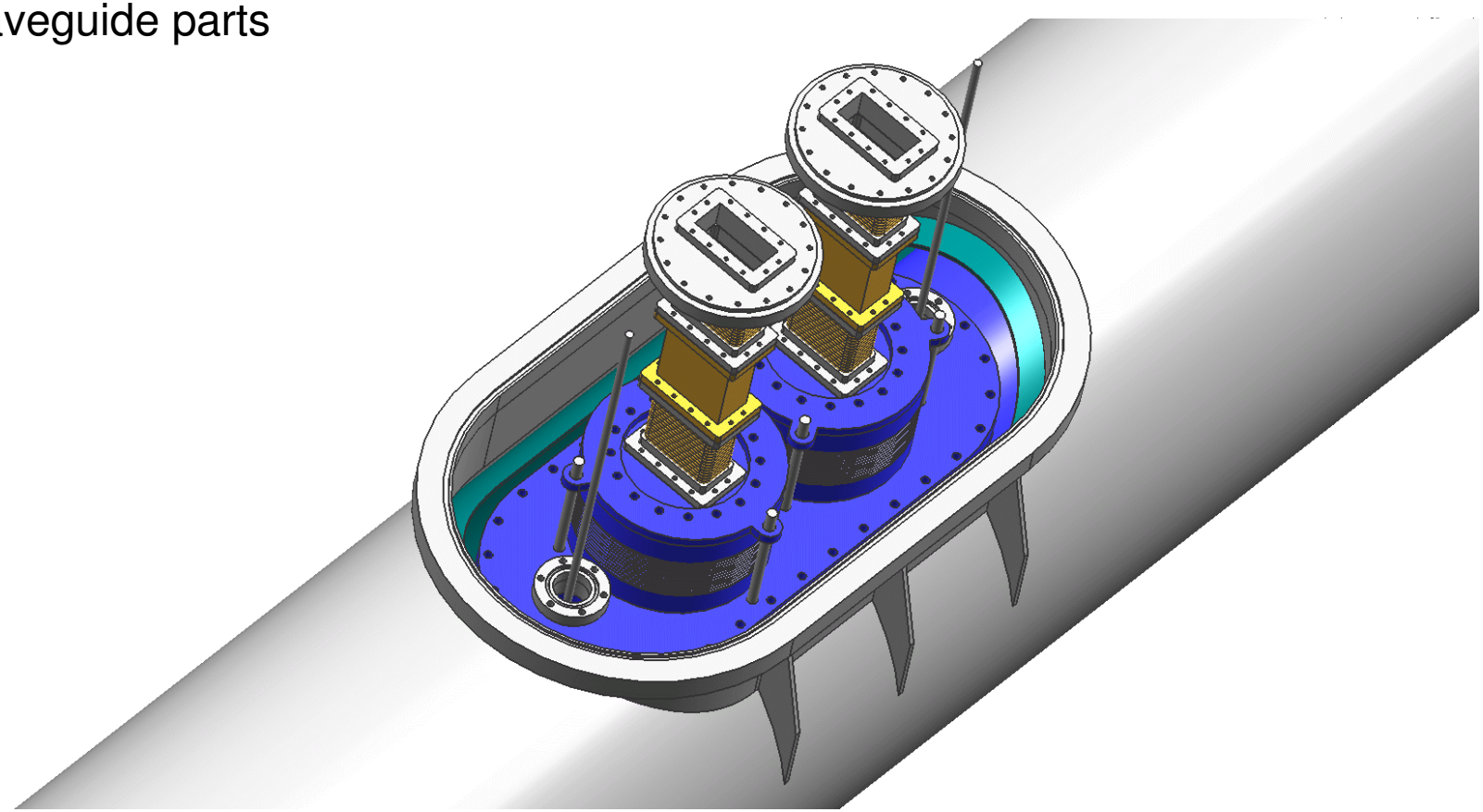

Cryostat design

TECHNISCHE UNIVERSITÄT DARMSTADT

Transition for motor rods

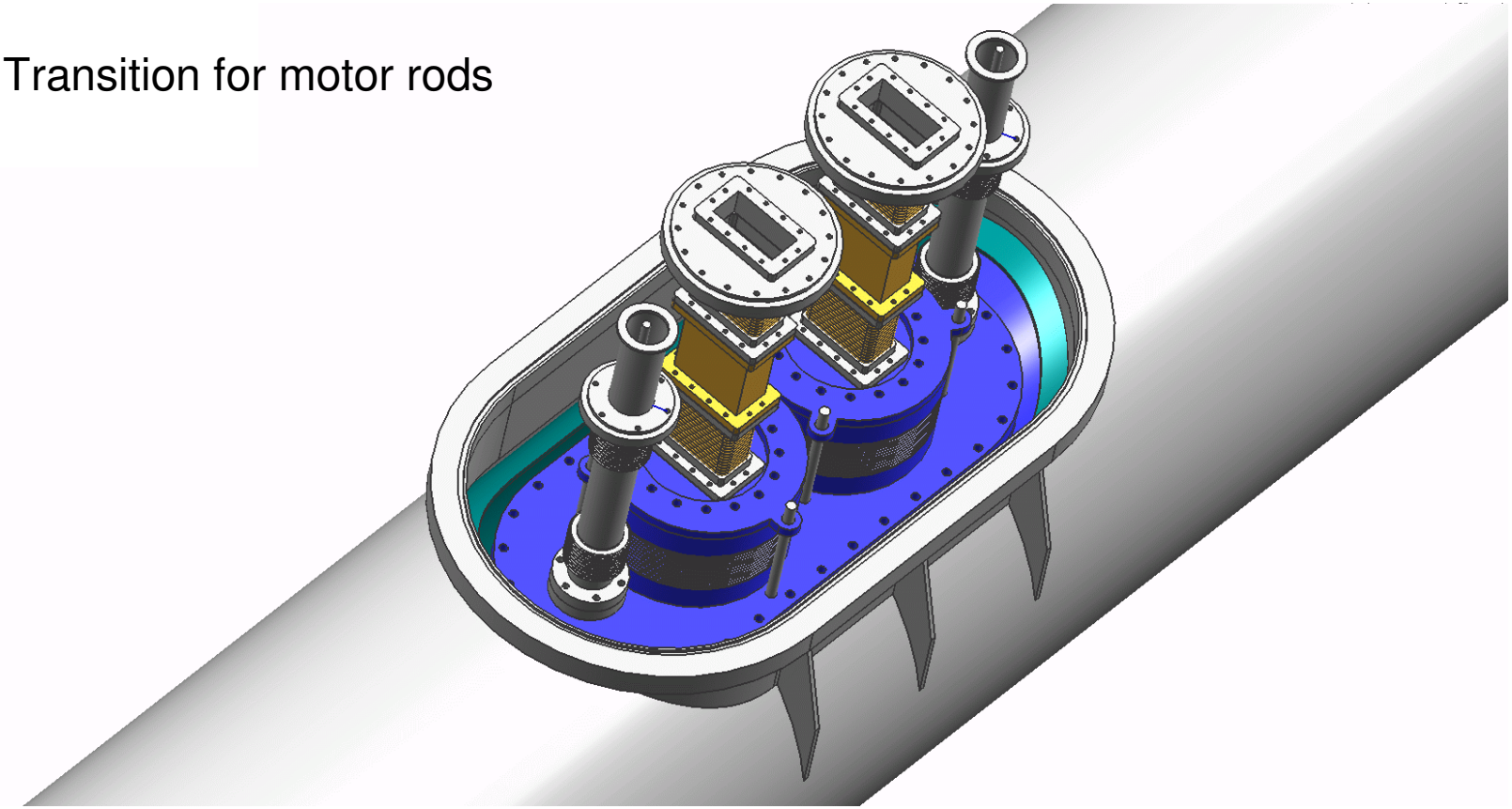

Cryostat design

TECHNISCHE UNIVERSITÄT DARMSTADT

LN_2 shielding

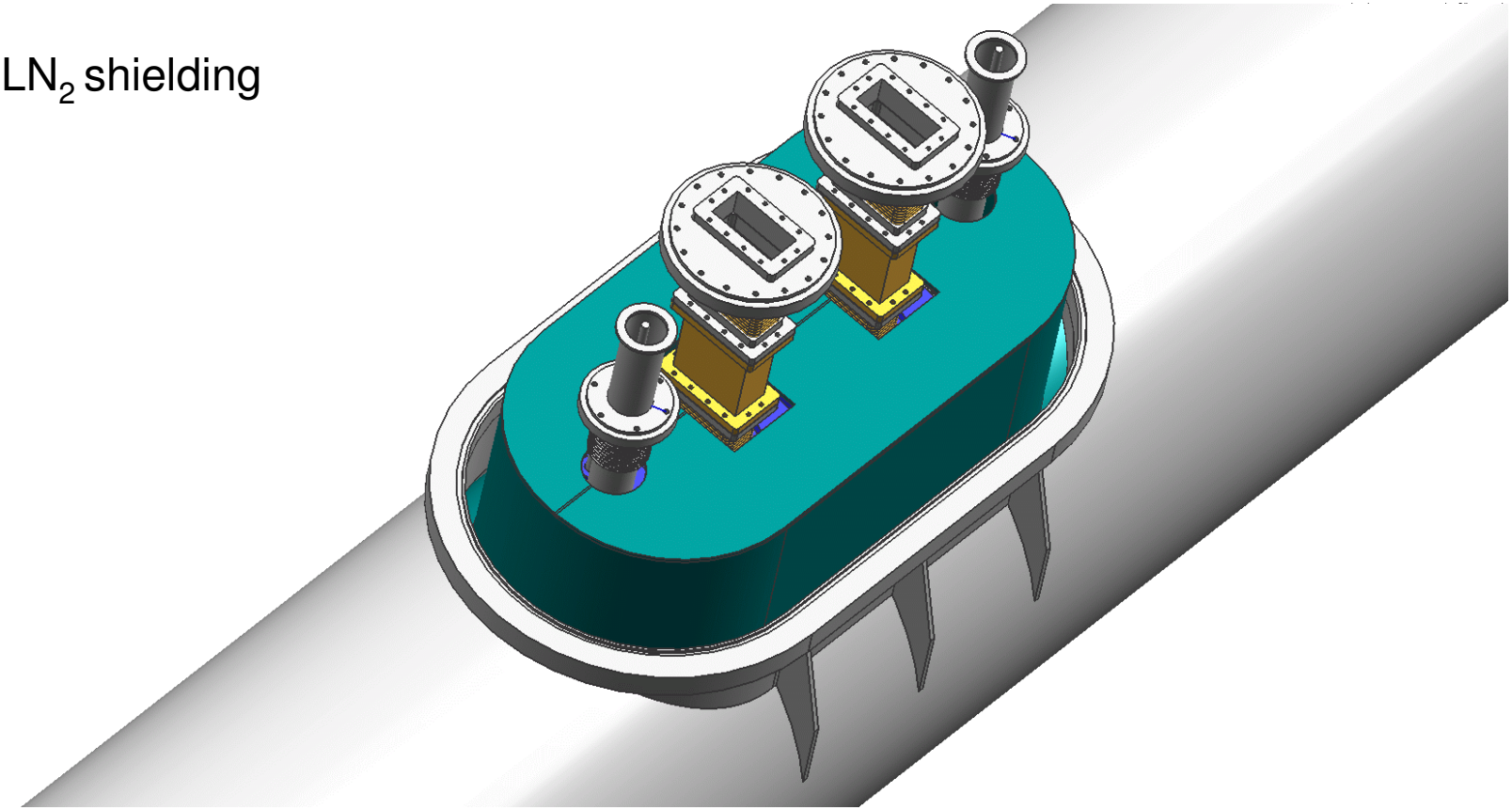

Cryostat design

TECHNISCHE UNIVERSITÄT DARMSTADT

Sealing the vaccum vessel

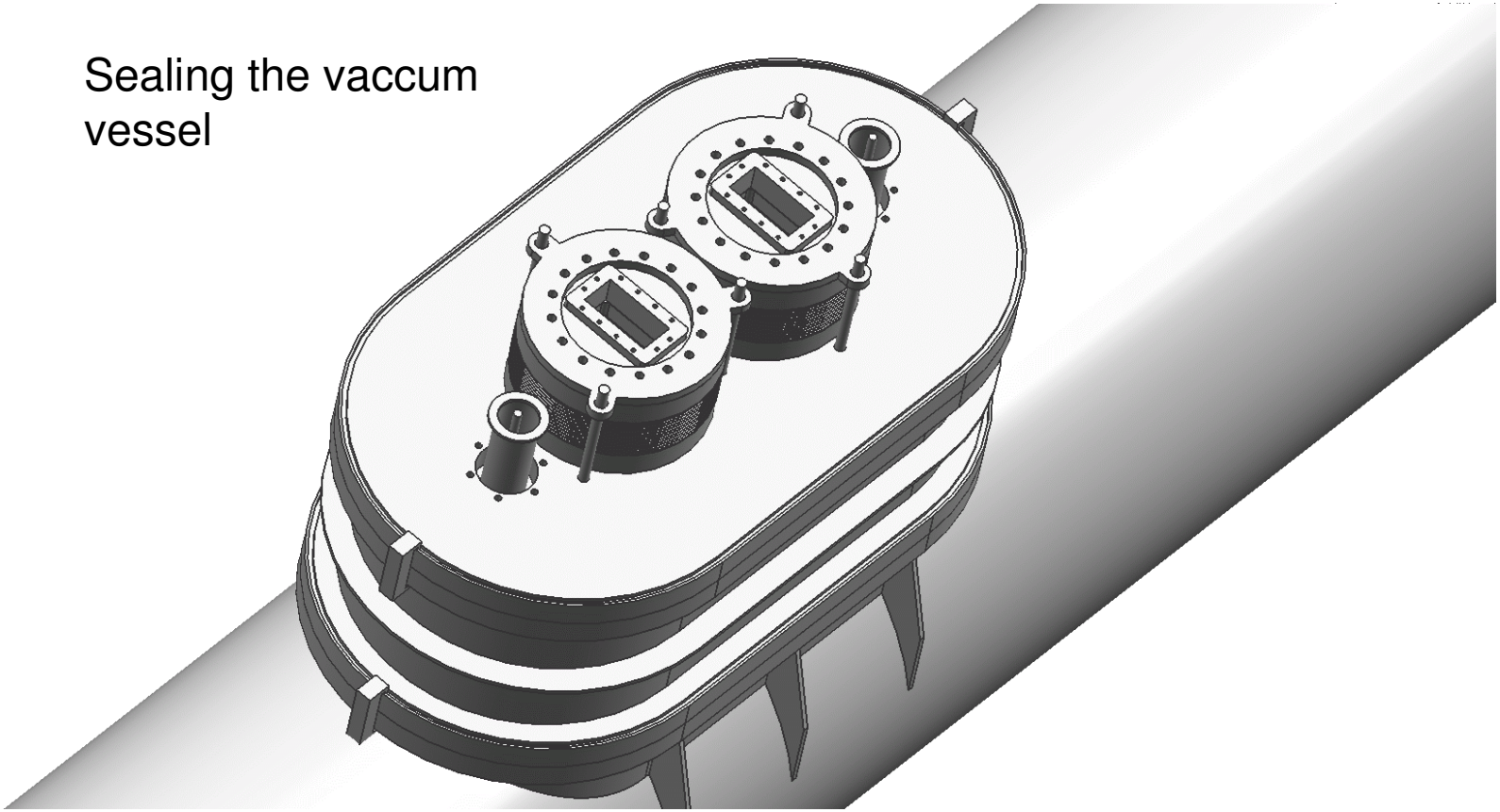

Cryostat design

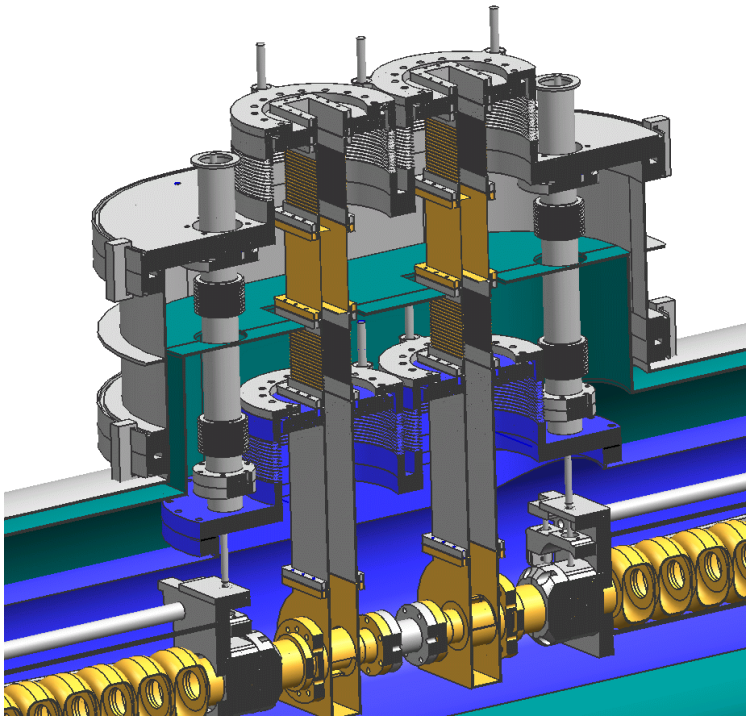

Cryostat design

TECHNISCHE UNIVERSITÄT DARMSTADT

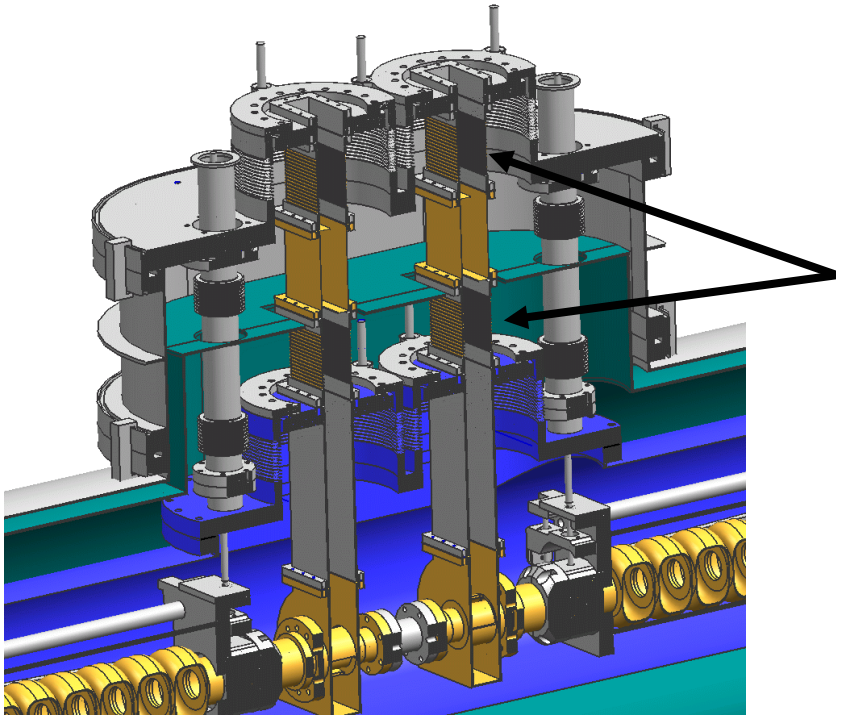

Flexible WR-284 waveguides (custom product)

- stainless steel
- copper coated

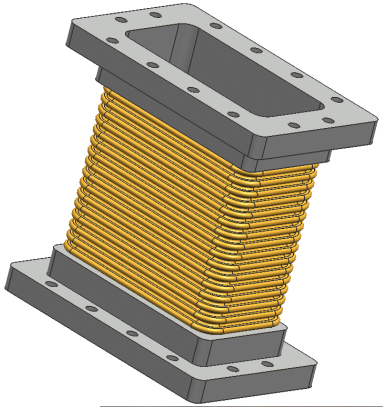

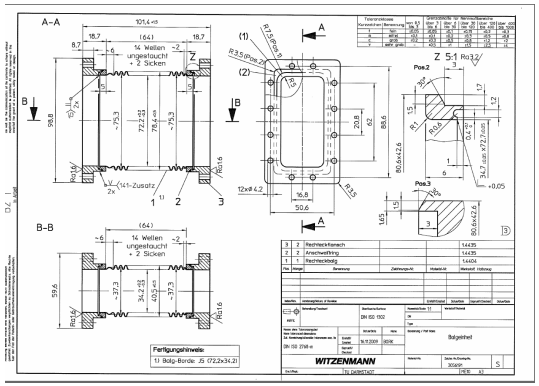

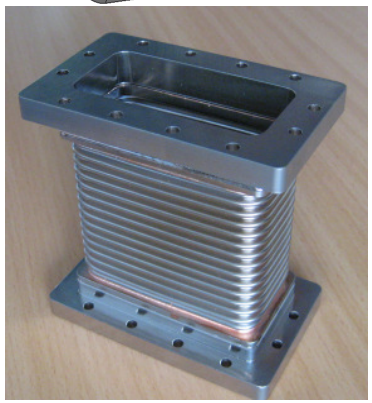

Cryostat design

TECHNISCHE UNIVERSITÄT DARMSTADT

Special waveguide for heat radition intercept

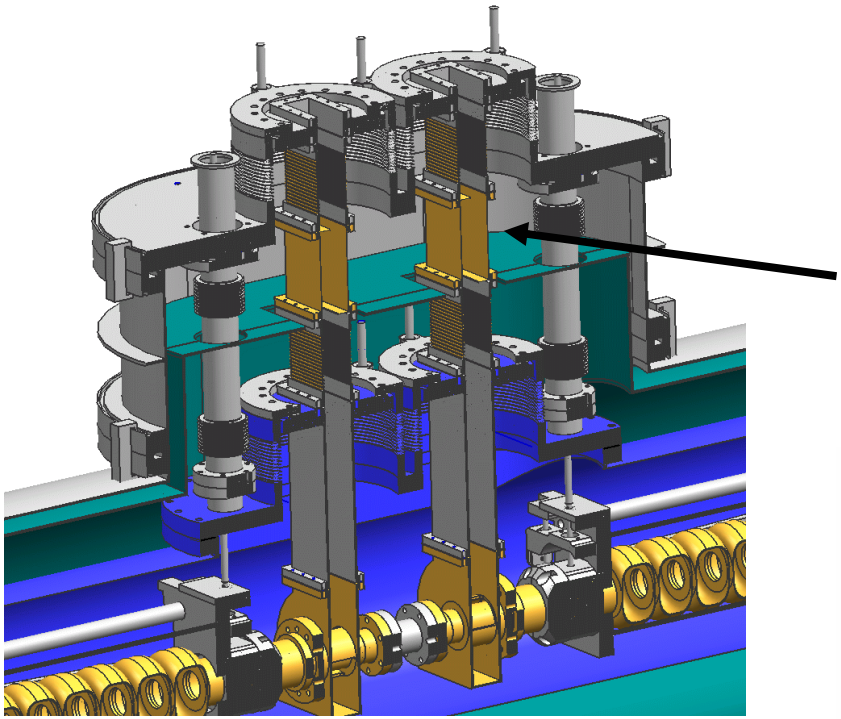

(~70% of the heat radition)

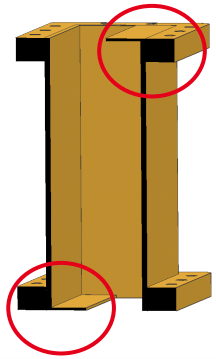

small bars inside the waveguide cooled down to 77 K

with the appropriate distance RF reflection is minimized at working frequency

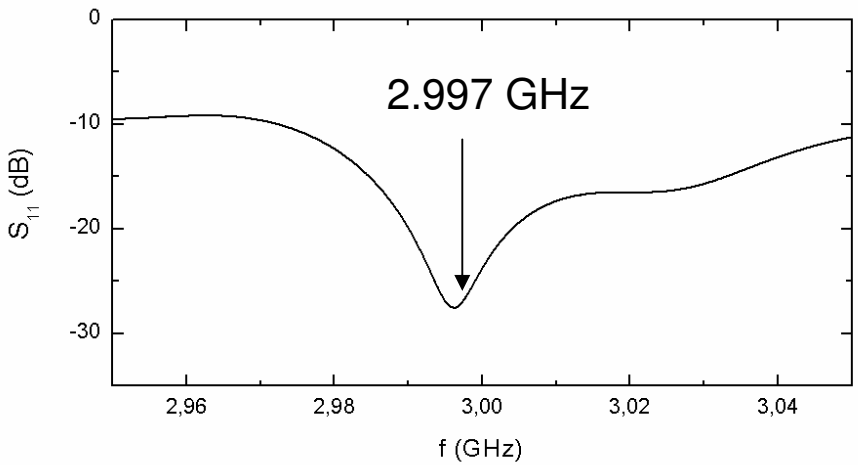

Losses due to heat radiation in the transition lines < 1 W

Cryostat design

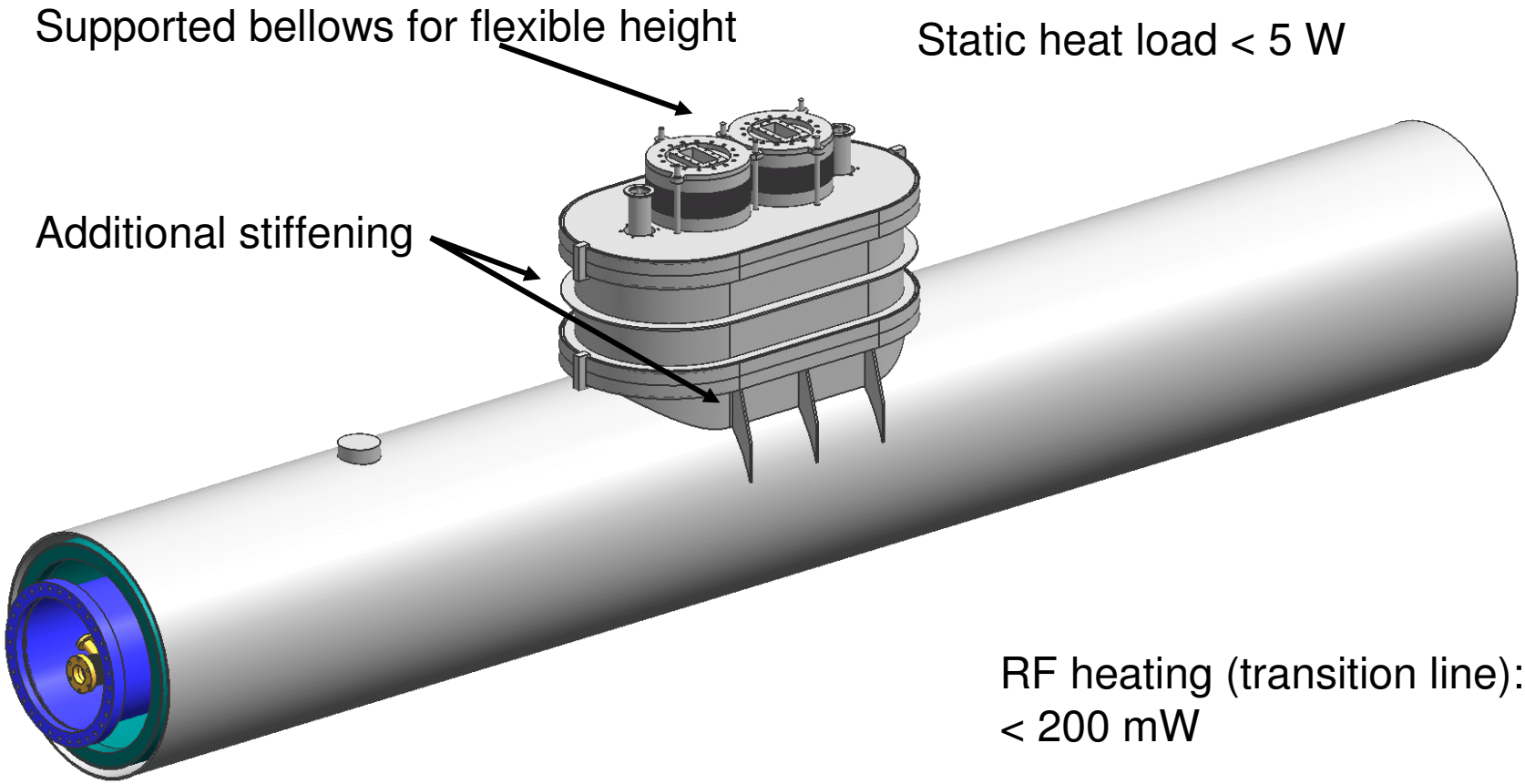

Finally,…

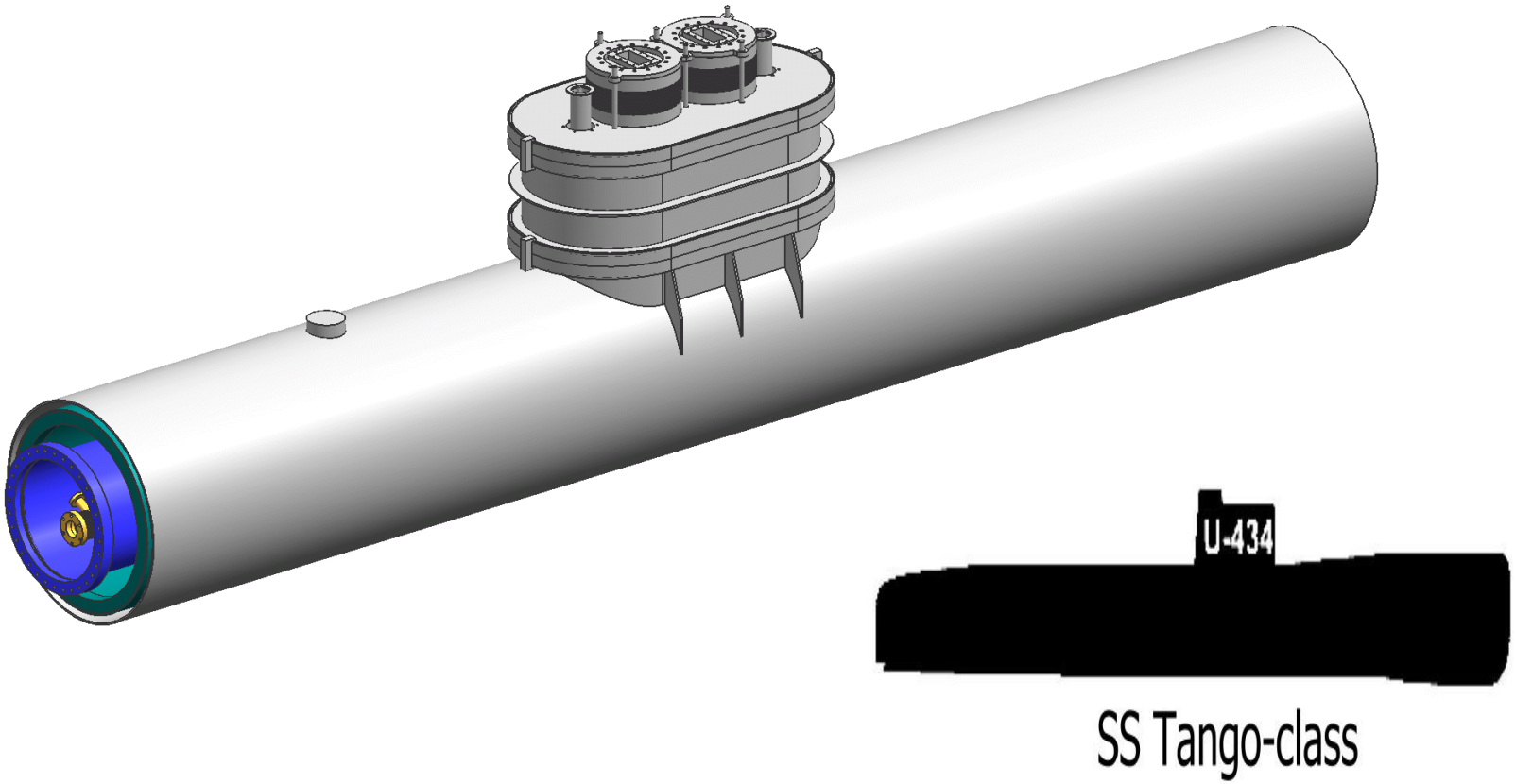

…it is built.

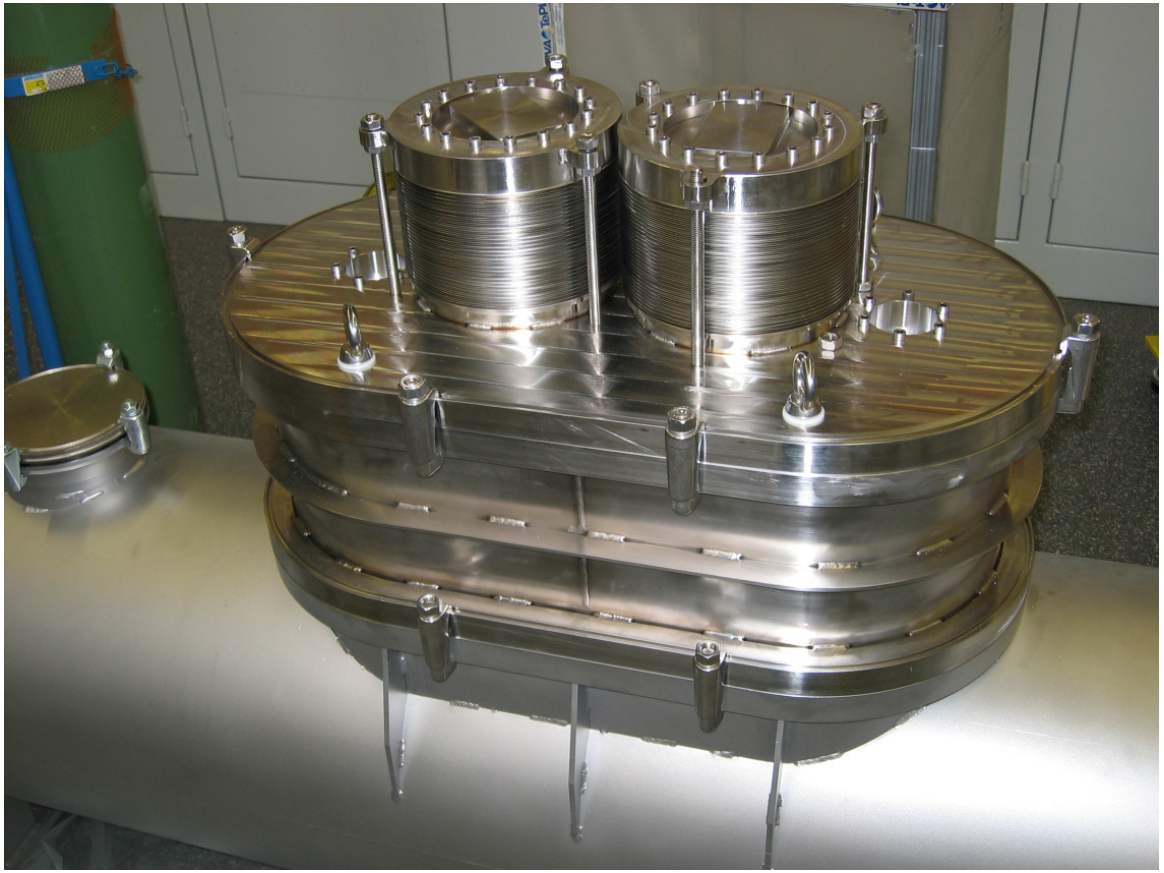

Delivery was last week.

SRF cavities

TECHNISCHE UNIVERSITÄT DARMSTADT

- S-DALINAC cavities
- Field profile measurement & field flatness tuning
- Production of the new cavities / production steps

S-DALINAC cavities

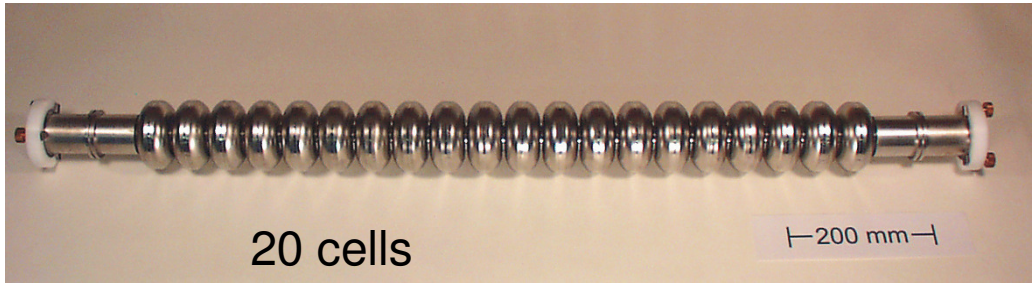

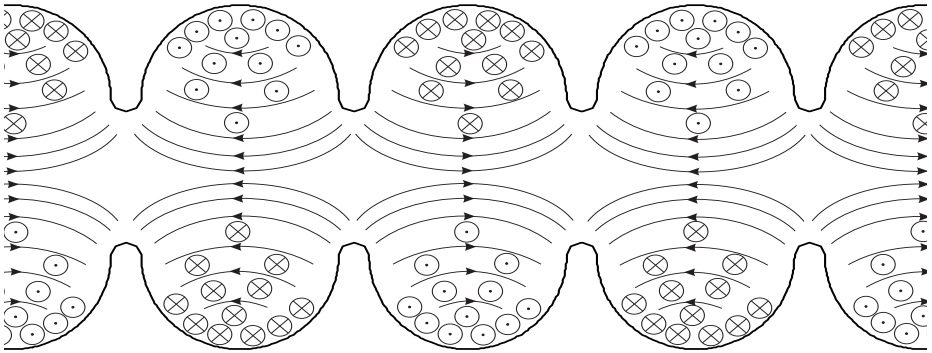

Material:	Niob
Length:	1 m
Freq.:	2.997 GHz
Mode:	TM_{010},π
Temp.:	2 K
E_{acc}:	5 MV/m
Q_0:	$3 \cdot 10^9$
P_{dis}:	4.2 W

Field profile measurement

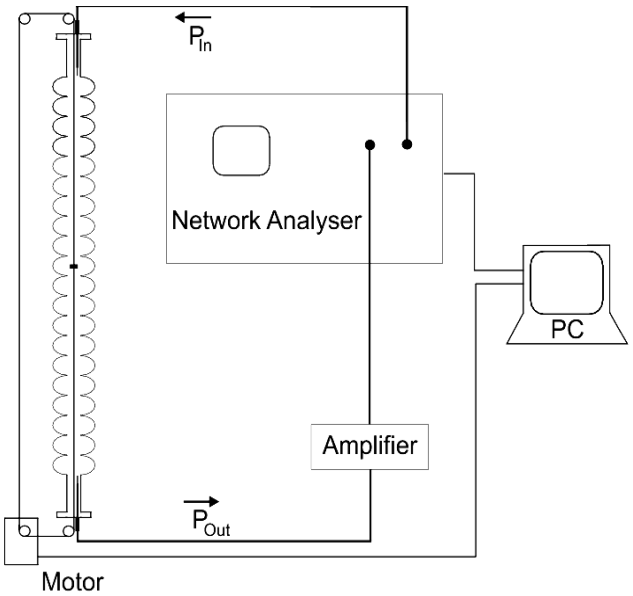

$$\frac{\Delta f}{f} = -\frac{\varepsilon\varepsilon_0 V_S}{4U} E^2$$

$$\Delta\varphi \propto \Delta f \propto E^2$$

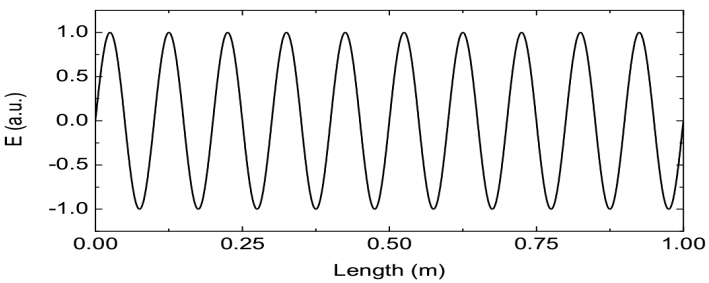

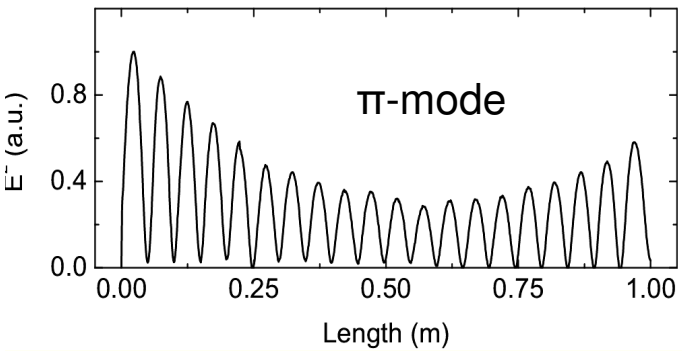

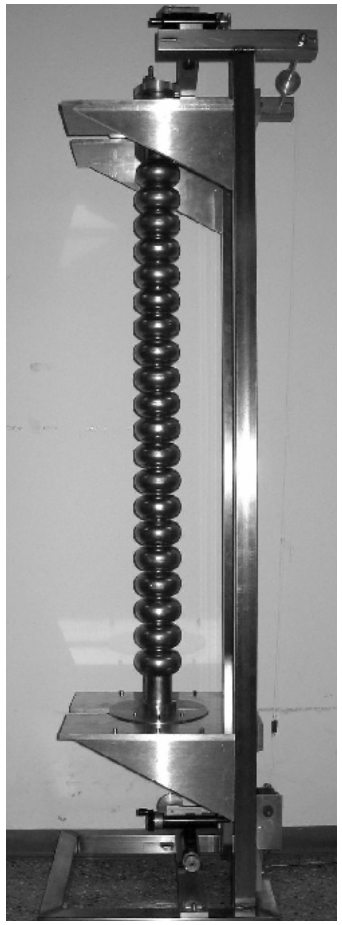

Field flatness tuning

- Compressing a single cell lowers the electric field strength in this cell and and decreases also the frequency
- Stretching a single cell increases the electric field strength in this cell and increases also the frequency

- An algorithm can be used to reach the field flatness

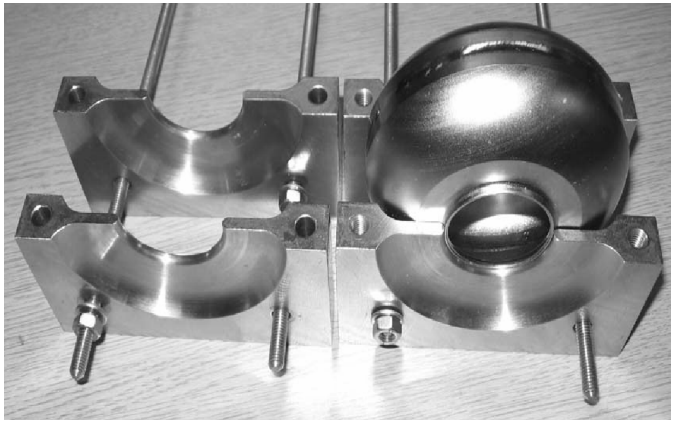

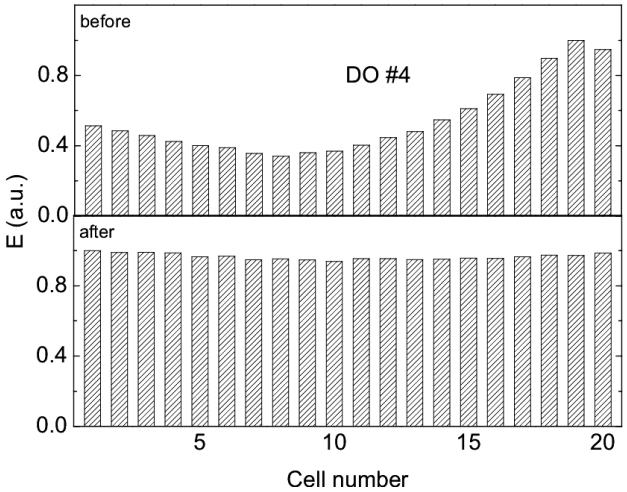

New cavities

- Actual cavities were produced between the years 1988 – 1990 by fabricating single cells first.

- We now change the process to dumbbell production.

Advantage:
- π-mode of dumbbell and cavity are about the same value
- Better control of the iris weld

Frequency @ 2K:	2.997 GHz
Frequency @ 300K:	2.992 GHz
Frequency before chemical treatment:	
1990:	2.9935 GHz
Now:	2.996 GHz

Measured with Cu dummy

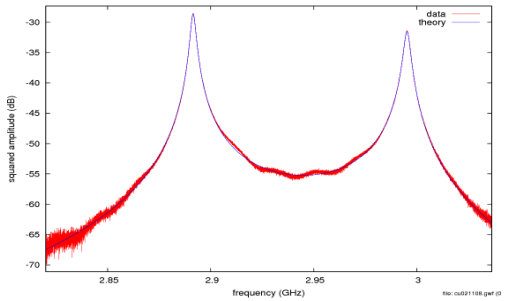

0-mode:
2.89147 GHz

π-mode:
2.99523 GHz

Dumbbell measurement set-up

TECHNISCHE UNIVERSITÄT DARMSTADT

- Dumbbells were produced with excess length
- Length and frequency measurement before trimming

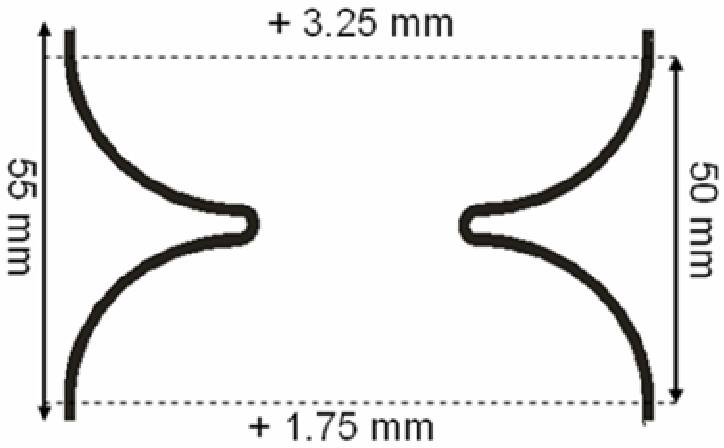

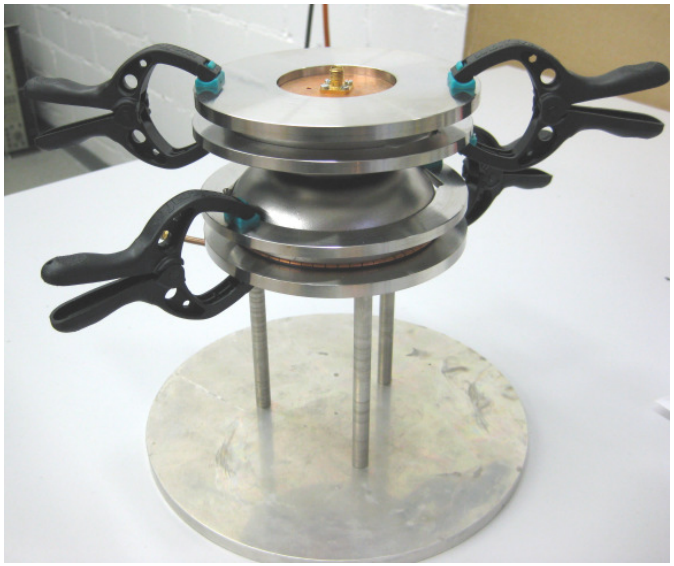

- Dumb-bell between copper plates
- Clamps to achieve good electr. contact
- Antenna ports for connection to NWA
- Field symmetry can be measured, too

Tuning possibilities

TECHNISCHE UNIVERSITÄT DARMSTADT

trimming

↓ ~11.5 MHz/mm

increase

compressing streching

↓ ~500 kHz/mm ↓

decrease increase

impressing

↓

increase

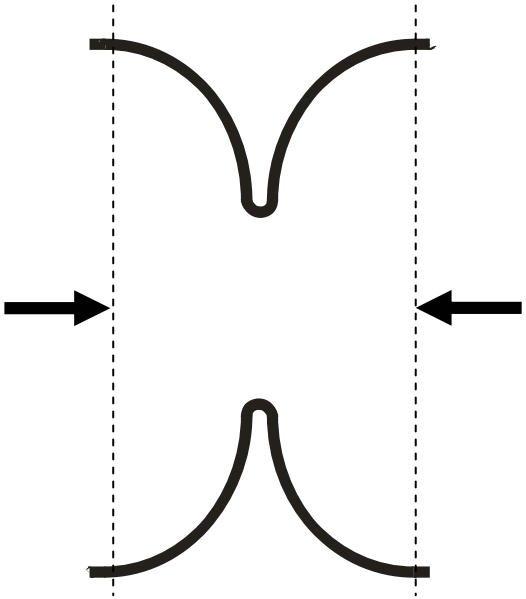

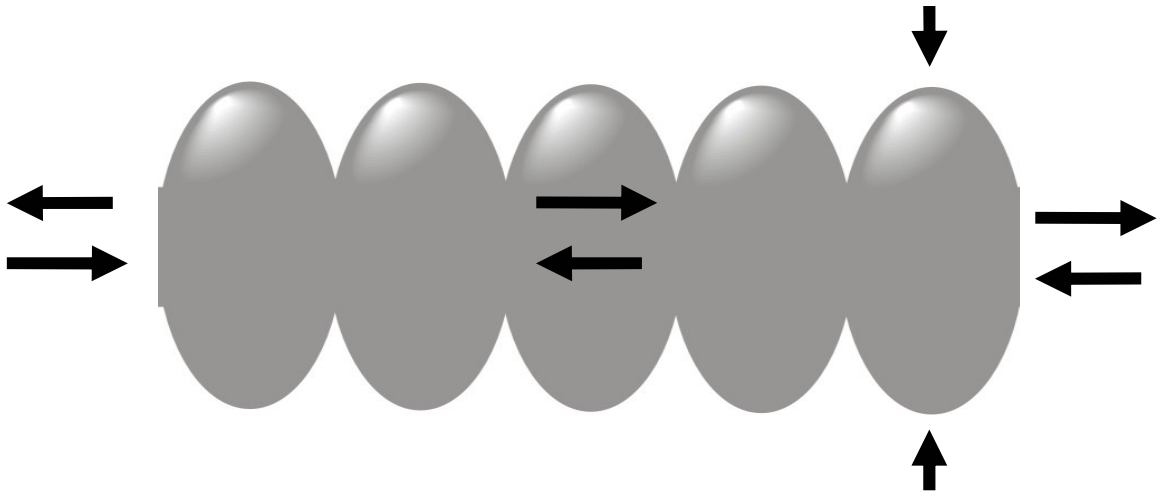

BCP treatment → ~25 kHz/µm

Cavity production steps

- **Measure length and frequency of all dumbbells before trimming**
- Calculate the trimming
- Measure the dumbbells after the trimming
- Selection of dumbbell order
- EB-welding
- Length, frequency and field profile measurement of the cavity
- Frequency and field profile tuning
- Chemical treatments (100-160 µm)
- Final tuning

Dumbbell measurement

TECHNISCHE UNIVERSITÄT DARMSTADT

- After delivery all dumbbells were measured
- Frequency was higher than expected

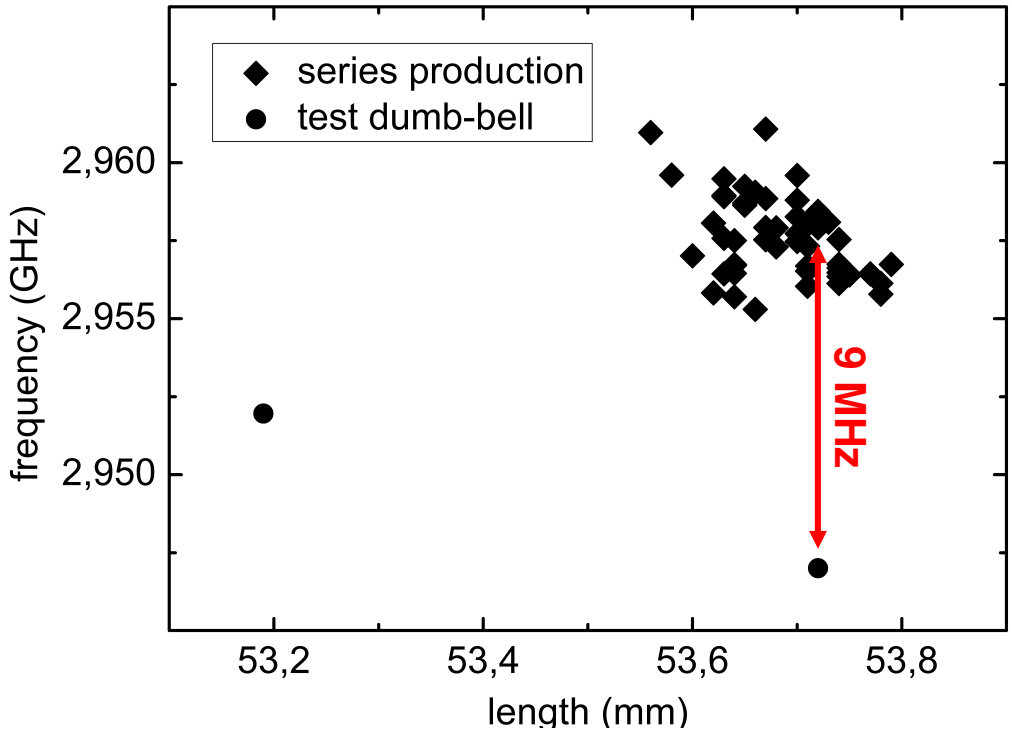

pi-mode freq.

Dumbbell measurement (trimming)

TECHNISCHE UNIVERSITÄT DARMSTADT

Trimming gradient had been checked again with 3 dumbbells from series prod.

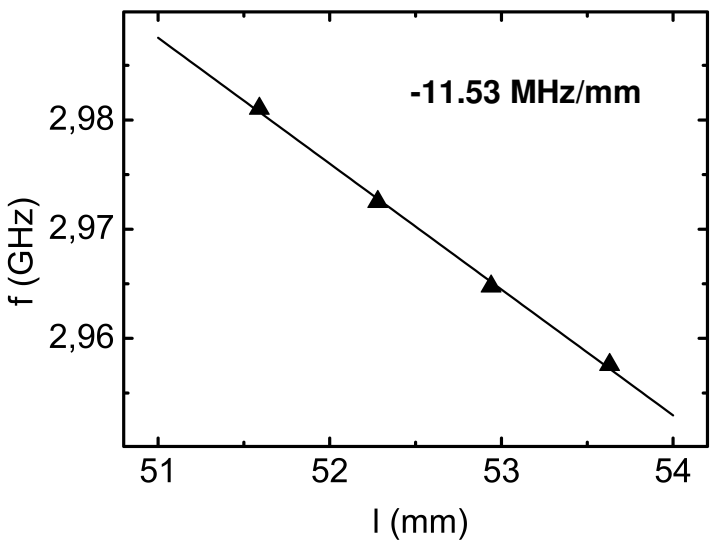

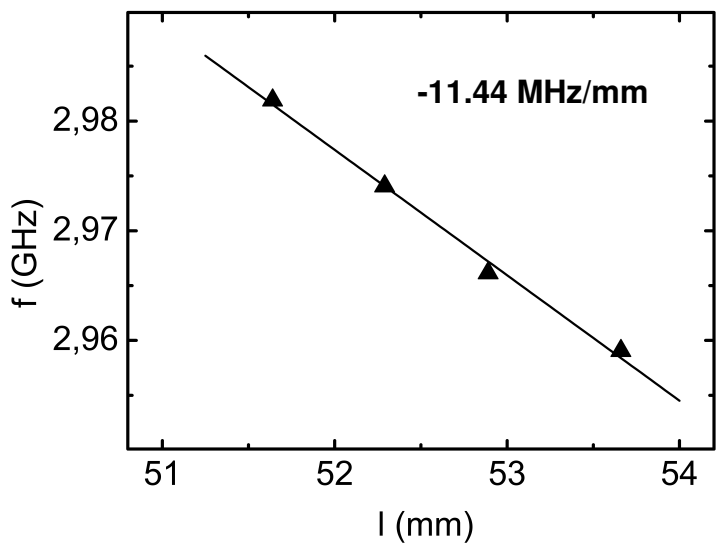

Trimming gradient was the same value

Cavity production steps

TECHNISCHE UNIVERSITÄT DARMSTADT

- Measure length and frequency of all dumbbells before trimming
- **Calculate the trimming** ⟶ **producing only one cavity first**
- Measure the dumbbells after the trimming
- Selection of dumbbell order
- EB-welding
- Length, frequency and field profile measurement of the cavity
- Frequency and field profile tuning
- Chemical treatments (100-160 µm)
- Final tuning

Calculate the trimming

Problem:
On average: the dumbbells would be to long at the right frequency after the trimming.

Solution:
Do some 0.1 mm more trimming (higher frequency).
Then compress the dumbbell to lower the frequency and end up at the right length.

Trimming gradient: + 11.5 MHz / mm
Compressing: - 10 MHz / mm

Add the recess and the shrinkage due to welding (0.3 - 0.35 mm).

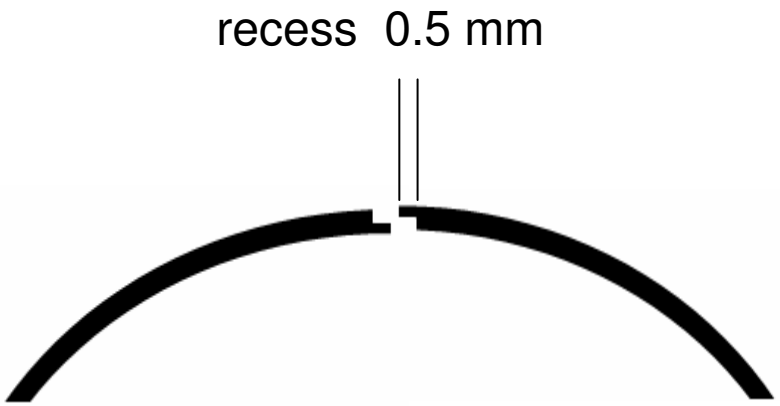

Cavity production steps

- Measure length and frequency of all dumbbells before trimming
- Calculate the trimming
- **Measure the dumbbells after the trimming**
- Selection of dumbbell order
- EB-welding
- Length, frequency and field profile measurement of the cavity
- Frequency and field profile tuning
- Chemical treatments (100-160 µm)
- Final tuning

On average: the dumbbells came out to short and frequency to high. (~0.2 mm and ~ 2.8 MHz)

→ Cavity will be 4 mm shorter

Cavity production steps

TECHNISCHE UNIVERSITÄT DARMSTADT

- Measure length and frequency of all dumbbells before trimming
- Calculate the trimming
- Measure the dumbbells after the trimming
- **Selection of dumbbell order**
- **EB-welding**
- Length, frequency and field profile measurement of the cavity
- Frequency and field profile tuning
- Chemical treatments (100-160 µm)
- Final tuning

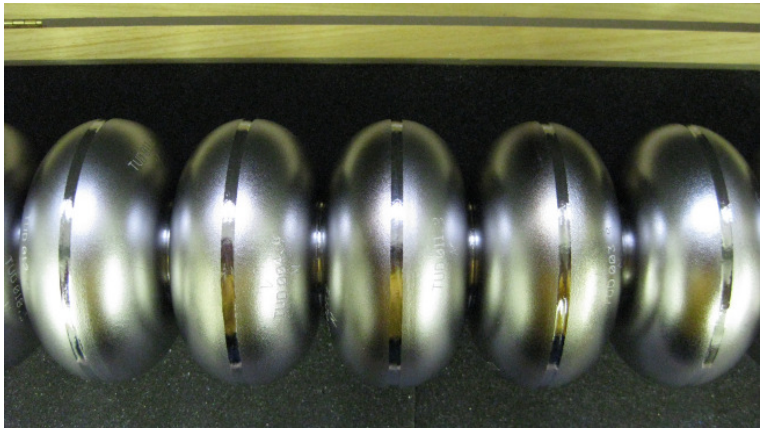

Cavity production steps

TECHNISCHE UNIVERSITÄT DARMSTADT

- Measure length and frequency of all dumbbells before trimming
- Calculate the trimming
- Measure the dumbbells after the trimming
- Selection of dumbbell order
- EB-welding
- **Length, frequency and field profile measurement of the cavity**
- **Frequency and field profile tuning**
- **Chemical treatments (100-160 µm)**
- **Final tuning**

Length & frequency

- Cavity 4.18 mm shorter than expected
- Total length: 1006.8 mm
- Frequency: 3.0012 GHz

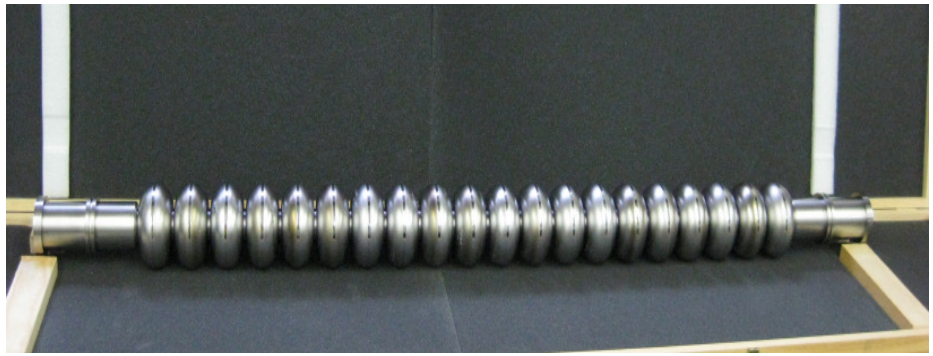

- Frequency ~ 5 MHz to high
- 10 mm compression would be needed

- End up at 996.8 mm length
  = 3.2 mm to short

Field profile after welding

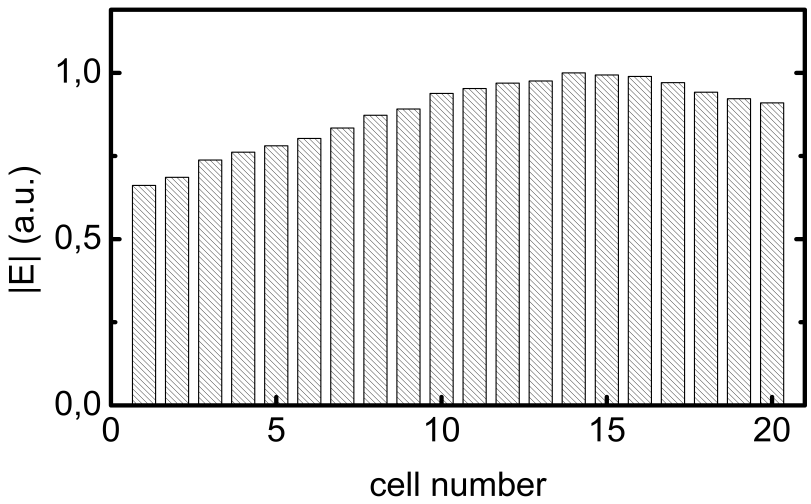

First cavity (final prod. steps)

TECHNISCHE UNIVERSITÄT DARMSTADT

Production step	Length (mm)	Freq. (GHz)
Dumb-bells connected before eb-welding	1012.57	
Cavity after EB-welding	1006.80	3.00124
Compressing and field flatness tuning	1002.45	2.99815
First BCP treatment (181µm) at RI	1004.45	2.99456
Frequency and field flatness tuning	999.70	2.99238

What saved us?

TECHNISCHE UNIVERSITÄT DARMSTADT

trimming ↓ ~11.5 MHz/mm increase

compressing ↓ ~500 kHz/mm decrease

streching ↓ increase

impressing ↓ increase

This gradient was almost -750 kHz/mm during the first compression

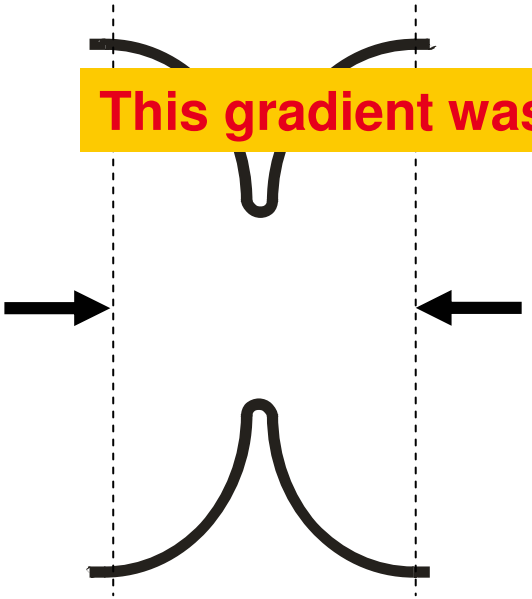

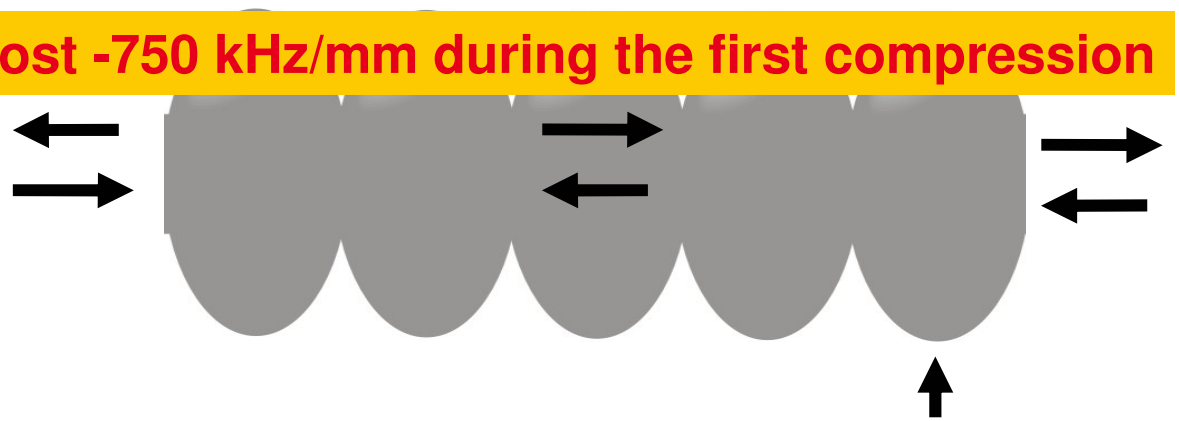

BCP treatment → ~25 kHz/µm

Outlook

TECHNISCHE UNIVERSITÄT DARMSTADT

- Start assembly of the cryostat module (cavity, couplers, tuners & WGs)
- Next two cavities should be EB-welded this summer
- 800 °C bake out of the cavities in-house
- Final chemical polishing in-house
- Offline test of the assembled module: October-December 2011
- Integration in the accelerator: depends on beam-time calender of the nuclear physics groups

Thank you

TECHNISCHE UNIVERSITÄT DARMSTADT

S-DALINAC operators at SRF conference:

Ralf Eichhorn ?

Sven Sievers

Thanks to:

TECHNISCHE UNIVERSITÄT DARMSTADT

- **Institut für Kernphysik, TU Darmstadt**

  J. Conrad, R. Eichhorn, F. Hug, T. Kürzeder, A. Richter, S. Sievers

- **Institut für Theorie Elektromagnetischer Felder, TU Darmstadt**

  W. F. O. Müller, T. Weiland

AND…

MHF-sl group @ DESY **J. Iversen, G. Kreps**

ANL **J. Fuerst**

Field profile measurement

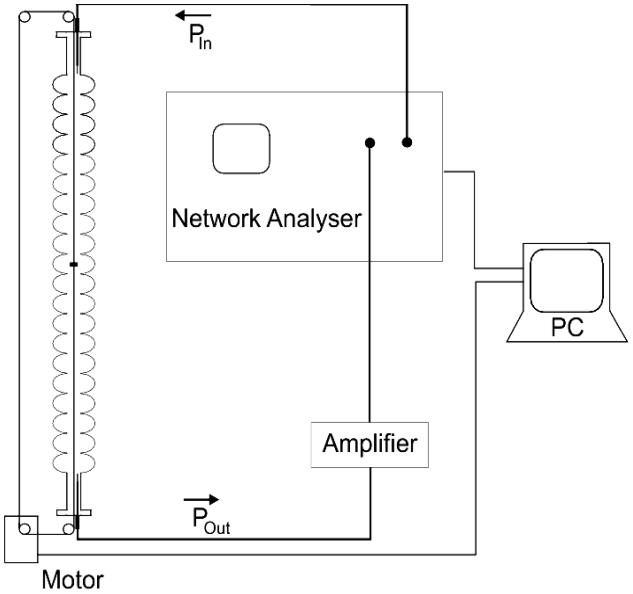

$$\frac{\Delta f}{f} = -\frac{\varepsilon\varepsilon_0 V_S}{4U} E^2$$

$$\Delta\varphi \propto \Delta f \propto E^2$$

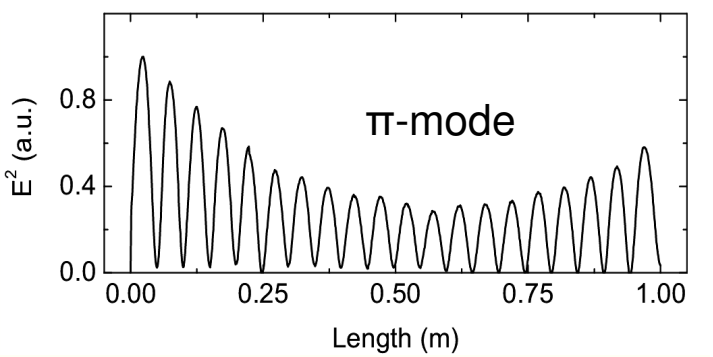

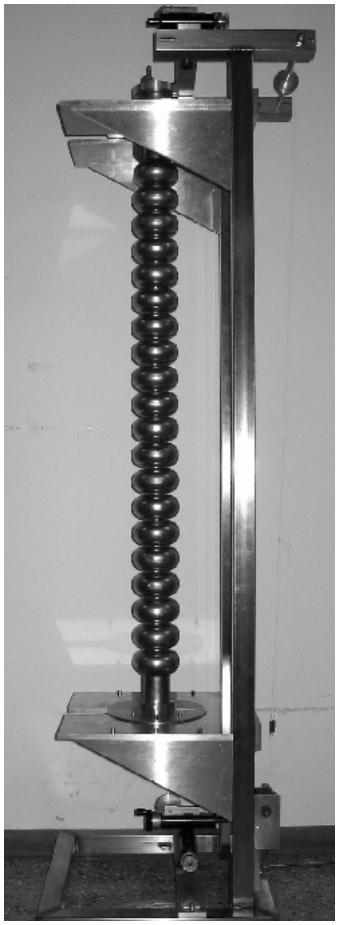

Tuning algorithm

Cavity described by an eigenvalue problem

$$M \cdot \vec{E} = \Omega^2 \cdot \vec{E}$$

$$M = \begin{pmatrix} \omega_1^2 & & & 0 \\ & \omega_2^2 & & \\ & & \ddots & \\ 0 & & & \omega_{20}^2 \end{pmatrix} \cdot K$$

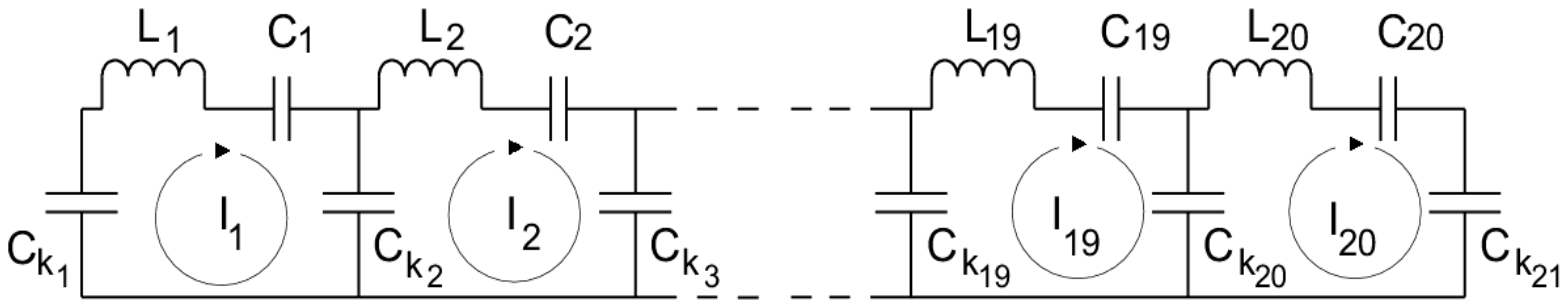

Tuning algorithm

$$\begin{pmatrix} \vec{E}_1^T \\ \vec{E}_2^T \\ \vdots \\ \vec{E}_{20}^T \end{pmatrix} \cdot M^T = \begin{pmatrix} \Omega_1^2 & & & 0 \\ & \Omega_2^2 & & \\ & & \ddots & \\ 0 & & & \Omega_{20}^2 \end{pmatrix} \cdot \begin{pmatrix} \vec{E}_1^T \\ \vec{E}_2^T \\ \vdots \\ \vec{E}_{20}^T \end{pmatrix}$$

Getting M by measurement of all eigenfrequencies and field profiles

$$M_{new} = D \cdot M$$

$$M_{new} = \begin{pmatrix} d_1^2 & & & 0 \\ & d_2^2 & & \\ & & \ddots & \\ 0 & & & d_{20}^2 \end{pmatrix} \cdot \begin{pmatrix} \omega_1^2 & & & 0 \\ & \omega_2^2 & & \\ & & \ddots & \\ 0 & & & \omega_{20}^2 \end{pmatrix} \cdot K$$

Manipulate M by changing each cell-frequency by d_i

Tuning algorithm

$$D \cdot M \cdot \vec{E}_{20,soll} = \Omega^2_{20,soll} \cdot \vec{E}_{20,soll}$$

$$\Omega_{20,soll} \approx 2{,}992 GHz \qquad \vec{E}_{20,soll} = \frac{1}{\sqrt{20}} \begin{pmatrix} 1 \\ -1 \\ \vdots \\ 1 \\ -1 \end{pmatrix}$$

Calculating D by using the demanded parameters

$$D_i = \begin{pmatrix} 1 & & & & \\ & \ddots & & & \\ & & d_i^2 & & \\ & & & \ddots & \\ & & & & 1 \end{pmatrix}$$

Construct 20 matrices D_i and multiply them by M one after another. Sort D_i by their value.

$$M_1 = D_1 \cdot M$$

$$M_i = D_i \cdot M_{i-1}$$

$$M_{20} = D_{20} \cdot M_{19} = M_{neu}$$

Tuning algorithm

Determine the eigenvalue of each M_i to get the mode frequencies after each tuning step.

Use the frequency spectrum at the NWA and compress/stretch the cell until the frequencies fit.
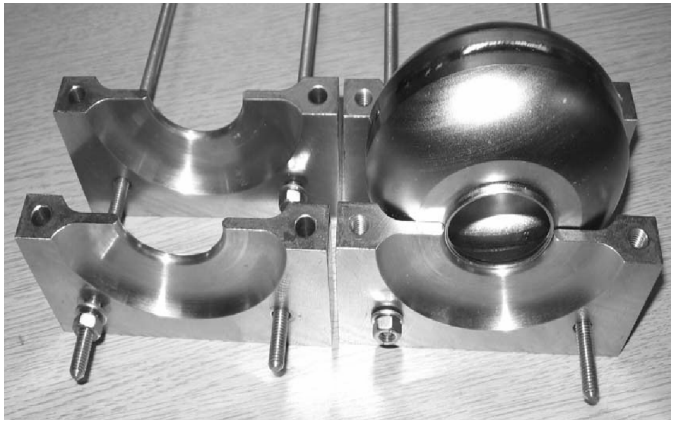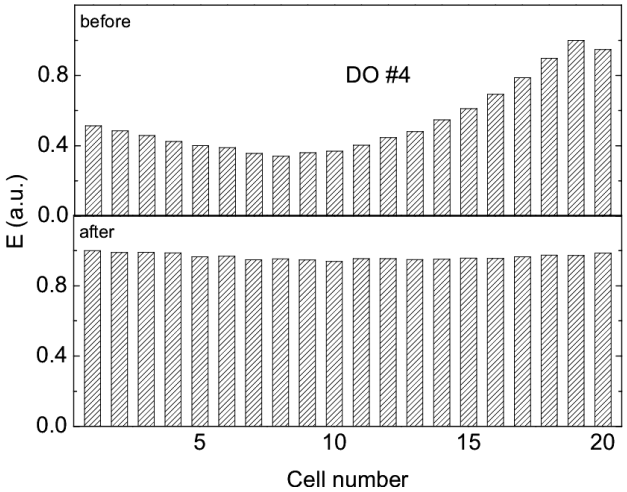
After 20 steps field flatness and operation frequency are reached.