Pre-injector Upgrade Updates (20 Jul 2011 – 03 Aug 2011)

C.Y. Tan

03 Aug 2011

News

- Reminder: review 01 Sep!

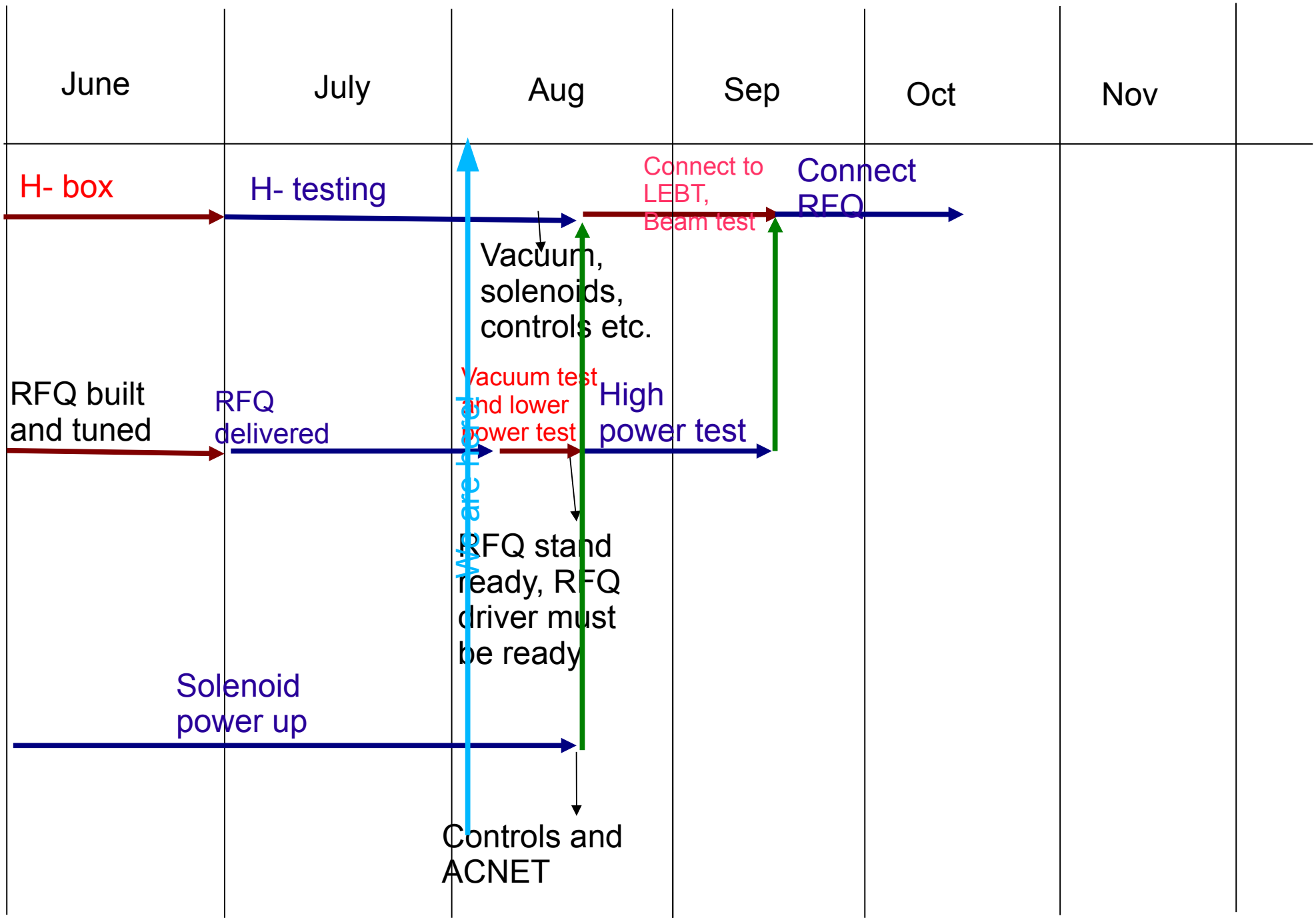
June
July
Aug
Sep
Oct
Nov
H- box
H- testing
Connect to LEBT, Beam test
Connect RFQ
Vacuum, solenoids, controls etc.
RFQ built and tuned
RFQ delivered
Vacuum test and lower power test
High power test
We are here!
RFQ stand ready, RFQ driver must be ready
Solenoid power up
Controls and ACNET

REV	DESCRIPTION	DRAWN	DATE
		APPROVED	DATE

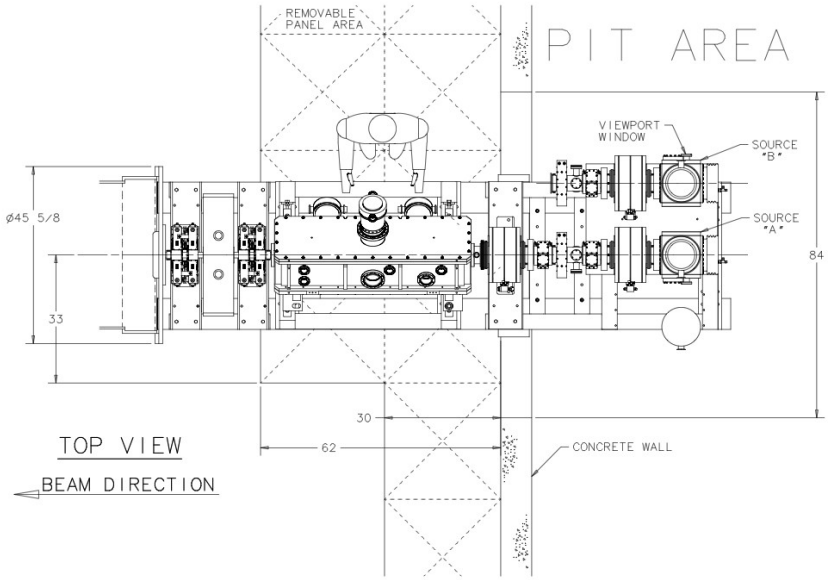

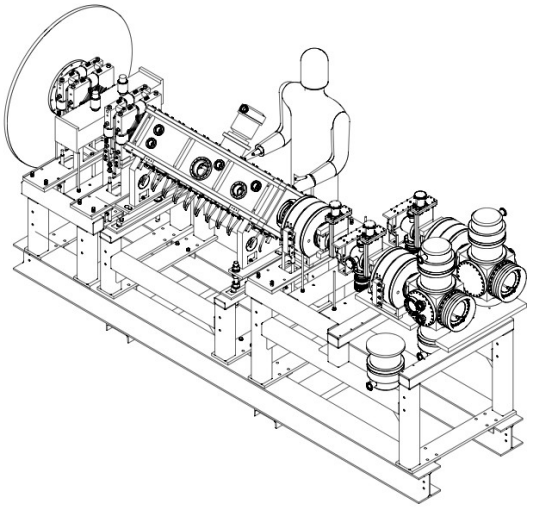

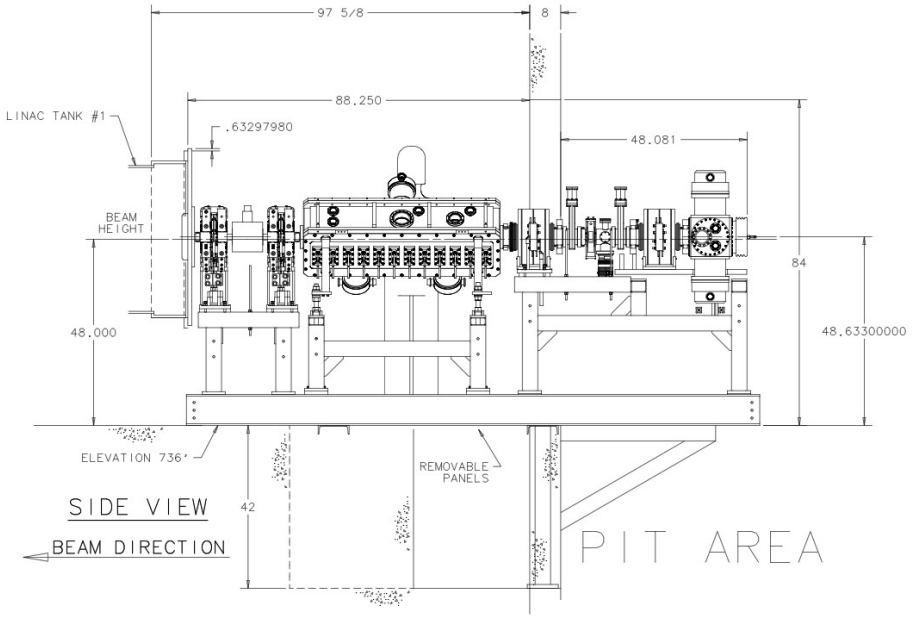

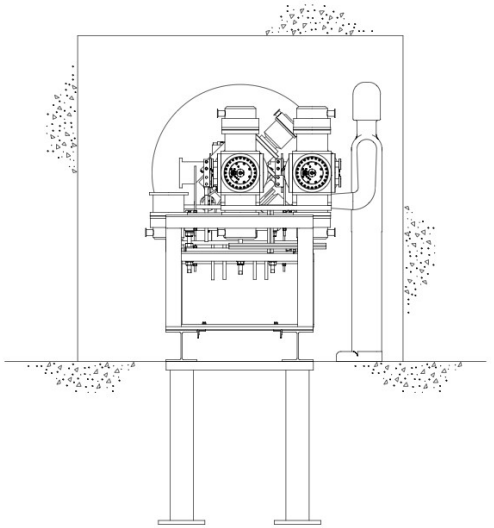

PREACCELERATOR PRELIMINARY LAYOUT

APRIL 27, 2011

UNLESS OTHERWISE SPECIFIED	ORIGINATOR	
± ± ±	DRAWN	
	CHECKED	
1. BREAK ALL SHARP EDGES MAX.	APPROVED	
2. DO NOT SCALE DRAWING. 3. DIMENSIONS BASED UPON ASME Y14.5M-1994 4. MAX. ALL MACH. SURFACES	USED ON	
5. DRAWING UNITS: U.S. INCH	MATERIAL	

FERMI NATIONAL ACCELERATOR LABORATORY
UNITED STATES DEPARTMENT OF ENERGY

SCALE	DRAWING NUMBER	SHEET	REV
	. — —	1 OF 1	

CREATED WITH : GROUP :

Created: 10:31:09 on 28-06-11 (D-M-Y) By: mkielar State: 1-INITIAL

Source Status

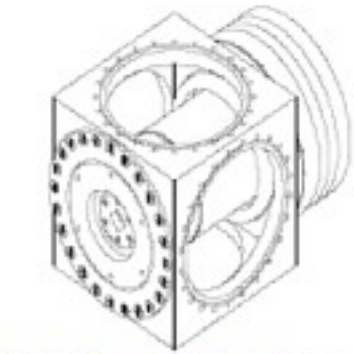

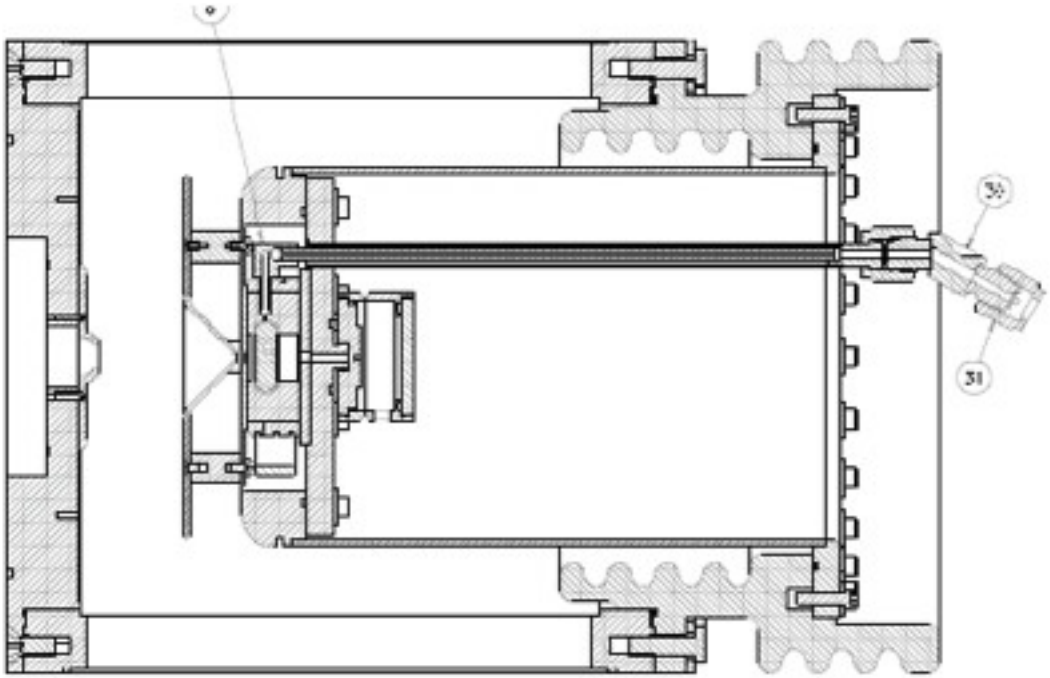

Device	Status	Comments
Source #2	Extracting at 71mA	Short between anode and cathode. Being fixed.

LEBT Status

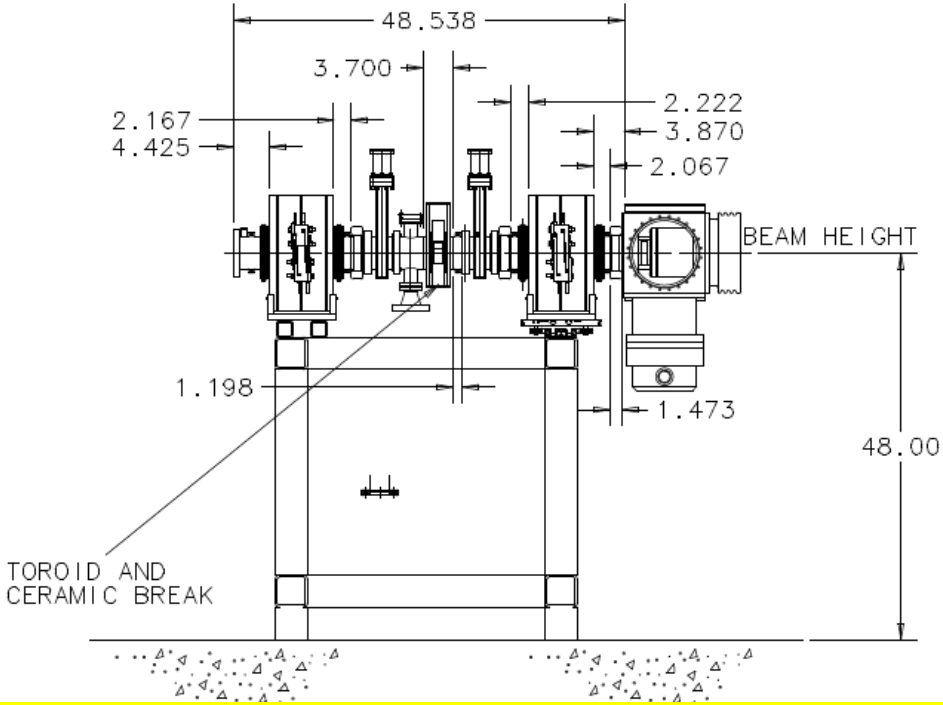

Device	Status	Comments
Solenoid PS	Ready to test solenoids	Safety review is done (29 Jun)
Solenoids	#4 wound	waiting for welding and potting (27 July)
LEBT drawings	Being drawn	Bellows ordered End of June to early July delivery.
Correctors	drawings OK'ed manufacturing should proceed	Parts should be ordered soon. Aug?
Solid state switches	Have quote	Requisition is in the system.
LEBT stand	Out for bid	Bids close on 01Aug

RFQ Status

- Shipped! (28 Jul 2011)
- Should arrive on Thu 04 Aug 2011.
- Start assembly of RFQ stand in test area.

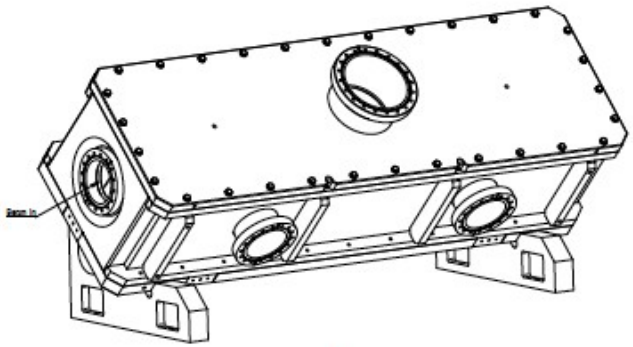

15

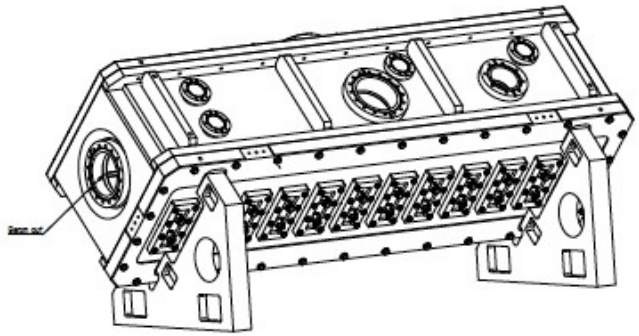

Device	Status	Comments
4816 PA	have mains control/power. turned on the bias and filaments ps's	problems with a lcw flow switch, cabinet door switch, and control/reset chassis.

MEBT Status

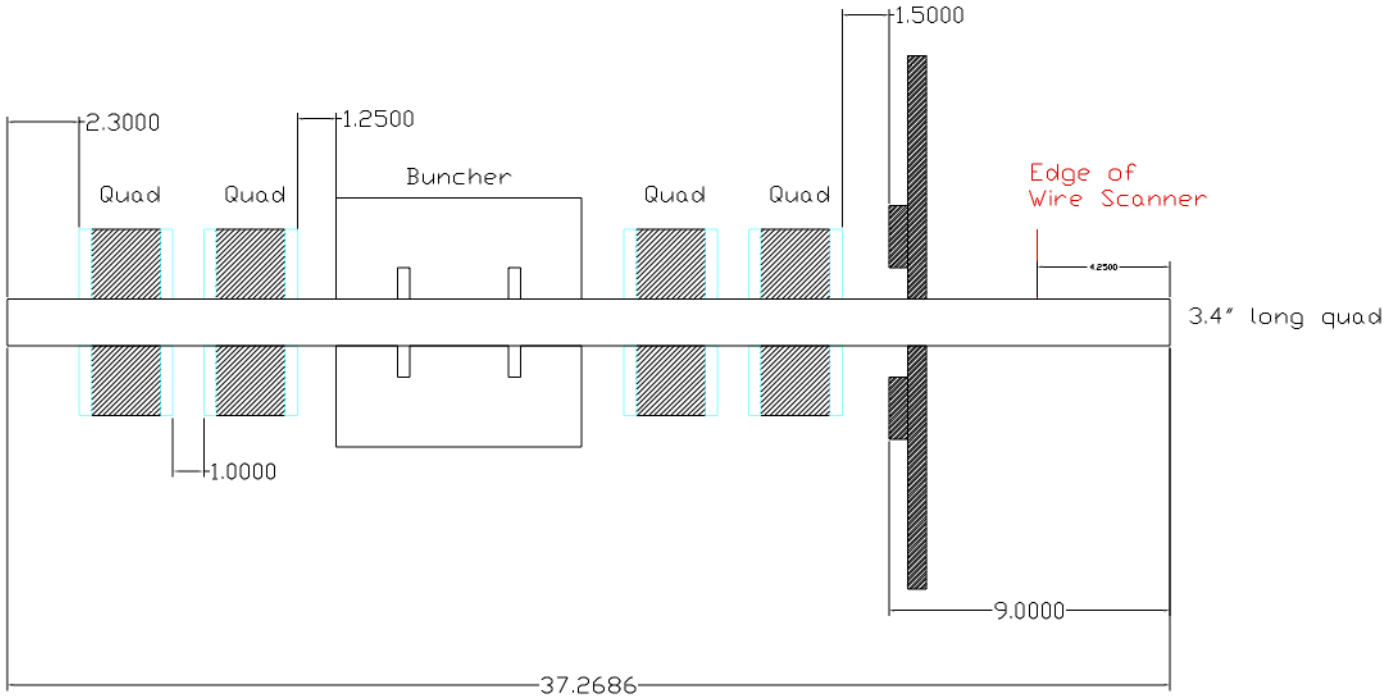

Device	Status	Comments
Quads	Coil winding has started (17 May)	All quad coils are complete (28 Jun). Dipole coils for 2 magnets complete. Potting has started. Cores will be delivered in mid Aug. 1st magnet in Oct. (No change?)
Buncher	Bead pull station ok	Measurements have started
Power for quads	Specs to follow	Quads being redone.
Power for buncher		Use present buncher supply in the line.

Start assembly of RFQ stand

Proposed test area layout

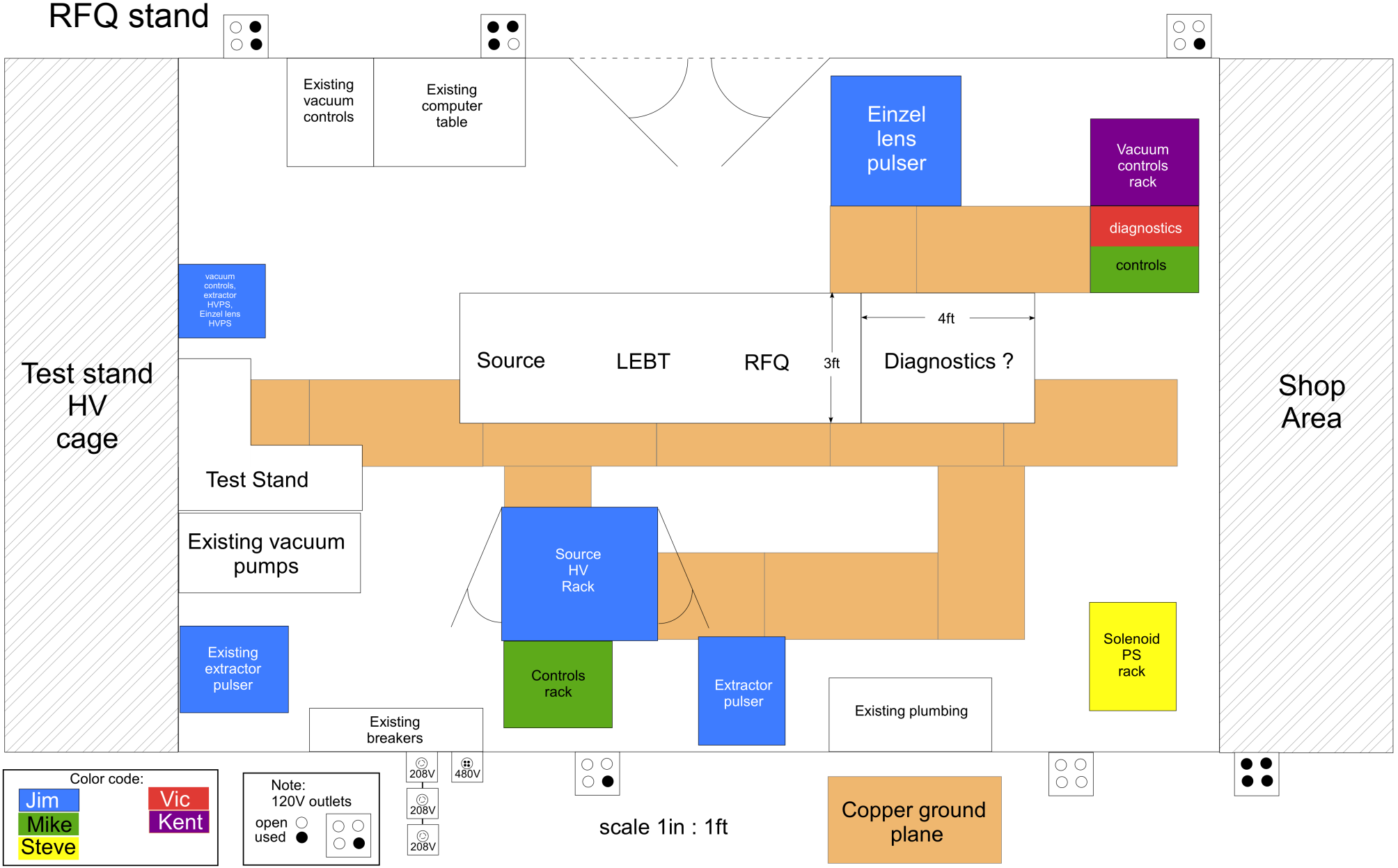

Test area, test stand and instrumentation

Device	Status	Comments
MW can	Done	27 Jul
MW electronics		Done by 30 July. (20 Jul)
Instrumentation stand	Delayed by NUMI	
emittance probes can	In drafting	
New source PS	started installation (06 July)	
#2 source	Started assembly (20 July)	

Needs update?

Controls

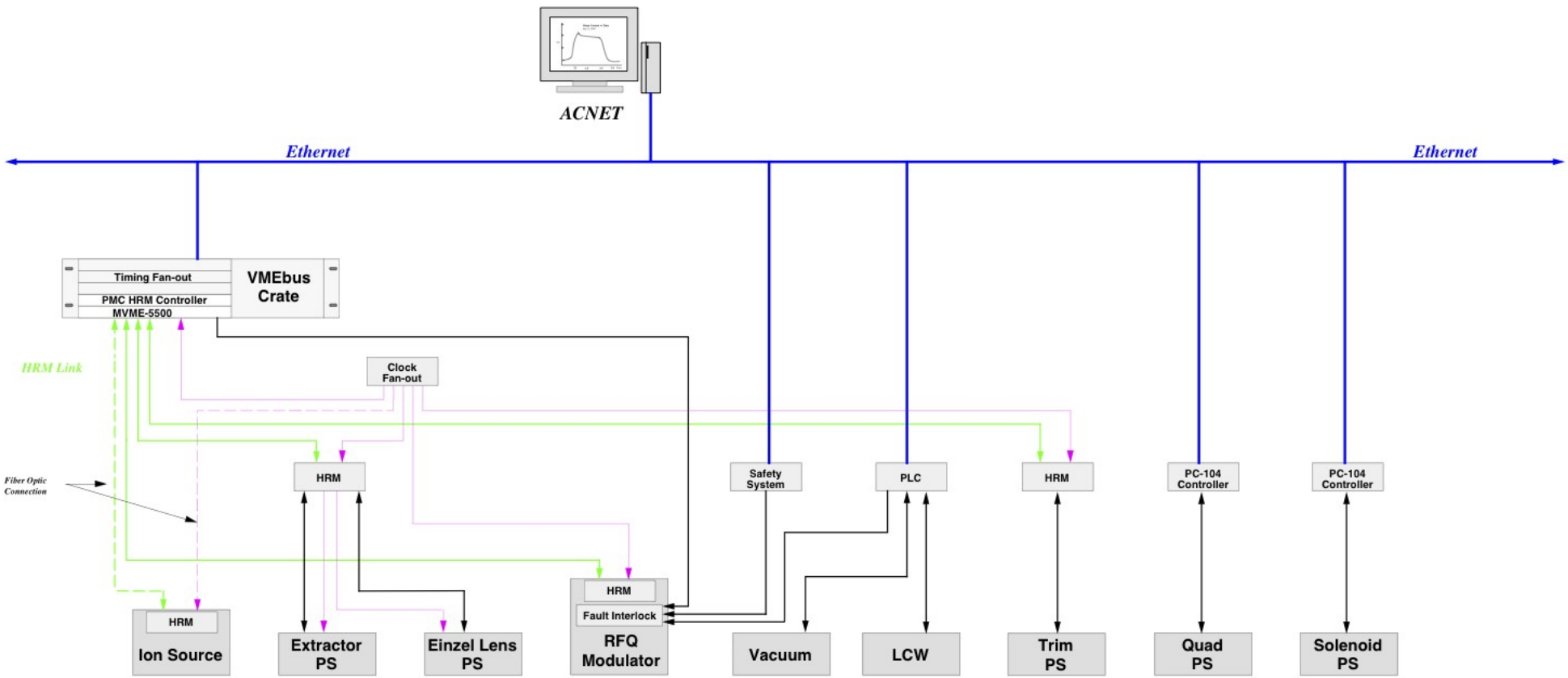

Linac RFQ Upgrade Controls Block Diagram

Safety