Pre-injector Upgrade Updates (17 Aug 2011 – 14 Sep 2011)

C.Y. Tan

14 Sep 2011

Review (01 Sep 2011)

- 8:30 – 9:00 Executive Session (closed) 30'
- 09:00 – 09:20 Introduction and Overview 20' Speaker: william pellico (FNAL)
- 09:20 – 09:50 Integration/Beam Matching(RFQ/Injector Design) Issues 30' Speaker: Cheng-Yang Tan (Fermilab)
- 09:50 – 10:10 Ion Source Design and Status 20' Speaker: Dan Bollinger (Tevatron Department)
- 10:10 - 10:40Installation and Commissioning Plan 30' Speakers: Mary Convery (Fermilab) , william pellico (FNAL)
- 10:40 – 11:00 Coffee
- 11:00 – 11:30 Instrumentation and Control Plan 30' Speakers: Vic Scarpine (Fermilab) , Elmie Peoples-Evans (Fermilab)
- 11:30 – 12:00 Issues, worries, and contingency plans 30' Speaker: Cheng-Yang Tan (Fermilab)
- 12:00 – 13:30 Lunch (Executive Session for Committee)
- 13:30 – 14:30 Questions and Answers 1h00'
- 14:30 – 16:00 Writing Session (closed) 1h30'
- 16:00 – 17:00 Closeout 1h00'

http://beamdocs.fnal.gov/AD-public/DocDB/ShowDocument?docid=3941

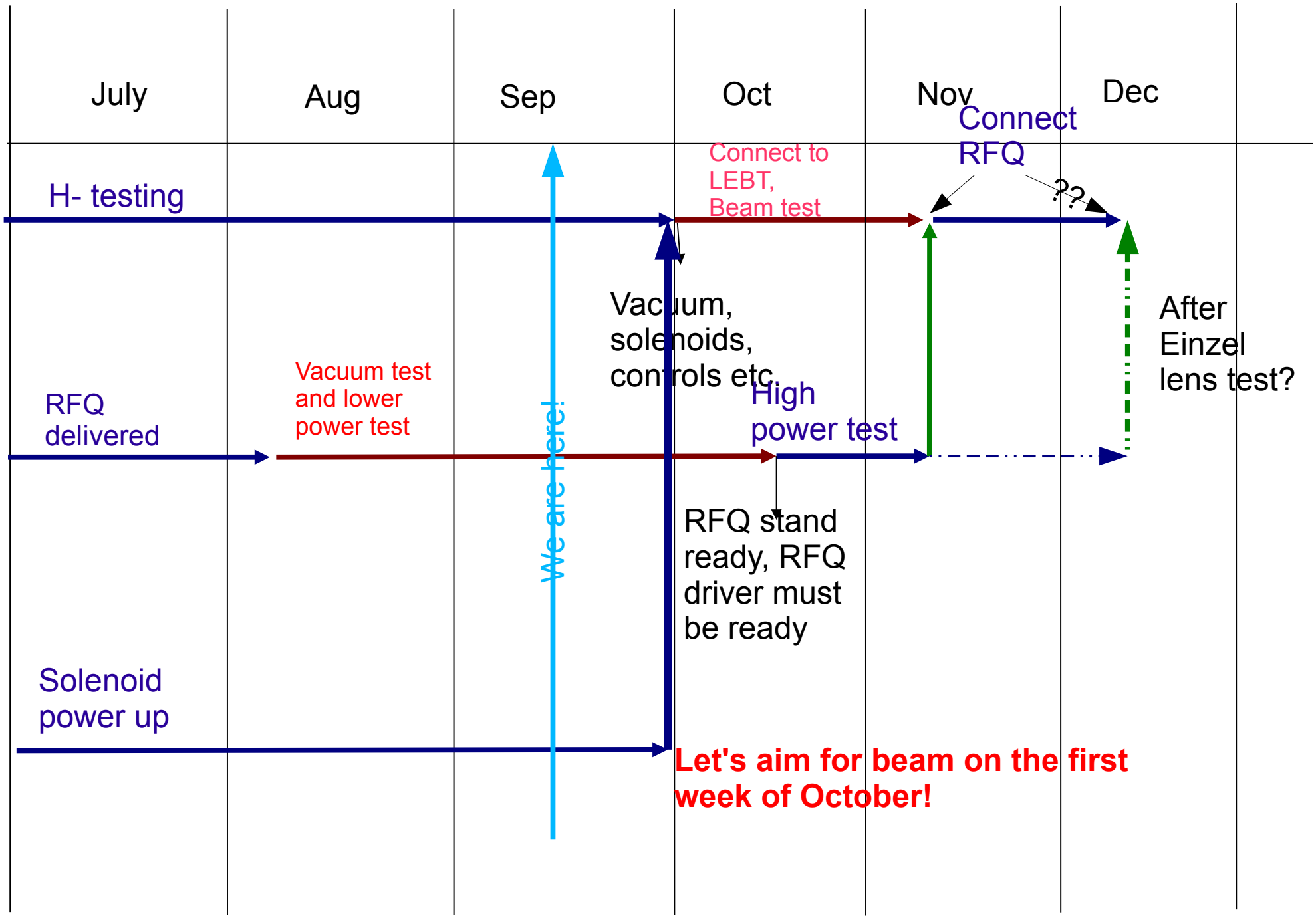
July
Aug
Sep
Oct
Nov
Dec
H- testing
Connect to LEBT, Beam test
Connect RFQ
??
RFQ delivered
Vacuum test and lower power test
We are here!
Vacuum, solenoids, controls etc.
High power test
After Einzel lens test?
RFQ stand ready, RFQ driver must be ready
Solenoid power up
Let's aim for beam on the first week of October!

REV	DESCRIPTION	DRAWN	DATE
		APPROVED	DATE

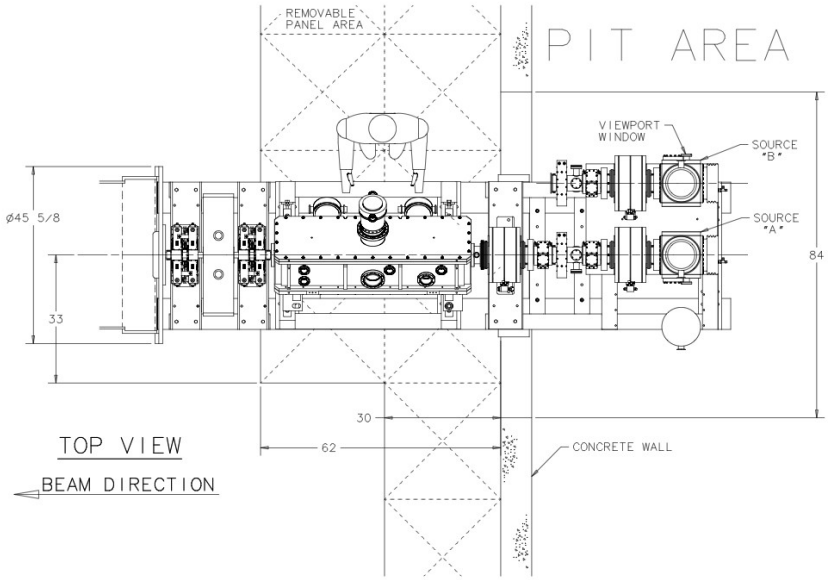

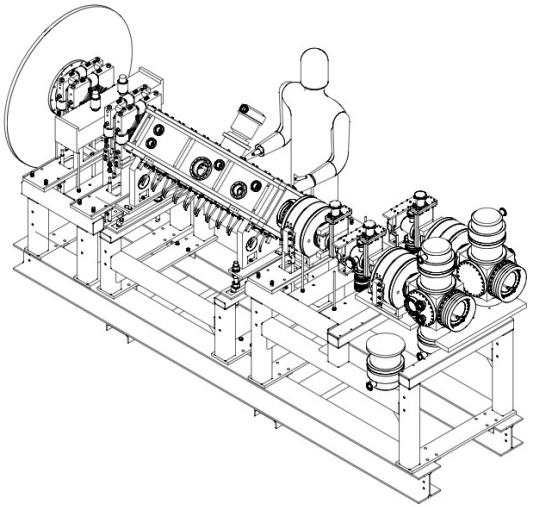

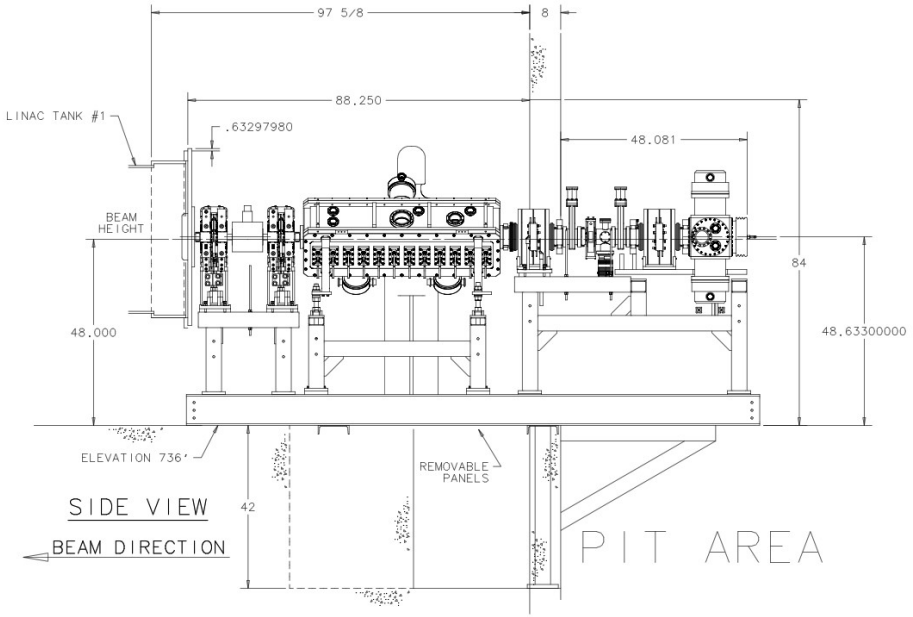

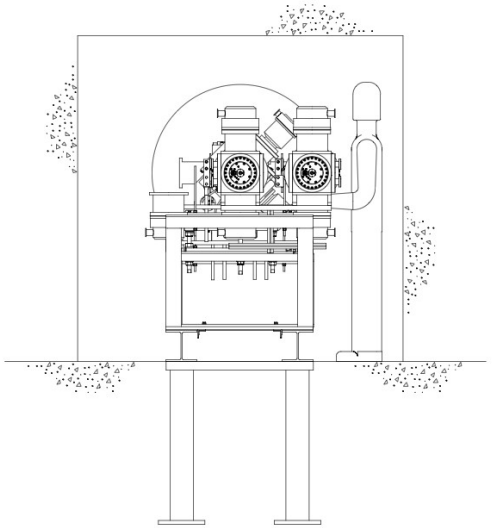

PREACCELERATOR PRELIMINARY LAYOUT

APRIL 27, 2011

UNLESS OTHERWISE SPECIFIED	ORIGINATOR	
± ± ±	DRAWN	
	CHECKED	
1. BREAK ALL SHARP EDGES MAX.	APPROVED	
2. DO NOT SCALE DRAWING. 3. DIMENSIONS BASED UPON ASME Y14.5M-1994 4. MAX. ALL MACH. SURFACES	USED ON	
5. DRAWING UNITS: U.S. INCH	MATERIAL	

FERMI NATIONAL ACCELERATOR LABORATORY
UNITED STATES DEPARTMENT OF ENERGY

SCALE	DRAWING NUMBER	SHEET	REV
	. — —	1 OF 1	

CREATED WITH : GROUP :

Created: 10:31:09 on 28-06-11 (D-M-Y) By: mkielar State: 1-INITIAL

Source Status

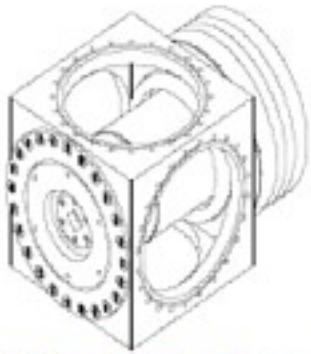

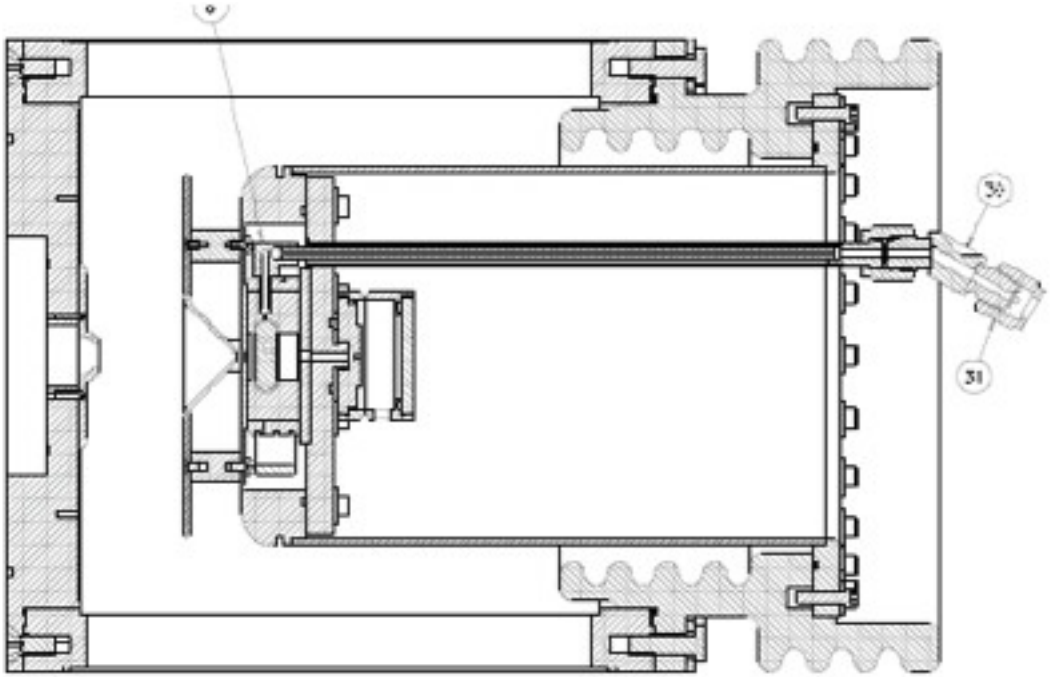

Device	Status	Comments
Modulator PS	To be installed	Need info on how to control
Valve pulser	being tested	
Arc modulator pulser	starting on it now	
extractor pulser		
	testing	

First results from new extractor pulser

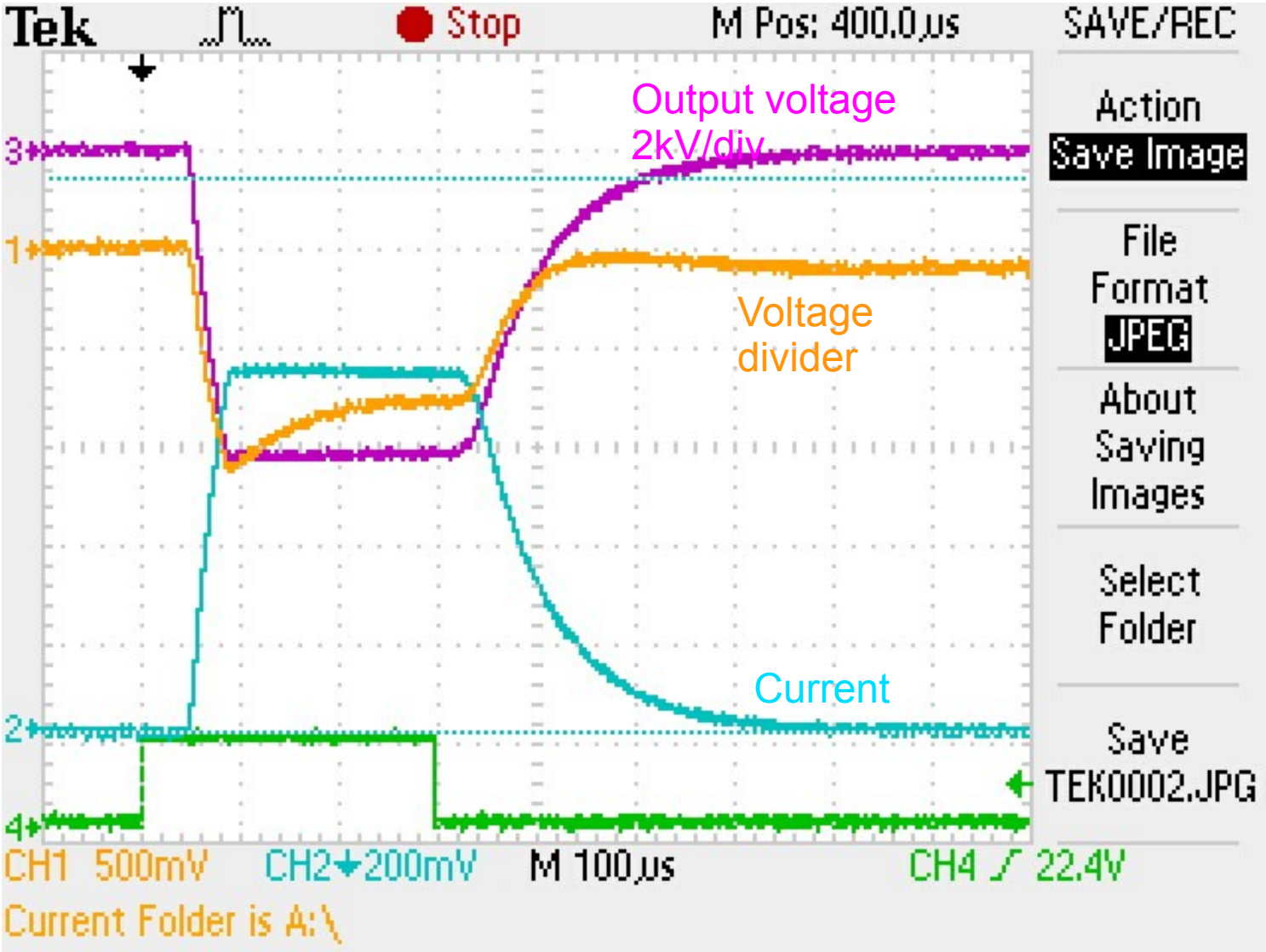

Small problem with voltage divider.

LEBT Status

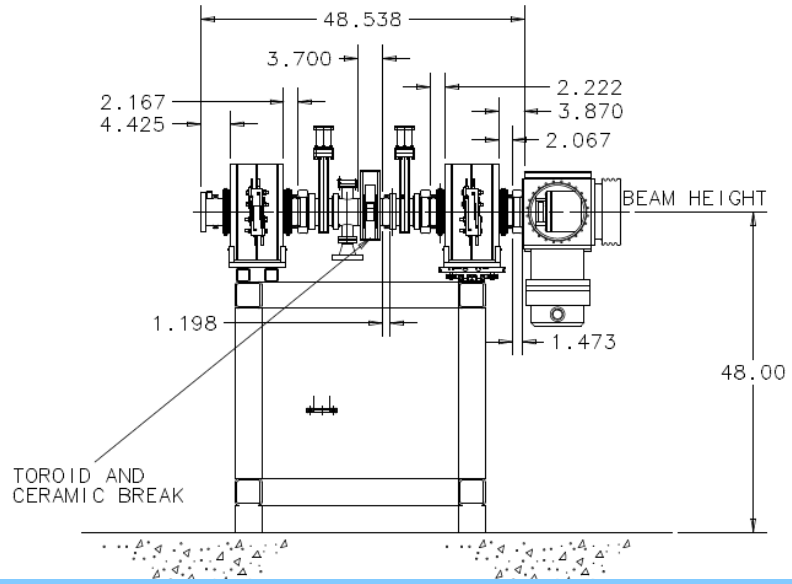

Klixons on solenoids!

Device	Status	Comments
Solenoid PS	Tests complete?	
Solenoids	Potted	Waiting for measurements
LEBT beampipe	Complete (22 Aug)	
Correctors		Should be delivered in mid Oct.
Solid state switches	Have PO	Expect to be delivered 1st week of November
LEBT stand	Nearly done	Slide, stand expected delivery 12 Sept. Small parts may be missing.
Solenoid #4	Potted	Waiting for measurements. Klixons need to be installed

RFQ Status

- Leak checked. 24 Aug 2011.
- Where's Waldo? Where's the TUNER???
  - Shipped from Germany 13 Sep.!!!!!

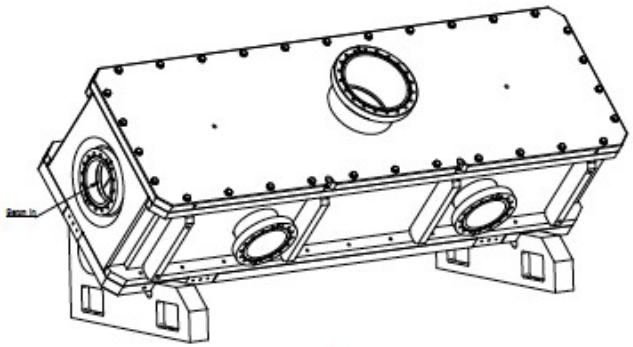

15

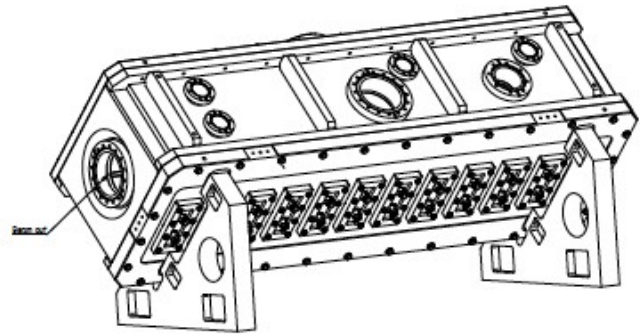

Device	Status	Comments
4816 PA	Cables being pulled	

MEBT Status

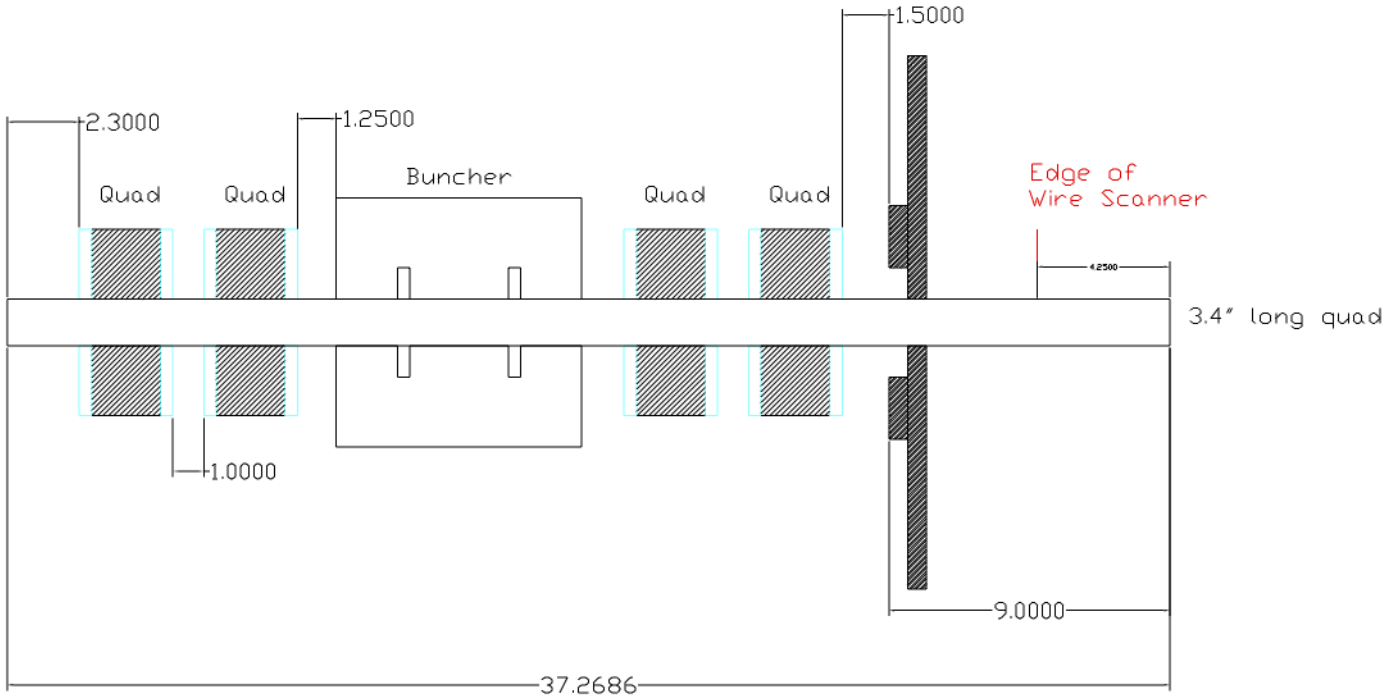

Device	Status	Comments
Quads	Cores delivered. 1st set of coils test fitted on 1 quad.	Expect 1st set of doublets end of Sept
Buncher	Measurements started 07 Aug. Should be complete with grids by 21 Sep.	Without grids test complete. Grids are inserted. Tuning block attached.
Power for quads	Specs to follow	Quads being redone.
Power for buncher		Use present buncher supply in the line.

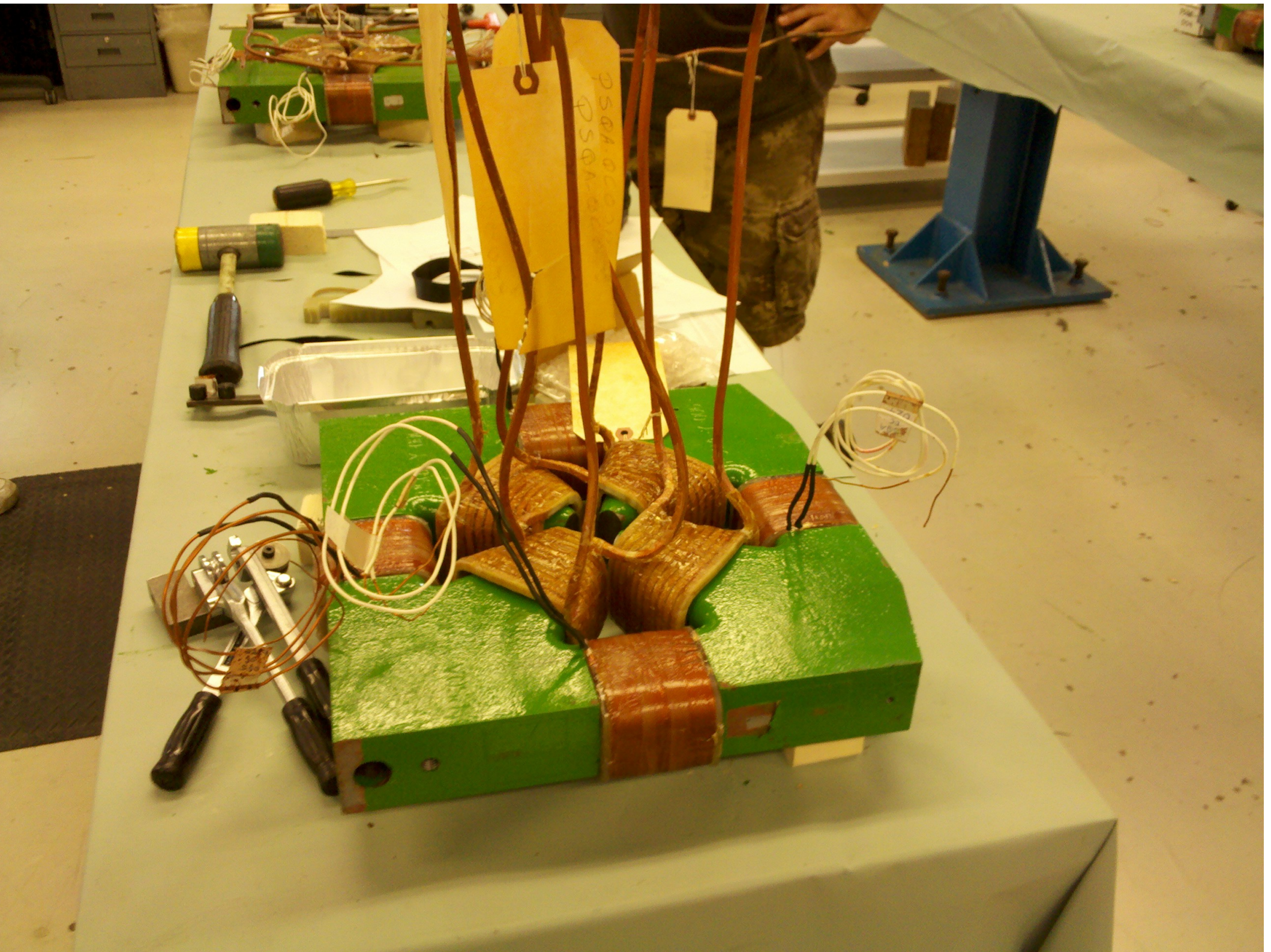

Buncher

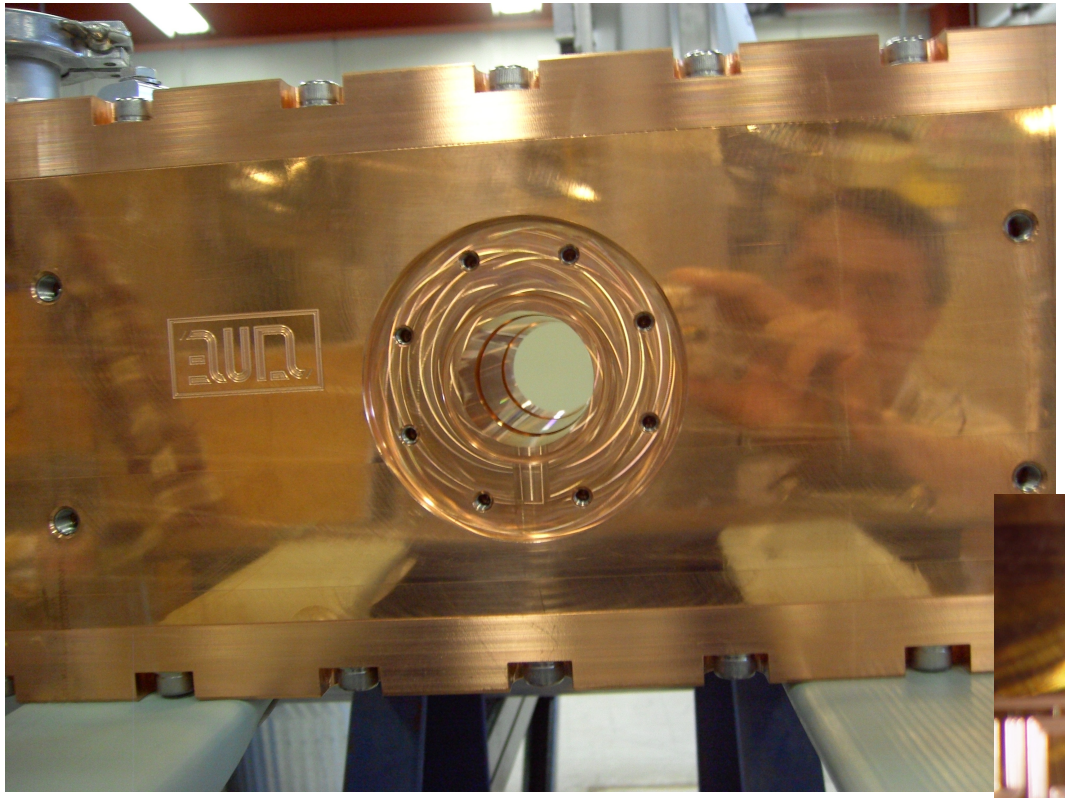

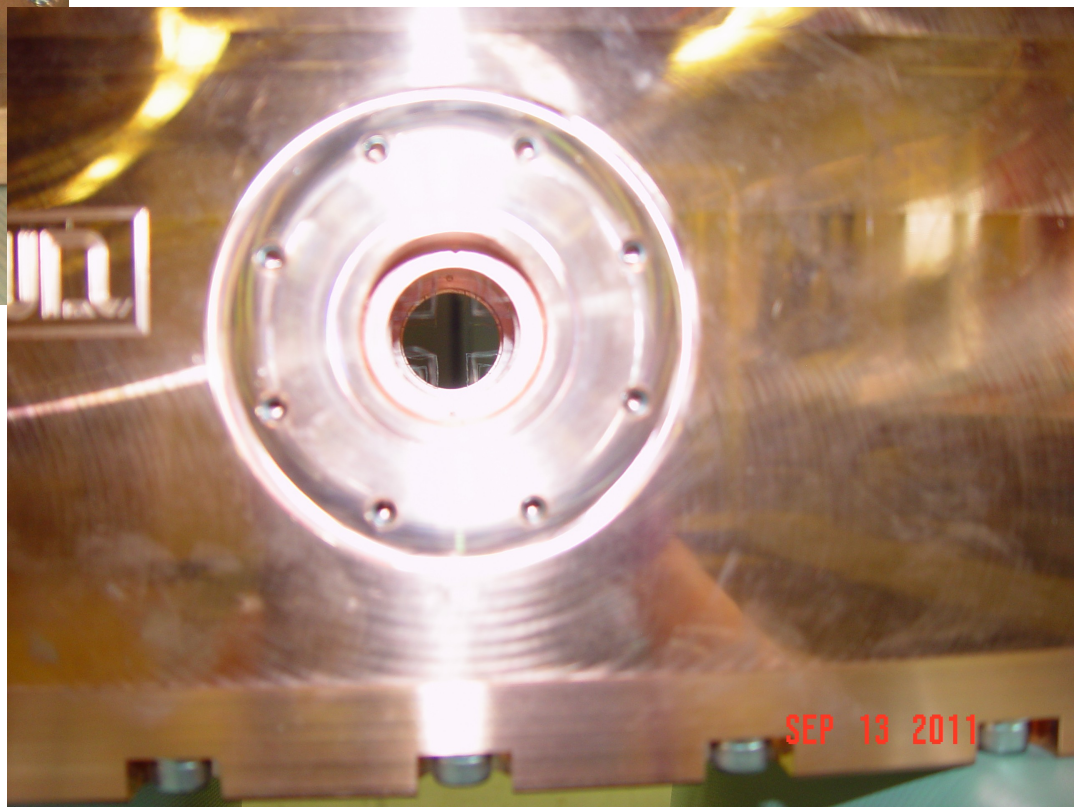

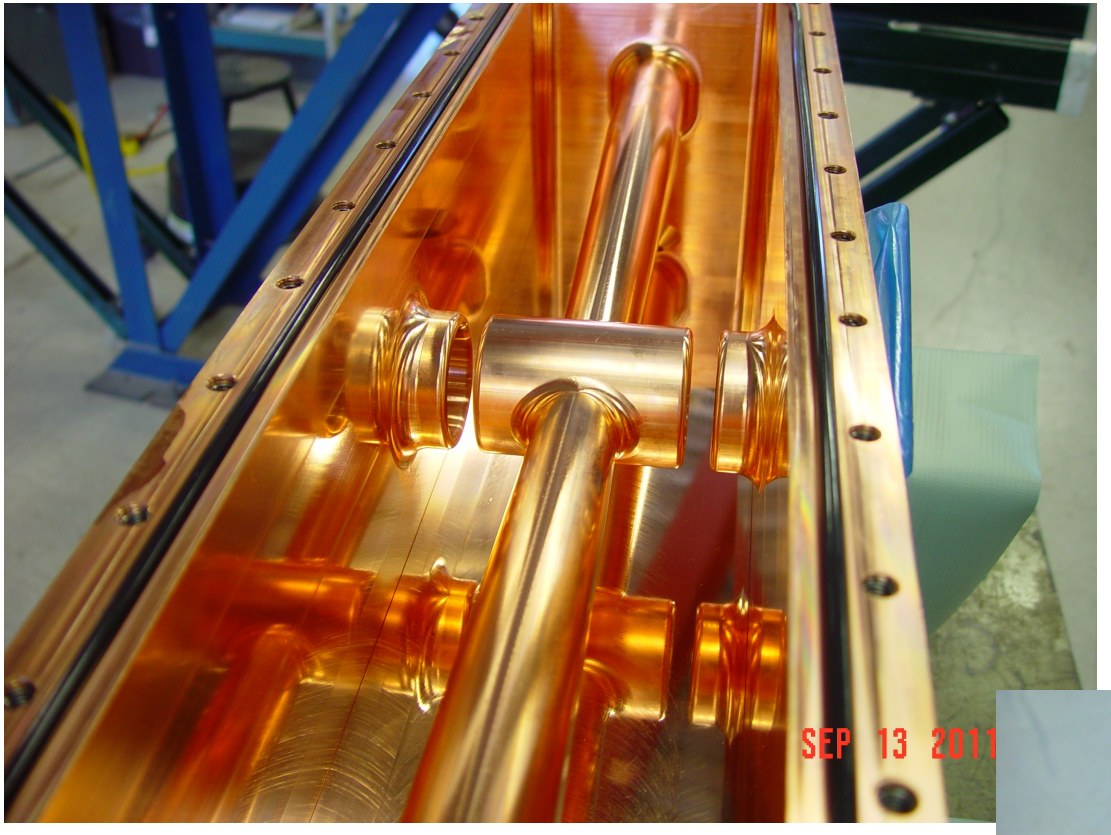
SEP 13 2011

SEP 13 2011

Proposed test area layout

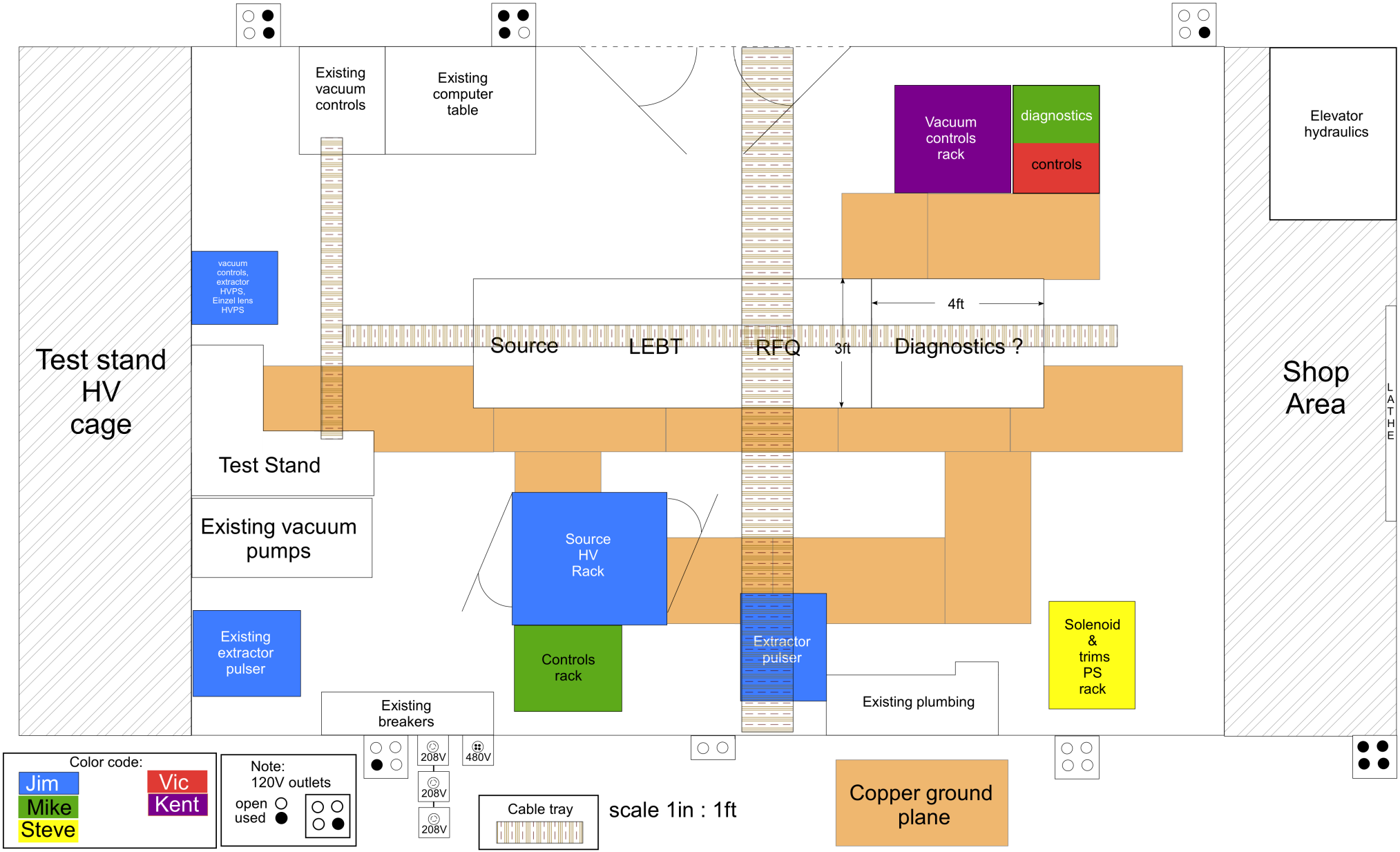

Test area, test stand and instrumentation

Device	Status	Comments
MW can	Complete! (10 Aug)	
MW electronics	Complete! (10 Aug)	
Instrumentation stand	Drawings being checked (24 Aug)	
emittance probes can	Drawings being checked (24 Aug)	
Toroid and dump	Complete! (24 Aug)	
Toroid stand.	Complete! (09 Sep)	
TOF	3 BPM shells	
Faraday Cup	Needs zero length adapter	

Controls

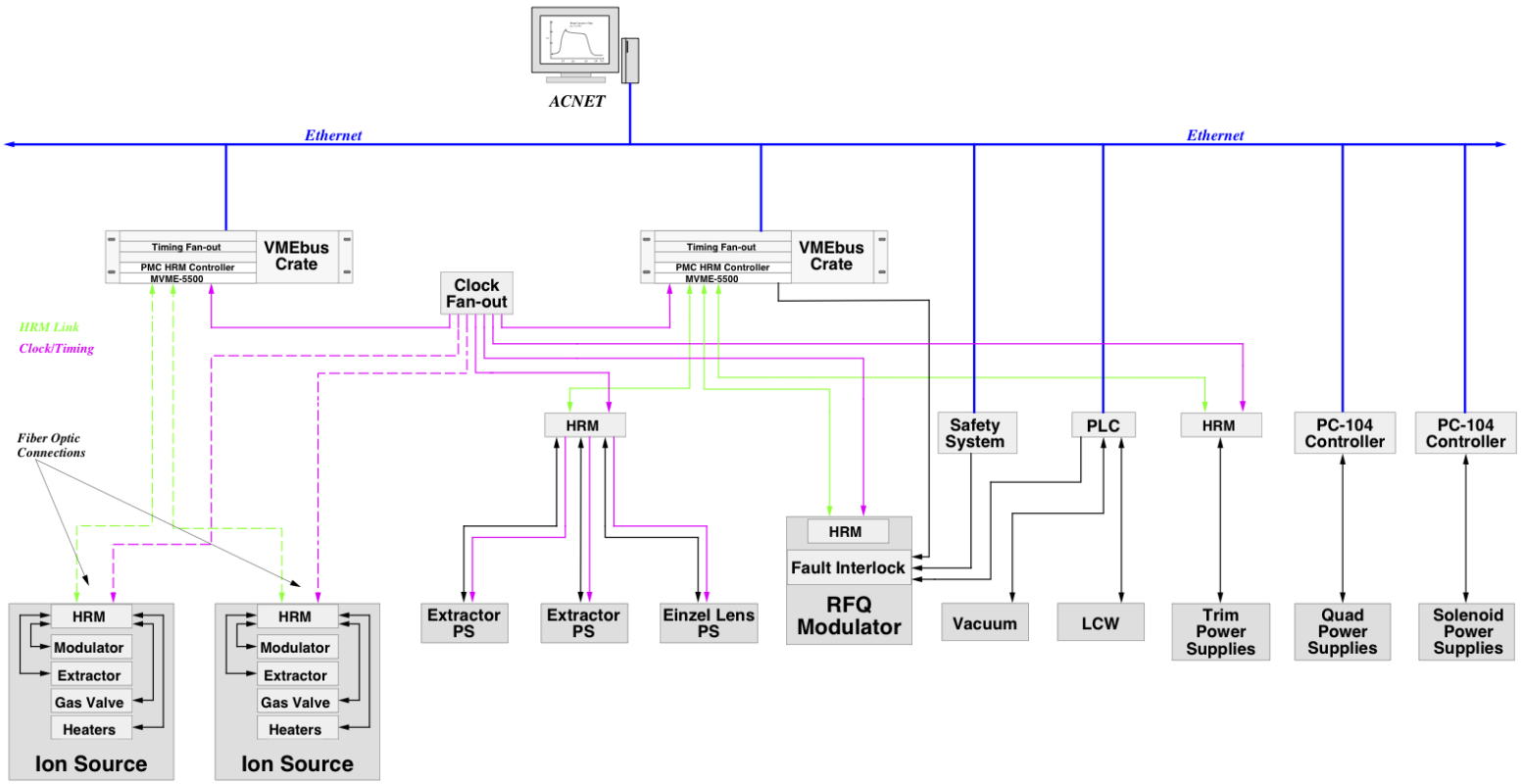

Linac RFQ Upgrade Controls Block Diagram

Safety