Low Level RF Control and Cavity Tuning Systems

Brian Chase

Outline

- Cavities and electrical model
- Driving a cavity with RF
- Controlling the cavity field vector
- Demonstration with simulator
- Resonance control (fast and slow)
- Building a LLRF system

RF cavities

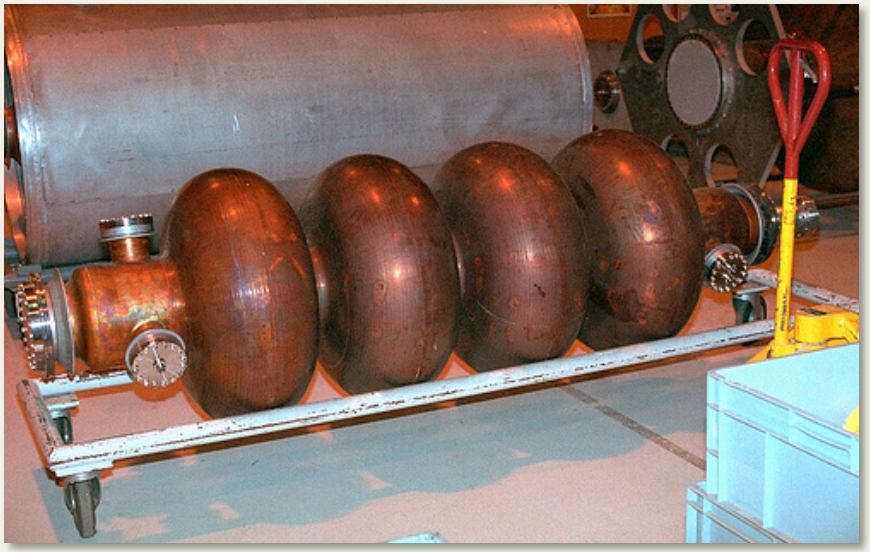

Copper cavities

Superconducting cavities

The standard RLC model

$$i_R + i_L + i_C = I \qquad (1)$$

$$i_R = \frac{V}{R}$$

$$\frac{di_L}{dt} = \frac{1}{L}V \qquad (2)$$

$$i_C = C\frac{dV}{dt}$$

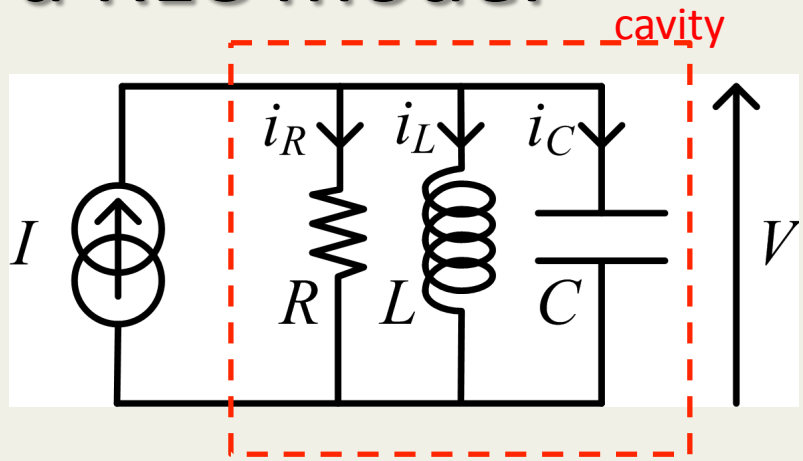

(1) ➔ $$\frac{di_R}{dt} + \frac{di_L}{dt} + \frac{di_C}{dt} = \frac{dI}{dt}$$

(1) & (2) ➔ $$\frac{1}{R}\frac{dV}{dt} + \frac{1}{L}V + C\frac{d^2V}{dt^2} = \frac{dI}{dt}$$

➔ $$\frac{d^2V}{dt^2} + \frac{1}{RC}\times\frac{dV}{dt} + \frac{1}{LC}\times V = \frac{1}{C}\times\frac{dI}{dt}$$

→ 2nd order lin. diff. eq. has a solution in the form of

$$V(t) = V_{cav}(t)\sin(\omega_{RF}\times t)$$

Envelope equation

$$V(t) = V_{cav}(t)\sin(\omega_{RF} \times t)$$

$$V_{cav}(t) = V_{gen}(1 - e^{-\frac{t}{\tau}})$$

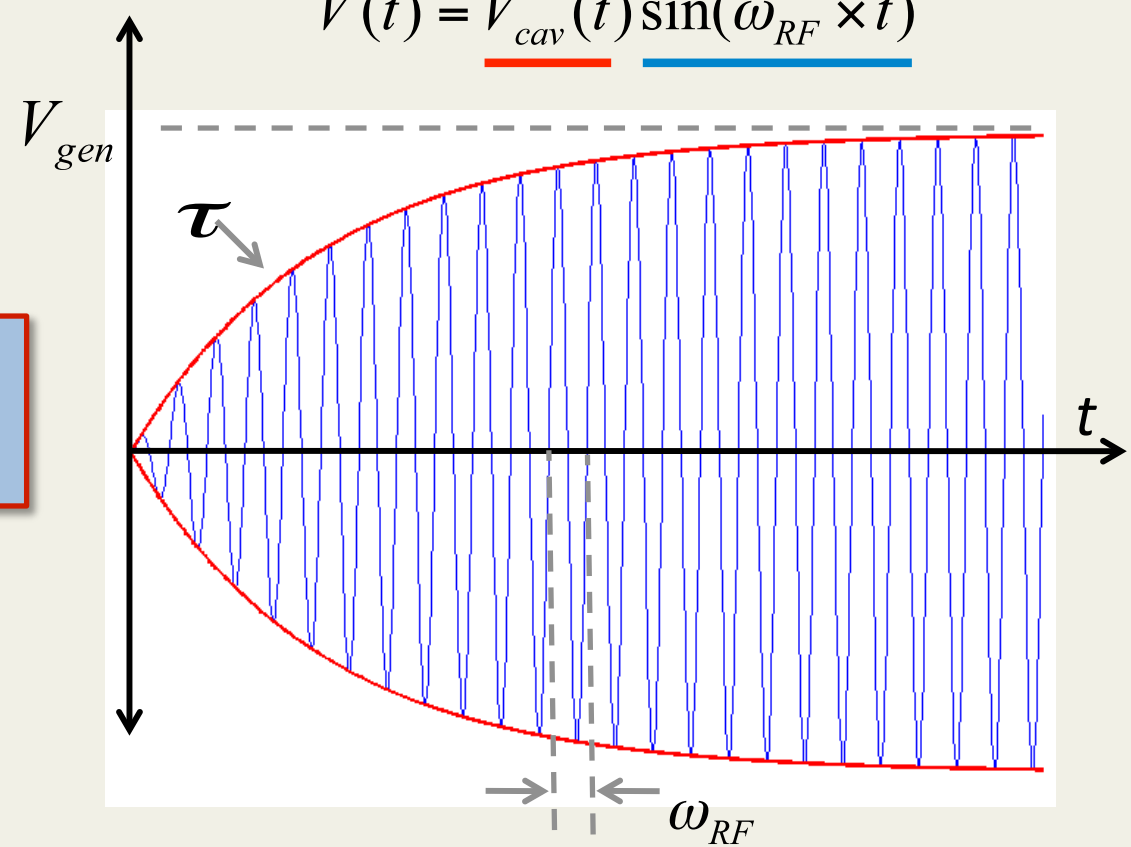

LLRF works in the modulation domain of the RF waveform

Figures of merit

Quality factor Q_0 :

$$Q_0 \equiv \frac{\text{Energy stored in cavity}}{\text{Energy dissipated in cavity walls per radian}} = \frac{\omega_0 U}{P_{diss}}$$

Shunt impedance R_{sh} :

$$R_{sh} \equiv \frac{V_c^2}{P_{diss}} \quad \text{in } \Omega$$

V_c = cavity "accelerating" voltage

Intrinsic impedance R_{sh}/Q_0 :

$$\frac{R_{sh}}{Q_0} \quad \text{in } \Omega$$

Defined by cavity geometry (X_L, X_C)

Coupling power to a cavity

- Input coupler
  - A coaxial cable carries power from an RF source to the cavity
  - The strength of the input coupling is adjusted by changing the penetration of the center conductor
- Output coupler
  - the transmitted probe (fixed coupler) picks up power transmitted through the cavity

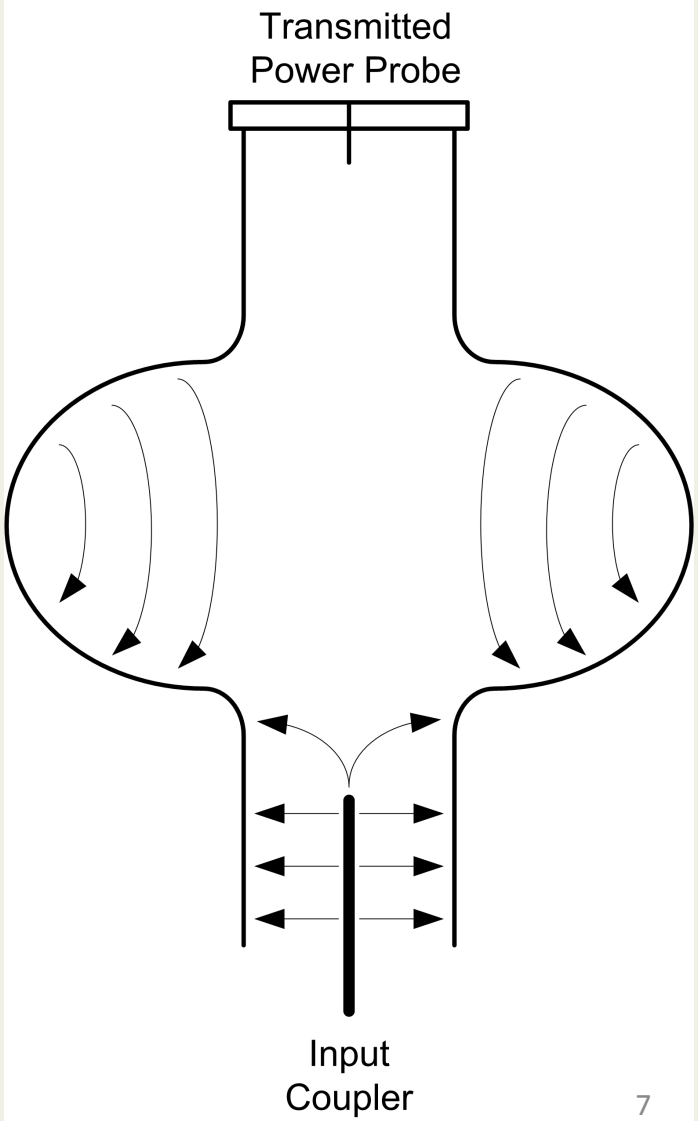

Coupling power to a cavity

Recall $$Q_0 \equiv \frac{\omega_0 U}{P_{diss}}$$

Similarly, define a "loaded" quality factor Q_L:

$$\boxed{Q_L \equiv \frac{\omega_0 U}{P_{tot}}}$$

Total power being lost : $$P_{tot} = P_{diss} + P_e + P_t \approx P_{diss} + P_e$$

P_e is the power leaking back out the input coupler. P_t is the power coming out the transmitted power coupler. Typically P_t is very small $\Rightarrow P_{tot} \approx P_{diss} + P_e$

Define a coupling coefficient β :

$$\boxed{Q_L = \frac{Q_0}{1+\beta}}$$

The energy in the cavity decays exponentially with time constant:

$$\boxed{\tau = \frac{Q_L}{2\omega_0}}$$

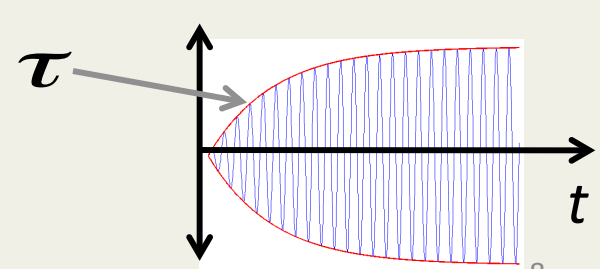

The cavity transfer function
in Laplace domain

"R over Q"

$$H_{cav}(s) = \frac{\left(\frac{1}{2}\frac{R_{sh}}{Q_0}\omega_0\right)s}{s^2 + \frac{\omega_0}{Q_L}s + \omega_0^2}$$

A bandpass response centered at ω_0

cavity resonance frequency

cavity coupling → loaded Q

Control of a cavity

→ Use the classic "plant-controller" approach

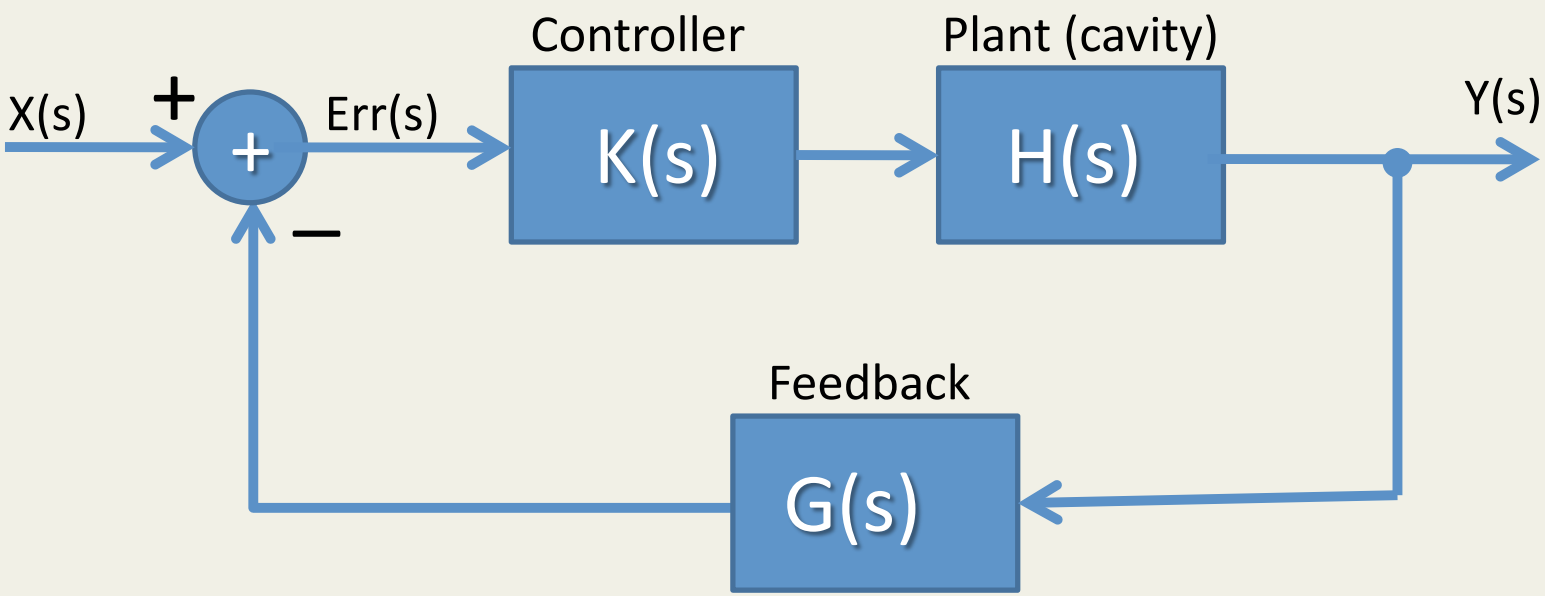

Solve close loop transfer function

$$\frac{Y(s)}{X(s)} = \frac{H(s)K(s)}{1 + H(s)K(s)G(s)}$$

Examples of a cavity and controller

- Demo ONECAV Simulator
  - Notion of set point - SP
  - Notion of feed forward - FF
  - with proportional gain - K_p
  - Impact of gain on stability
  - Limits of proportional gain
  - Use of integral gain - K_i

Natural Cavity Response

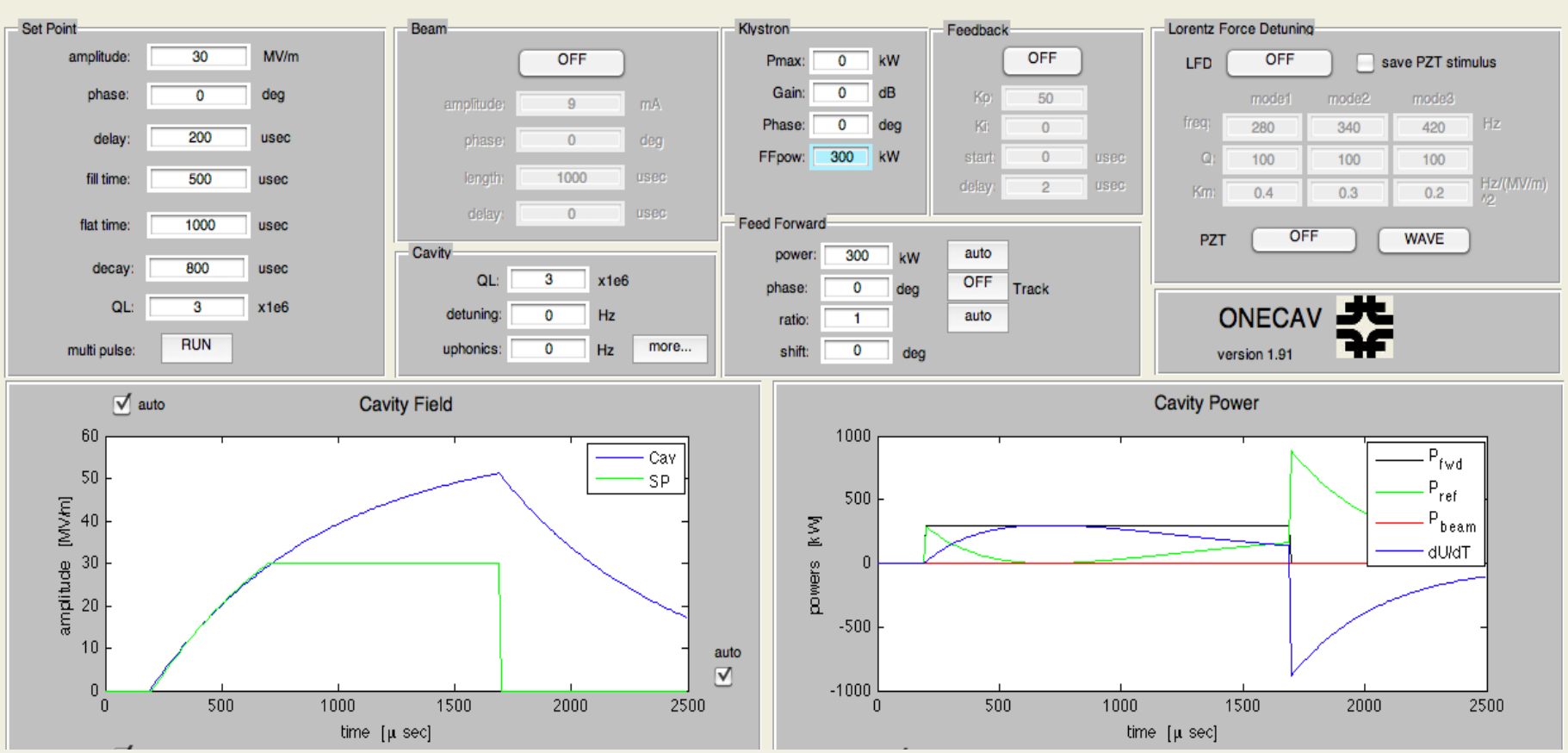

Cavity response follows Setpoint during fill
Cavity continues on with a low pass response

Adding a feedback gain of 10

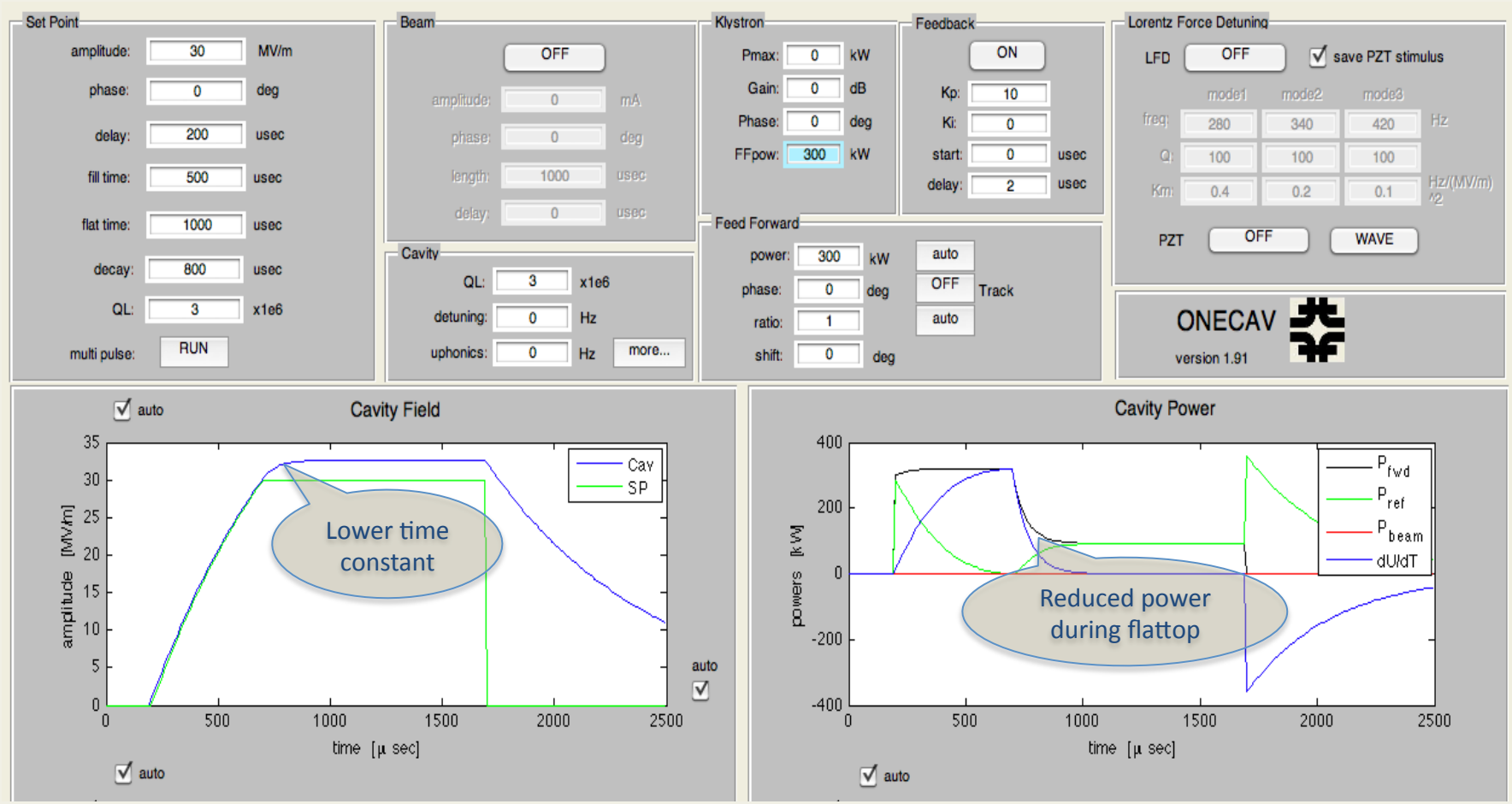

Feedforward set for flattop

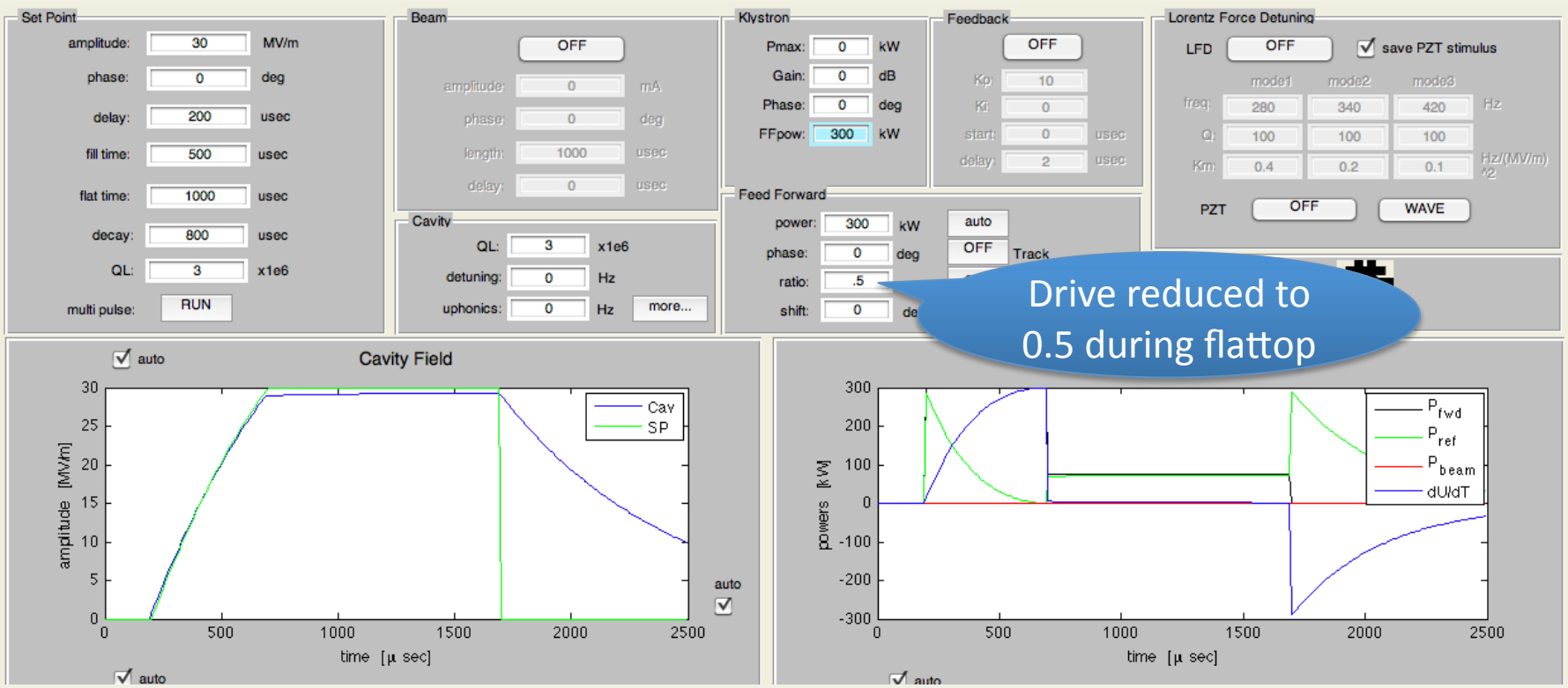

Feedforward allows for:

-The reduction of repeatable errors

-Operation without feedback for system tests

Adding Integral gain, no FF

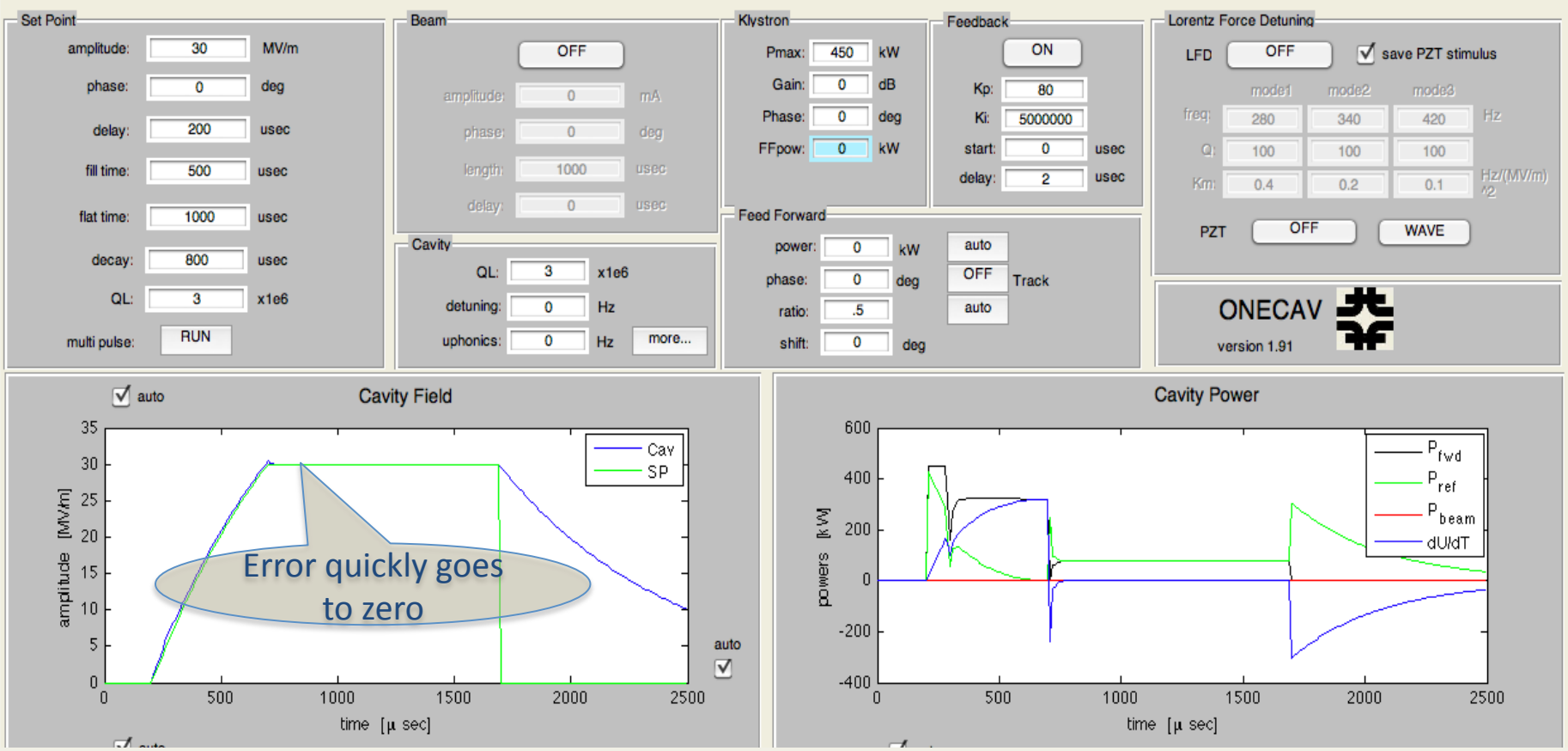

Kp= 80, Ki = 5E6

Closed loop performance

Pg = 200
Ig = 5E6
P2P error = .03 %
P2P phase = 0.02deg

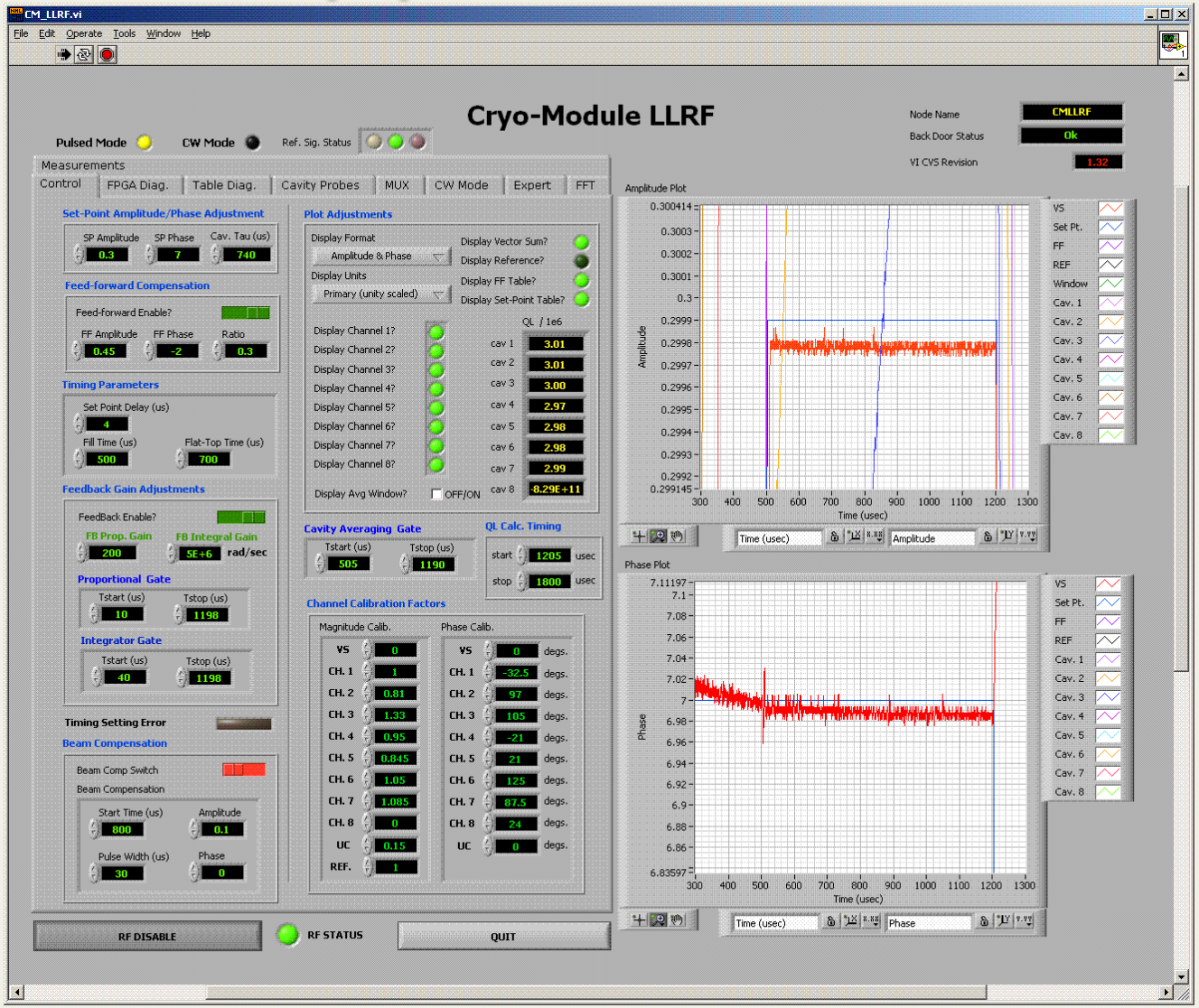

Fermilab

Closed loop Spectrum

Noise floor is about -150dBFS/Hz

Closed loop operation was demonstrated with Pg = 700 Ig = 7E6

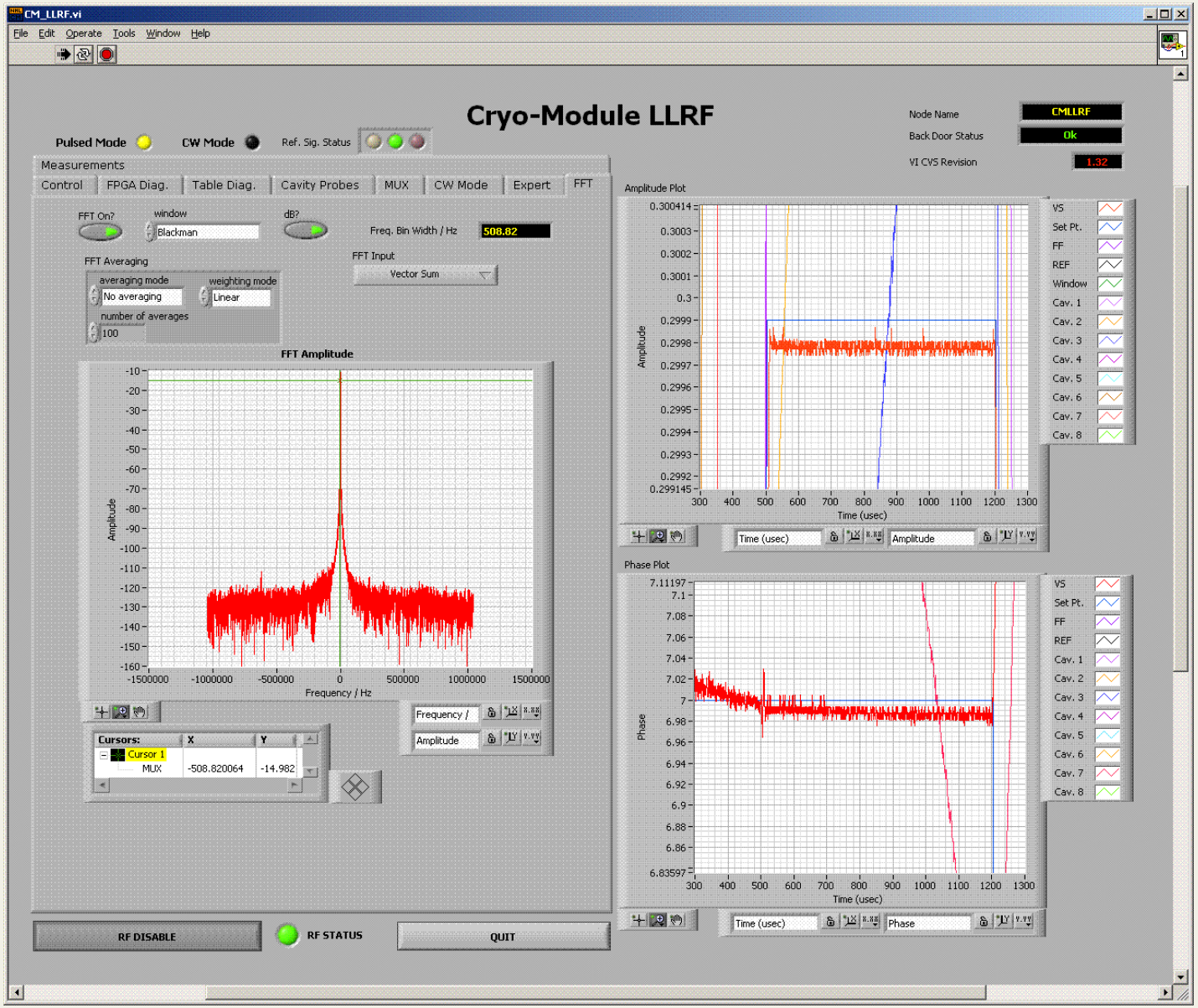

Fermilab

Beam loading

Beam in the cavity is represented by a current source applied at $t = t_0$

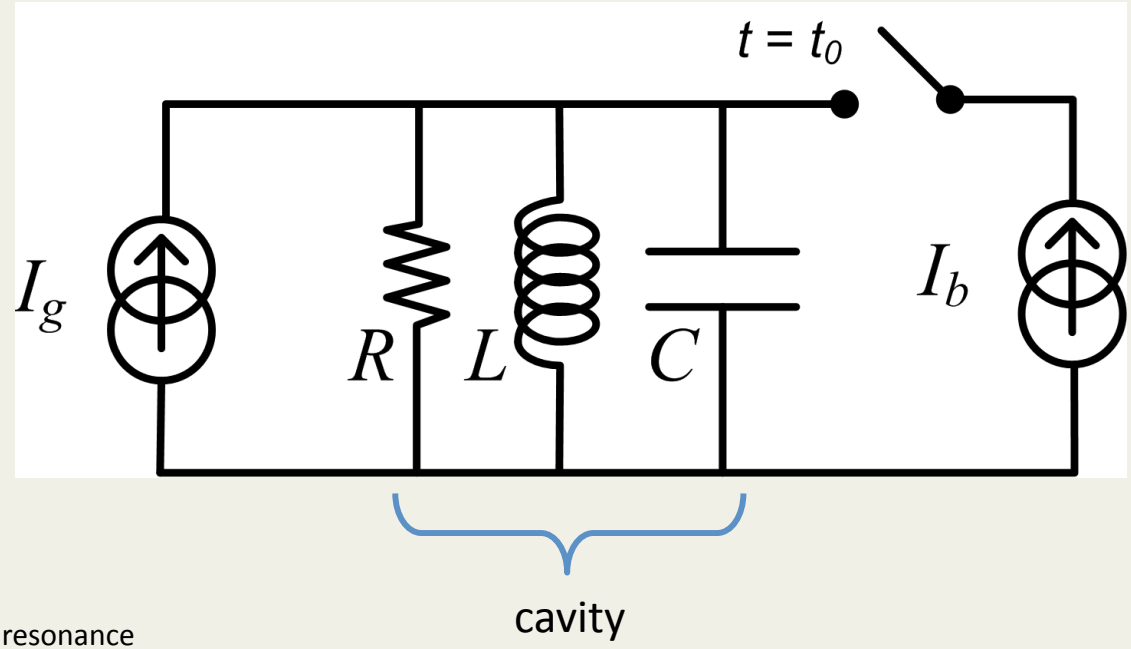

Cavity on resonance

$$V_{cav}(t) = R_L I_g (1 - e^{-\frac{t}{\tau}}) - R_L I_b (1 - e^{-\frac{t - t_0}{\tau}})$$

generator contribution

beam loading

$$R_L = \frac{R_{sh}}{1 + \beta}$$

Phasor diagram

Vector → complex notation
(amplitude and phase)

$$I_{cav} = I_g + I_b$$

The phase reference may be cavity voltage, beam phase or reference line

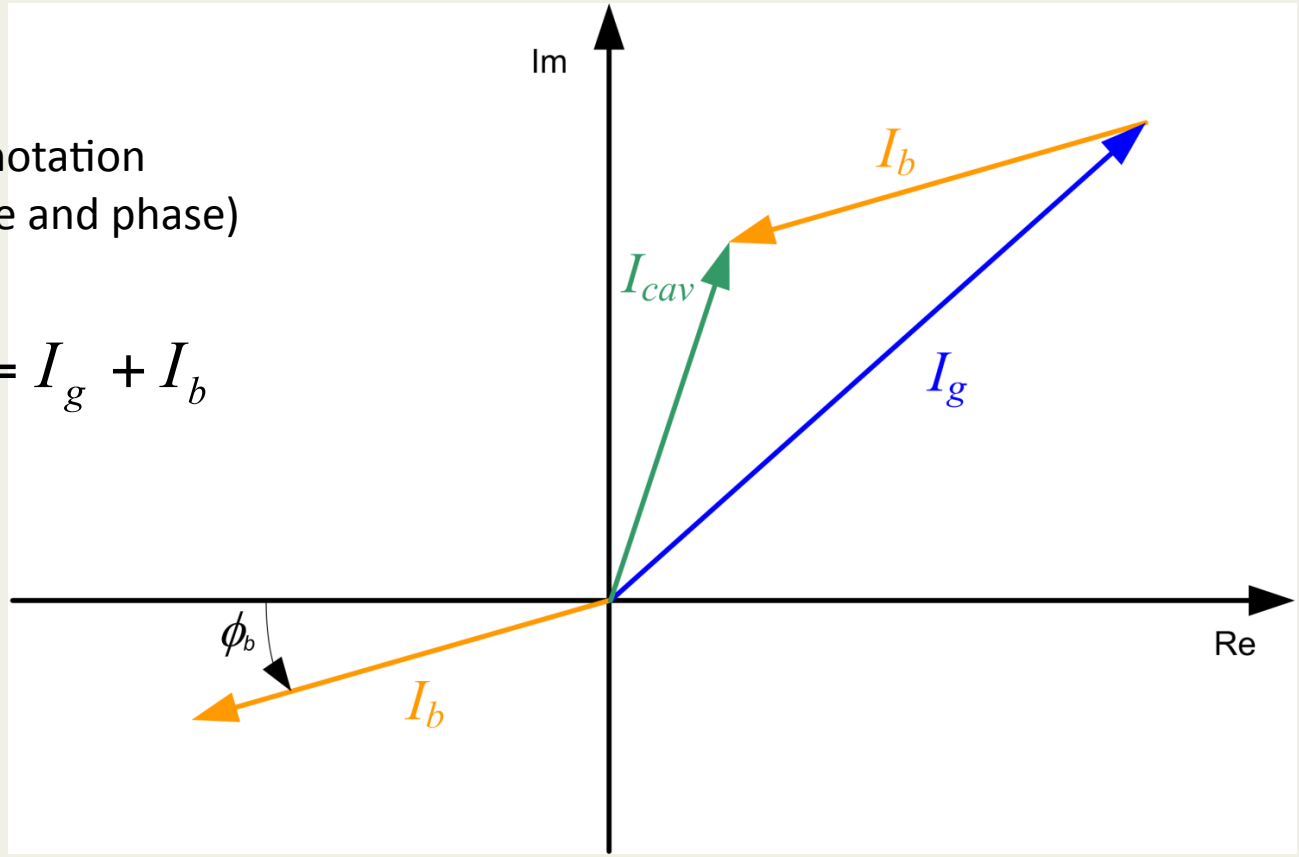

Instantaneous picture → phases and amplitudes are a function of time (phasor rotation)

Driving a Cavity + Beam

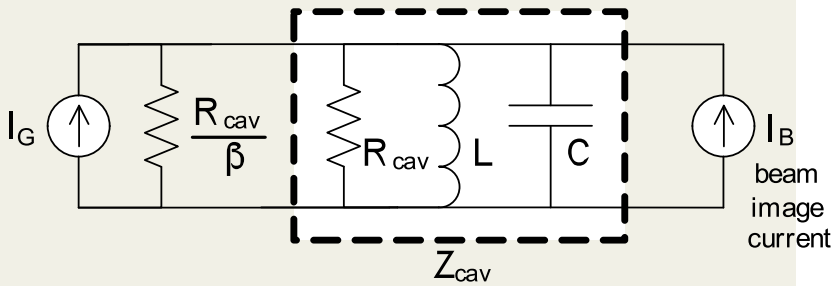

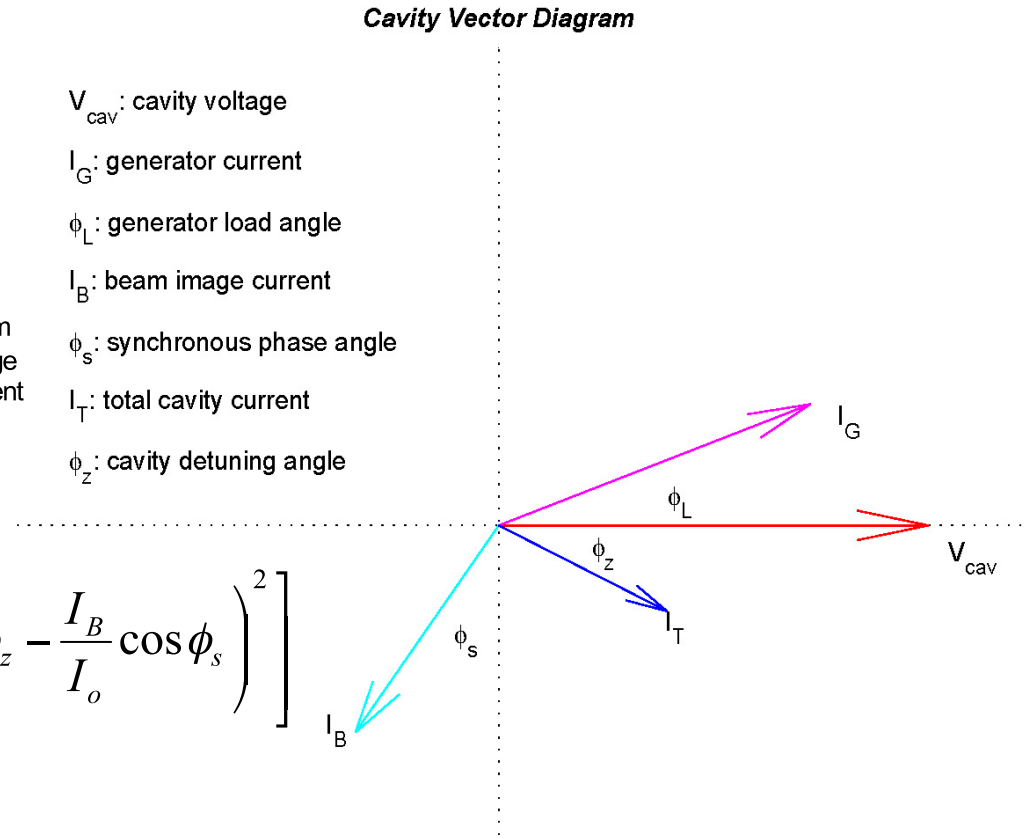

Required Forward Power:

$$P_g^+ = P_{cav}\frac{(\beta+1)^2}{4\beta}\left[\left(1+\frac{I_B}{I_o}\sin\phi_s\right)^2+\left(\tan\phi_z-\frac{I_B}{I_o}\cos\phi_s\right)^2\right]$$

Forward Power is minimized when:

$$\boxed{\beta_{opt} = 1 + \frac{P_B}{P_{cav}}}$$

$$\boxed{\tan\phi_{z\,opt} = \frac{I_B}{I_o}\cos\phi_s = \frac{\beta_{opt}-1}{\beta_{opt}+1}\cot\phi_s}$$

Notation for a Synchrotron, with the synchronous phase angle referenced to the RF zero crossing

Microphonics

Cavity unloaded bandwidth $\Delta f_0 = \frac{f_0}{Q_0}$

Static detuning, optimized for no reflected power $\delta f_0 = -\frac{f_0}{2}\left(\frac{R}{Q}\right)\frac{I_b}{V_{\mathrm{cav}}}\sin\Phi_b$

Optimal coupling coefficient for minimal Pfwd* $\beta_0 = \sqrt{(b+1)^2 + (2\frac{\delta f + \delta f_0}{\Delta f_0} + b\tan\Phi_b)^2}$

where $b = \frac{P_{\mathrm{beam}}}{P_{\mathrm{diss}}}$

Optimal coupling $Q_{L_0} = \frac{Q_0}{1+\beta_0}$

Minimal Pfwd $P_{\mathrm{gen}} = \frac{V_{\mathrm{cav}}^2}{R_{\mathrm{sh}}}\frac{1}{4\beta_0}\left[(1+b+\beta_0)^2 + (2\frac{\delta f + \delta f_0}{\Delta f_0} + b\tan\Phi_b)^2\right]$

(assuming optimal coupling)

* Merminga, Delayen, "On the optimization of Qext under heavy beam loading and in the presence of microphonics", CEBAF TN-96-022, 1996

Power dependence on microphonics

f_0 = 650 MHz

R/Q = 638

$Q_0 = 12.70 \times 10^9$

Vcav = 19.9 MV

Plot shows the power required as a function of microphonic detuning for different values of Q_L

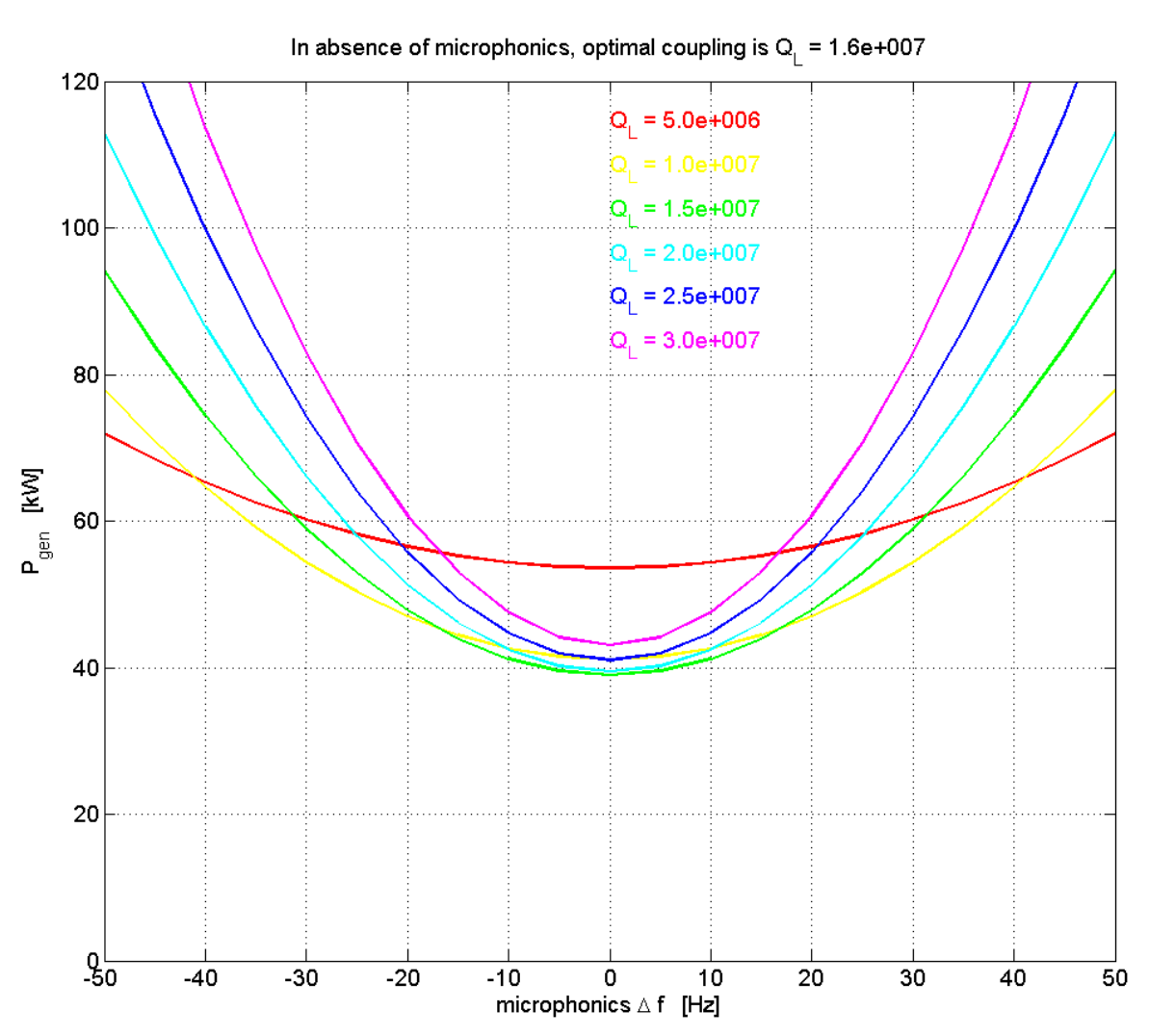

Example of a simulation with beam

- Demo ONECAV with beam on
- FF only, increase beam current
  → observe beam loading
- Change beam phase
  → observe phase loading
- FB on
  → observe Pfwd
- Beam loading compensation

Adding Beam Current 9mA

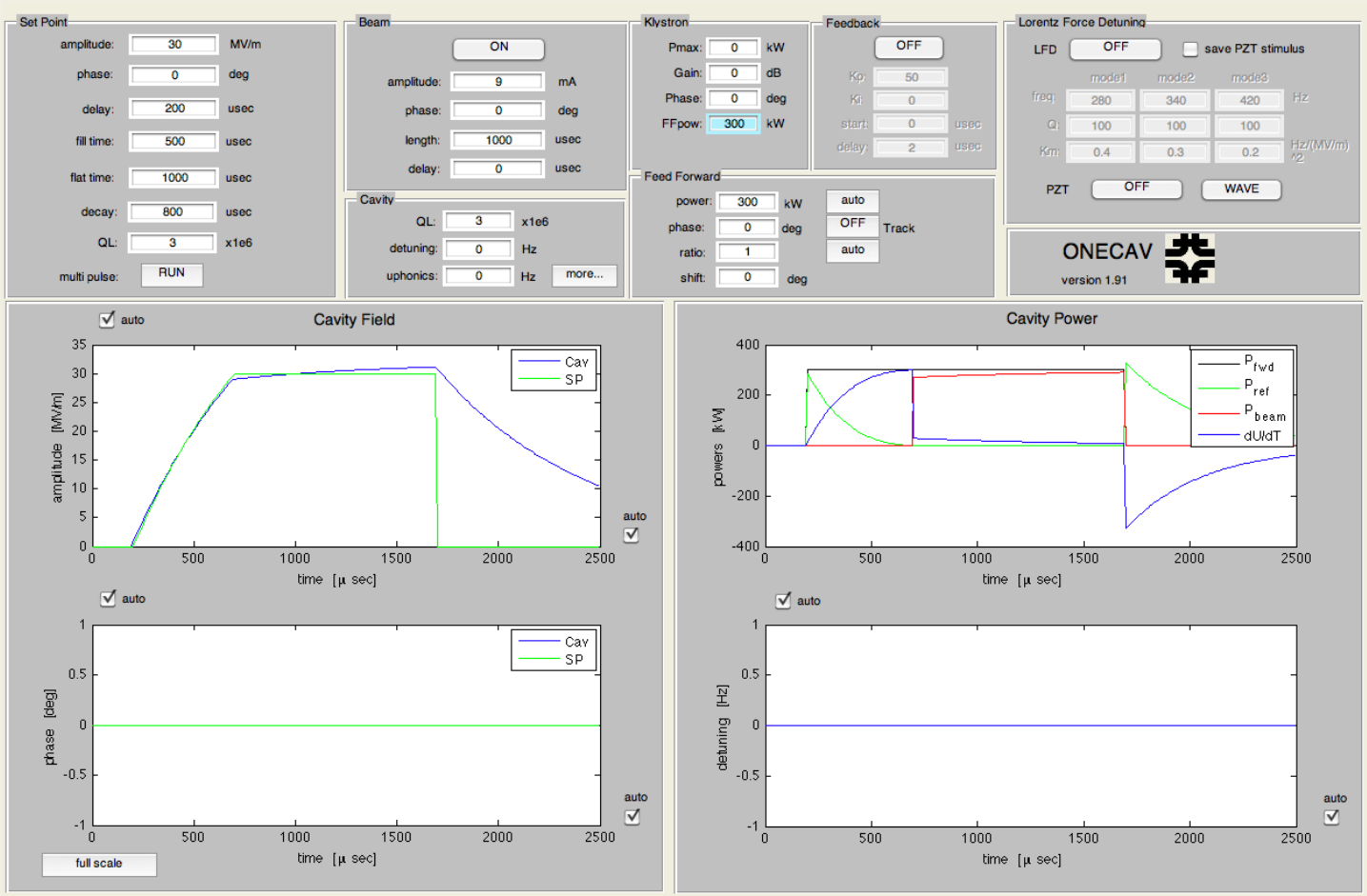

No FB, Excess Beam Current

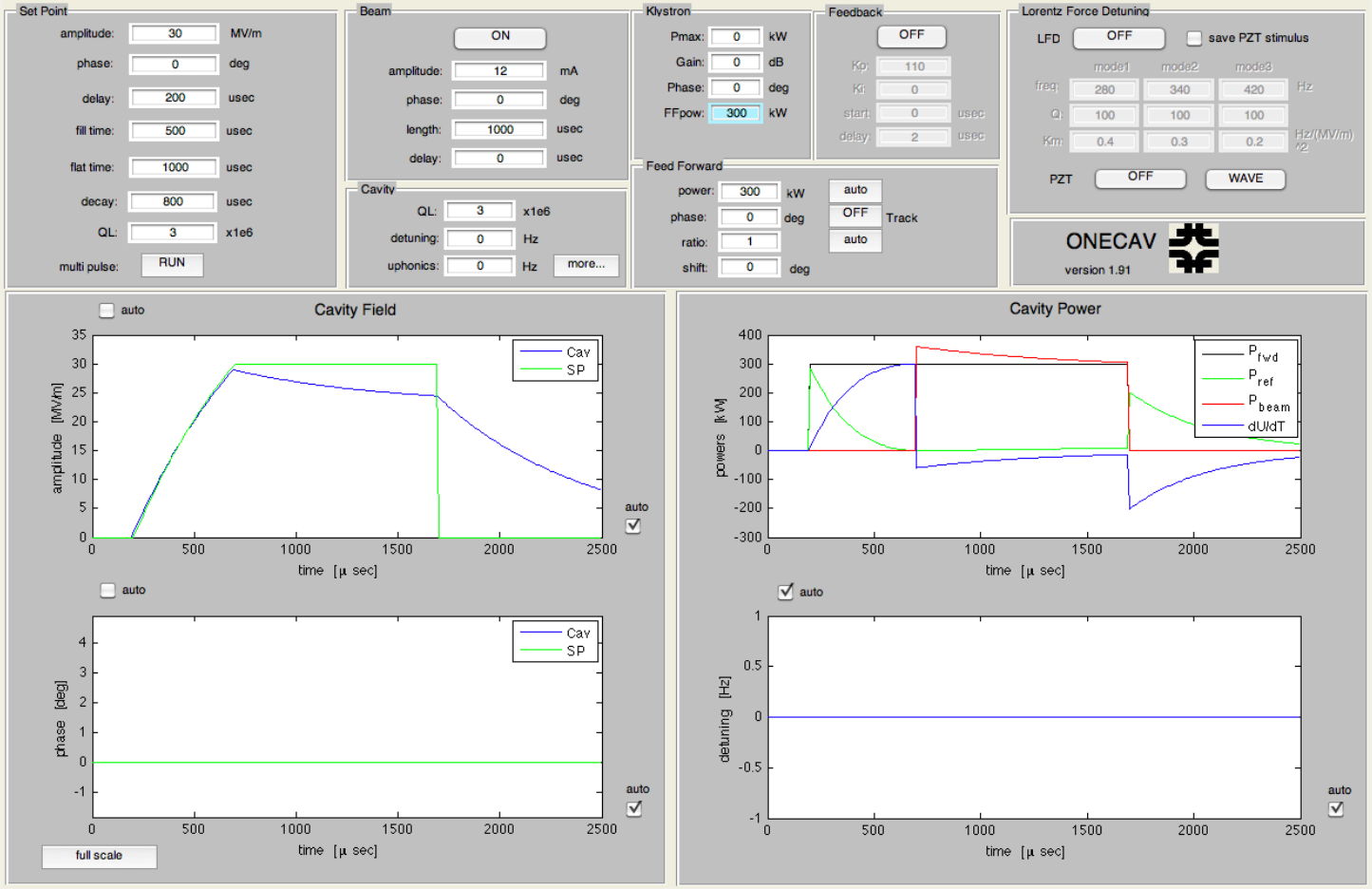

Beam current & tuning errors

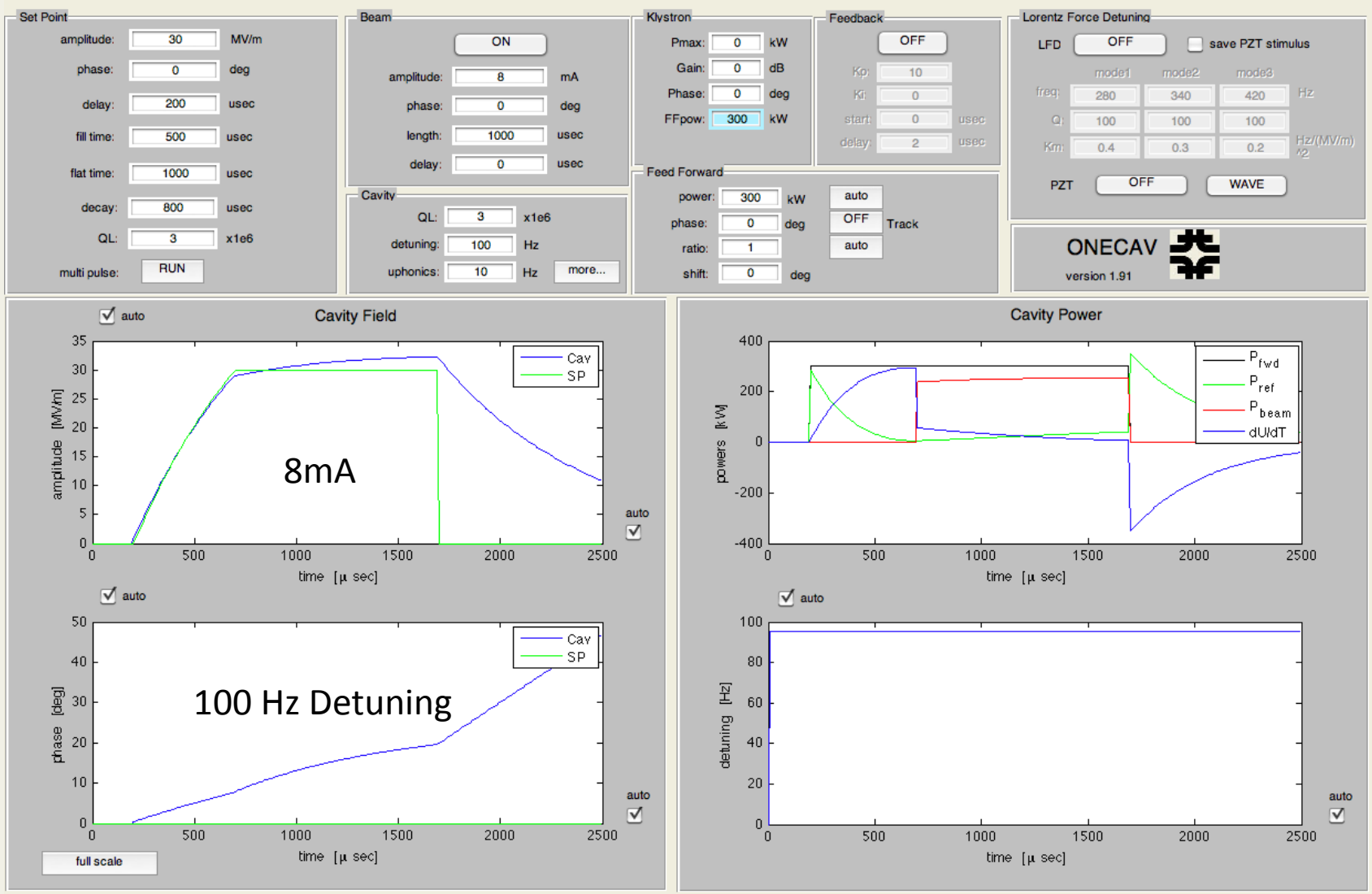

Errors Reduced by Feedback

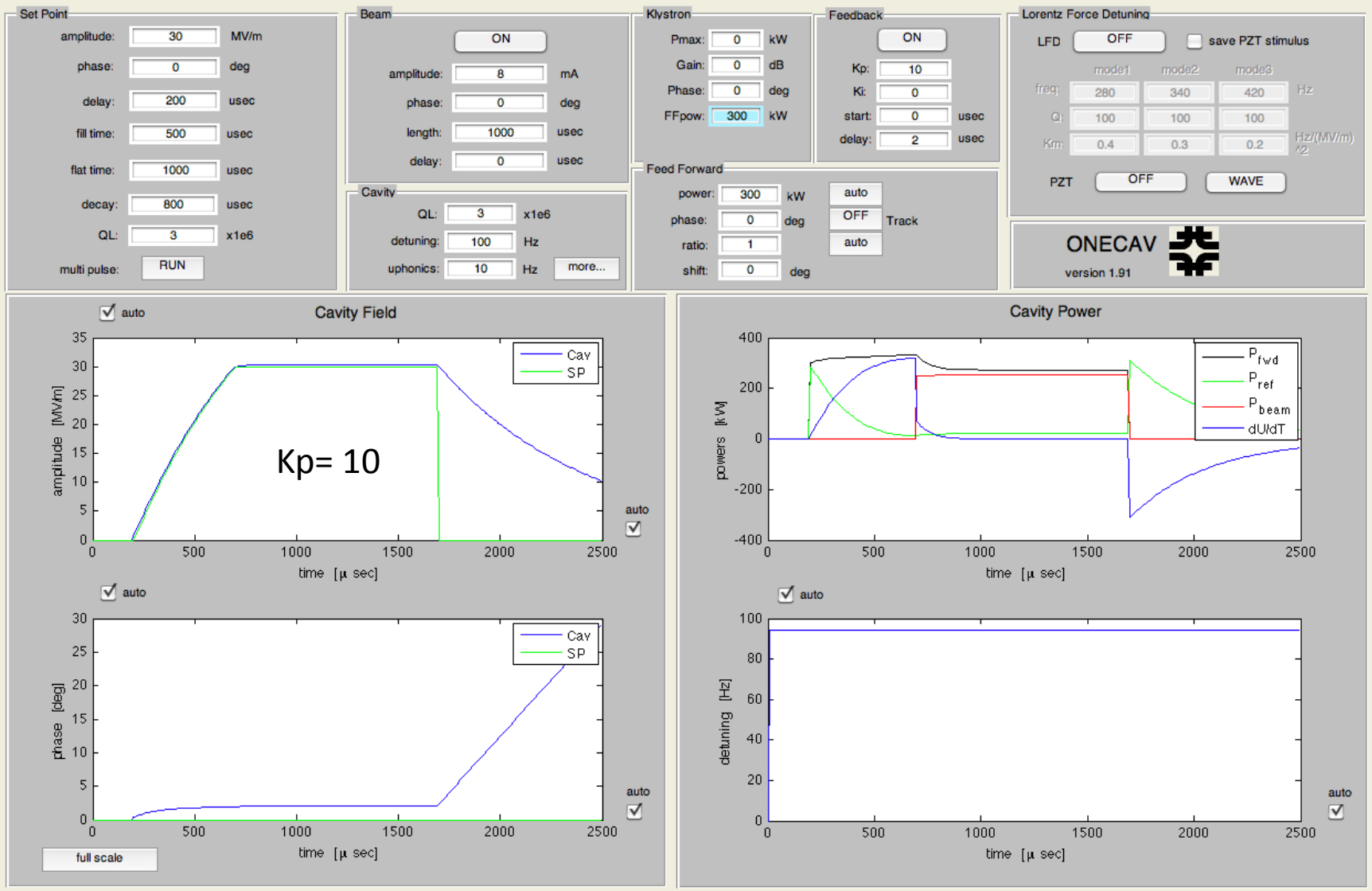

Adding Integral Gain

Gains are set low so that errors are visible

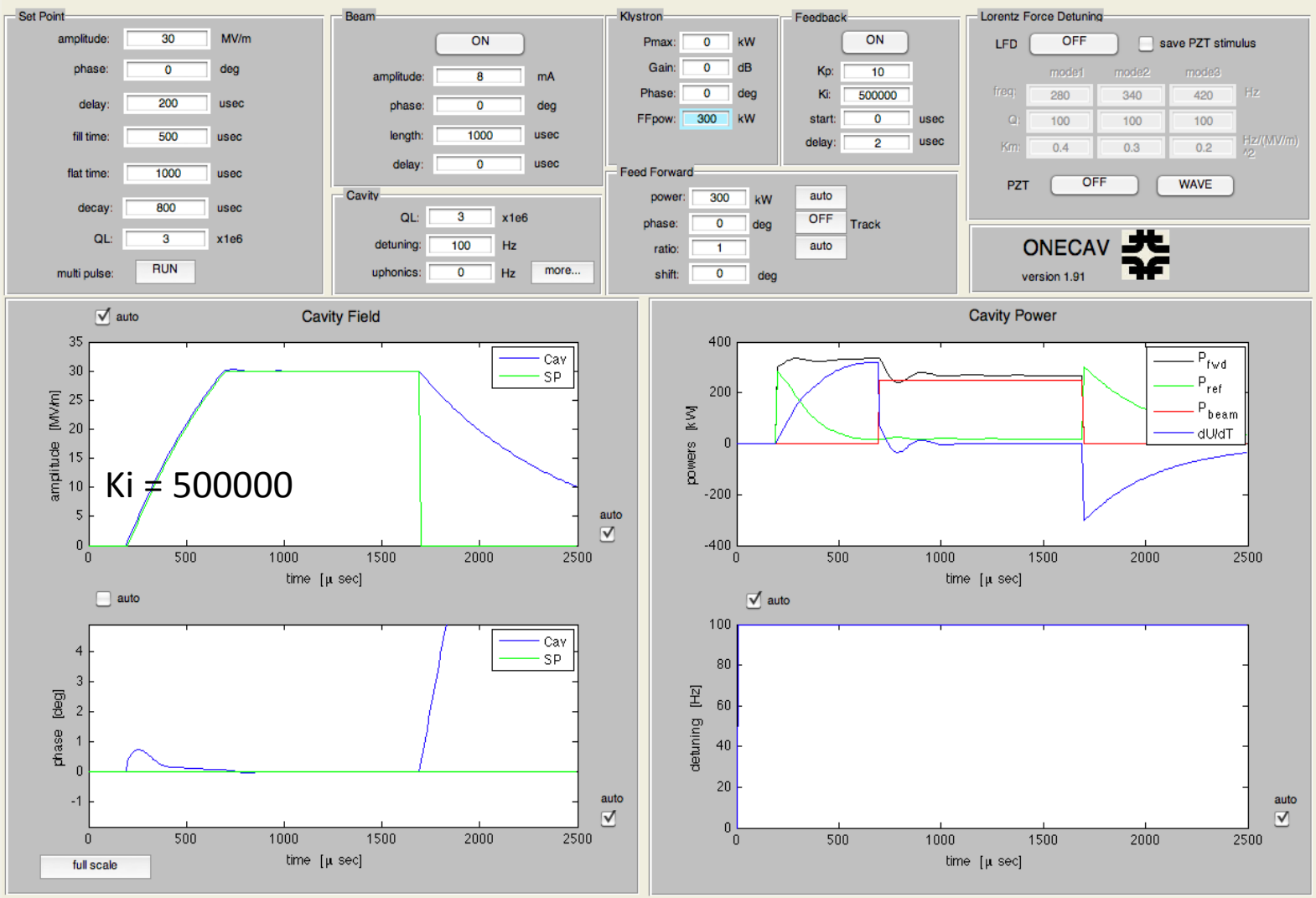

Limits of Proportional Gain

Kp =110
Delay = 2us
Detuning=100Hz

Low phase margin
Edge of stability

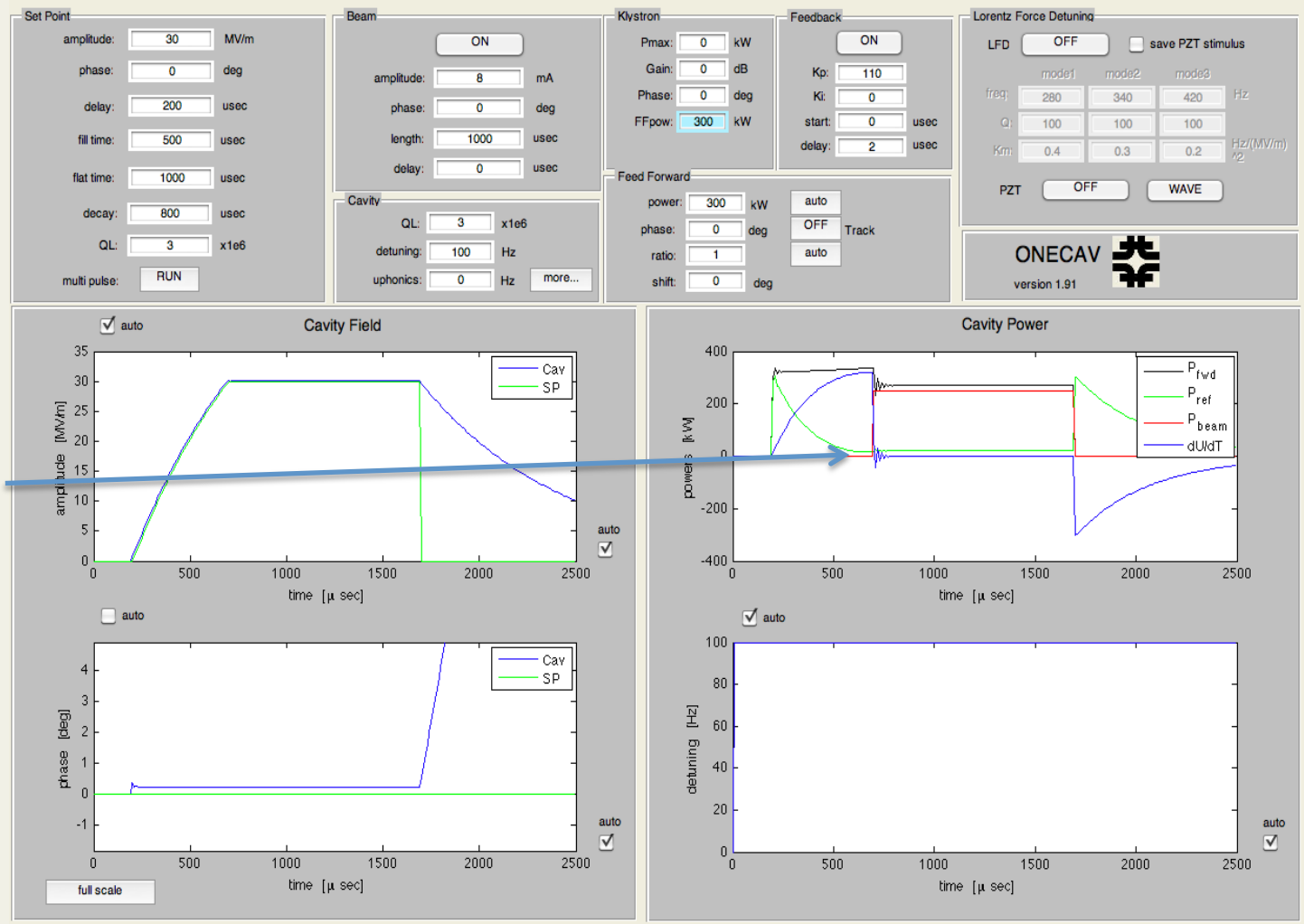

Adding Beam Phase Angle

Beam phase:
15 degrees off crest

Reactive component of beam current pulls cavity phase during flattop

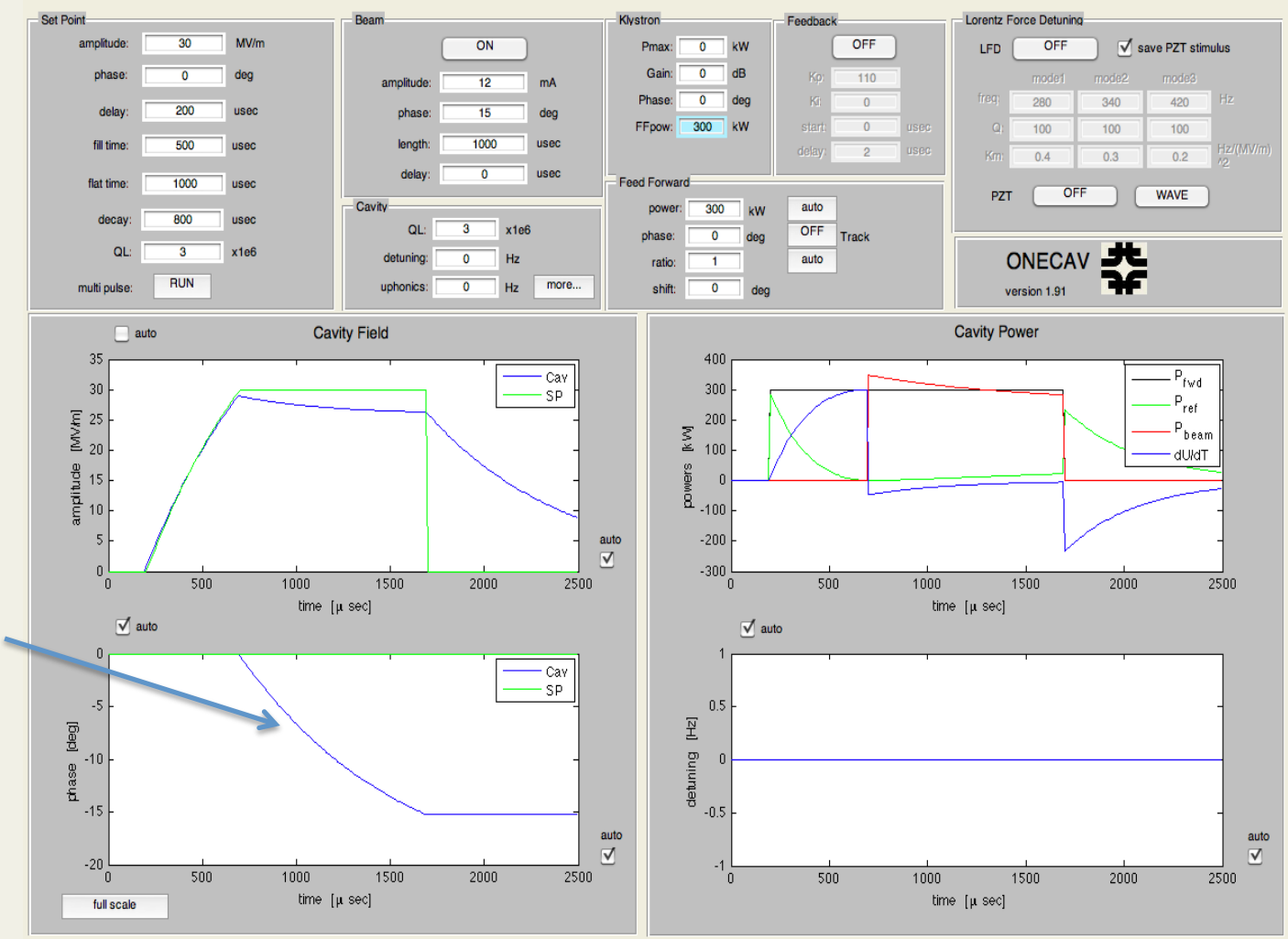

With Feedforward Beamloading Compensation

Feedfoward does most of the work in canceling the beam vector in amplitude and phase

A small error is left for feedback

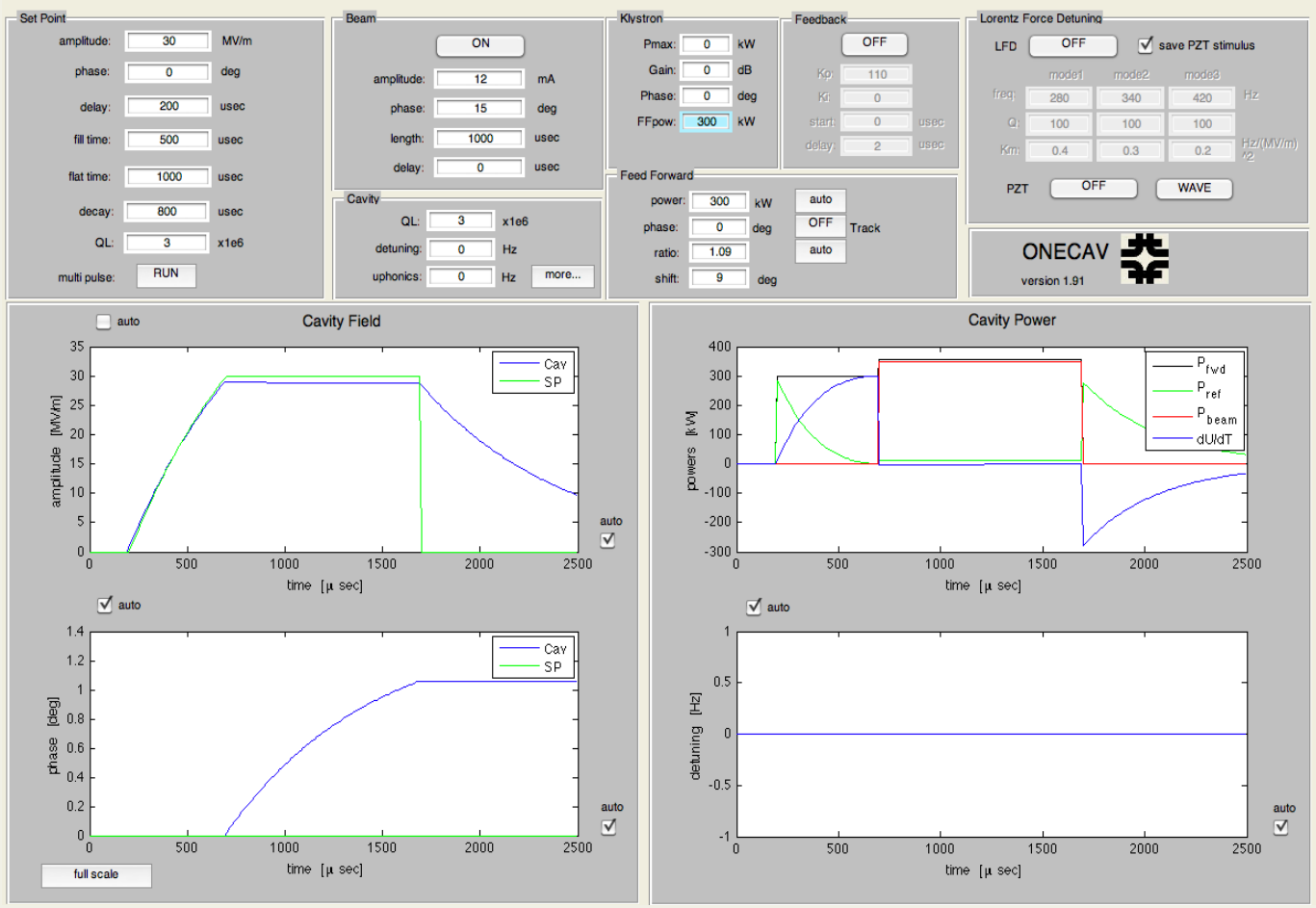

Perturbation analysis

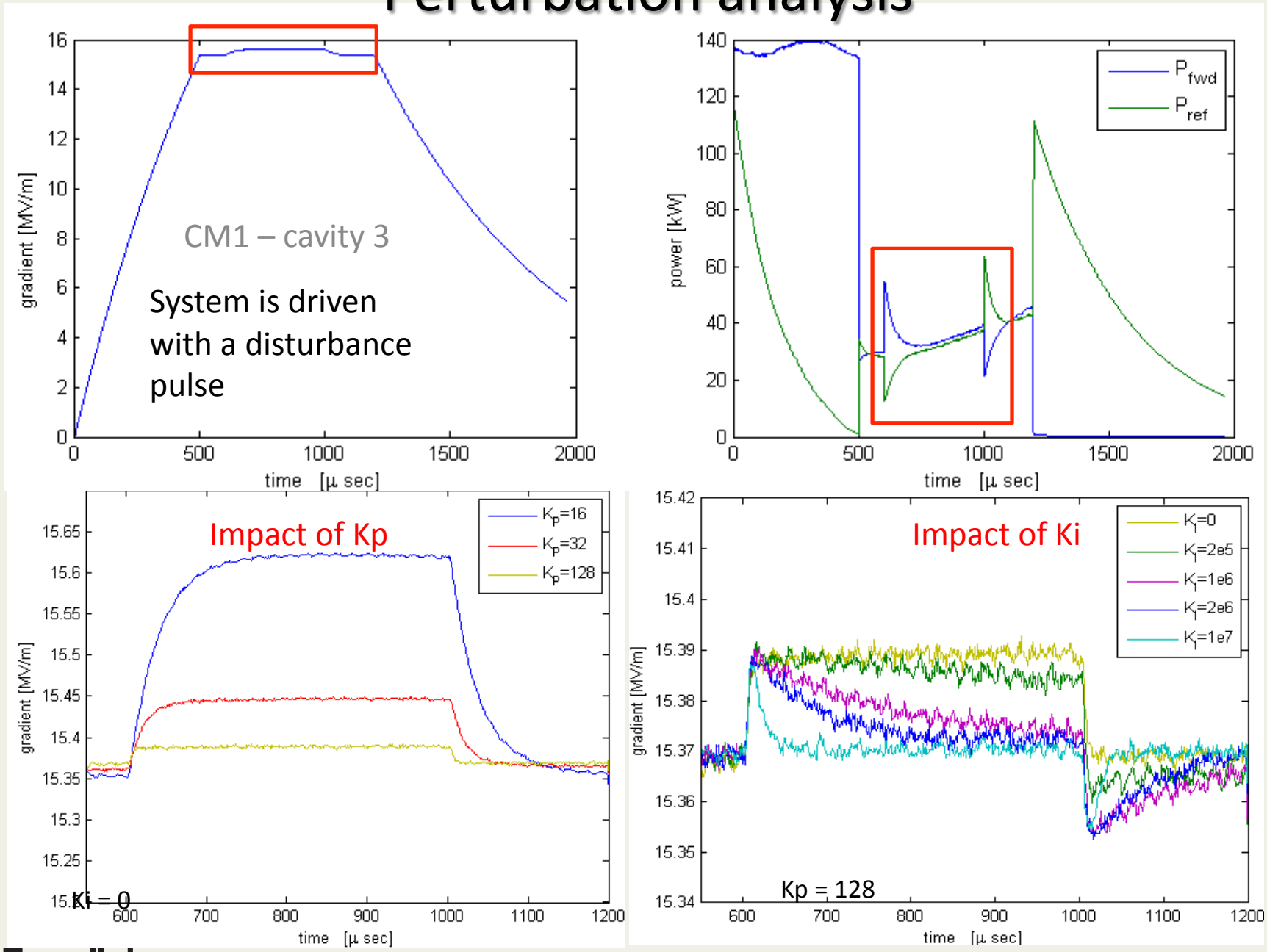

Fermilab

The phase of 7 cavities in CM1 with 10 Hz peak to peak microphonics

5

Phase (degrees)

0

-5

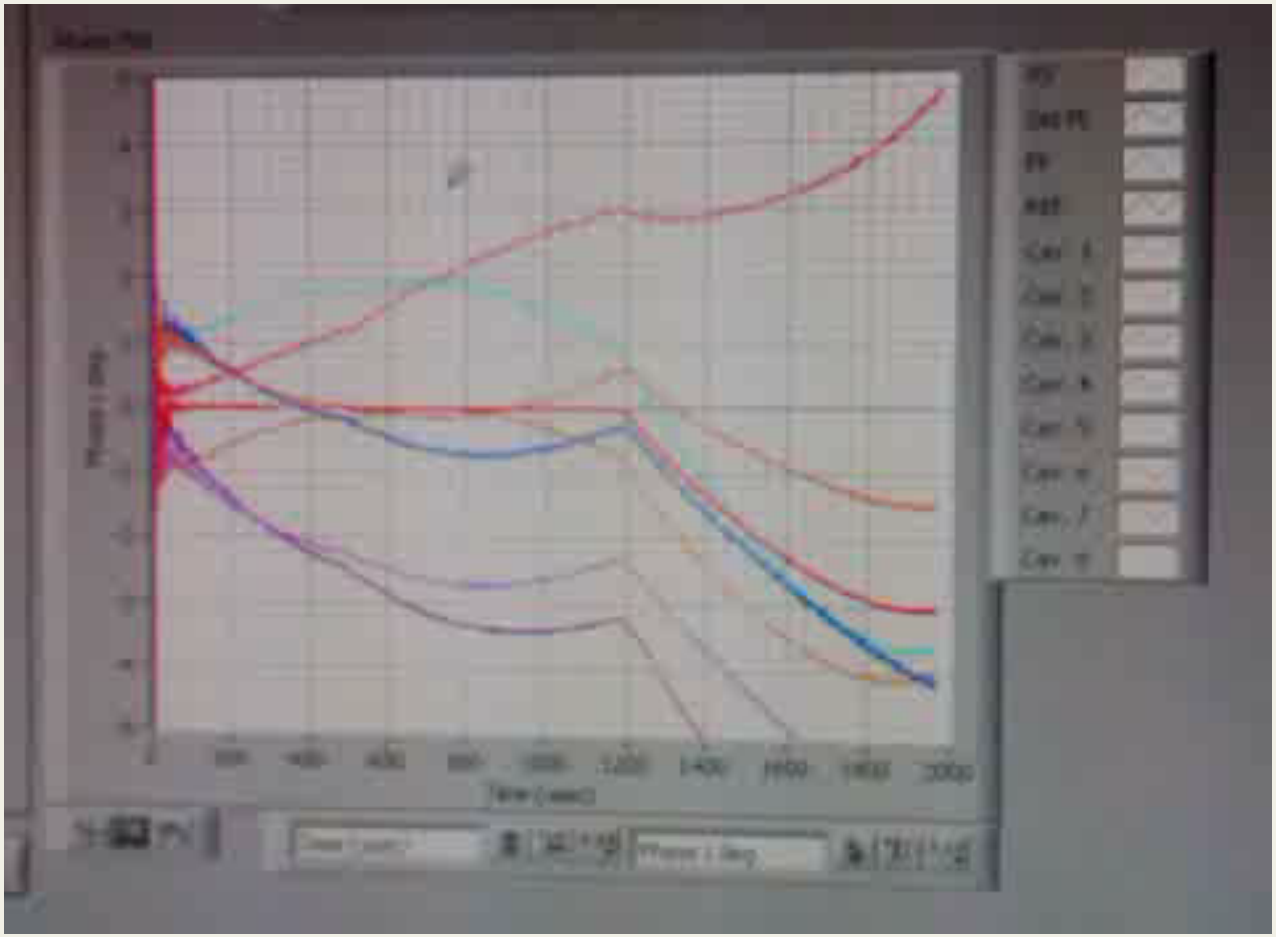

0

2 msec

Lorentz Force Detuning

Cavity is pre-detuned by 400 Hz

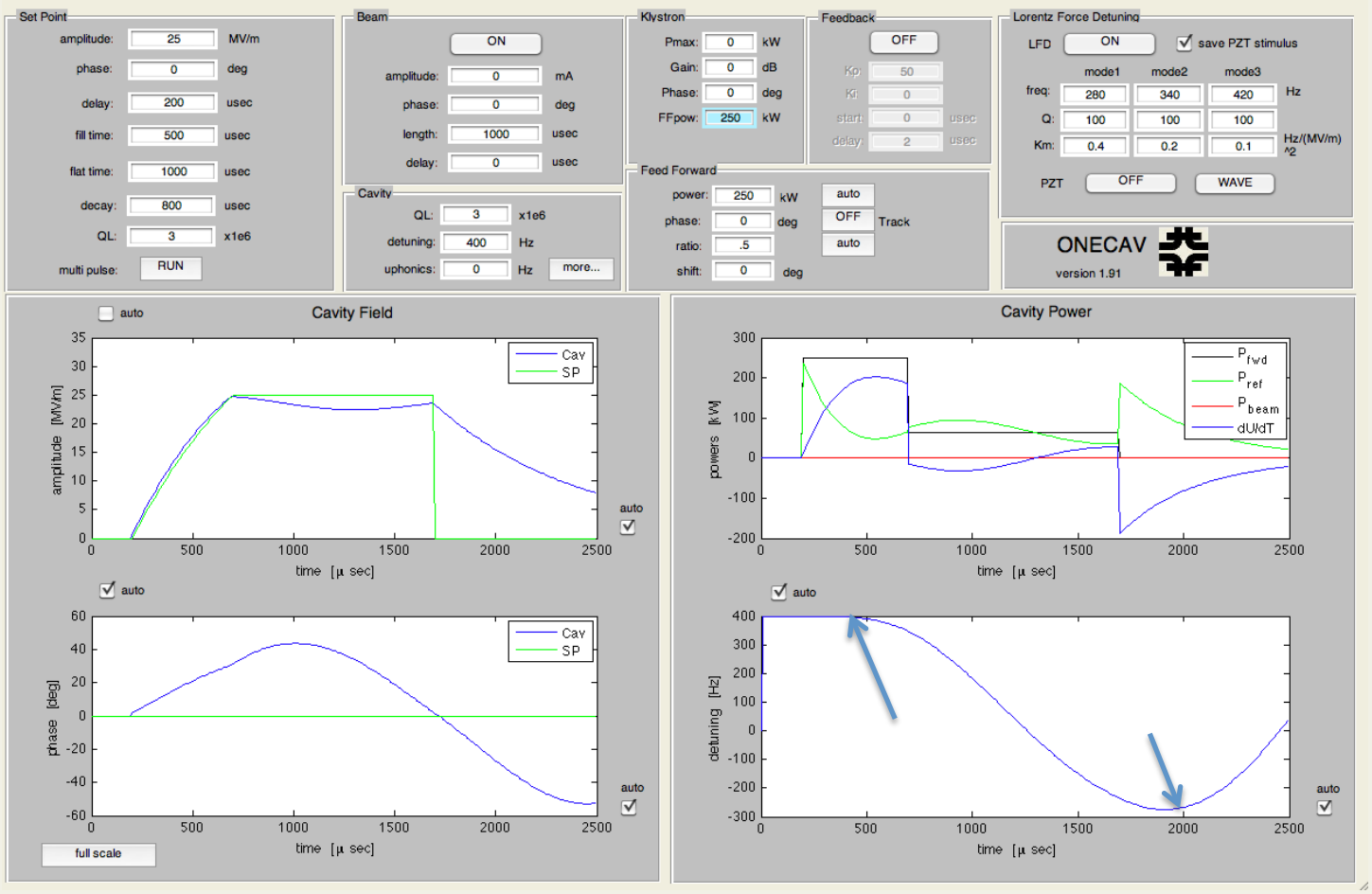

LFD with Feedback

High forward power is required to overcome detuning

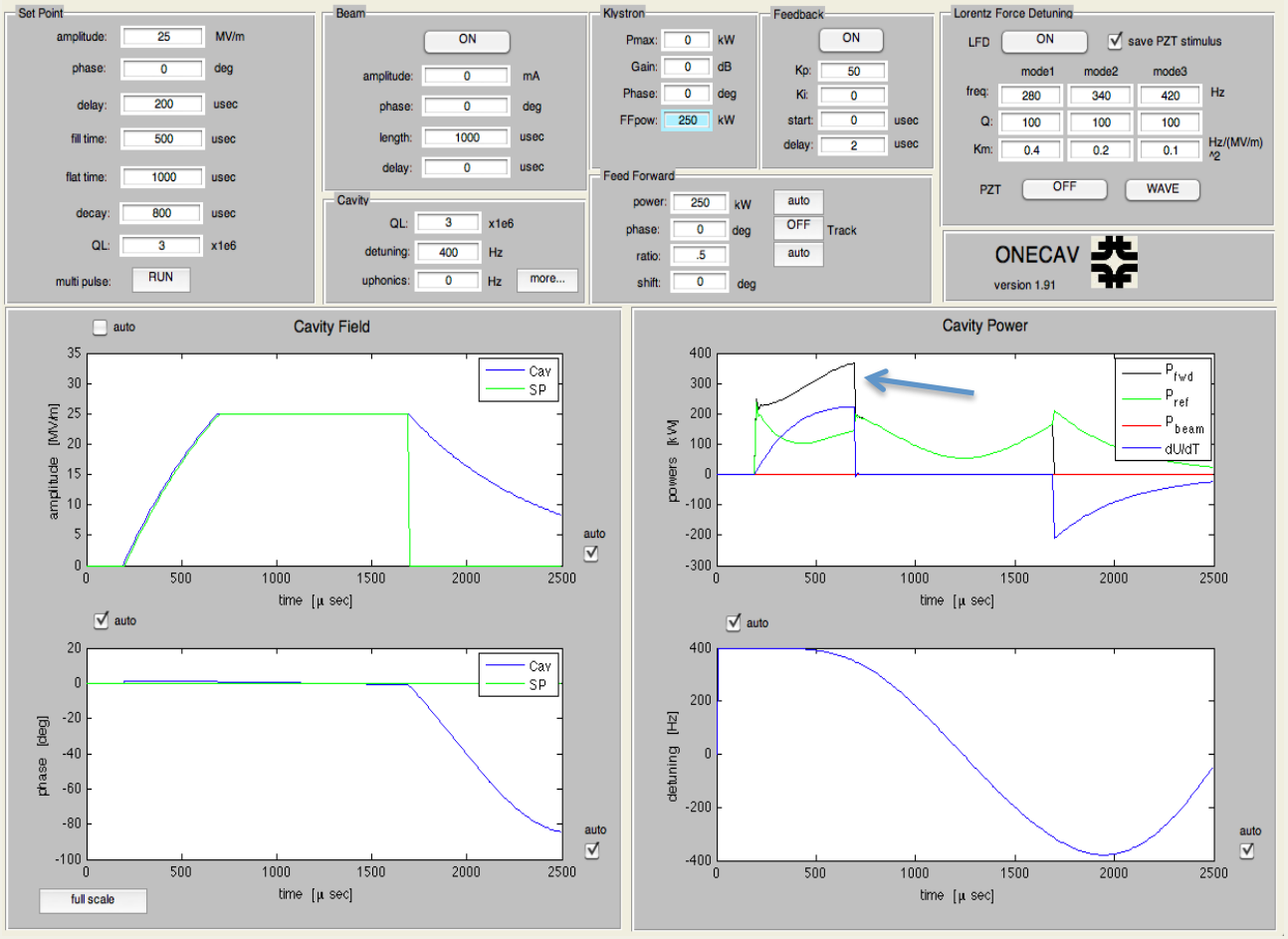

Resonance Control of SCRF cavities

- Cavities are constructed of thin wall niobium
  - High heat transfer to helium bath
  - Allows for required tuning by mechanical means
  - Niobium is expensive
  - Unwanted detuning from:
    - helium pressure fluctuations, external vibration, Lorentz Force Detuning (LFD)
- Off resonant cavities-> lower the field gradient, shift phase
  - This disturbance must be corrected by the LLRF system
  - Requires additional forward power to compensate
    - If power amp capability is exceeded then regulation will be lost
  - Disturbances in the 10^6 range
  - Required control may be at in the 10^8 range

Typical Parameters of Multi-Cell Cavities

	CEBAF	CEBAF Upgrade (SL21,FEL03)	CEBAF Upgrade (Renascence)	RIA β=0.47	SNS β=0.61	SNS β=0.81	TESLA 500
Frequency (MHz)	1497	1497	1497	805	805	805	1300
Gradient (MV/m)	5	12.5	18	10	10.3	12.1	23.4
Operating Mode	CW	CW	CW	CW	Pulsed, 60 Hz	Pulsed 60 Hz	Pulsed 5Hz
Bandwidth (Hz)	220	75	75	40	1100	1100	520
Loaded Q (1e6)	6.6	20	20	20	0.7	0.7	3.0
Lorentz Force detuning (Hz)	75	312	324	1600	470	1200	434
Micro-phonics (Hz, 6 s)	-	+-10	+-10	+-10	+-100	+-100	NA
Stiffness (lb/in)	26,000 (calc'd)	37,000 (calc'd)	20,000-40,000 (calc'd)	<10,000	8,000 (meas'd)	17,000 (meas'd)	31,000 (est'd)
Sensitivity (Hz/μm)	373	267	~300 (calc)	> 100	290	230	315

compiled by E. Daly (ERL workshop 2005)

Mechanical Tuner

- Principle: Mechanical change of length or mechanical deformation of the cavity

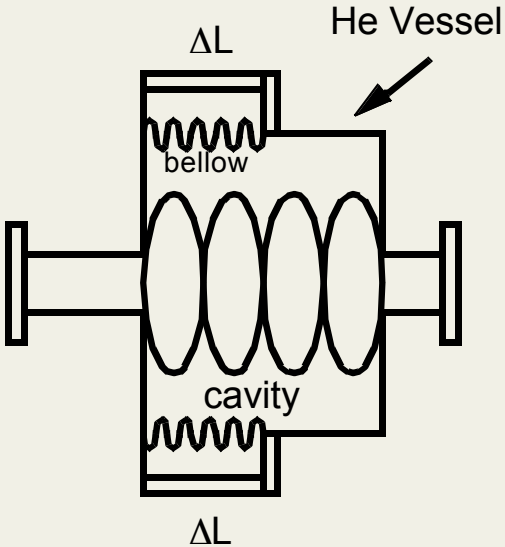

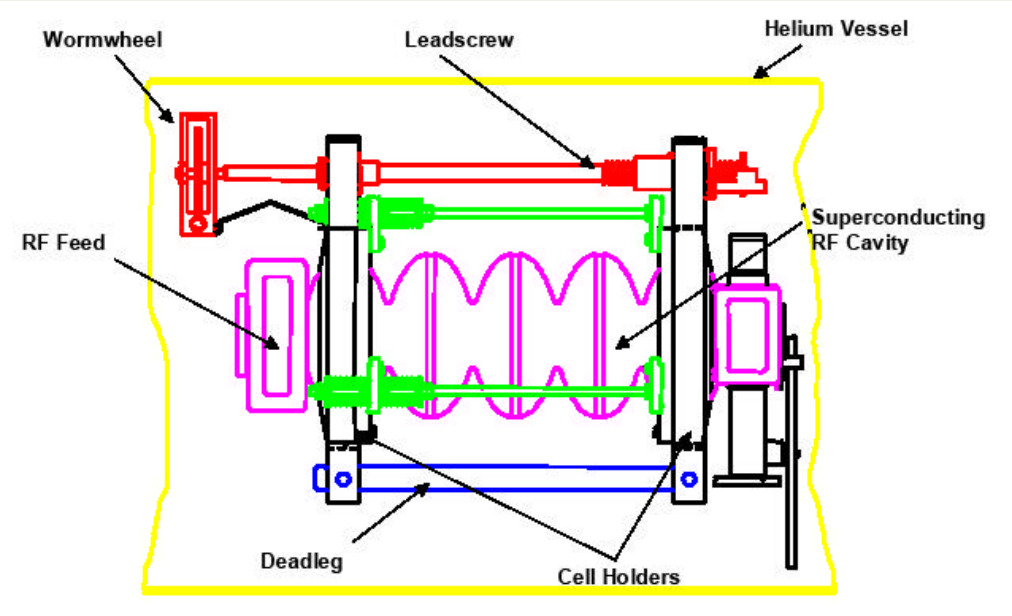

Courtesy of Stefan Simrock

FAST TUNER/Piezo Actuators

The use of piezo actuators to compensate LFD was pioneered at DESY:

M. Liepe, et. al., "Dynamic Lorentz Force Compensation with Fast Piezoelectric Tuner", PAC2001, Chicago, USA

Piezo-actuators connected to the beam flange of the cavity. Piezos are driven by short electrical pulse, generate acoustic impulse. This impulse cancels detuning of the cavity induced by Lorentz forces.

Tuner Designs

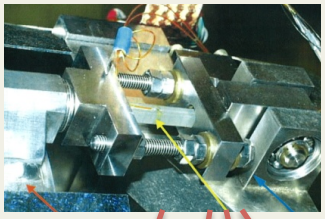

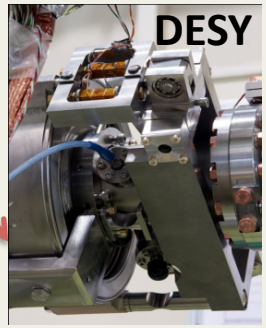

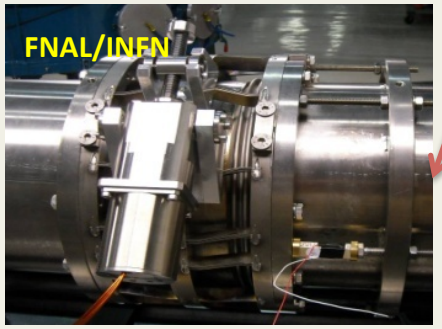

Many different design approaches

ILC Blade Tuner

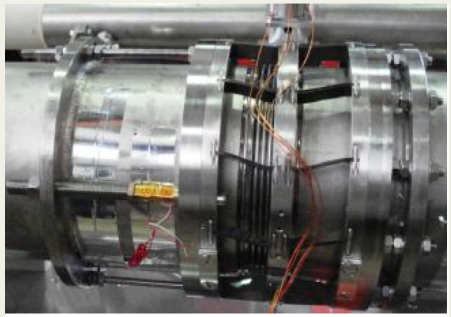

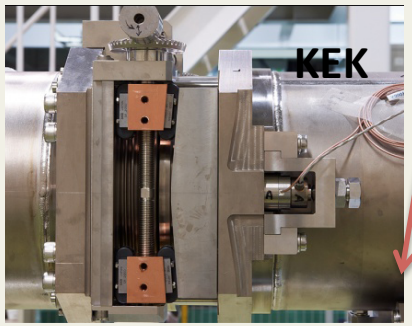

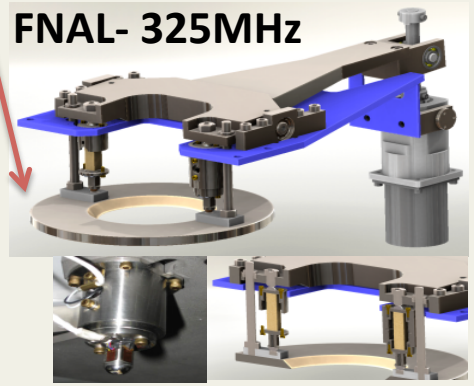

Lorentz Force Detuning

- Electromagnetic fields in the cavity cause the cavity wall to distort which changes the resonance frequency of the cavity
- Effect is proportional to the square of the field strength
- The system can become non-monotonic and unstable
- For pulsed RF, the Ponderomotive force impulse is often much shorter than the mechanical time constant
  - Excites many mechanical modes, much like ringing a bell

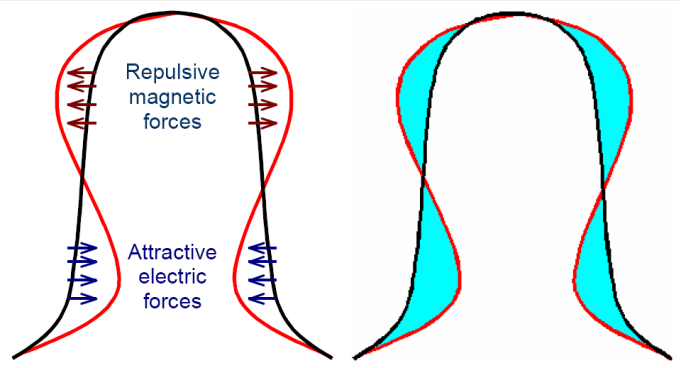

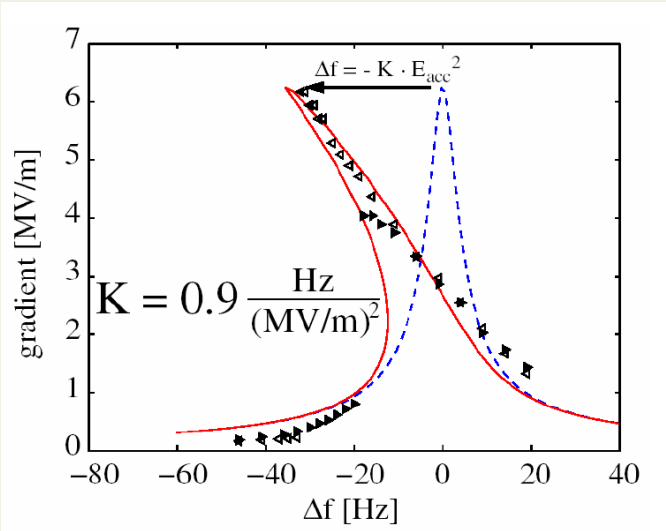

CW-mode operation

Lorentz Force Detuning and RF Power Requirements

$$\frac{\Delta P}{P_0} = 0.25\left(\frac{\Delta f_{FT}}{f_{1/2}}\right)^2$$

$$\Delta f_{FT} = -K_{FT} \cdot E_{acc}^2$$

$$\Rightarrow \quad \frac{\Delta P}{P_0} = 0.25\left[\frac{K}{f_{1/2}}\right]^2 E_{acc}^4$$

$$-K_{FT} \approx 0.5$$ (for FlatTop~800us)

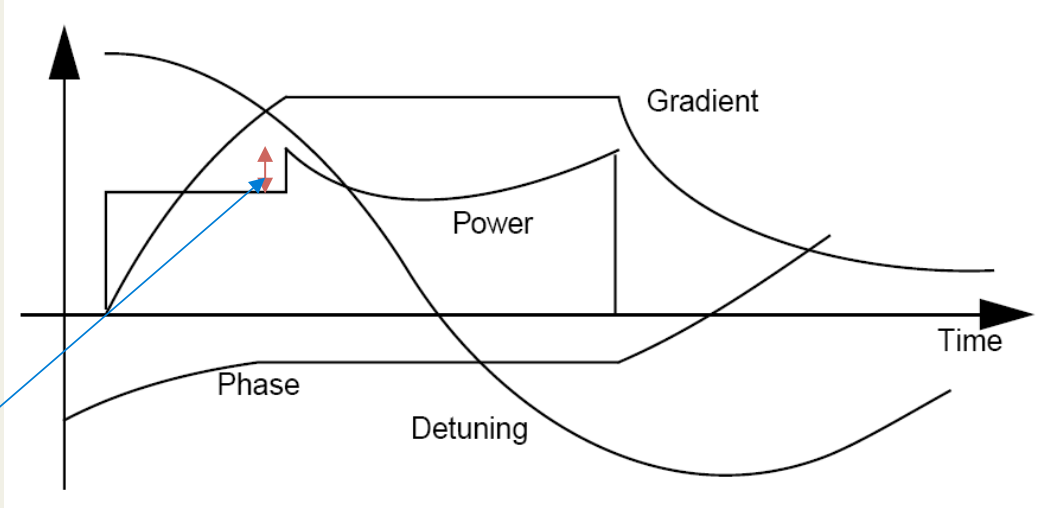

-Peak power increases with the **fourth** power of accelerating gradient:

Example: for Eacc=35MV/m up to 100-150% extra RF power:

-Over-sized Klystron

- More difficult control of RF (LLRF)

W. Schappert, Y. Pischalnikov

Building a LLRF system

A typical LLRF block diagram

The controller is buried here

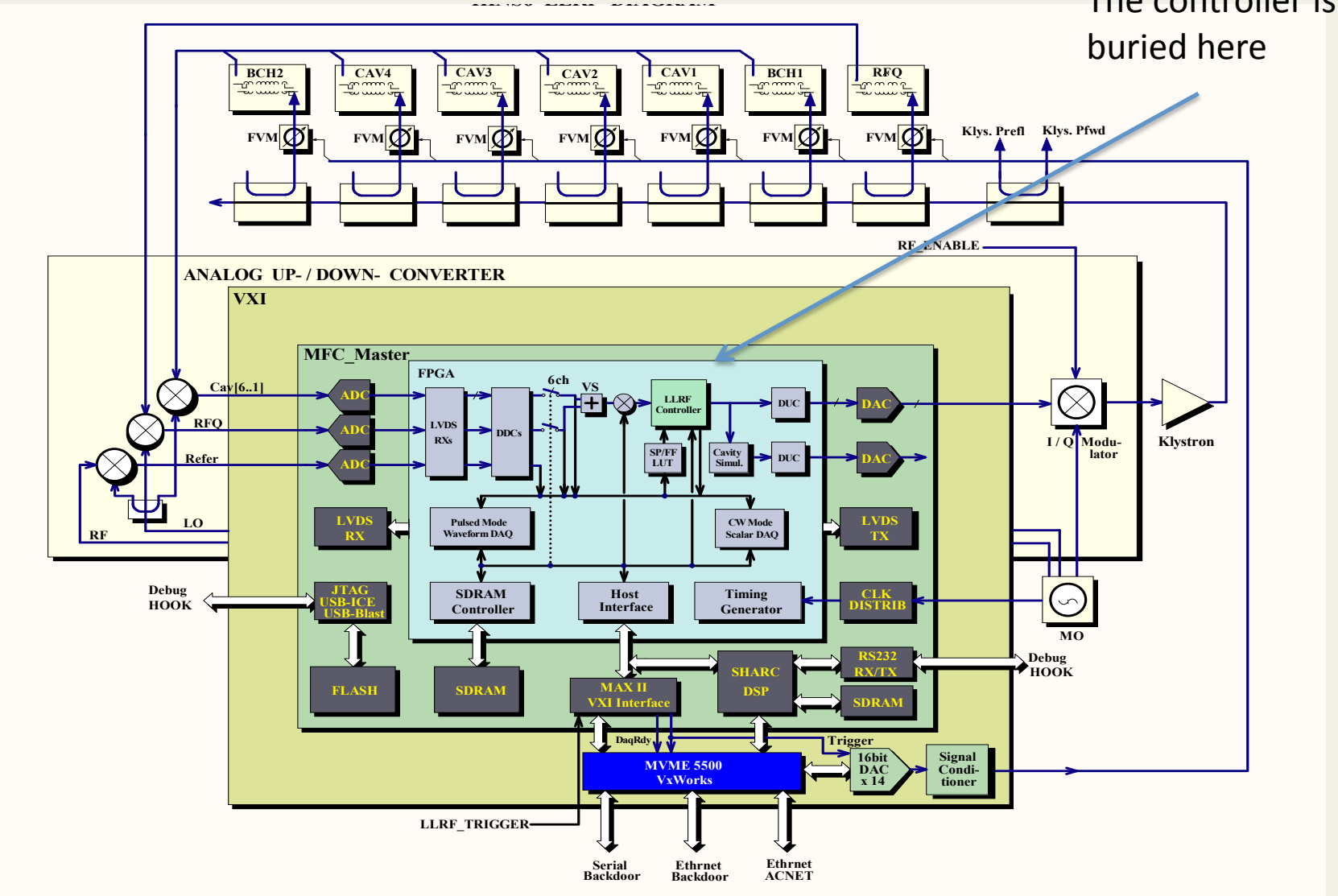

Building a LLRF system
Receiver section

- Errors in the receiver chain are driven into the cavity by feedback gain in the controller
  - Quantization noise in the ADCs
  - Harmonic distortion aliased back into the passband
  - Quantization error
  - Channel to channel crosstalk
  - Nonlinearities in the down converter

You can't recover from a bad receiver design!

Frequency Mixer (Ideal)

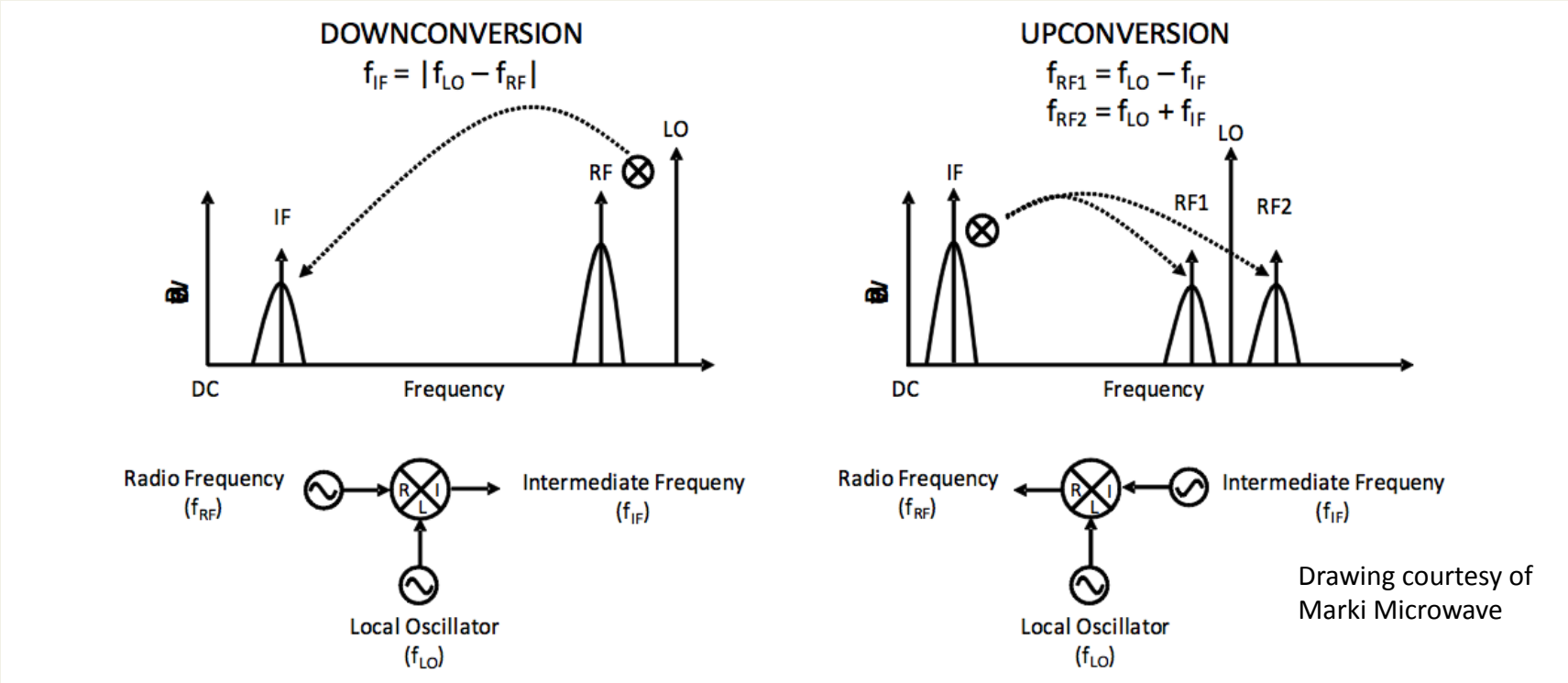

$$y_{IF}(t) = y_{RF}(t) \times y_{LO}(t) \qquad y_{RF}(t) = y_{IF}(t) \times y_{LO}(t)$$

Down conversion conserves phase, thus lowering jitter sensitivity by: $\frac{f_{IF}}{f_{RF}}$

Frequency Mixer (real)

- Mixers are based on diodes which are the nonlinear devices used for current switching
  - This process generates unwanted harmonics
  - Diodes are not perfect switches and distort the IF signal producing harmonics

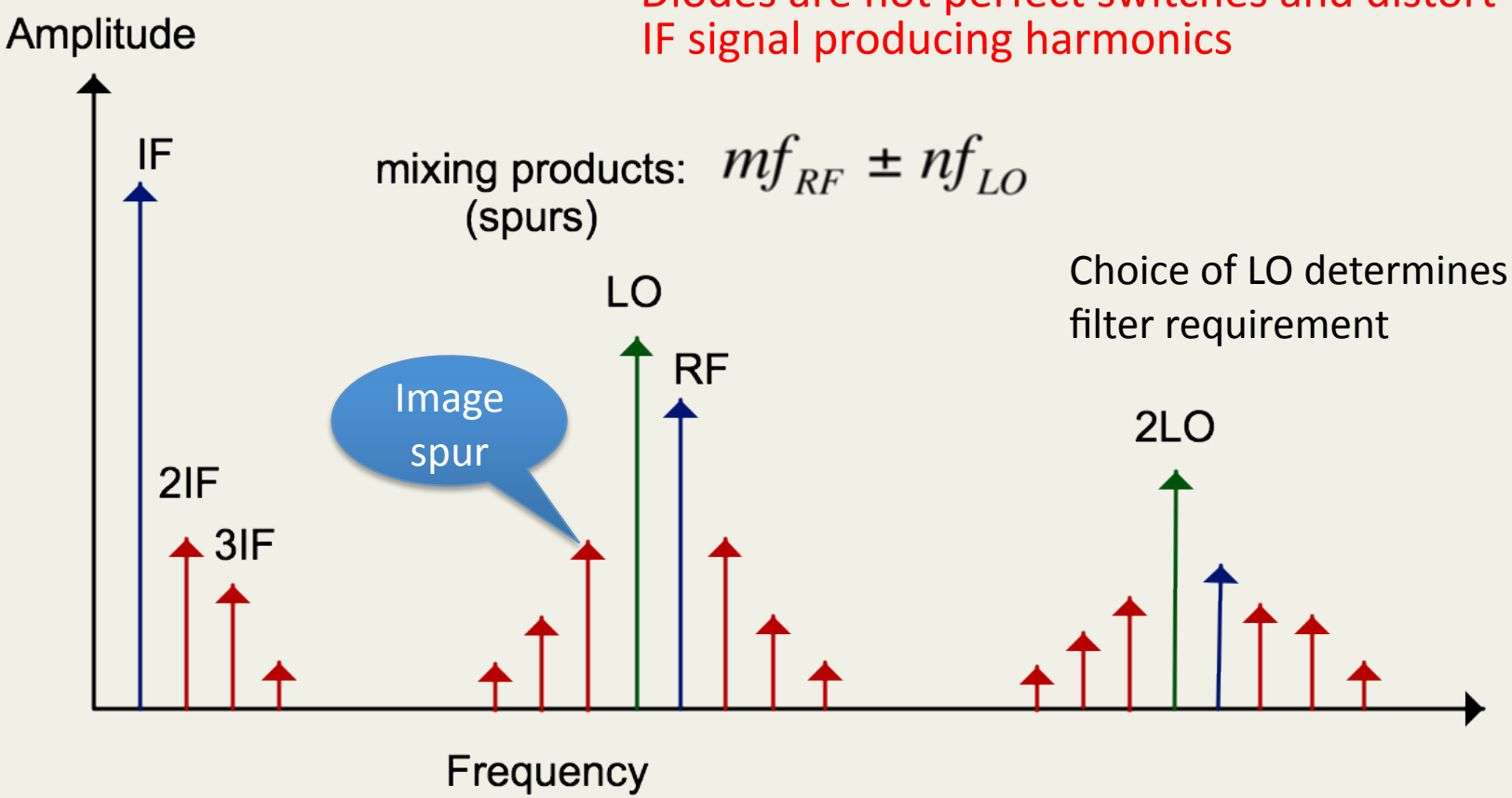

Choice of LO determines filter requirement

$2 * LO \times 1 * RF "image" Spur$

- Mixing products are generated in the mixer and are “sourced” to all three ports
  - The 2LOx1RF spur is reflected off of the RF bandpass filter and then mixed down on top of the IF

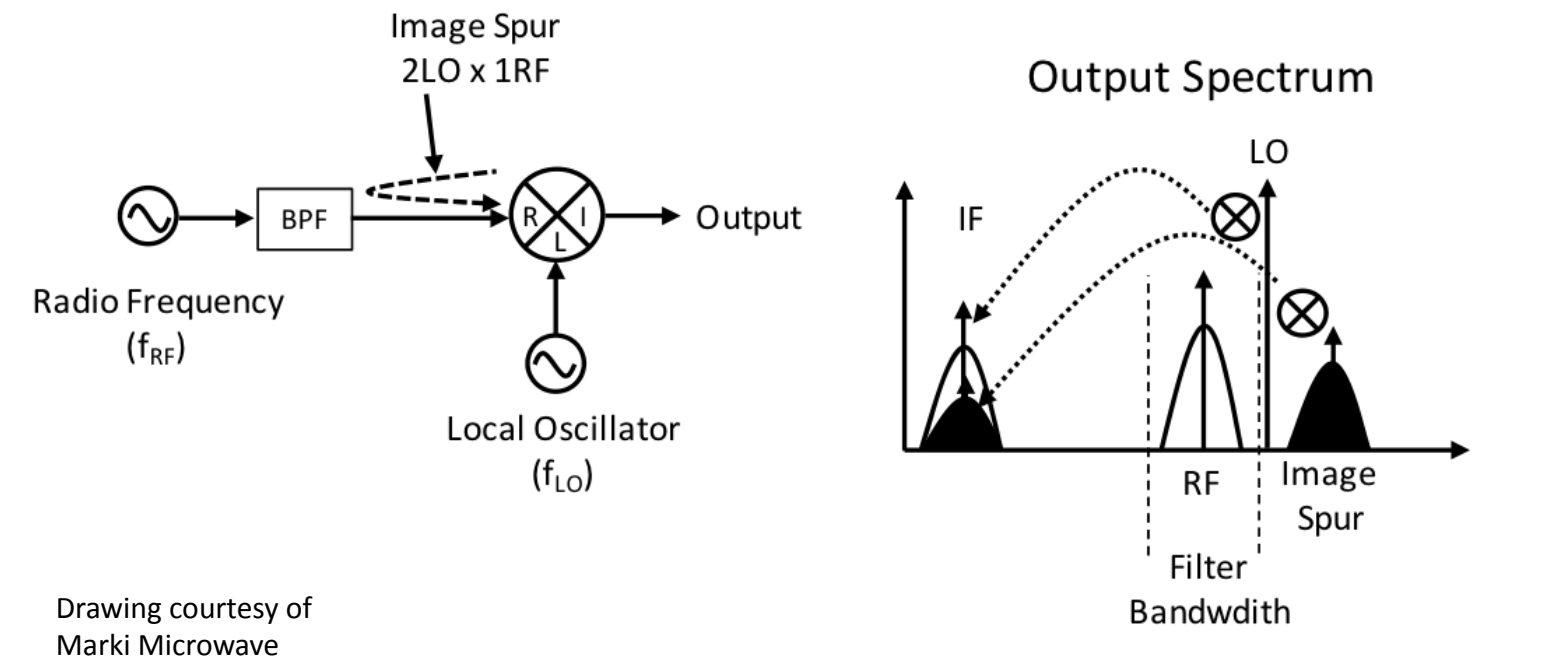

Drawing courtesy of Marki Microwave

Detection process of the analytic IF signal mixed down to baseband (zero Hertz)

- Loop controller processing is usually done at baseband as these signals are needed for diagnostics
- Most modern SCRF LLRF systems digitize RF or IF signals and frequency translates them to baseband with Digital Down Converters (DDC) built with Numeric Controlled Oscillators
  - Other options are direct conversion or direct IQ conversion

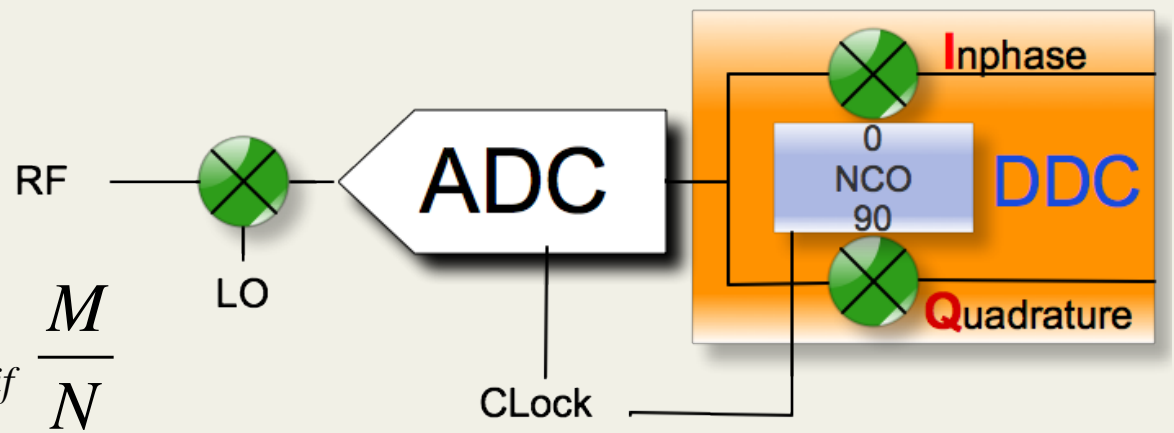

$$f_s = F_{if} \frac{M}{N}$$

IF M/N is rational, the NCO table can be small

If M/N = 4 then the phase step is 90 degrees ("IQ" sampling)

Harmonics alias down into the first Nyquist zone

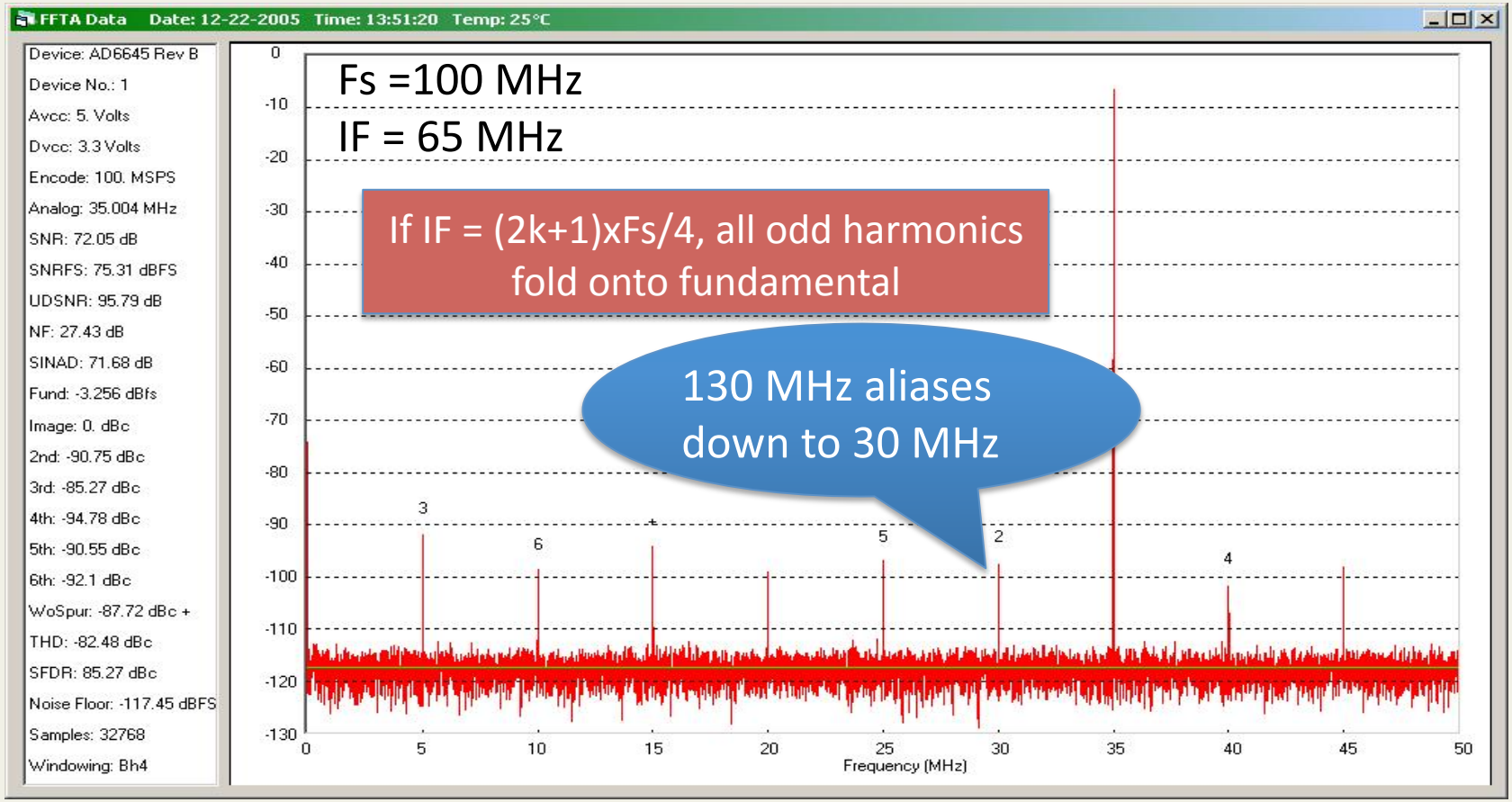

Choose F_{IF} and F_{clock} so that spurs stay outside the control bandwidth

The effect of ADC clock jitter on the signal to noise ratio (1000 fs jitter)

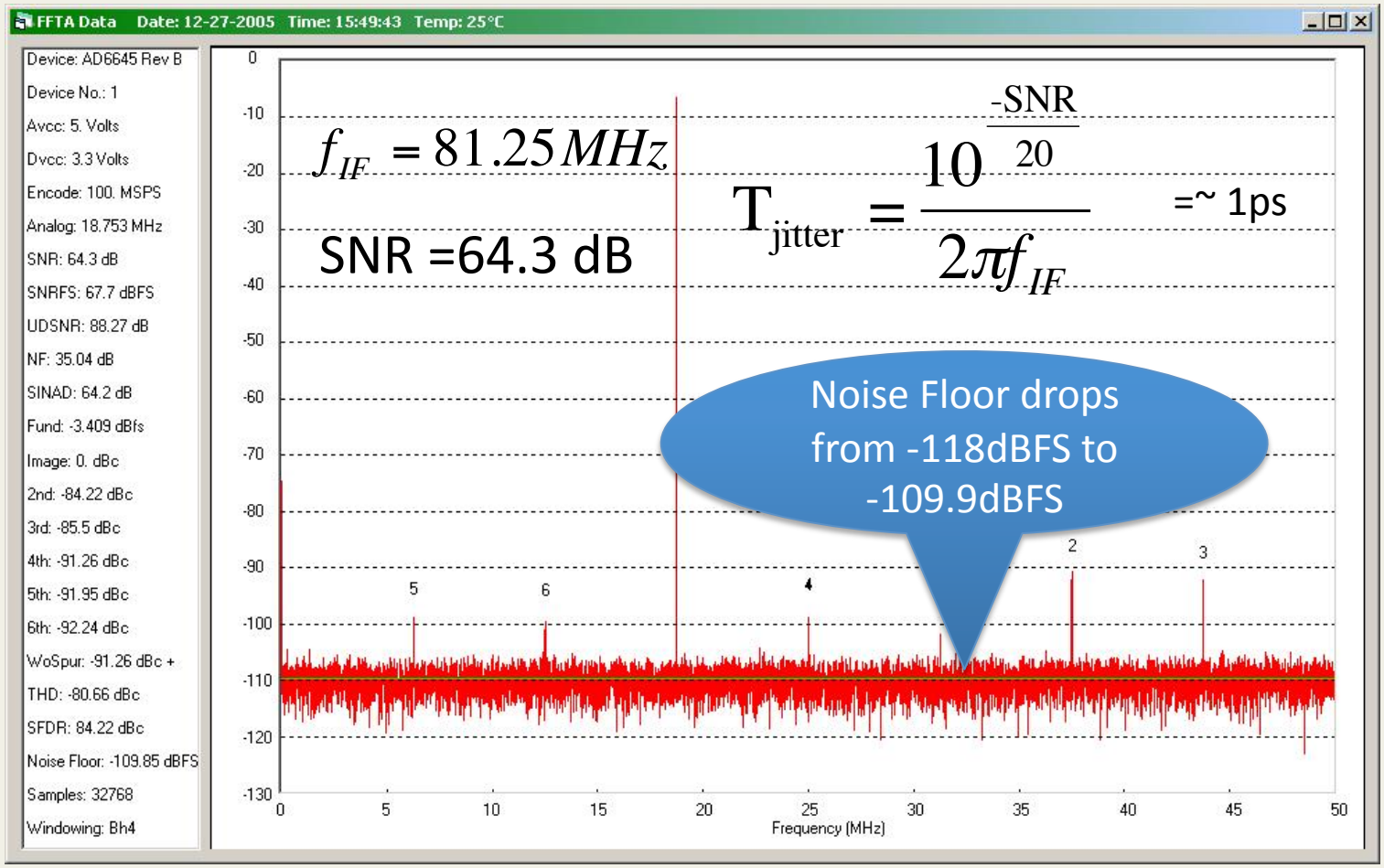

Fermilab ILTCA receiver chain noise
12 bit ADC, 62.5 MHz F_s

1.3Ghz RF

Amplitude

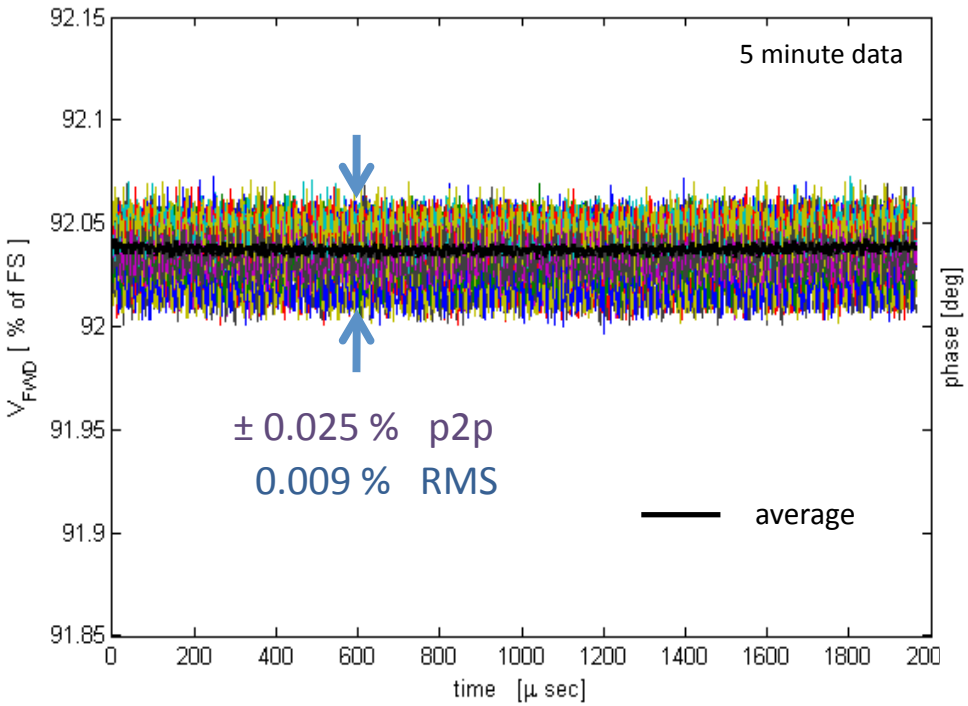

Phase

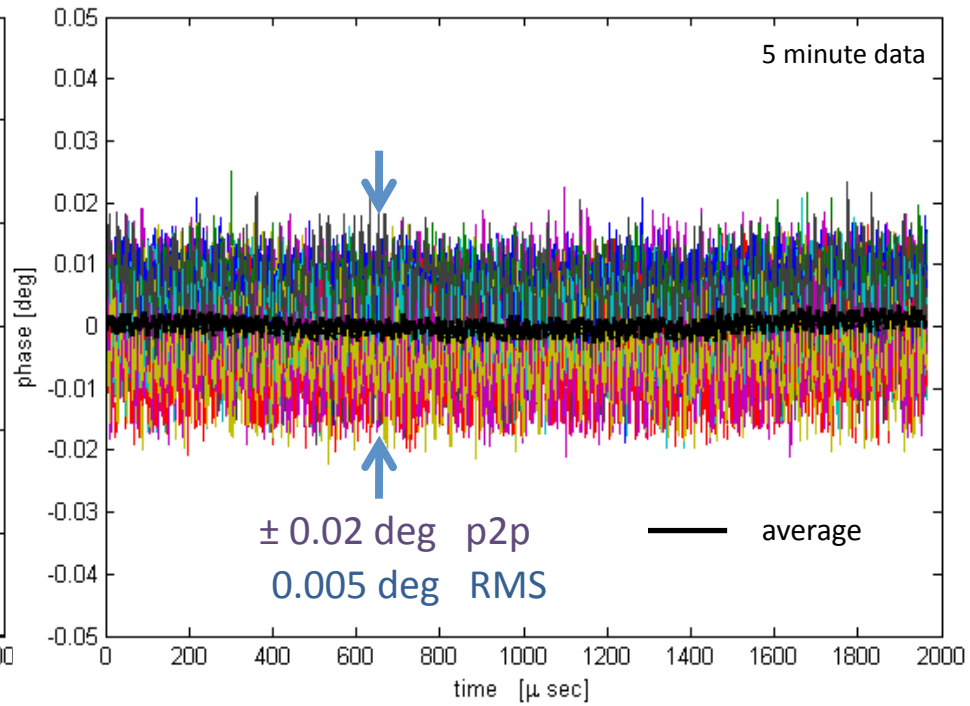

Calculated Phase Noise Contributions at Various Points

- With high loop gain the noise floor is completely dominated by the receiver noise [10Hz – 100 kHz].
- If the front-end is properly designed the limitation of the receiver is the ADC.

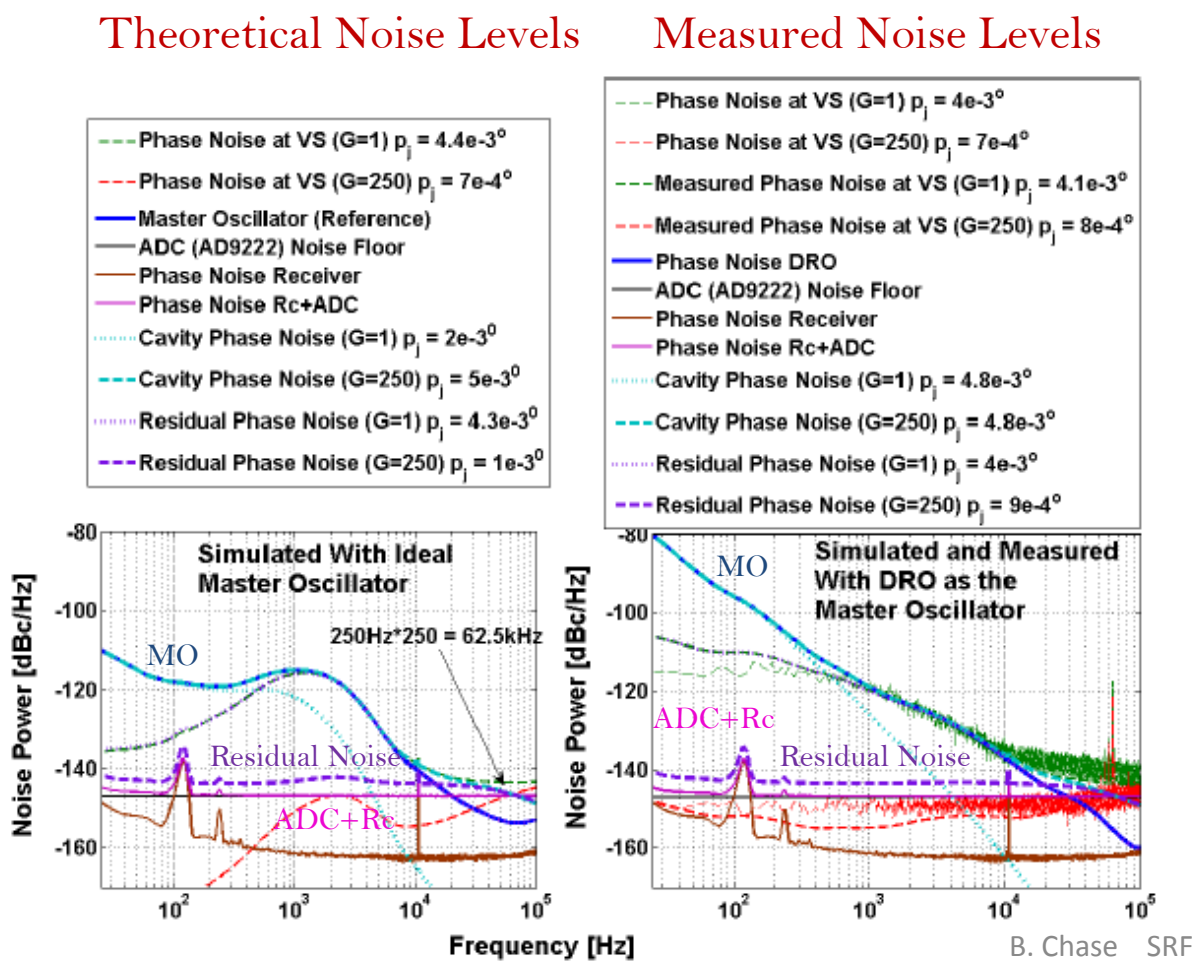

B. Chase SRF 2011

Design and build a LLRF system

Controller section

Generator Driven Resonator
-Best for lower Q pulsed systems
-With tracking PLL will behave like SEL

Self Excited Loop
-Tracks detuned cavities in CW systems on startup
-Behaves like GDR when locked to M.O.

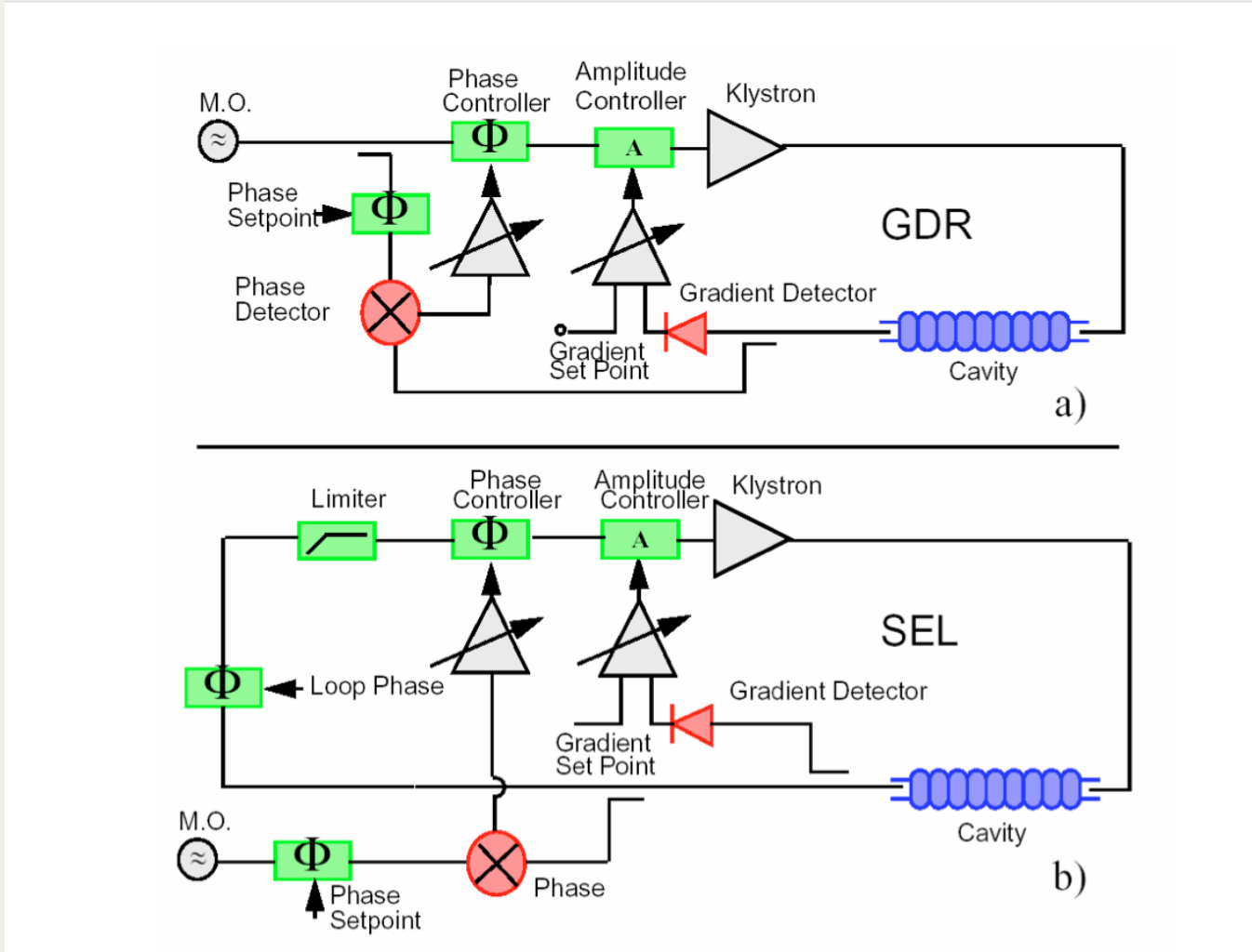

Example of a digital GDR Controller

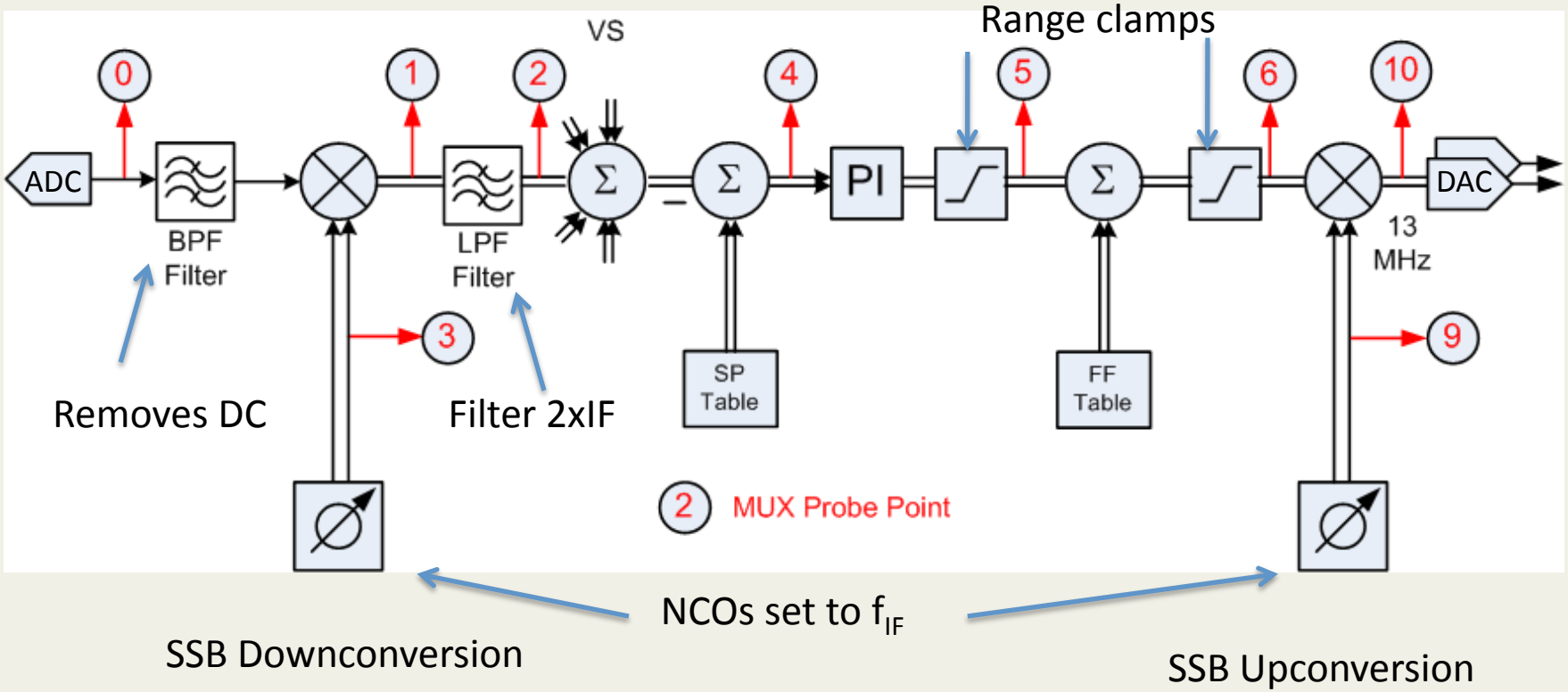

NCOs set to f_{IF}

SSB Downconversion

SSB Upconversion

Control system interface diagram

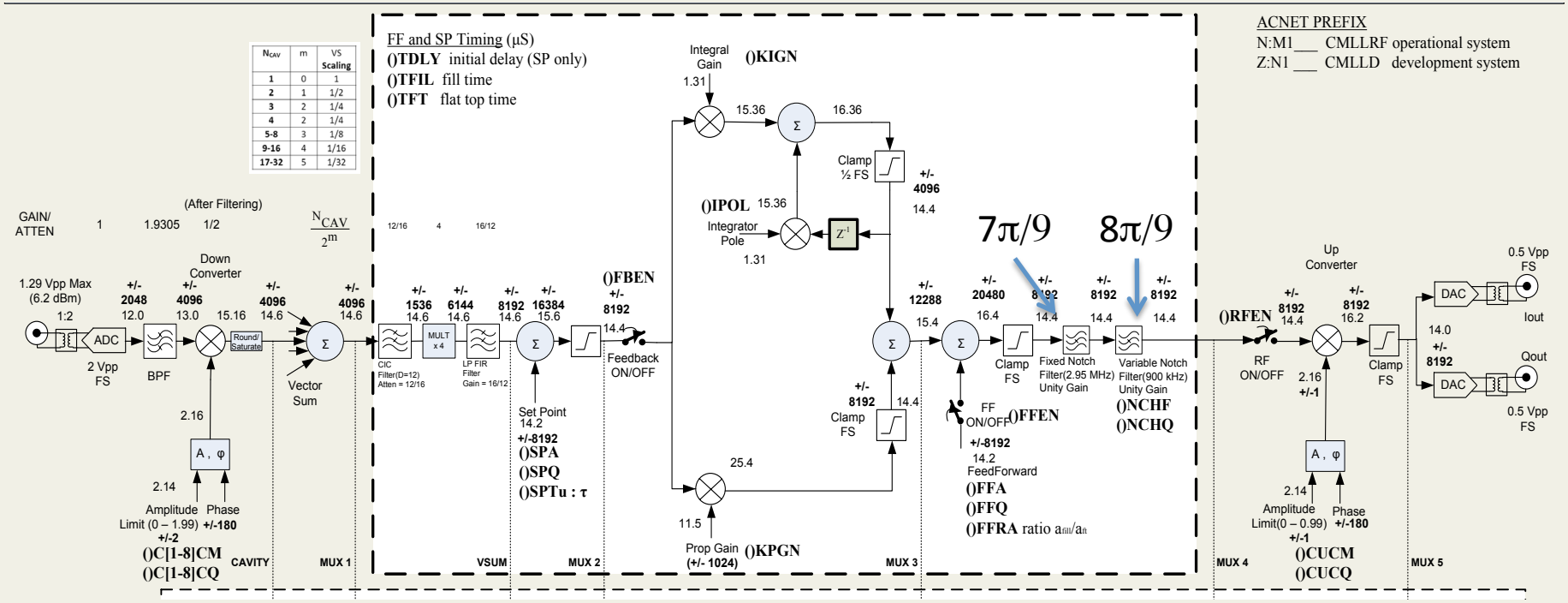

Cavity Cal.

Forward RF Cal.

32 Cavity Controller

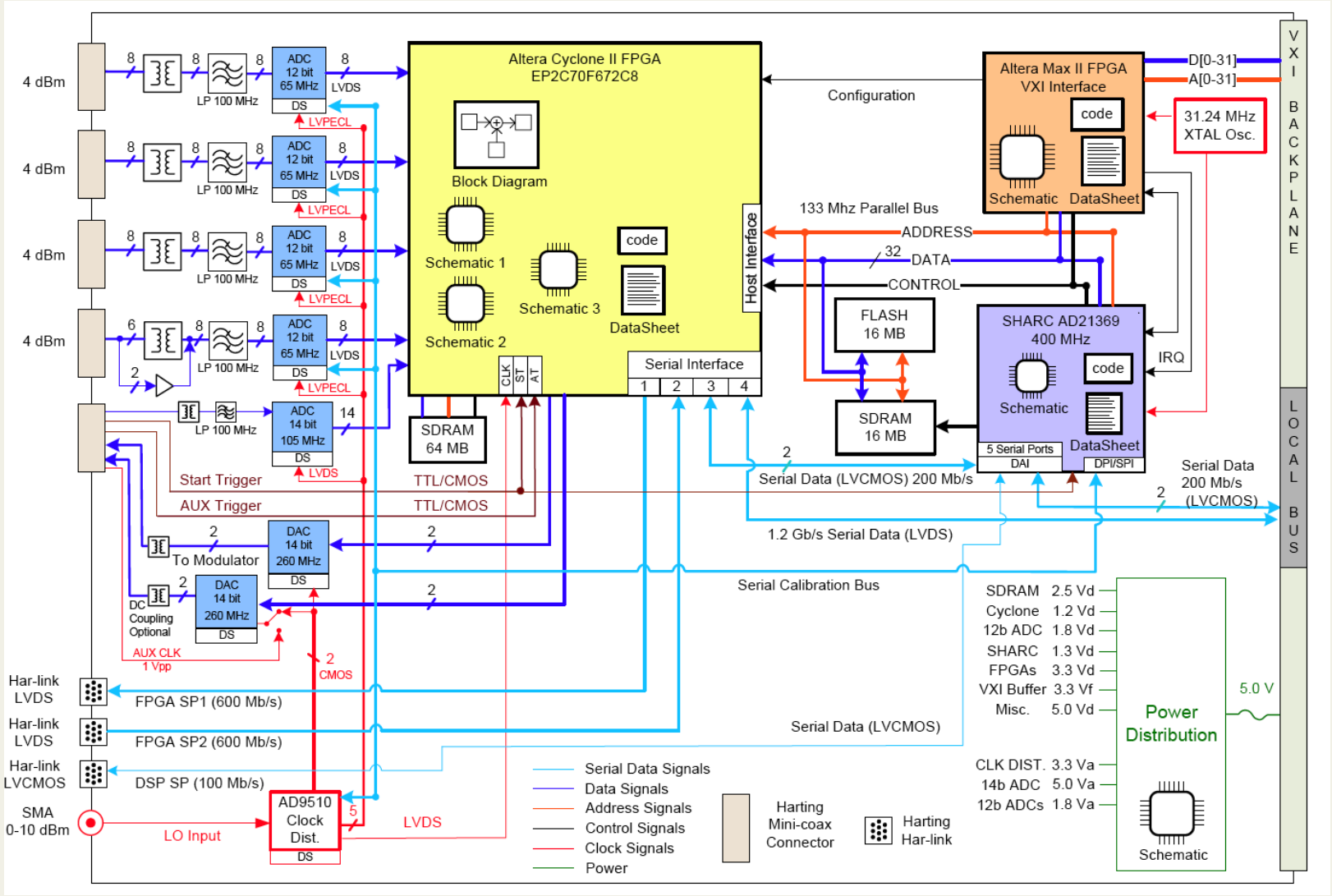

Controller Hardware

Technologies of interest:

-Multi-channel ADCs

-Low Voltage Differential Signaling (LVDS) high speed serial connections

-Differential IF signal paths

-8 channel coax connectors

-Shielded enclosure

-Low cost per channel

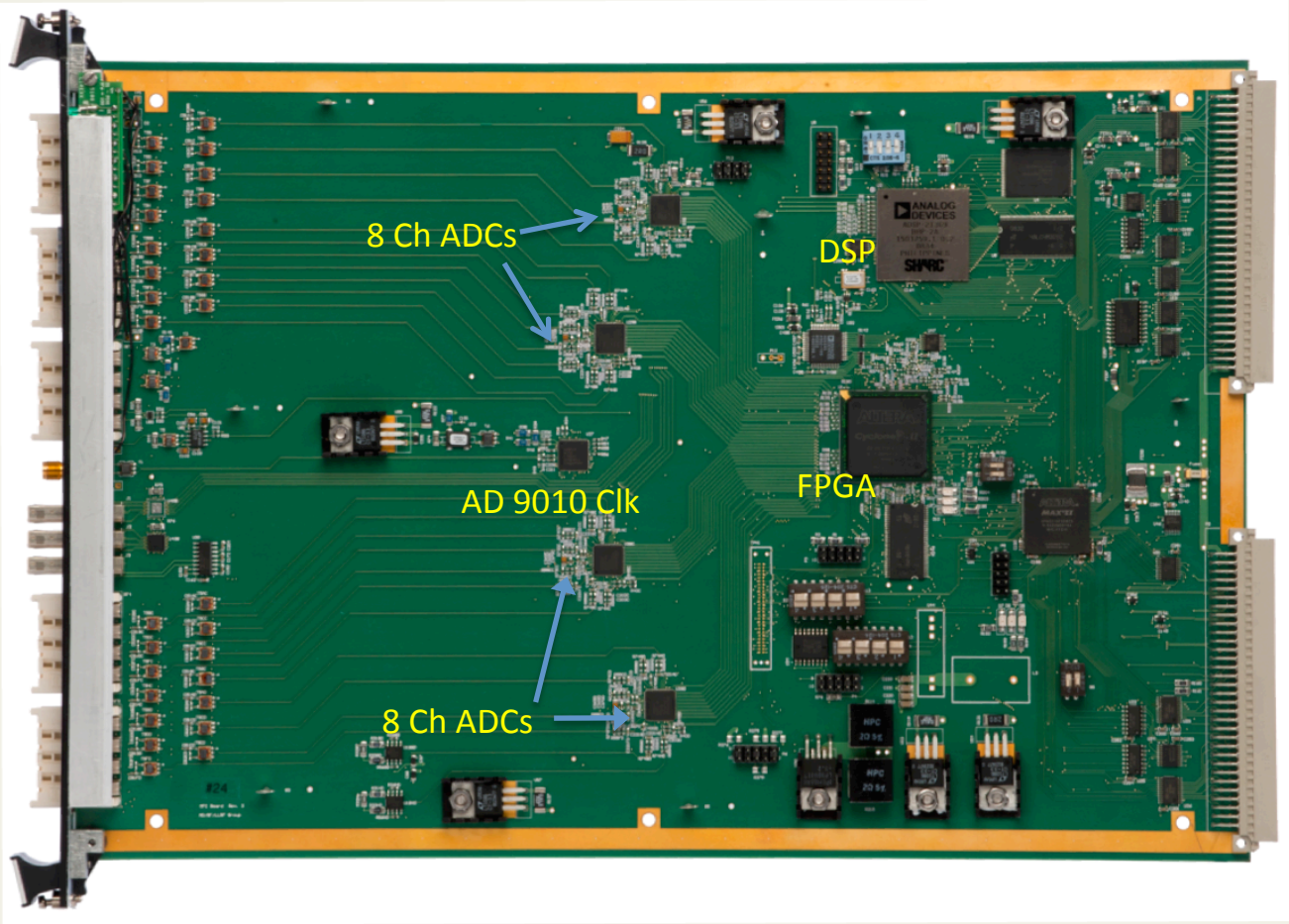

Master Oscillator

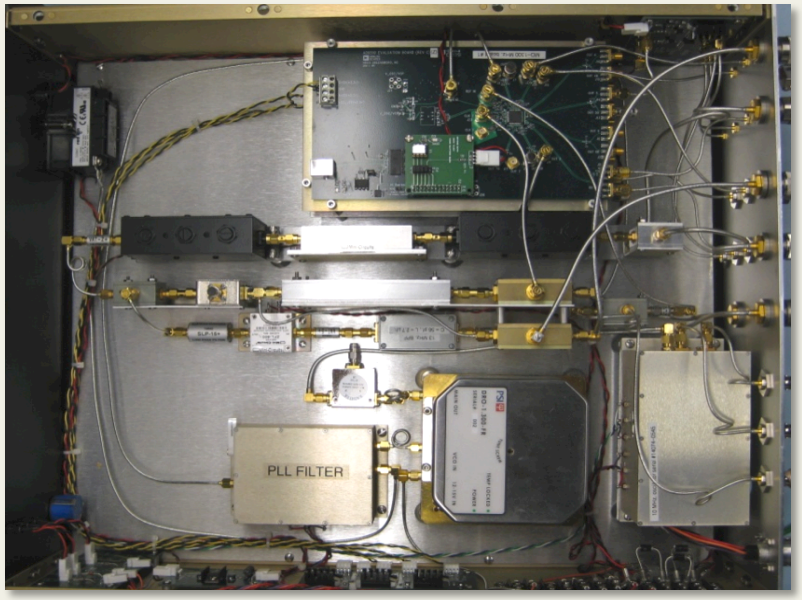

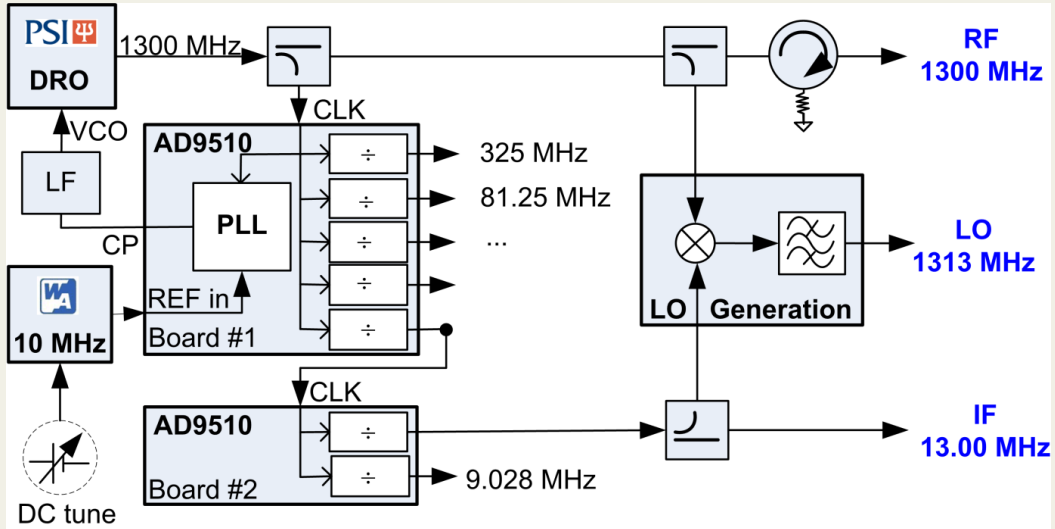

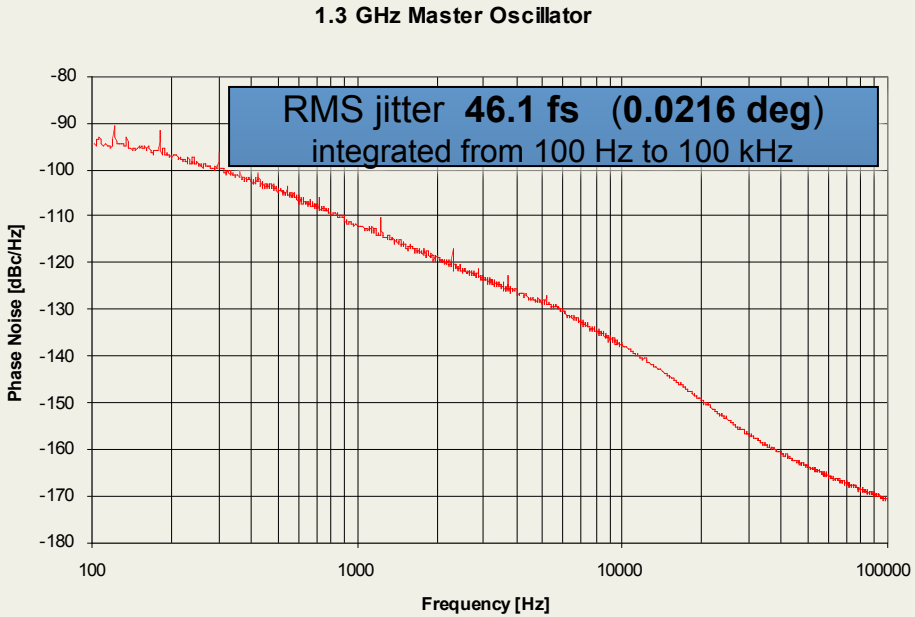

- RF, LO, IF
- Programmable outputs
- Timing reference
- 1.3 GHz
- <140 fs integrated jitter (1Hz–10MHz)

Phase Reference Distribution

Copper and fiber optics change electrical length with temperature and may be microphonic
This scheme subtracts out cable length from distributed phase reference points

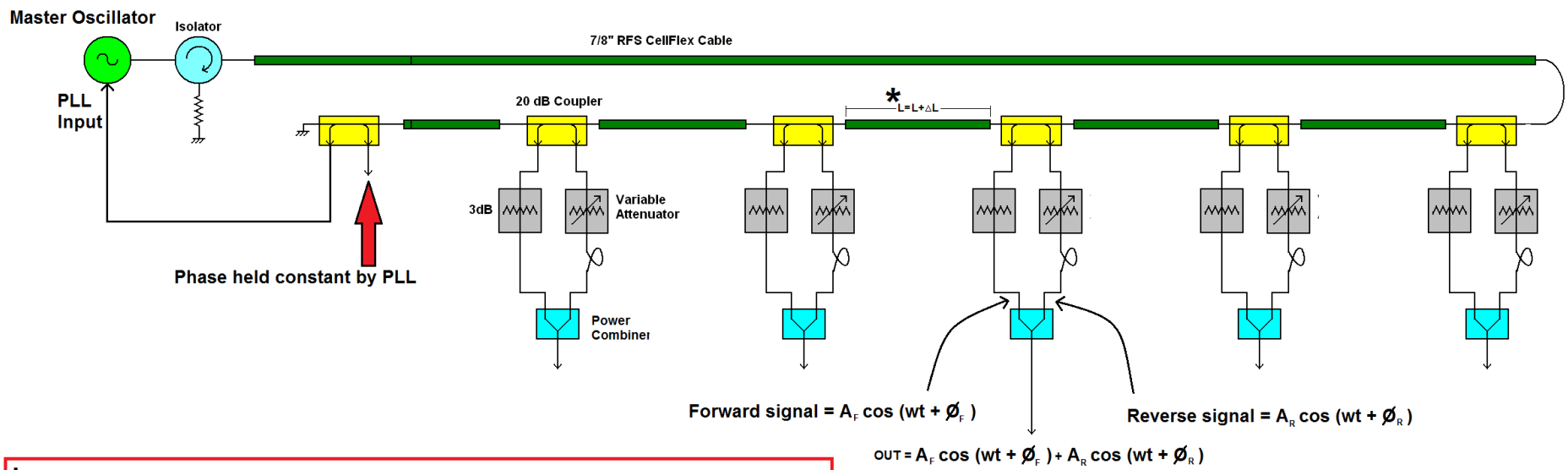

* changes in cables lengths between tap positions due to temperature changes ($L = L + \Delta L$)

the output becomes: OUT = $A_F \cos(wt + \phi_F + \Delta\phi_F) + A_R \cos(wt + \phi_R + \Delta\phi_R)$

When the phase at the shorted end of the reference line is held constant, $\Delta\phi_F = \Delta\phi_R$

When $\Delta\phi_F = \Delta\phi_R$,

$$A_F \cos(wt + \phi_F + \Delta\phi_F) + A_R \cos(wt + \phi_R + \Delta\phi_R) = A_F \cos(wt + \phi_F) + A_R \cos(wt + \phi_R)$$

References:
Josef Frisch, David Brown, Eugene Cisneros, "The NLC RF Phase and Timing Distribution System" May 2000

LLRF Data Flow Diagram

-LLRF systems produce large amounts of data
-One cryomodule outputs 13 MB/sec
-Data storage and retrieval is a real issue for large machines

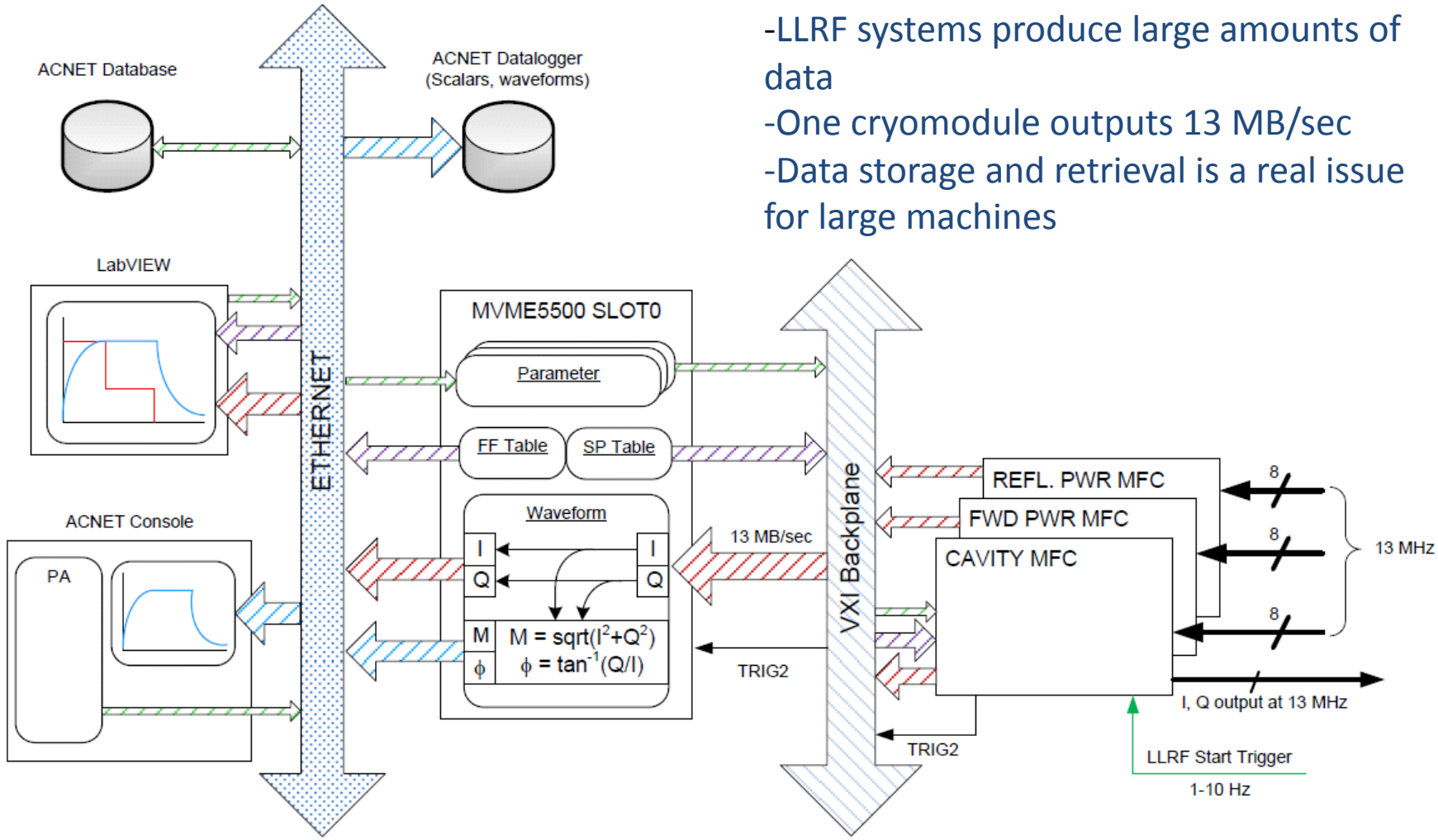

A Complete System

NML CM1 LLRF Racks

Receivers and Up-converter

VXI CPU &
3 R3MFC Controllers

Master Oscillator

Power Supplies

LLRF System Level Block Diagram

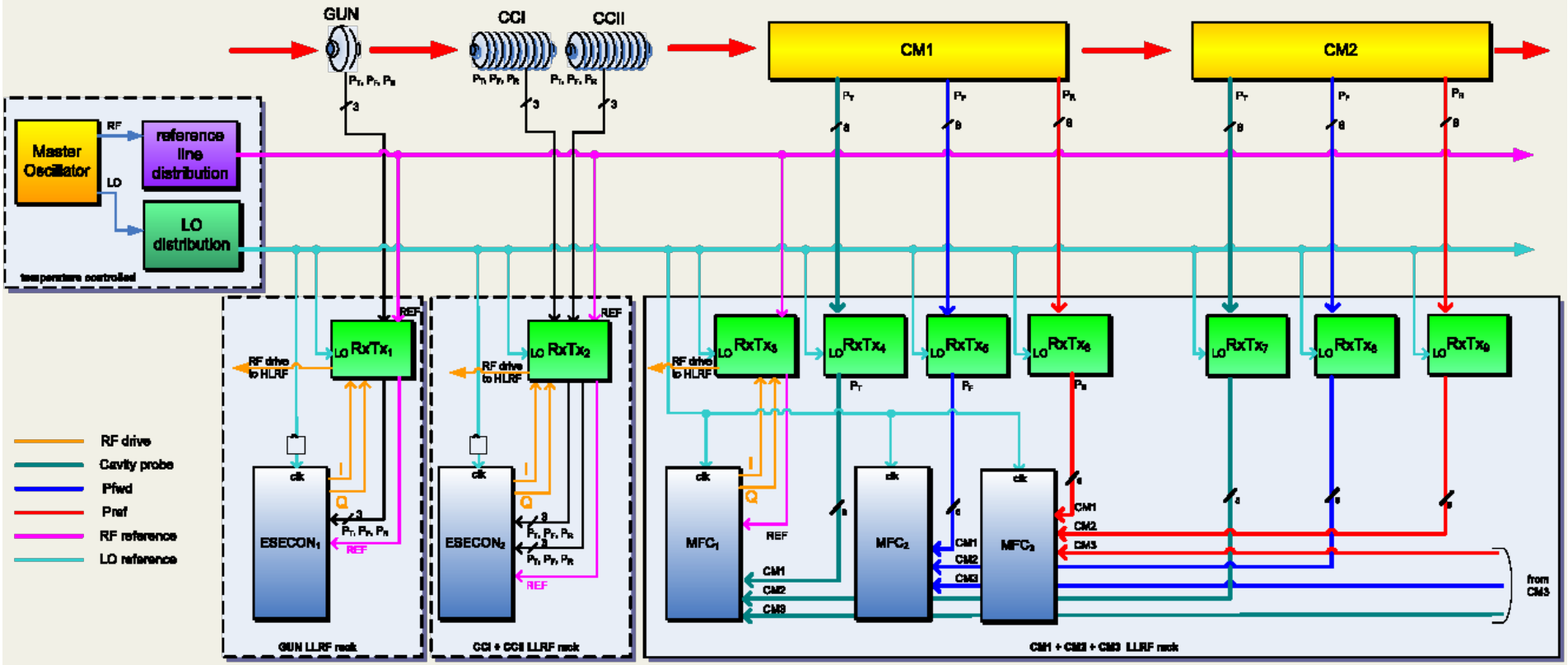

Fermilab