NEW MUON LAB
LCW COOLING SYSTEM

BY YURICK CZAJKOWSKI AND THOMAS ZUCHNIK OCTOBER 10, 2011

- MECHANICAL by Yurick Czajkowski
- CONTROLS by Thomas Zuchnik

NML LCW Mechanical

- Low Conductivity Water system is used to remove heat generated by equipment during experiments
- Water temperature delivered to equipment is 90°F ±1°F
- Maximum design flow is 1000 GPM
- Maximum water pressure generated by the pumps is 115 PSIG
- Water resistivity is set to 4 MΩ cm
- Dissolved oxygen level in water is 20-60 PPB

NML LCW Mechanical Major Equipment

- (2) Water Circulating Pumps 500 GPM each
- (1) Stand-by pump 500 GPM

NML LCW Mechanical Major Equipment

- 60% Water/40 % Propylene Glycol Chiller
- 180 Ton (633 kW) Nominal Capacity
- Water delivery 354GPM @ 63°F

NML LCW Mechanical Major Equipment

- LCW to Water/Glycol Heat Exchanger

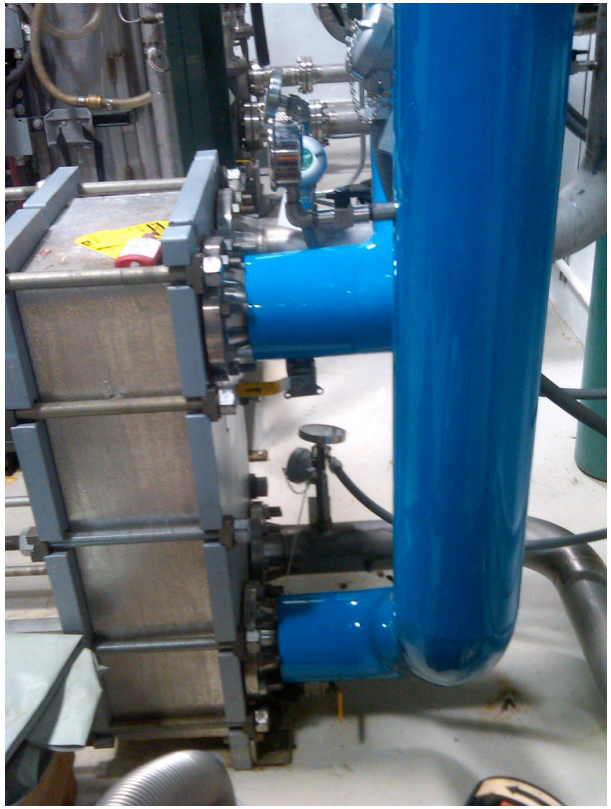

NML LCW Mechanical Major Equipment

- Dissolved Oxygen Removal Skid

NML LCW Mechanical Major Equipment

- Water Expansion Tank

NML LCW Mechanical Major Equipment

- RF Gun Cooling Skid
- Designed to control water temperature delivered to RF Gun within .05°C

NML LCW Mechanical Major Equipment

- High Energy Dump (Absorbers) Cooling Skid
- Low Energy Beam Line Cooling Skid

NML LCW Mechanical Major Equipment

- Variable Frequency Drives

NML LCW Mechanical Major Equipment

- Main Control Panel

NML LCW Mechanical Equipment

- DI Bottles
- LCW Filters (pre-filter .5 micron, after-filter 20 micron)
- LCW make-up system Filter (activated carbon 5 micron)
- Pressure Transducers
- Temperature Transmitters
- Flow Meters
- Resistivity Transmitters
- Dissolved Oxygen Transmitters
- Valves (electrically operated and manual)
- Water Level Transmitter

NML LCW Piping Diagram

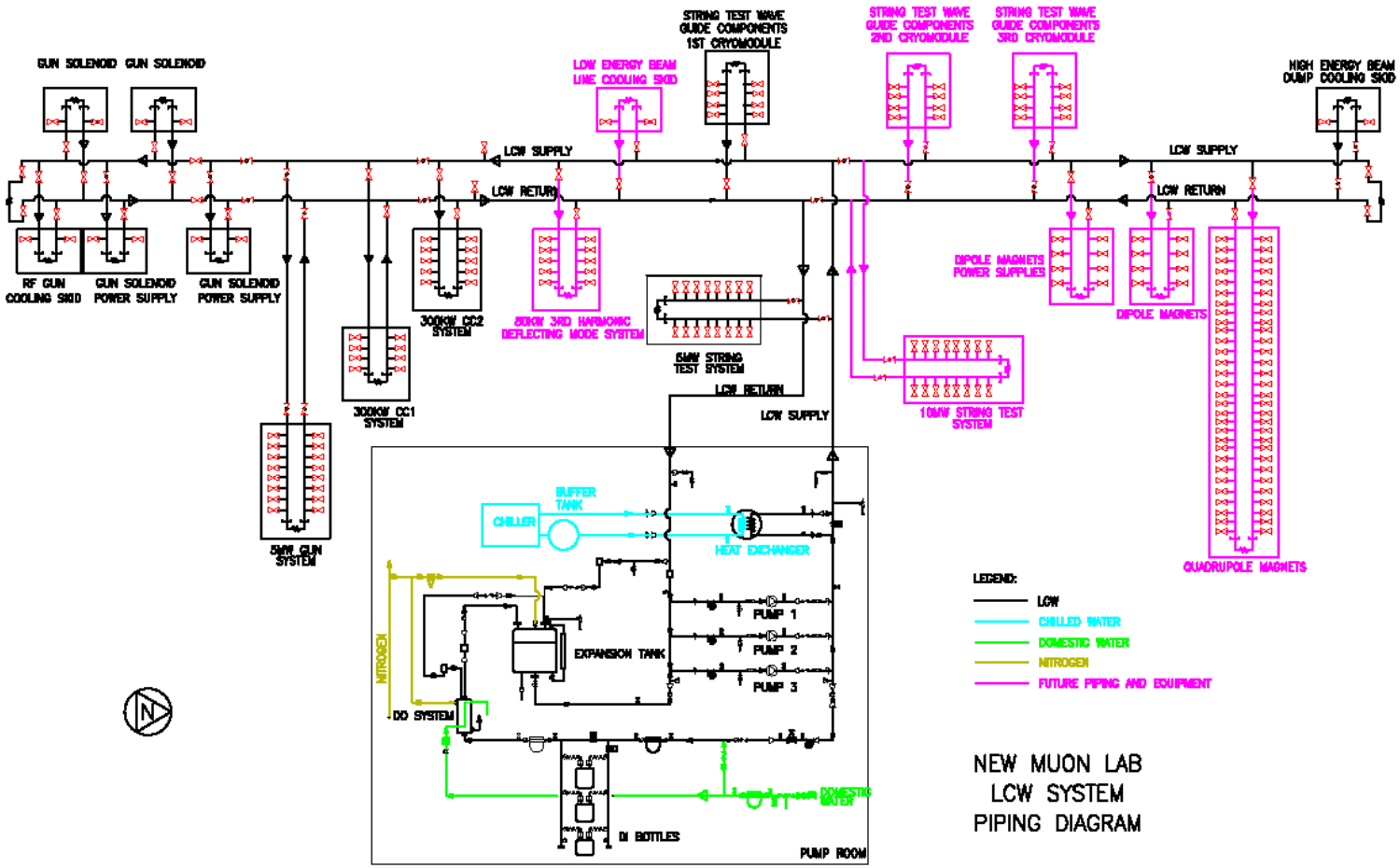

NML LCW ACNET Graphic Page

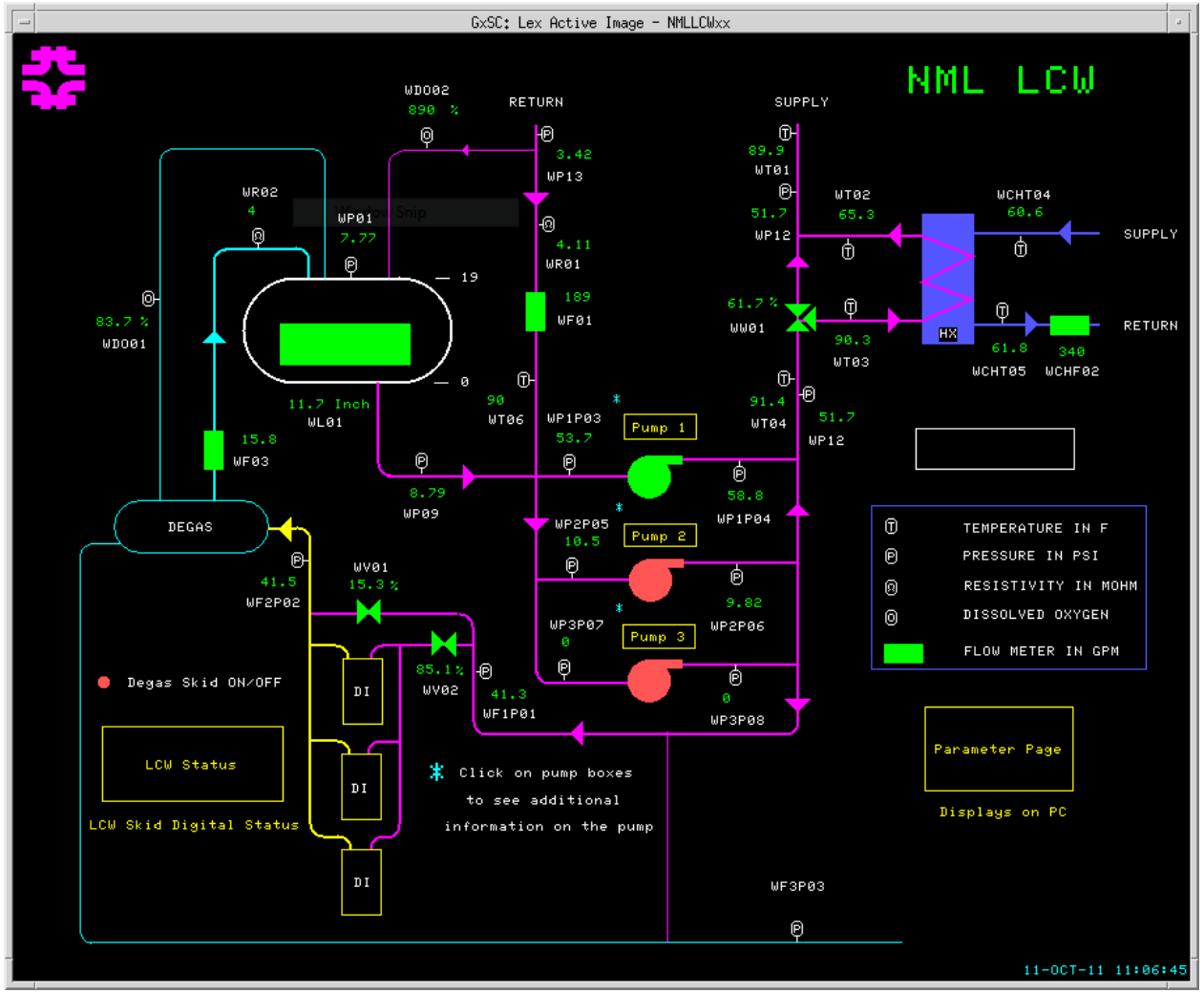

NML LCW Control

- Controls Hardware Overview
- System Schematic
  - PLC and Field I/O
- Areas of Control
  - Temperature
  - VFD
  - Deionization
- Trips
- Pump Interlocks
- Chiller

Controls Hardware Overview

- PLC's and I/O modules, Automation Direct
- Three, 8 slot bases, two wired to pumproom, one wired to chiller
- CPU slot 1, remaining slots any I/O module, A/D, D/A, discrete, comm
- Three serial ports, RS-232 for operator panel, RS-485 for chiller
- field wiring, interlock override switches, motor overtemp relays
- HMI, temp control, Ω, D.O. meter mounted in door.

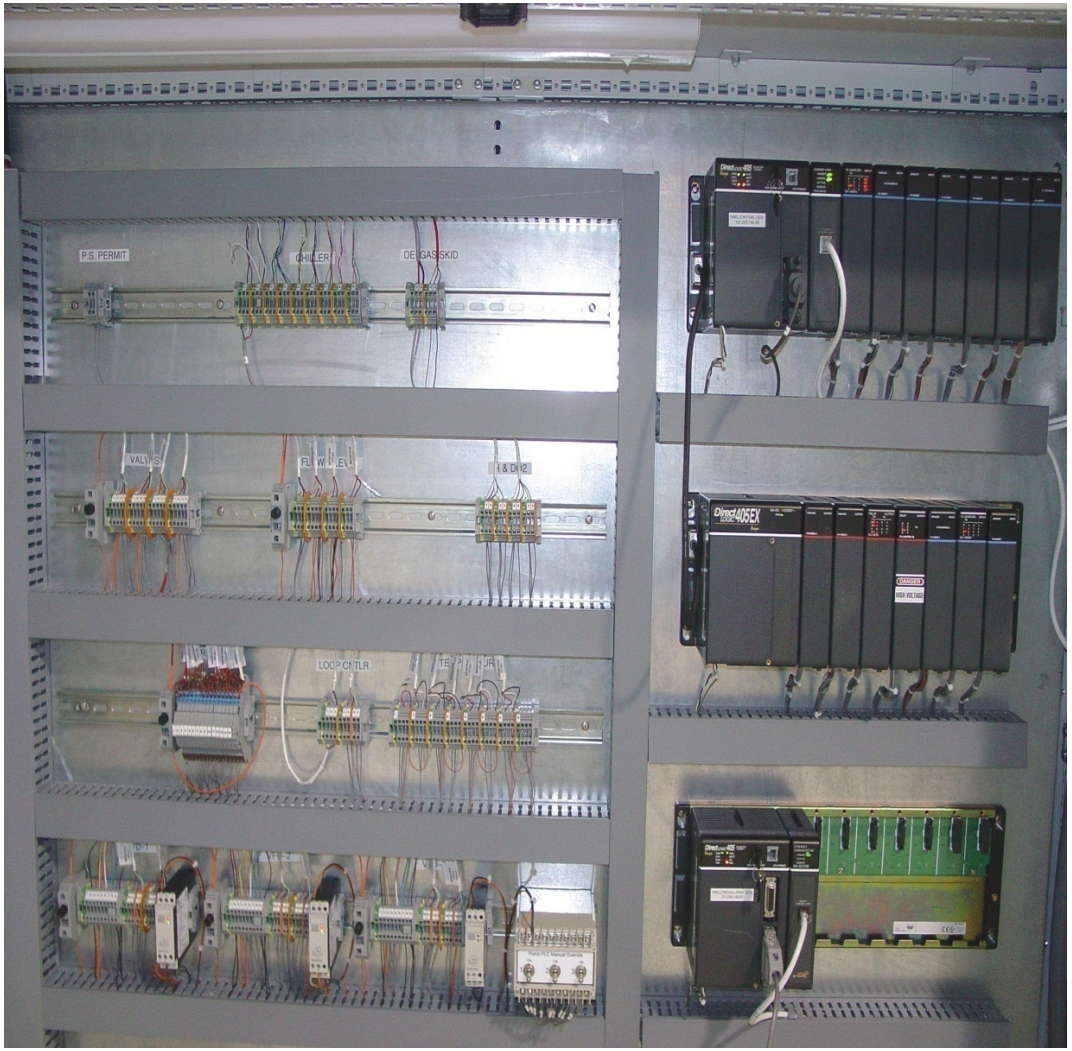

Controls Hardware Overview

- PLC's and I/O modules, Automation Direct
- Three, 8 slot bases, two wired to pumproom, one wired to chiller
- CPU slot 1, remaining slots any I/O module, A/D, D/A, discrete, comm
- Three serial ports, RS-232 for HMI, RS-485 for chiller
- Field wiring terminations, motor overtemp relays, interlock override switches.
- HMI, temp control, Ω, D.O. meter mounted in door.

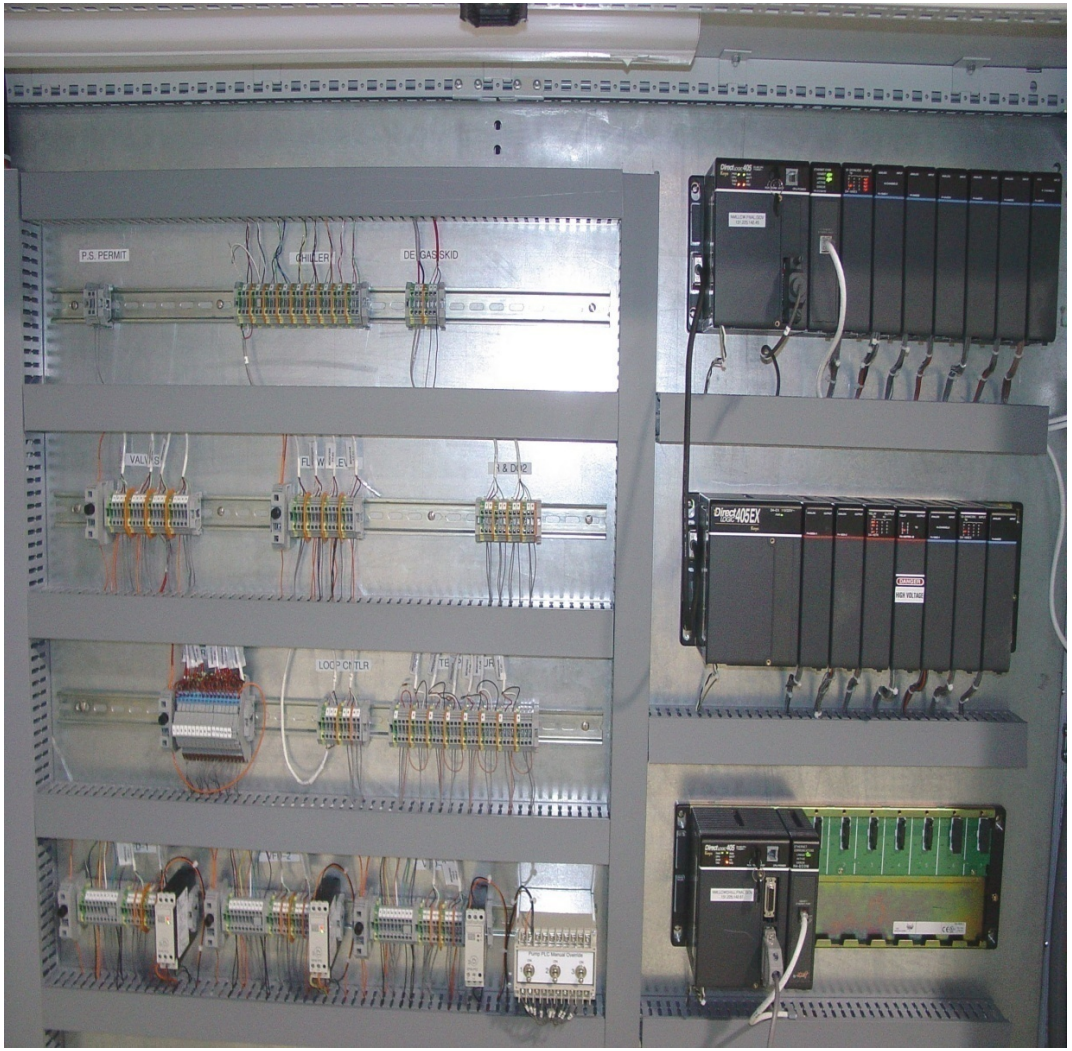

Controls Hardware Overview

- Operator Panel (HMI)

PanelMate series touchscreen Eaton Corp.

  - System status
  - Pump Control
  - Trip Reset
  - Trip Limits

- Moore 535 PID loop controller, LCW supply temperature regulation, SP and loop parameters programmable
- Thornton 770MAX Ω, D.O. analyzer, 4 channels, 4-20mA transmitter

System Schematic

PLC Address	Tag	PLC Discrete Memory Ref	Description	Type	Schematic Designator	PLC Module	Slot	Address	Range
			Inputs to PLC						
			Digital						
		X0	Pump 1 VFD Relay Contact 1 Local/~Remote Status	24vdc		D4-16NE3	1	0A	
		X1	Pump 1 VFD Relay Contact 2 Fault (will trip drive)	24vdc		D4-16NE3	1	1A	
		X2	Pump 2 VFD Relay Contact 1 Local/~Remote Status	24vdc		D4-16NE3	1	2A	
		X3	Pump 2 VFD Relay Contact 2 Fault	24vdc		D4-16NE3	1	3A	
		X4	Pump 3 VFD Relay Contact 1 Local/~Remote Status	24vdc		D4-16NE3	1	4A	
		X5	Pump 3 VFD Relay Contact 2 Fault	24vdc		D4-16NE3	1	5A	
		X14	Pump 1 Interlock Override On/~Off	24vdc		D4-16NE3	1	4B	
		X15	Pump 2 Interlock Override On/~Off	24vdc		D4-16NE3	1	5B	
		X16	Pump 3 Interlock Override On/~Off	24vdc		D4-16NE3	1	6B	
		X17	Degas Skid On/~Off Status	24vdc		D4-16NE3	1	7B	
		X220	Pump 1 Over Temperature Switch	24vdc		D4-16NE3	5A	0A	
		X221	Pump 2 Over Temperature Switch	24vdc		D4-16NE3	5A	1A	
		X222	Pump 3 Over Temperature Switch	24vdc		D4-16NE3	5A	2A	
		X223 - X237	spare	24vdc		D4-16NE3		3A	

			Inputs to PLC						
			Analog						
V13000	PT03	X20 - X33	Pump 1 Suction Pressure	4-20mA	PT03	F4-16AD1	2	1	0 - 200 psig
V13001	PT04		Pump 1 Discharge Pressure	4-20mA	PT04	F4-16AD1	2	2	0 - 200 psig
V13002	PT05		Pump 2 Suction Pressure	4-20mA	PT05	F4-16AD1	2	3	0 - 200 psig
V13003	PT06		Pump 2 Discharge Pressure	4-20mA	PT06	F4-16AD1	2	4	0 - 200 psig
V13004	PT07		Pump 3 Suction Pressure	4-20mA	PT07	F4-16AD1	2	5	0 - 200 psig
V13005	PT08		Pump 3 Discharge Pressure	4-20mA	PT08	F4-16AD1	2	6	0 - 200 psig
V13006	PT11		LCW Water Makeup Supply Pressure	4-20mA	PT11	F4-16AD1	2	7	0 - 200 psig
V13007	PT09		Expansion Tank Water Pressure	4-20mA	PT09	F4-16AD1	2	8	0 - 200 psig
V13010	PT01		Expansion Tank Nitrogen Pressure	4-20mA	PT01	F4-16AD1	2	9	0 - 200 psig
V13011	PT02		DI Bottle Downstream Pressure	4-20mA	PT02	F4-16AD1	2	10	0 - 200 psig
V13012	PT10		DI Bottle Upstream Pressure	4-20mA	PT10	F4-16AD1	2	11	0 - 200 psig
V13013	PT12		LCW Supply Pressure	4-20mA	PT12	F4-16AD1	2	12	0 - 200 psig
V13014	PT13		LCW Return Pressure	4-20mA	PT13	F4-16AD1	2	13	0 - 200 psig
V13015	PT14		LCW Cyro 1 Waveguide Supply Pressure	4-20mA	PT14	F4-16AD1	2	14	0 - 200 psig
V13016	PT15		LCW Cyro 1 Waveguide Return Pressure	4-20mA	PT15	F4-16AD1	2	15	0 - 200 psig
V13017			spare	4-20mA		F4-16AD1	2	16	

PLC Address	Tag	PLC Discrete Memory Ref	Description	Type	Schematic Designator	PLC Module	Slot	Address	Range
			Inputs to PLC						
			Analog						
V13020	RT01	X40 - X53	LCW Return Resistivity	4-20mA	RT01	F4-04ADS	3	CH1	5 ohms - 50 Mohms
V13021	RT02		LCW Supply Resistivity	4-20mA	RT02	F4-04ADS		CH2	5 ohms - 50 Mohms
V13022	DOS01		LCW Supply Dissolved Oxygen	4-20mA	DOS02	F4-04ADS		CH3	1 - 10,000 ppb
V13023	DOS02		LCW Return Dissolved Oxygen	4-20mA	DOS01	F4-04ADS		CH1	1 - 10,000 ppb
		X54 - X57	Channel Indicator Bits			F4-04ADS			
V13024	BTV01_ST	X60 - X73	Temperature Control Valve Position	4-20mA	BTV01	F4-04ADS	4	CH1	full CW - full CCW
V13025	FT01		LCW Return Flow Micronics	4-20mA	FT01	F4-04ADS		CH2	Programmable
V13026	BV02		DI Bottle Supply Valve Position	4-20mA	BV02	F4-04ADS		CH3	full CW - full CCW
V13027	BV01		DI Bottle Bypass Valve Position	4-20mA	BV01	F4-04ADS		CH4	full CW - full CCW
		X74 - X77	Channel Indicator Bits			F4-04ADS			
V13030	MOTOR1_	X100 - X113	Pump 1 Motor Speed VFD Analog Output 1	4-20mA		F4-04ADS	5	CH1	0 - MaxSpeed
V13031	MOTOR2_		Pump 2 Motor Speed VFD Analog Output 1	4-20mA		F4-04ADS		CH2	0 - MaxSpeed
V13032	MOTOR3_		Pump 3 Motor Speed VFD Analog Output 1	4-20mA		F4-04ADS		CH3	0 - MaxSpeed
V13033	TT01_535		LCW Supply Temperature	4-20mA		F4-04ADS		CH4	0 - 160 F
		X114 - X11	Channel Indicator Bits			F4-04ADS			
V13034	MOTOR1_	X120 - X13	Pump 1 Motor Current VFD Analog Output 2	+-10v		F4-04ADS	6	1	0 - 2xFLA amps
V13035	MOTOR2_		Pump 2 Motor Current VFD Analog Output 2	+-10v		F4-04ADS		2	0 - 2xFLA
V13036	MOTOR3_		Pump 3 Motor Current VFD Analog Output 2	+-10v		F4-04ADS		3	0 - 2xFLA
V13037			spare	+-10v		F4-04ADS		4	
		X134 - X13	Channel Indicator Bits			F4-04ADS			

PLC Address	Tag	PLC Discrete Memory Ref	Description	Type	Schematic Designator	PLC Module	Slot	Address	Range
			Inputs to PLC						
			Analog						
V2116	TT02	X140 - X157	Heat Exchanger LCW Discharge Temperature	RTD	TT02	F4-08RTD	7	2	0 - 500 DegF
V2117	TT03		Heat Exchanger LCW Supply Temperature	RTD	TT03	F4-08RTD	7	3	0 - 500 DegF
V2120	TT04		Heat Exchanger Chilled Water Supply Temperature	RTD	TT04	F4-08RTD	7	4	0 - 500 DegF
V2121	TT05		Heat Exchanger Chilled Water ReturnTemperature	RTD	TT05	F4-08RTD	7	5	0 - 500 DegF
V2122	TT06		LCW Return Temperature	RTD	TT06	F4-08RTD	7	6	0 - 500 DegF
V2123	TT07		Temperature Control Valve Inlet Temperature	RTD	TT07	F4-08RTD	7	7	0 - 500 DegF
		X160 - X162	Channel Indicator Bits			F4-08RTD	7		
		X170 - X177	Broken Transmitter Bits			F4-08RTD	7		
V13040	LT01	X200 - X213	Expansion Tank Level	4-20mA	LT01	F4-16AD1	4A	1	0 - 18 inches
V13041	FT02		Heat Exchanger Chilled Water Return Flow	4-20mA	FT02	F4-16AD1	4A	2	0 - 600 gpm
V13042	FT03		Expansion Tank Inlet Flow	4-20mA	FT03	F4-16AD1	4A	3	0 - 100 gpm
			spares			F4-16AD1	4A	4 to 16	
		X214 - X217	Channel Indicator Bits						
V13060		X240 - X253	Heat Exchanger Water Supply Valve Position	4-20mA	BTV02	F4-04ADS	6A	1	0 - 100% open
		X254 - X257	channel indicator bits.						

PLC Address	Tag	PLC Discrete Memory Ref	Description	Type		PLC Module		Address	Range
			Outputs from PLC						
			Digital						
	vfd1_enable	Y0	Pump 1 Interlock , VFD Enable	NO Relay		D4-16TR	2A	1	
	vfd1_fwd_enable	Y1	Pump 1 Remote On/~Off , VFD Forward Enable	NO Relay		D4-16TR	2A	2	
	vfd1_fault_rst	Y2	Pump 1 Fault RESET	NO Relay		D4-16TR	2A	3	
	vfd2_enable	Y3	Pump 2 Interlock ,VFD Enable	NO Relay		D4-16TR	2A	4	
	vfd2_fwd_enable	Y4	Pump 2 Remote On/~Off , VFD Forward Enable	NO Relay		D4-16TR	2A	5	
	vfd2_fault_rst	Y5	Pump 2 Fault RESET	NO Relay		D4-16TR	2A	6	
	vfd3_enable	Y6	Pump 3 Interlock ,VFD Enable	NO Relay		D4-16TR	2A	7	
	vfd3_fwd_enable	Y7	Pump 3 Remote On/~Off , VFD Forward Enable	NO Relay		D4-16TR	2A	8	
	vfd3_fault_rst	Y10	Pump 3 Fault RESET	NO Relay		D4-16TR	2A	9	
		Y11 - Y15	spare	NO Relay		D4-16TR	2A		
	o2_on_cntrl	Y62	O2 Removal Skid On/~Off	NO Relay		F4-08TRS2	3A	3	
		Y63 - 67	spare				3A		

PLC Address	Tag	PLC Discrete Memory Ref	Description	Type		PLC Module		Address
			Outputs from PLC					
			Analog					
		Y20 - Y33	Pump 1 Process Variable, VFD analog input 2	4-20mA		F4-08DA-1	0A	1
			Pump 2 Process Variable, VFD analog input 2	4-20mA		F4-08DA-1	0A	2
			Pump 3 Process Variable, VFD analog input 2	4-20mA		F4-08DA-1	0A	3
			DI Bottle Bypass Valve Control	4-20mA	BV01	F4-08DA-1	0A	4
			DI Bottle Supply Valve Control	4-20mA	BV02	F4-08DA-1	0A	5
			Heat Exchanger Water Valve Control	4-20mA	BTV02	F4-08DA-1	0A	6
			Temperature Control Valve Setpoint (to 535)	4-20mA	BTV01	F4-08DA-1	0A	7
			spare			F4-08DA-1	0A	8
		Y34 Y36	Channel Select Bits			F4-08DA-1	0A	
		Y37	Enable Bit			F4-08DA-1	0A	
		Y100 - Y113	Pump 1 Motor VFD Process Control Setpoint, Analog Input 1	0 -10v		F4-16DA-2	1A	CH1
			Pump 2 Motor VFD Process Control Setpoint Analog Input 1	0 -10v		F4-16DA-2	1A	CH2
			Pump 3 Motor VFD Process Control Setpoint Analog Input 1	0 -10v		F4-16DA-2	1A	CH3
			spare ch 4 - 8			F4-16DA-2	1A	CH4
		Y114 - Y116	Channel Select Bits Ch 1 - 8			F4-16DA-2	1A	
		Y117	Enable Bit			F4-16DA-2	1A	
		Y120 - Y133	spare ch 9 - 16			F4-16DA-2	1A	
		Y134 - Y136	Channel Select Bits Ch 9 - 16			F4-16DA-2	1A	
		Y137	Enable Bit			F4-16DA-2		

Temperature Control – LCW Supply Temperature

- Pump Room side: 2 valves and actuators. BTV1 parallel, BTV2 series, position control and feedback
- PLC side: Moore 535 PID controller to regulate BTV1
- SP – local from 535 front panel, or remote ACNET or HMI, range 0 – 160F
- PV – LCW Supply Temperature, direct from RTD, retransmitted as 4-20
- CV - 4-20mA out to BTV1
- BTV1 directly regulated, BTV2 PLC regulated, in response to BTV1

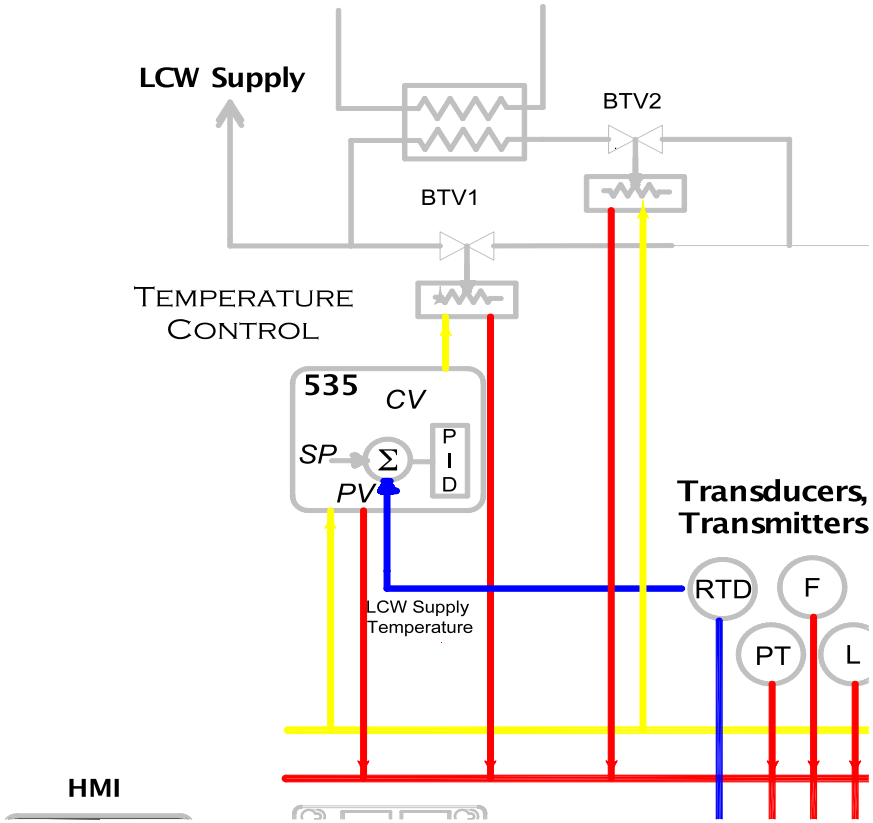

VFD Control

- Purpose to provide constant LCW Supply Pressure w/ varying load
- Three components: PLC – VFD – Pump Motor
- Control embedded in VFD as closed loop PID controller
- SP – pressure, from ACNET or HMI 4-20mA, 0 – 200 psi
- PV – LCW Supply Pressure retransmitted as 4-20mA
- PID calculation is input to V/F controller
- Loop parameters programmed from VFD front panel

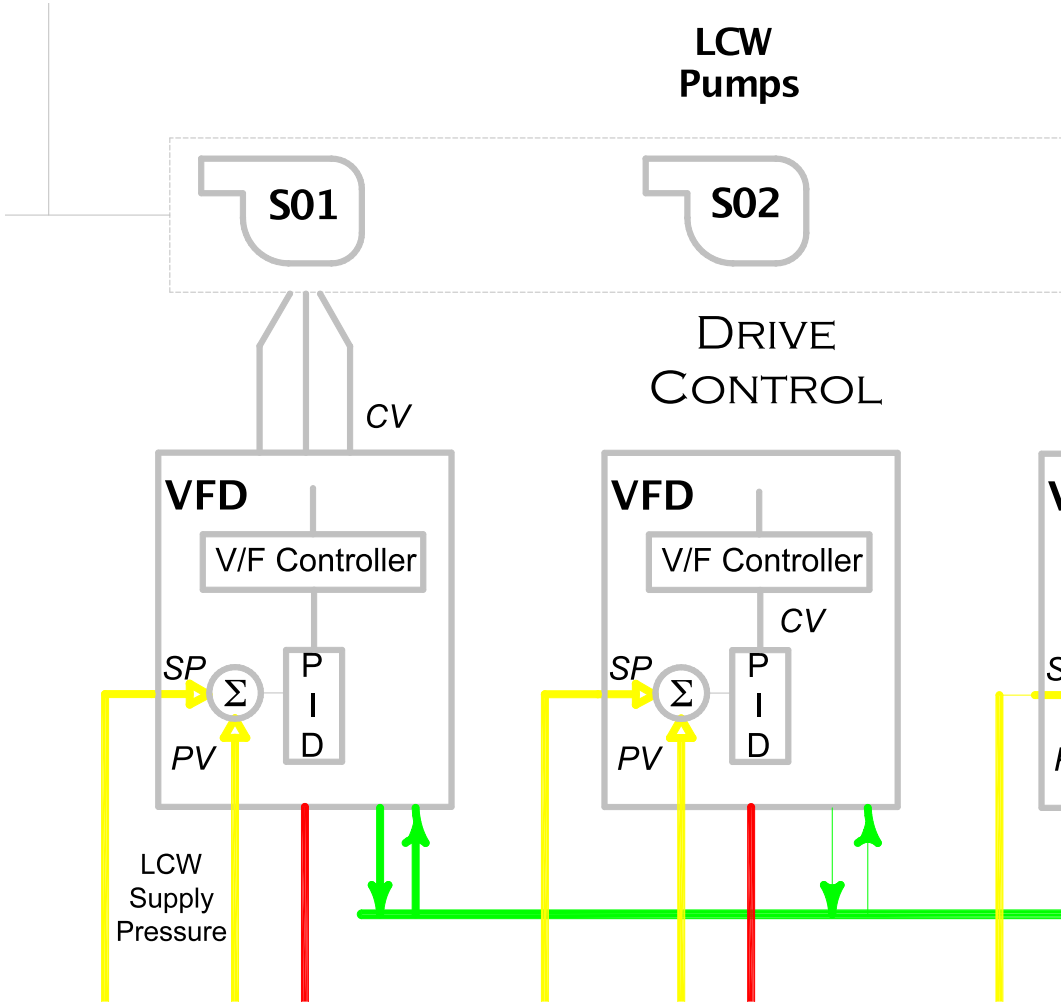

Deionization Control
LCW Supply Resistivity

- Pump room side – Two valves and actuators, position and feedback, supply and bypass lines
- PLC provides process control loop.
- SP - resistivity, programmed into PLC. 4MΩ
- PV - LCW Supply Resistivity, read by Thornton, transmitted to PLC
- CV - 4-20 mA to control BV1
- BV1 directly regulated, BV2 PLC regulated in response to BV1
- BV1 range 6% – 100%

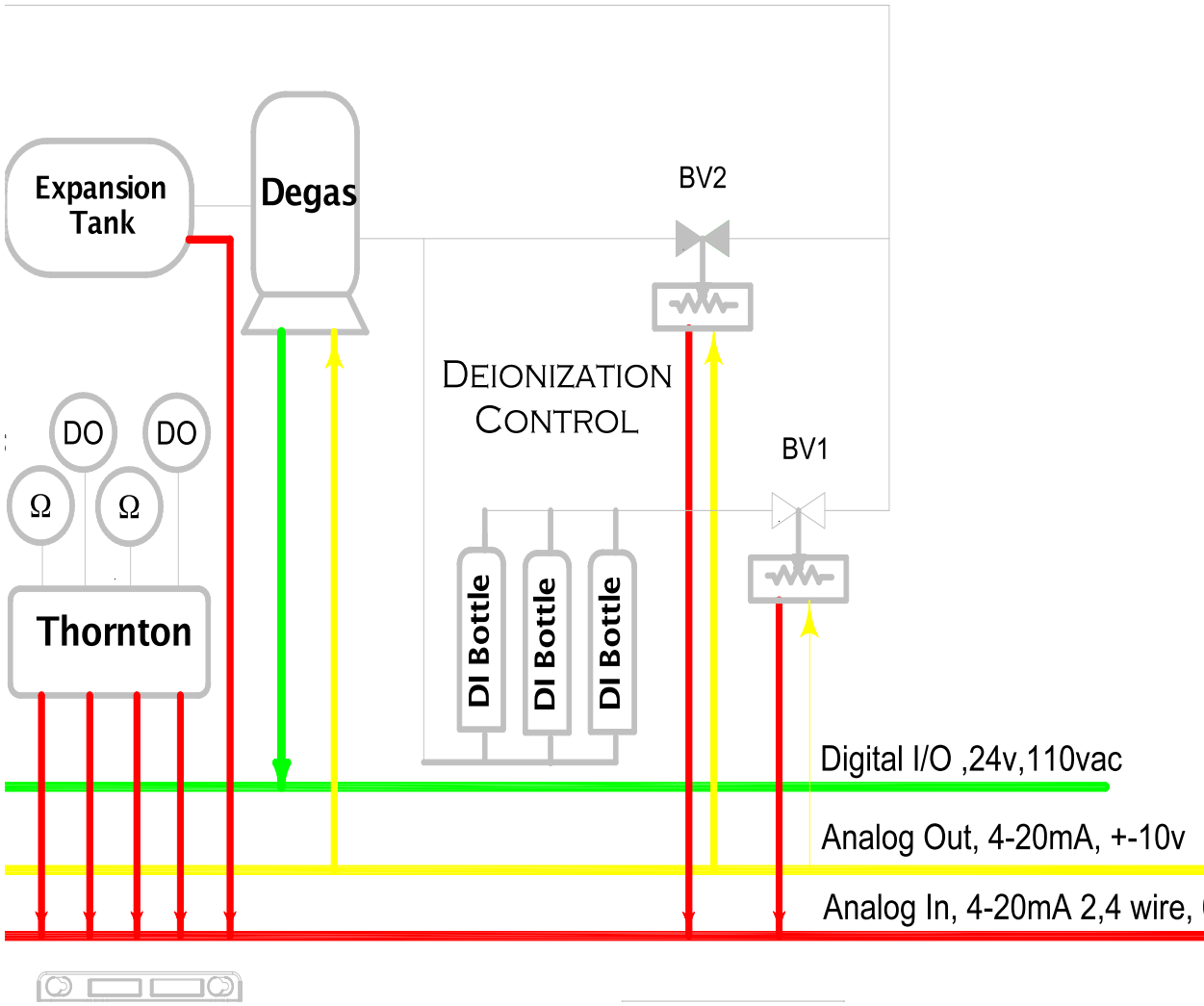

Trips/Alarms

- Upper / lower limits
- Trip delayed 15 sec after first motor start
- Alarms must be out of range > 15sec
- VFD generates internal faults that will trip the drive
- Thermistors attached to motor housing, wired to relays.
- All trips latched
- Trip limits settable

NML LCW Trips/Alarms

6-Oct-2011

Controlling Variable		Trip		Alarm	
		Limit	How Measured	Limit	How Measured
Supply Pressure PT12	LOW	45 psig	active after motor start delay		
	HIGH	110 psig			
Pump Suction Pressure PT03,05,07	LOW	0 psig			
Pump Discharge Pressure PT04,06,08	LOW	0 psig			
Return Flow FT01	LOW	10 gpm			
Supply Temp TT01	HIGH	98 F		95 F	active > 15 sec
	LOW	65 F		70 F	
Expansion Tank Level LT01	LOW	5 inches		10 inches	
	HIGH			16 inches	
ExpTank Nitrogen Pressure PT01	LOW			2 psig	
Return Temperature TT06	HIGH			100 F	
Supply Resistivity RT02	LOW			3 Meg	
Return Resistivity RT01	LOW			3 Meg	
VFD Fault		various	VFD Digital Status		
Motor Temperature	HIGH		Switch Closure		
PLC Critical Error	-				immediate
PLC Warning	-				immediate
PLC Comm Error	-				immediate

Pump Interlocks

- Pump drives interlocked through PLC
- Provides the enable to allow control
- Enable is made through the trip latches and status of other 2 pumps.

OR

- Override switch.
- Interlocks protect in local or remote.

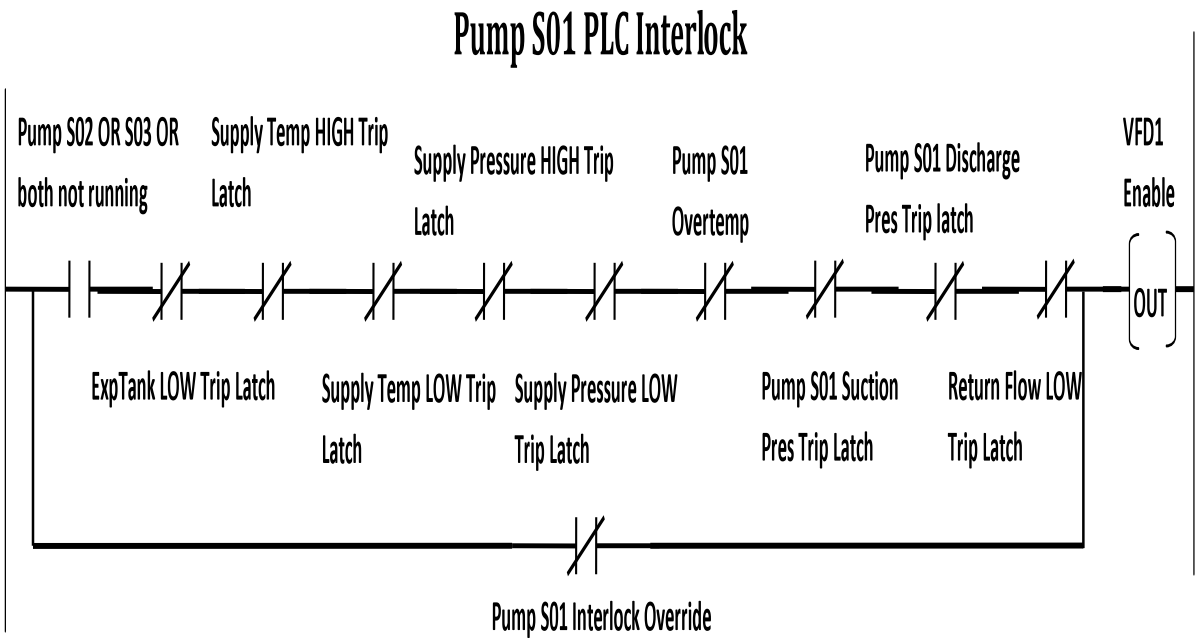

NML Chiller Unit

- Houses control electronics
- Mainboard and 3 peripheral boards
- 36 Points of I/O,analog, digital
- Mainboard equipped w/ RS-485 port, ½ duplex, wired to PLC speaking MODBUS® RTU.

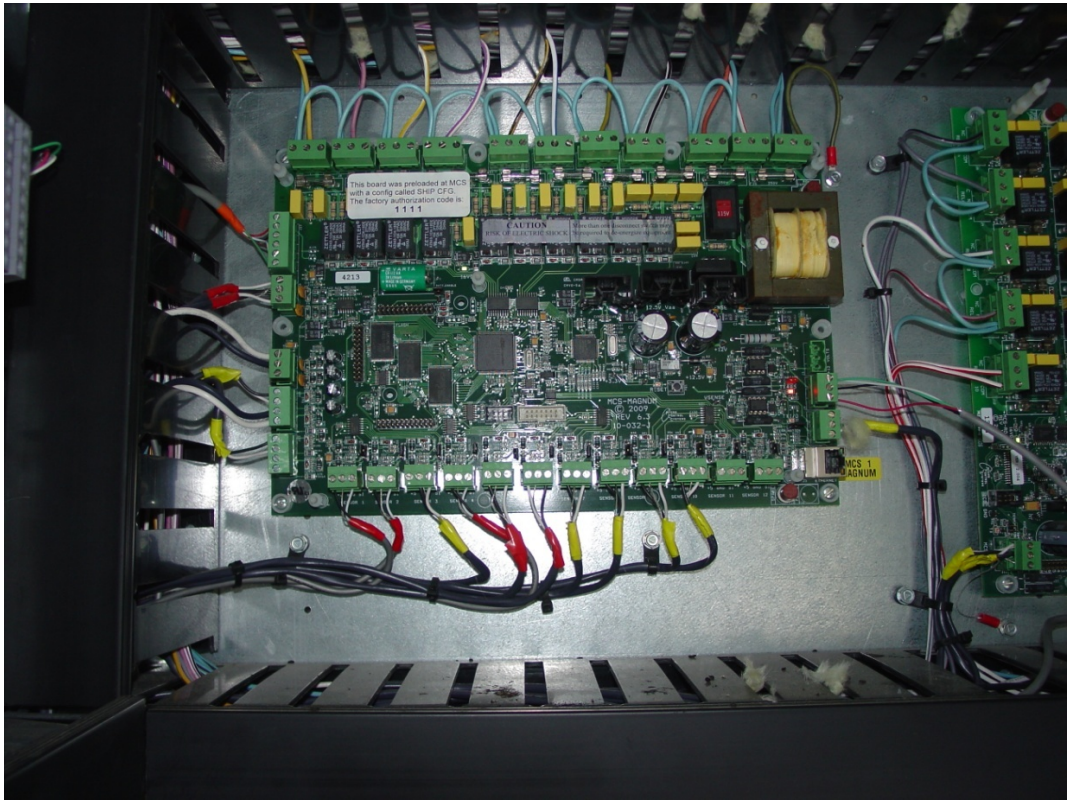

NML Chiller Unit

- Each I/O point mapped to 16 bit MODBUS register on mainboard.
- Each register read by PLC over RS-485 network
- Digital Status
  - Front panel switch status, 5 switches
  - VFD status
  - Water flow
- Analog Reads
  - Water temp in/out heat exchr
  - Ambient Temp
  - Compressor pressure, temperature, motor current

NML LCW CHILLER
NMLLCWCHILL
131.225.142.67
131.225.142.200
Mod ID 55
tjz
10/7/2011

Chiller Modbus Registers / MCS Magnum Processor Board
Registers are 16 bits. Analog values returned as decimal with one implied decimal point. Digital values are closed/on/true = 1

ACNET	MODBUS Register	Tag	PLC	Data	Description	Type
					Outputs to ACNET	
					Digital	
N:WCS01	30005		B2001.0	Bit	Condenser Fan VFD1 Fault/~OK	Bit-In
N:WCS02	30006		B2001.1	Bit	Condenser Fan VFD2 Fault/~OK	Bit-In
N:WCS03	30007		B2001.2	Bit	Compressor 1 & 5 Disabled/~OK	Bit-In
N:WCS04	30008		B2001.3	Bit	Compressor 2 & 6 Disabled/~OK	Bit-In
N:WCS05	30009		B2001.4	Bit	Compressor 3 & 7 Disabled/~OK	Bit-In
N:WCS06	30010		B2001.5	Bit	Compressor 4 & 8 Disabled/~OK	Bit-In
N:WCS07	30013		B2001.8	Bit	Run/~Stop Switch Run/~Stop	Bit-In
N:WCS08	30014		B2001.9	Bit	Water Flow Switch Flow/~NoFlow	Bit-In
					Analog	
N:WCT01	30001		V2100	Word	Water In Temperature degF	Analog In
N:WCT02	30002		V2101	Word	Water Out Temperature degF	Analog In
N:WCT03	30004		V2103	Word	Ambient Temperature degF	Analog In
N:WCP01	30017		V2104	Word	Compressor 1 & 5 Suction Line Pressure	Analog In
N:WCP02	30018		V2105	Word	Compressor 1 & 5 Discharge Line Pressure	Analog In
N:WCI01	30019		V2106	Word	Compressor 1 Current	Analog In
N:WCI02	30020		V2107	Word	Compressor 5 Current	Analog In
N:WCT04	30021		V2110	Word	Compressor 1 & 5 Suction Line Temperature	Analog In
N:WCT05	30022		V2111	Word	Compressor 1 & 5 Discharge Line Temperature	Analog In
N:WCP03	30025		V2114	Word	Compressor 2 & 6 Suction Line Pressure	Analog In
N:WCP04	30026		V2115	Word	Compressor 2 & 6 Discharge Line Pressure	Analog In
N:WCI03	30027		V2116	Word	Compressor 2 Current	Analog In
N:WCI04	30028		V2117	Word	Compressor 6 Current	Analog In
N:WCT06	30029		V2120	Word	Compressor 2 & 6 Suction Line Temperature	Analog In
N:WCT07	30030		V2121	Word	Compressor 2 & 6 Discharge Line Temperature	Analog In
N:WCP05	30033		V2124	Word	Compressor 3 & 7 Suction Line Pressure	Analog In
N:WCP06	30034		V2125	Word	Compressor 3 & 7 Discharge Line Pressure	Analog In
N:WCI05	30035		V2126	Word	Compressor 3 Current	Analog In
N:WCI06	30036		V2127	Word	Compressor 7 Current	Analog In
N:WCT08	30037		V2130	Word	Compressor 3 & 7 Suction Line Temperature	Analog In
N:WCT09	30038		V2131	Word	Compressor 3 & 7 Discharge Line Temperature	Analog In
N:WCP07	30041		V2134	Word	Compressor 4 & 8 Suction Line Pressure	Analog In
N:WCP08	30042		V2135	Word	Compressor 4 & 8 Discharge Line Pressure	Analog In
N:WCI07	30043		V2136	Word	Compressor 4 Current	Analog In
N:WCI08	30044		V2137	Word	Compressor 8 Current	Analog In
N:WCT10	30045		V2140	Word	Compressor 4 & 8 Suction Line Temperature	Analog In
N:WCT11	30046		V2141	Word	Compressor 4 & 8 Discharge Line Temperature	Analog In