# Pre-injector Upgrade Updates (07 Dec 2011 – 21 Dec 2011)

C.Y. Tan

21 Dec 2011

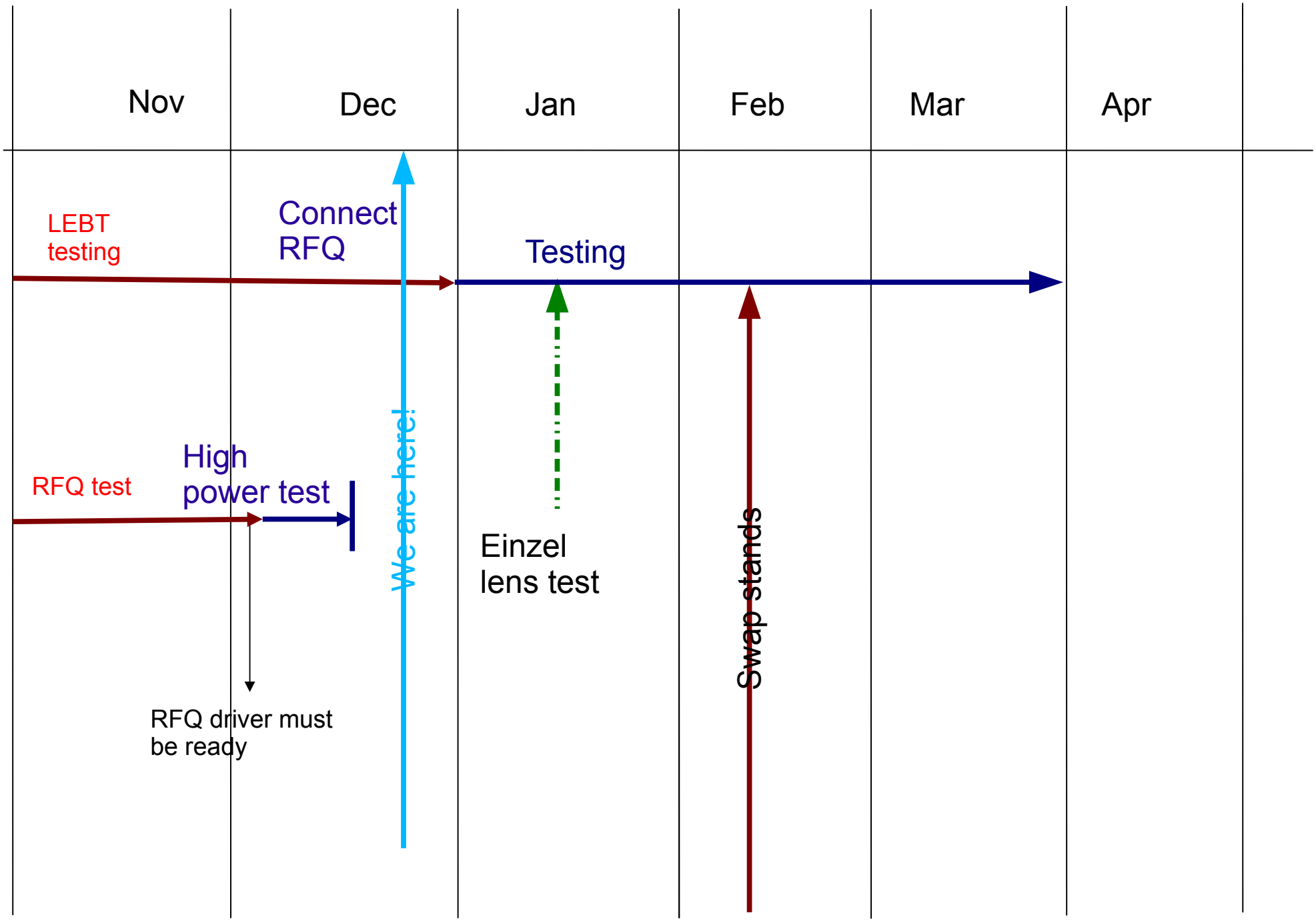
Nov
Dec
Jan
Feb
Mar
Apr
LEBT testing
Connect RFQ
Testing
We are here!
RFQ test
High power test
Einzel lens test
Swap stands
RFQ driver must be ready

| REV | DESCRIPTION | DRAWN | DATE |
|---|---|---|---|
| | | APPROVED | DATE |

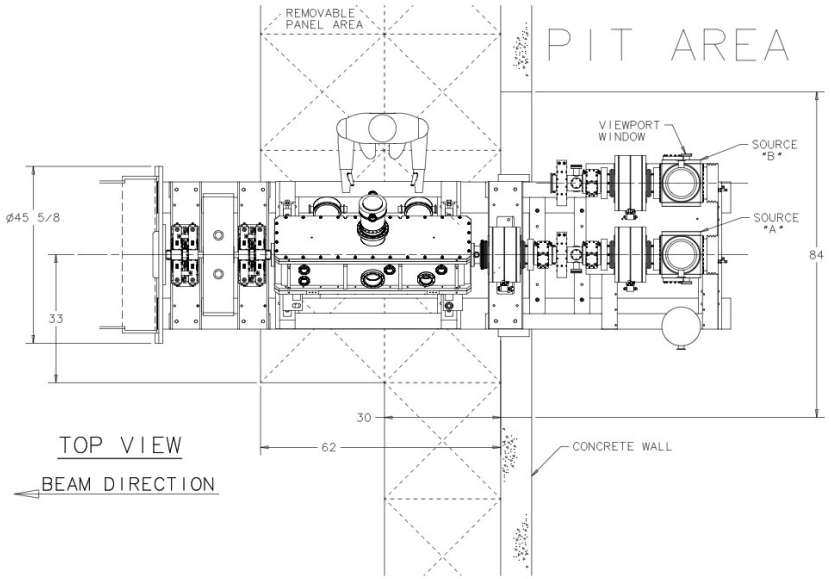


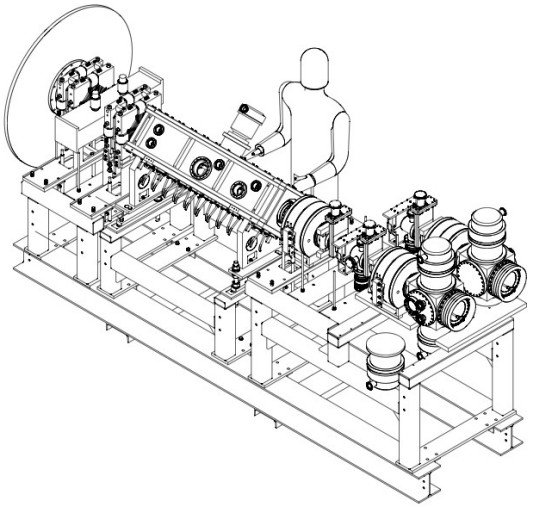

Really? Measured 47”

If we use 8” I beam, we will be >= 47.5” high

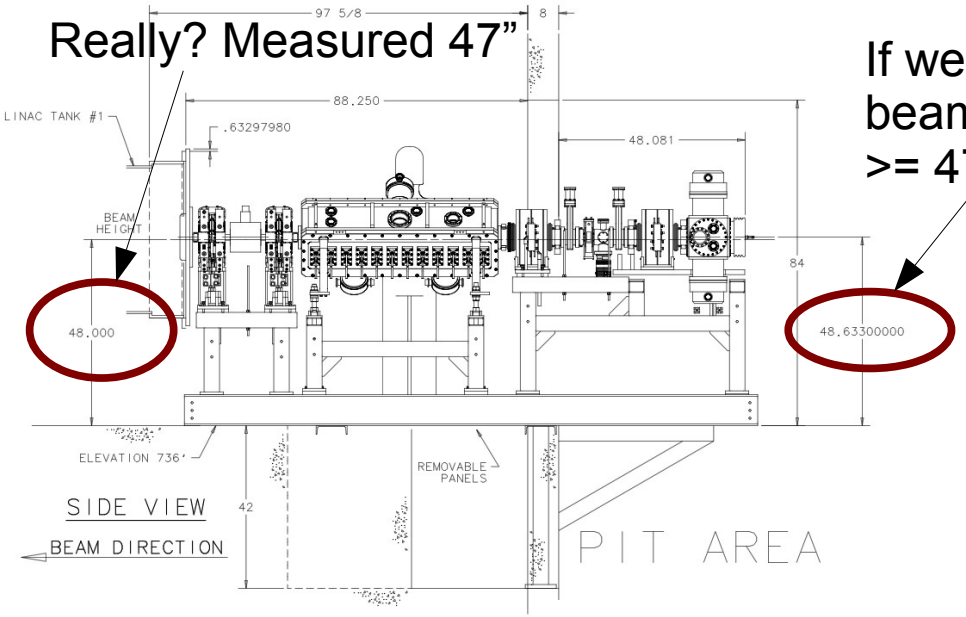


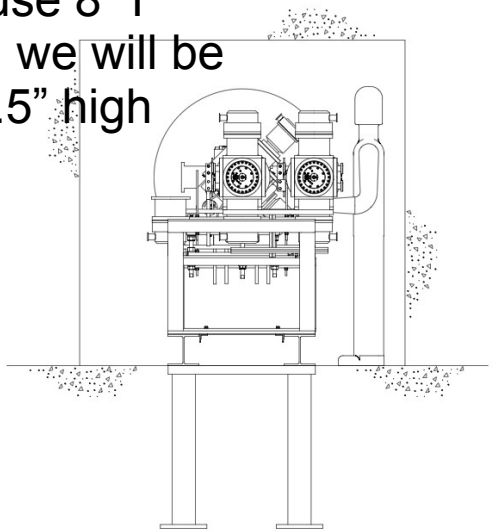

# PREACCELERATOR PRELIMINARY LAYOUT

APRIL 27, 2011

| UNLESS OTHERWISE SPECIFIED | ORIGINATOR | |
|---|---|---|
| ± ± ± | DRAWN | |
| | CHECKED | |
| 1. BREAK ALL SHARP EDGES .MAX. 2. DO NOT SCALE DRAWING. 3. DIMENSIONS BASED UPON ASME Y14.5M-1994 4. MAX. ALL MACH. SURFACES √ 5. DRAWING UNITS: U.S. INCH | APPROVED | |
| | USED ON | |
| | MATERIAL | |

FERMI NATIONAL ACCELERATOR LABORATORY
UNITED STATES DEPARTMENT OF ENERGY

| SCALE | DRAWING NUMBER | SHEET | REV |
|---|---|---|---|
| | . — — | 1 OF 1 | |

CREATED WITH : GROUP :

Created: 10:31:09 on 28-06-11 (D-M-Y) By: mkielar State: 1-INITIAL

# Latest

- RFQ pulsing at 15 Hz, 110 kW forward power, 3 kW reflected. (08 Dec)
- Survey performed (19 Dec). Solenoid 2 tilted towards the floor
  - Corrected.
- LEBT correctors, solenoid measurements continue.

# Source Status

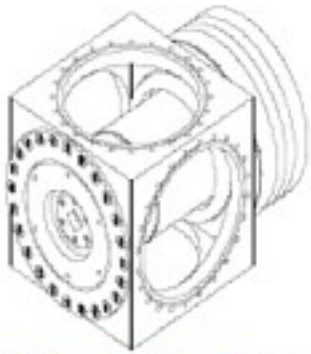

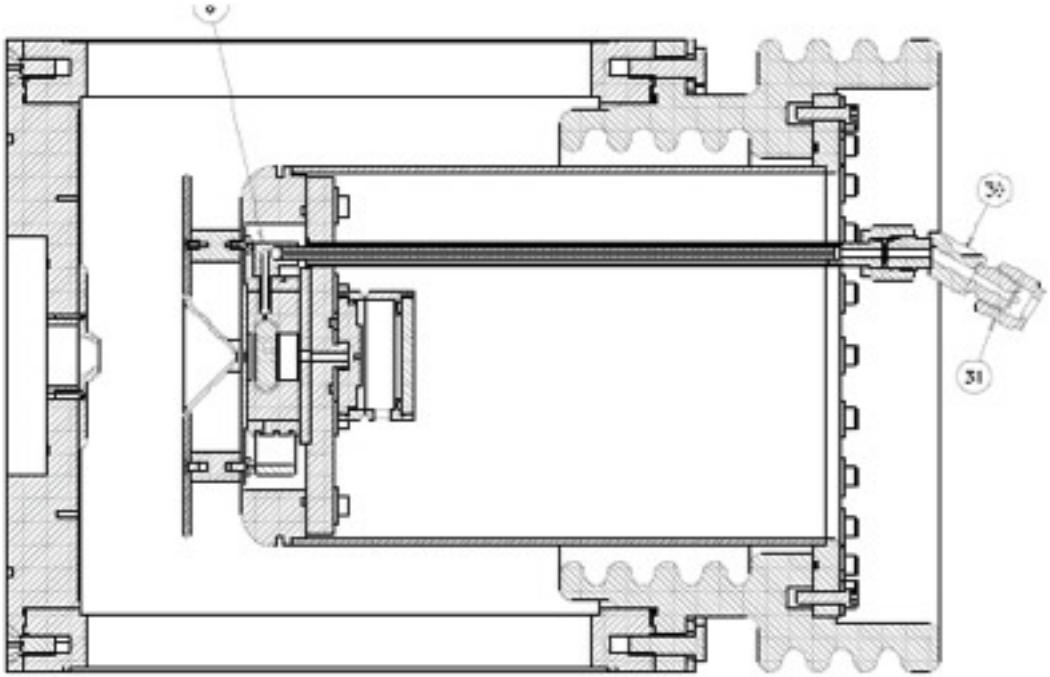

| Device | Status | Comments |
|---|---|---|
| Source | Tuning continues … | |

# LEBT Status

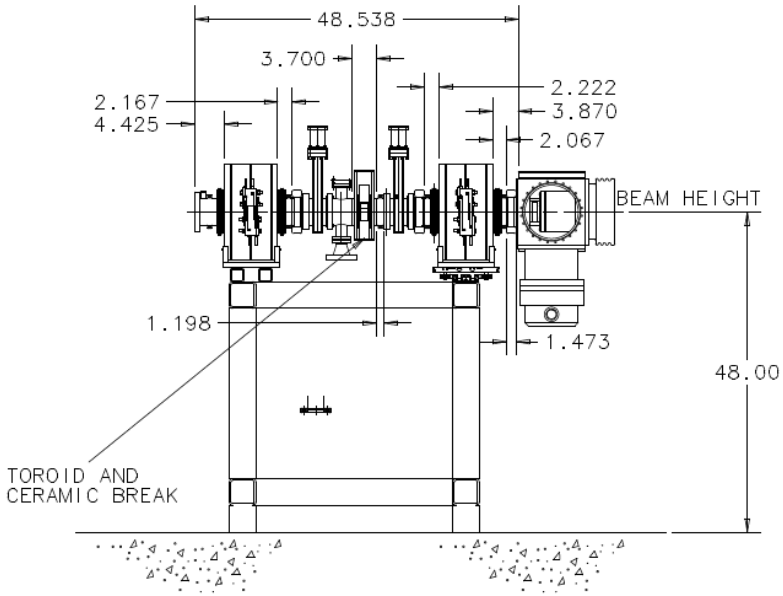


| Device | Status | Comments |
|---|---|---|
| New slide | being designed | Expect to have by end of Feb 2012 |
| Scroll pump | Replaced source rotary with scroll | 12/13/11 |
| Chopper box | Waiting for final approval | |
| Solid state switches | Received | 12/09/2011. DTI reps visited on 14 Dec |

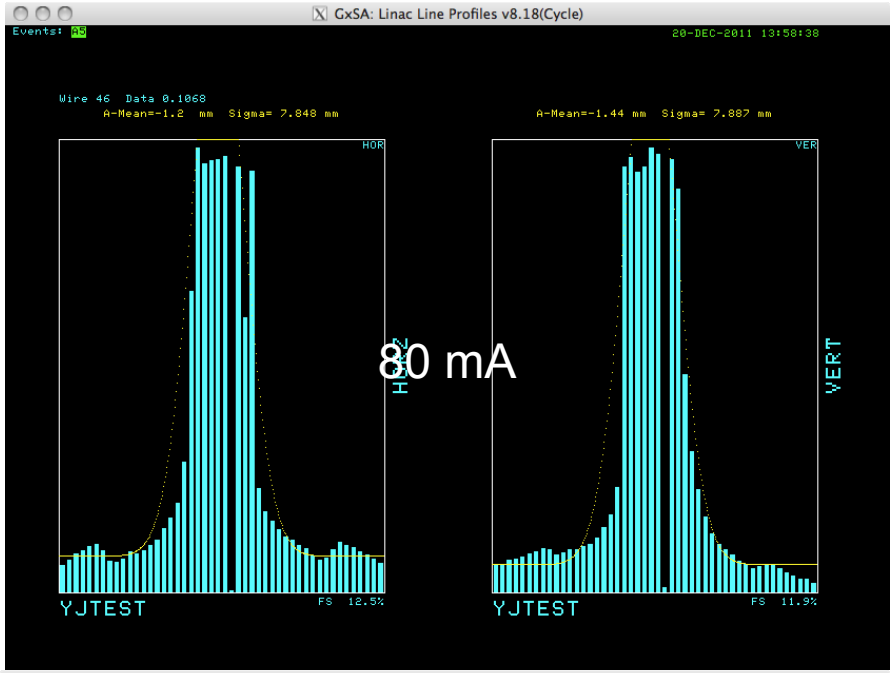


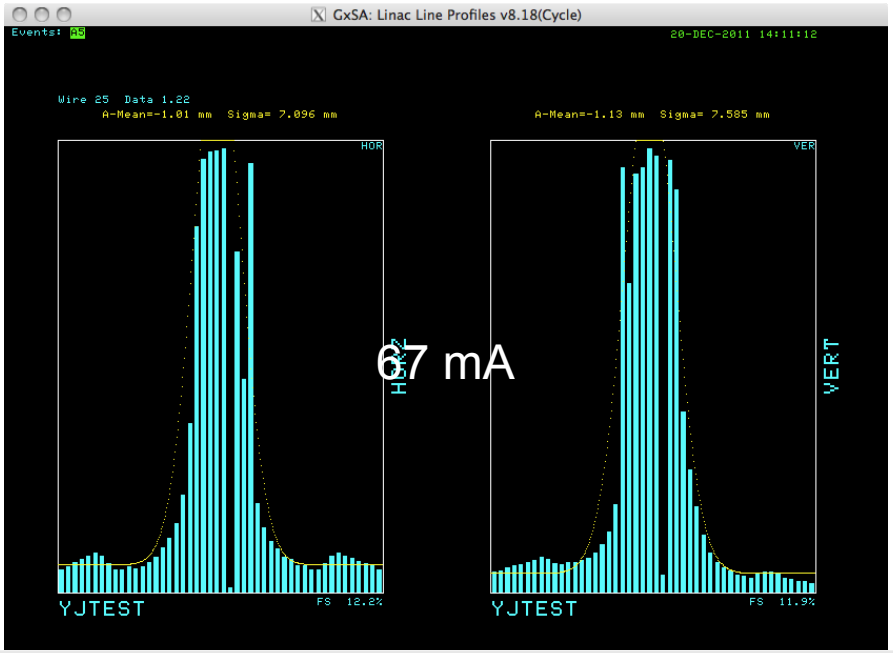


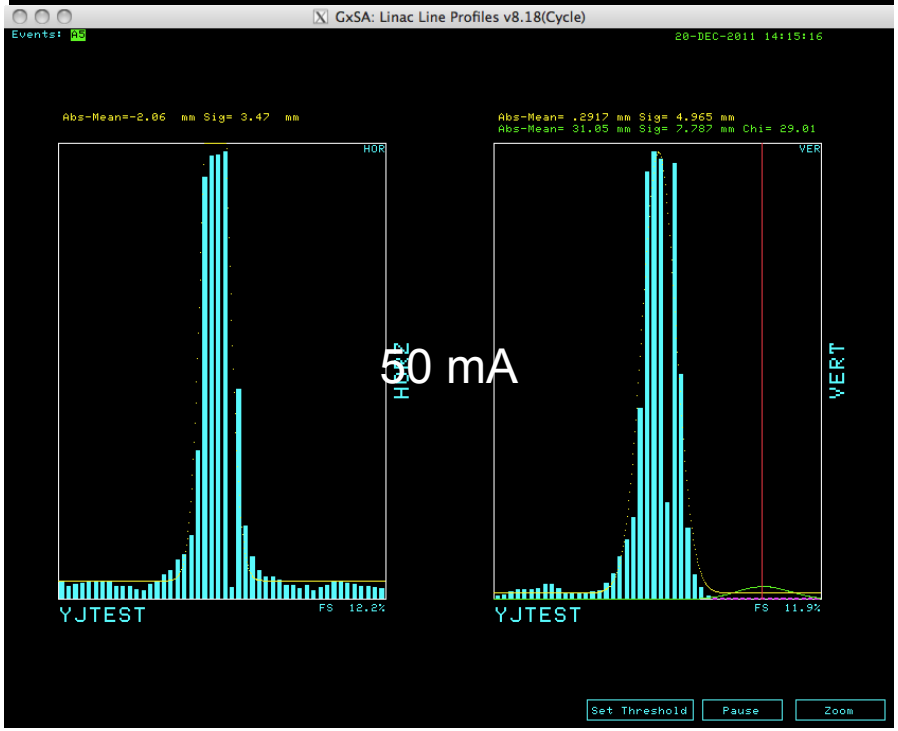


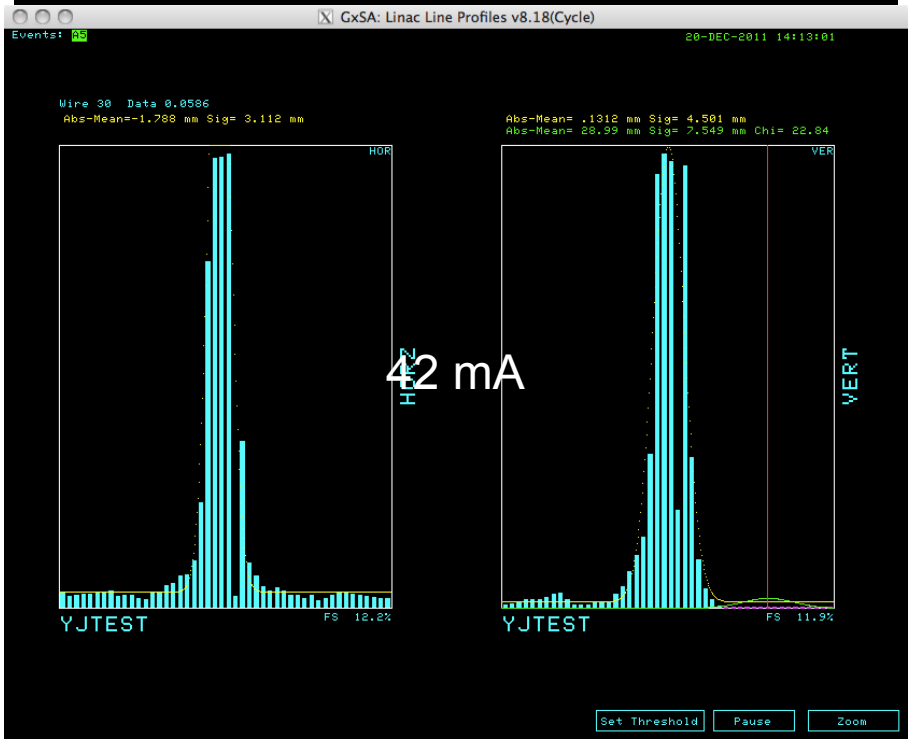


To fit into 1 cm RFQ hole, ~50 mA.

# Centring Beam onto Solenoid 2 axis

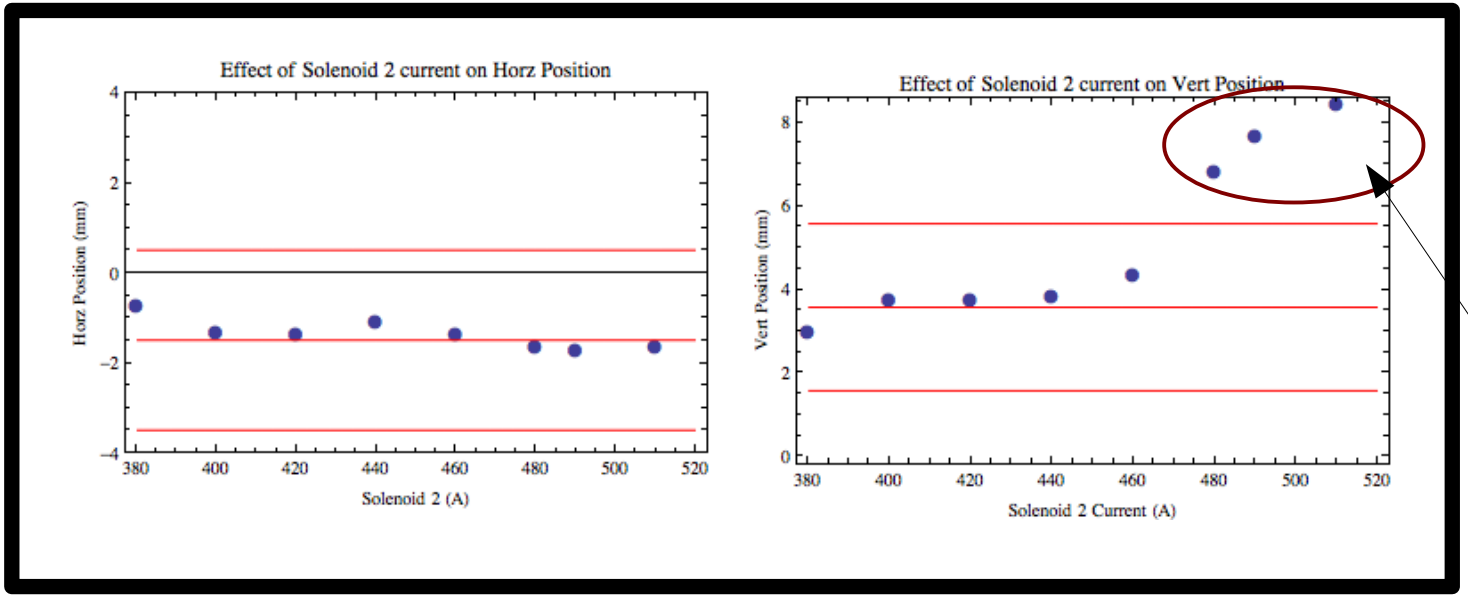


Bad data

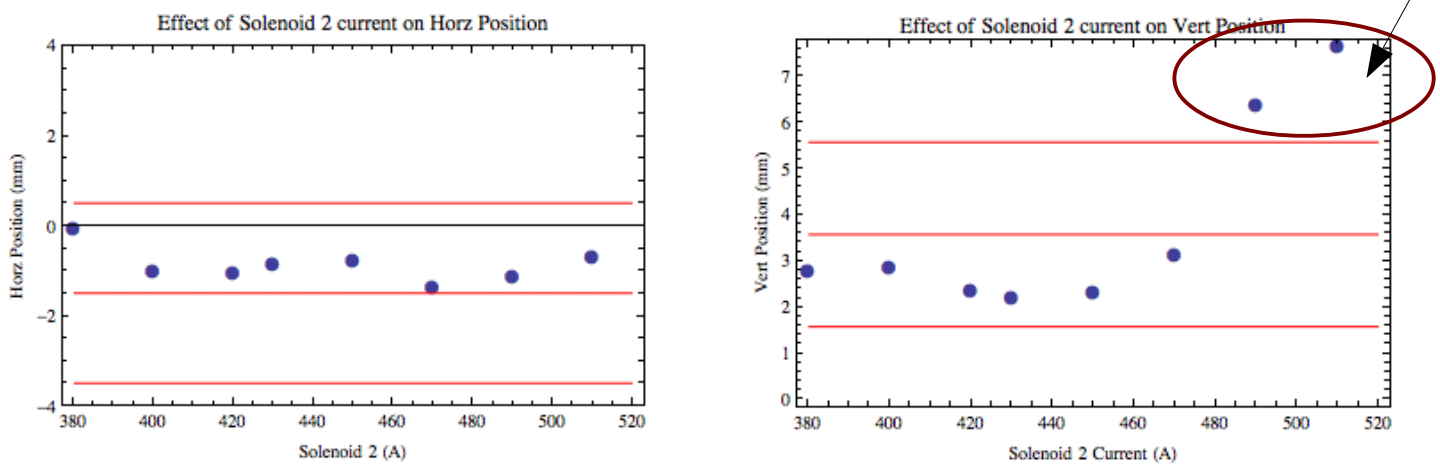

# MEBT Status

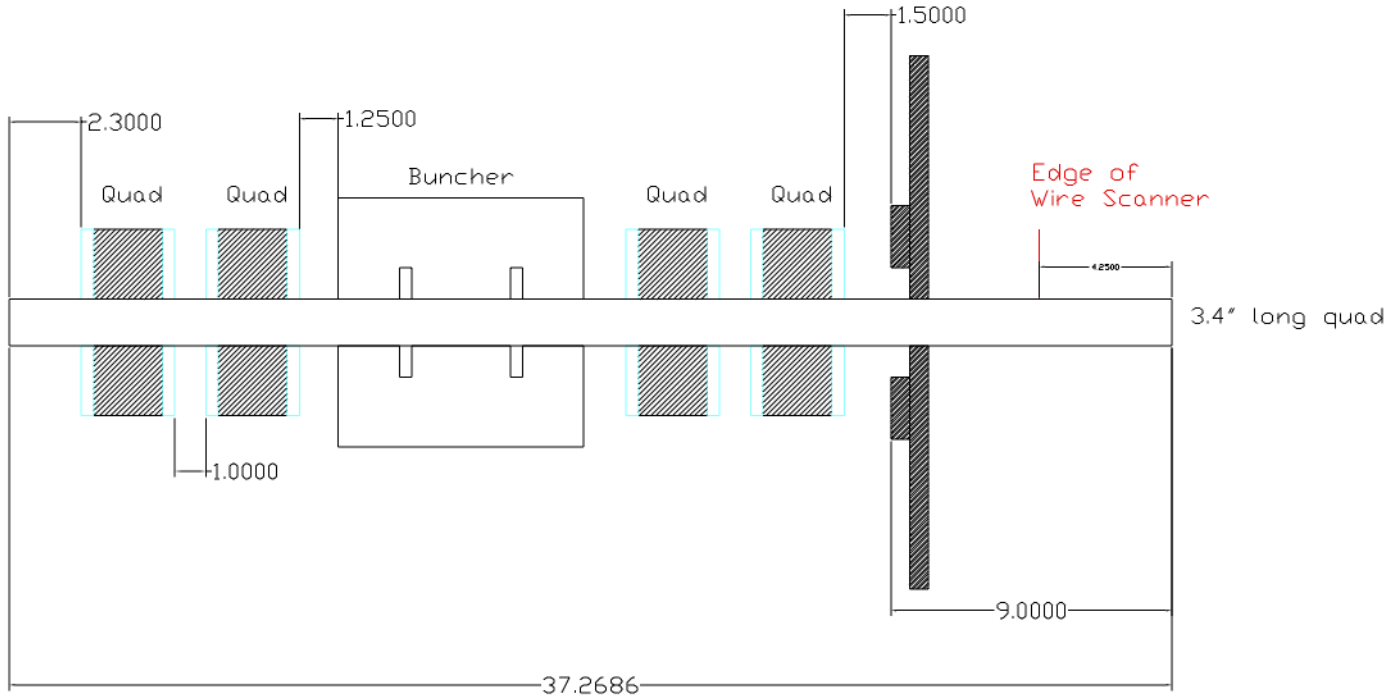


| Device | Status | Comments |
|---|---|---|
| MEBT Stand | Being designed | |
| Quad doublets | Being paired and tested | 1st pair downstream yaw (0.56 deg) a little large |

Are we buying PA for buncher?
Ion pump, controller gauging status?

# PSQA_3_4 Alignment: QUPQDN Axes relative to QupQdnAve

## Initial Alignment before Adjustments

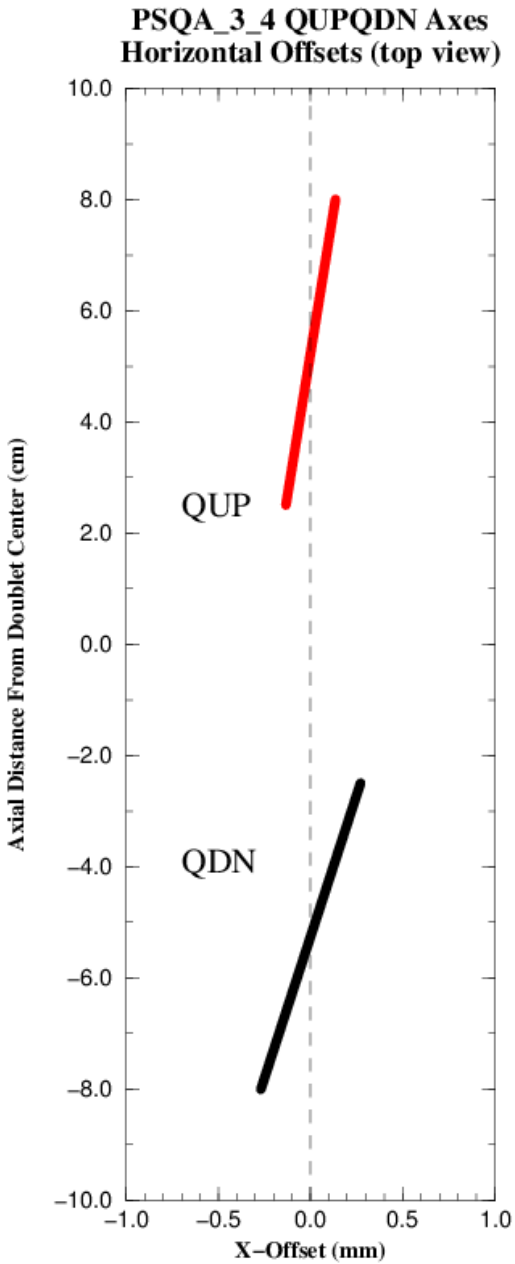


QUP Far End : x= 0.135, y= –0.140
QUP Com End: x= –0.135, y= 0.140
QDN Com End: x= 0.271, y= –0.139
QDN Far End : x= –0.271, y= 0.139

QUP Ave. X = 0.000 mm
QUP Ave. Y = 0.000 mm
QUP Yaw = –4.91 mrad
QUP Pitch= 5.09 mrad

QDN Ave. X = 0.000 mm
QDN Ave. Y = 0.000 mm
QDN Yaw = –9.85 mrad
QDN Pitch= 5.05 mrad

rollQUP = –0.86 mrad
rollQDN = –2.28 mrad
QUPQDN deltaRoll = 1.42 mrad

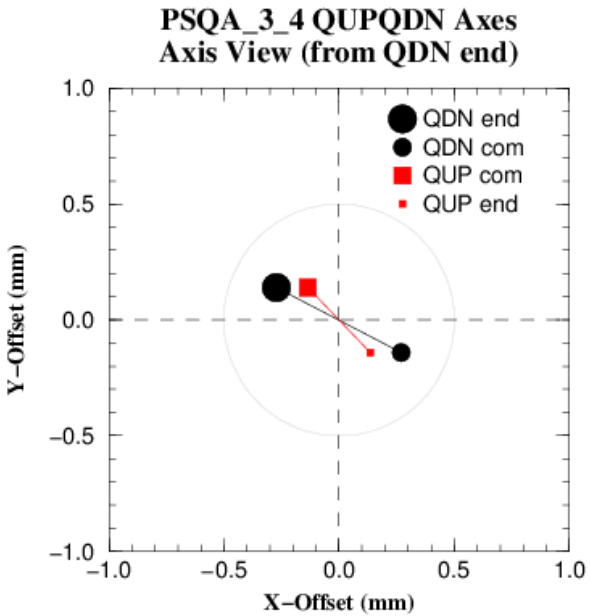


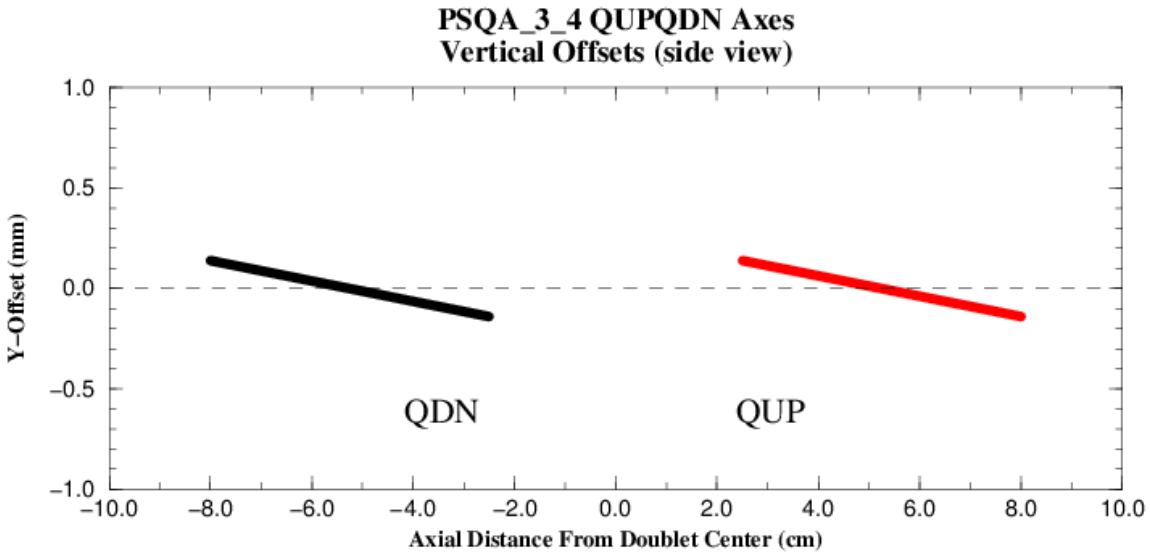


/usr/analysis/PSQA PSQA003–0/special/SSW/111208_15:42.xCen_doublet PSQA004–0/special/SSW/111209_13:53.xyCen_doublet_repeat/111209_14:04.xyCen_doublet
PSQA003–0/special/SSW/111209_08:49.roll_doublet PSQA004–0/special/SSW/111209_15:17.roll_doublet
**Tue Dec 13 10:09:28 CST 2011**

# MOSFET switches and controller

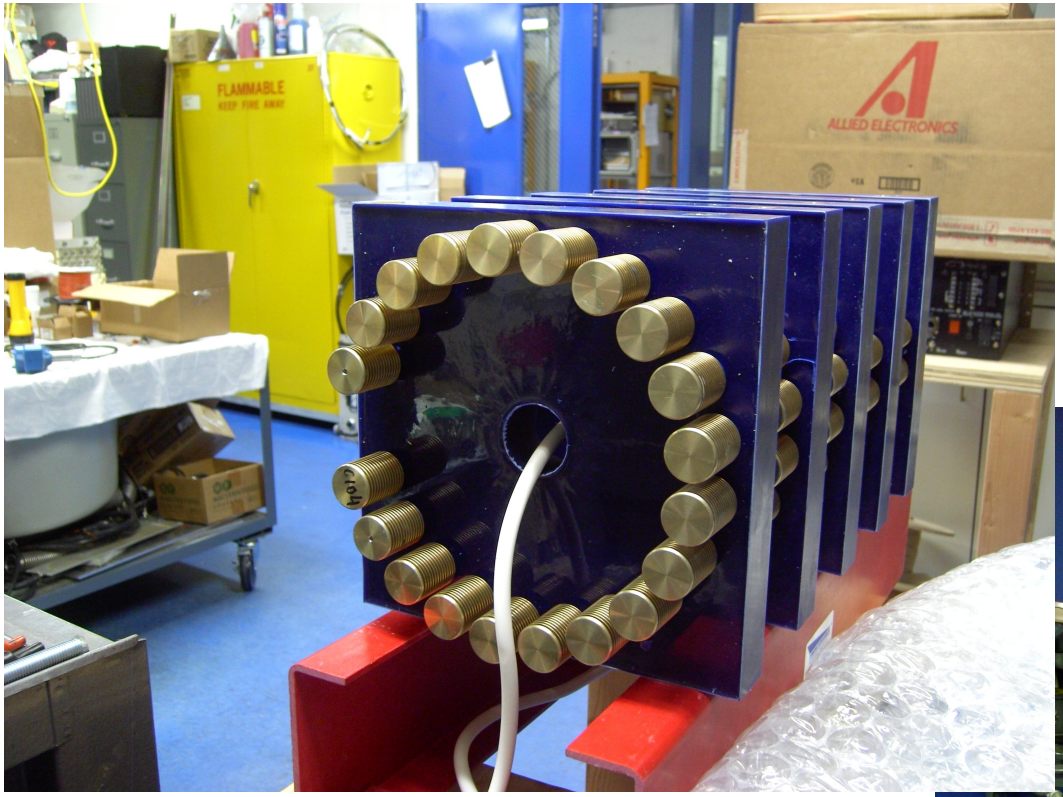

# Proposed test area layout

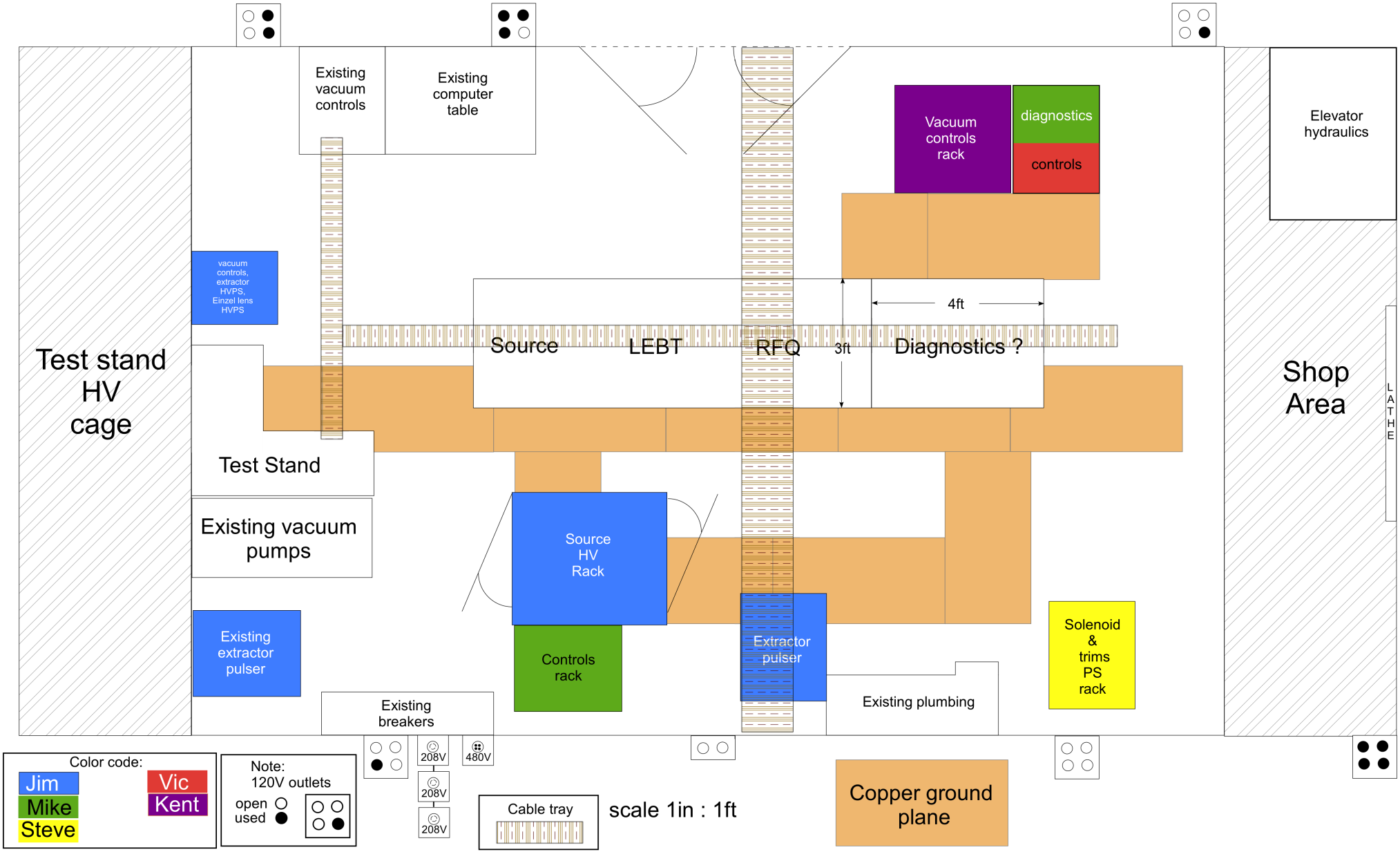

# RFQ Status

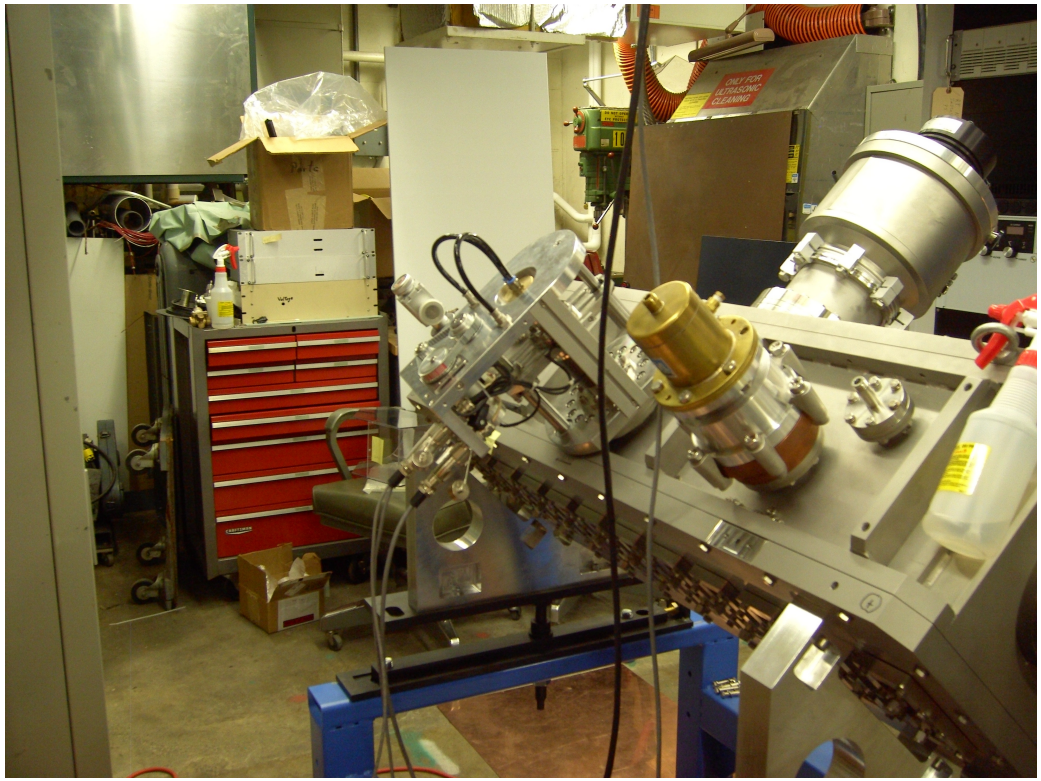

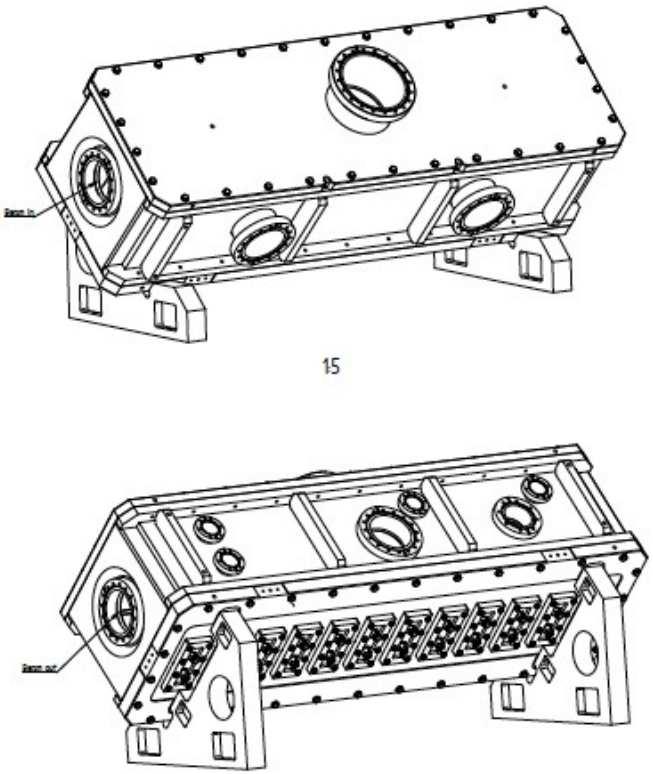


| Device | Status | Comments |
|---|---|---|
| High power conditioning started | Completed for 15 Hz conditioning | Forward power 110 kW, reflected 3 kW. 8 Dec |

# Test area, test stand and instrumentation

| Device | Status | Comments |
|---|---|---|
| emittance probes can | Can in village shop. | Projected to be completed in Jan 2012! |
| TOF | 3 BPM shells | We have them. |
| Faraday Cup | Needs zero length adapter | Have copper seals and zero length adapter ordered |

# Controls

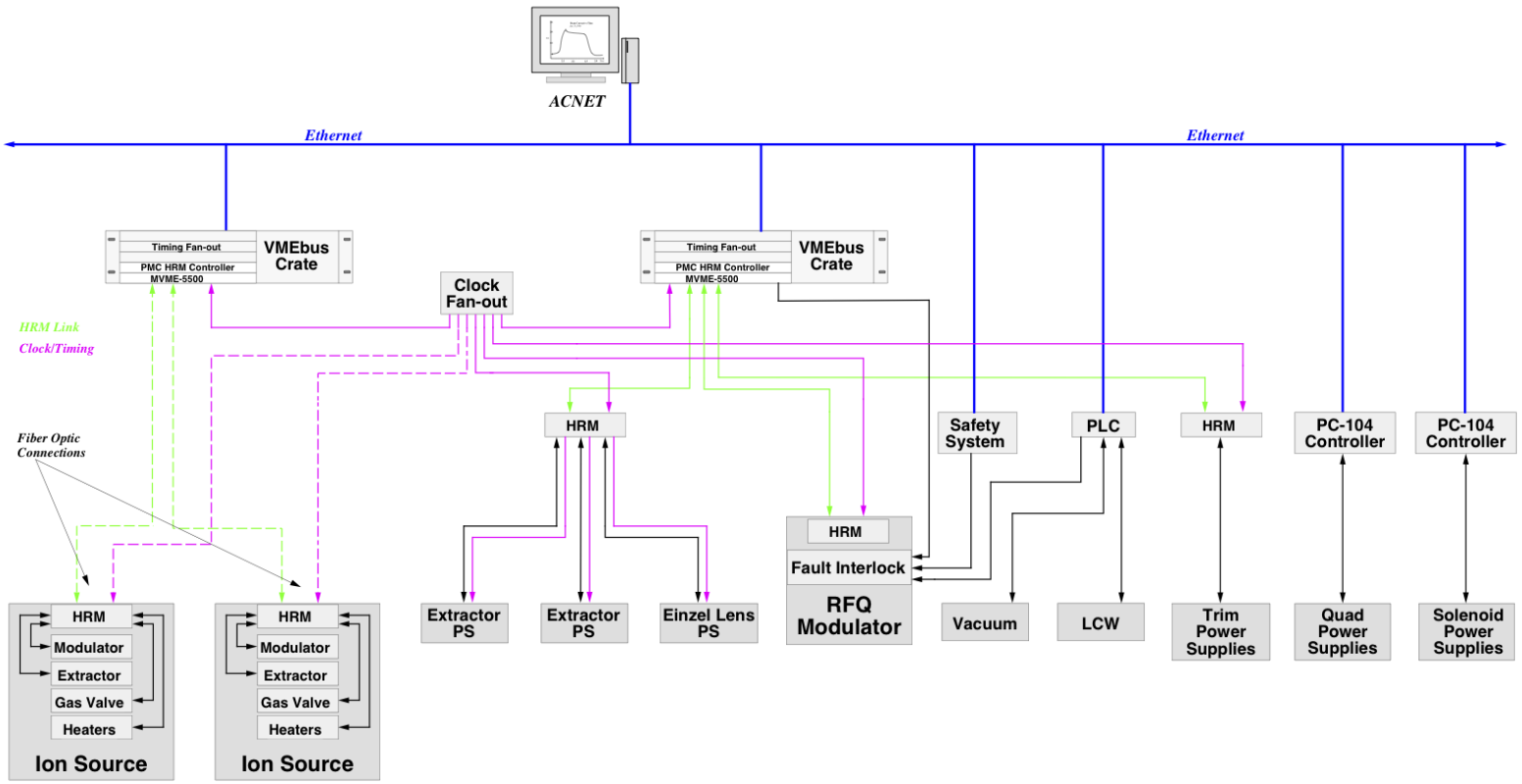


*Linac RFQ Upgrade Controls Block Diagram*

# Controls

-

# Safety