Pre-injector Upgrade Updates (18 Jan 2012 – 01 Feb 2012)

C.Y. Tan
01 Feb 2012

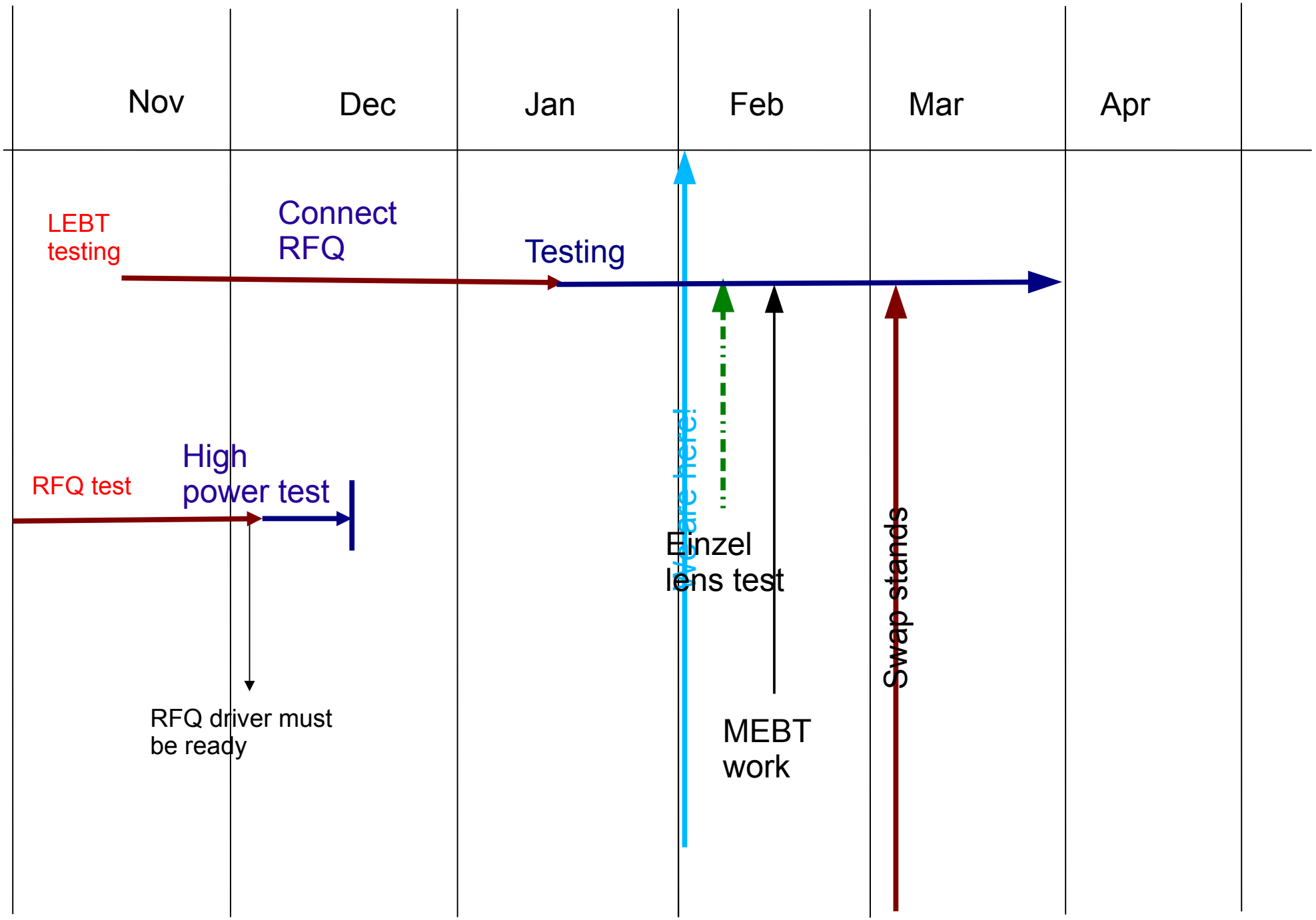
Nov
Dec
Jan
Feb
Mar
Apr
LEBT testing
Connect RFQ
Testing
We are here!
RFQ test
High power test
Einzel lens test
Swap stands
RFQ driver must be ready
MEBT work

Latest

- RFQ output energy is WRONG!
  - Measured 700 keV and NOT 750 keV.
  - In contact with Schempp.

Plans

- Emittance probe measurements (started 27 Jan)
- Einzel lens measurements (~Feb)

REV	DESCRIPTION	DRAWN	DATE
		APPROVED	DATE

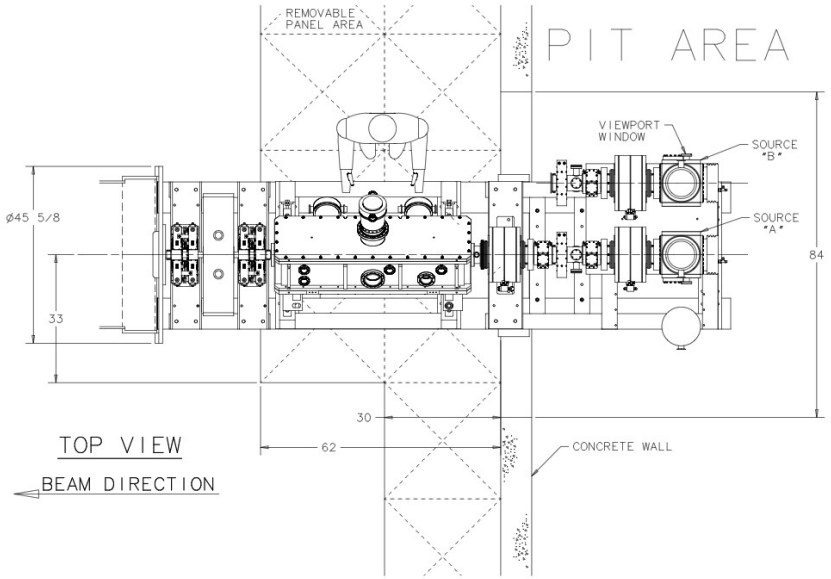

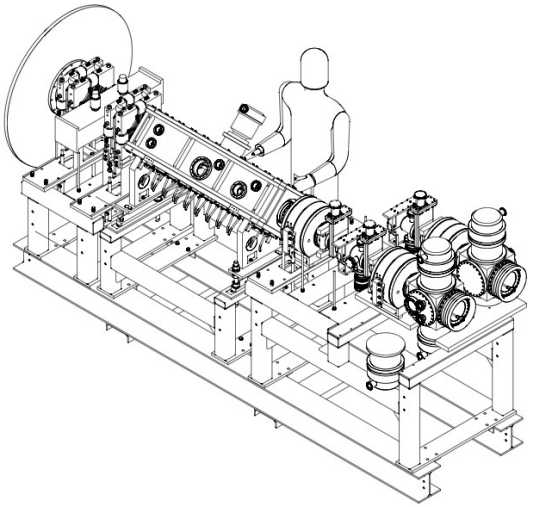

Really? Measured 47”

If we use 8” I beam, we will be >= 47.5” high

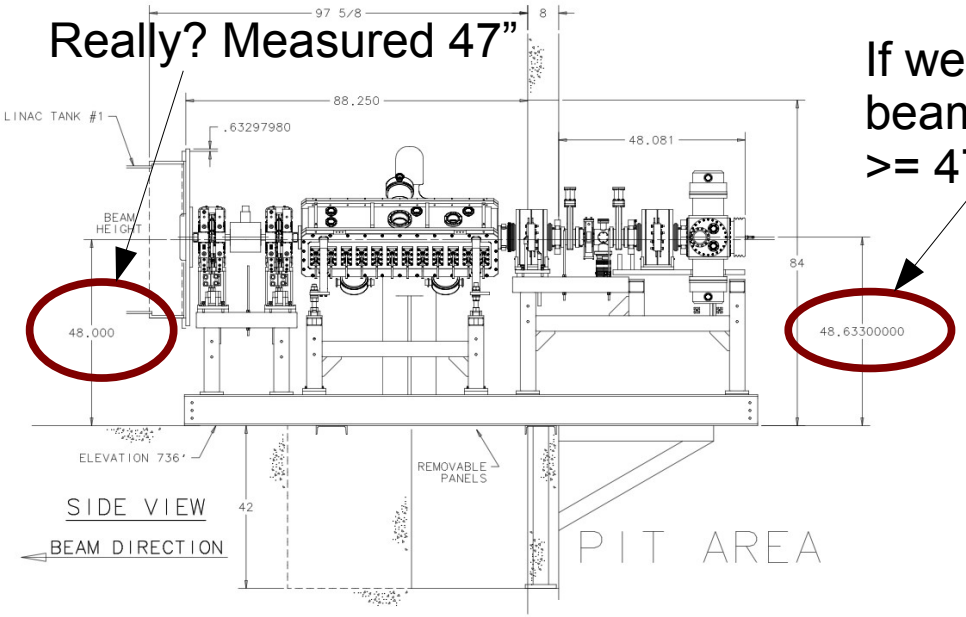

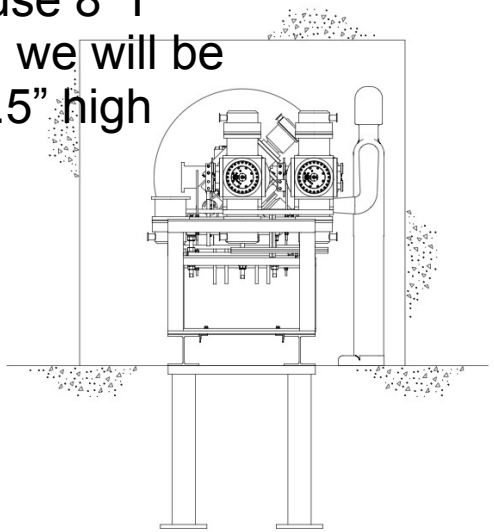

PREACCELERATOR PRELIMINARY LAYOUT

APRIL 27, 2011

UNLESS OTHERWISE SPECIFIED	ORIGINATOR	
± ± ±	DRAWN	
	CHECKED	
1. BREAK ALL SHARP EDGES .MAX. 2. DO NOT SCALE DRAWING. 3. DIMENSIONS BASED UPON ASME Y14.5M-1994 4. MAX. ALL MACH. SURFACES √ 5. DRAWING UNITS: U.S. INCH	APPROVED	
	USED ON	
	MATERIAL	

FERMI NATIONAL ACCELERATOR LABORATORY
UNITED STATES DEPARTMENT OF ENERGY

SCALE	DRAWING NUMBER	SHEET	REV
	. — —	1 OF 1	

CREATED WITH : GROUP :

Created: 10:31:09 on 28-06-11 (D-M-Y) By: mkielar State: 1-INITIAL

Source Status

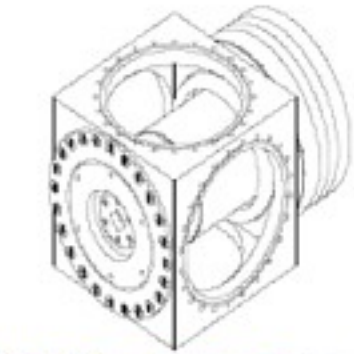

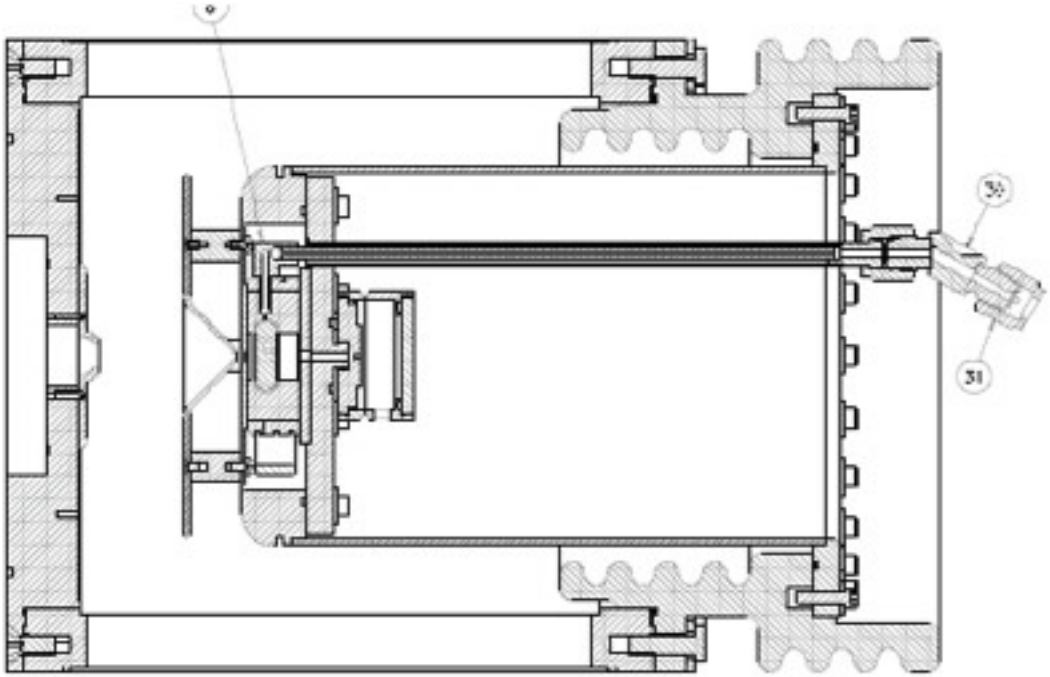

Device	Status	Comments
Source	Tuning continues …	Sparking at 35 keV continues

LEBT Status

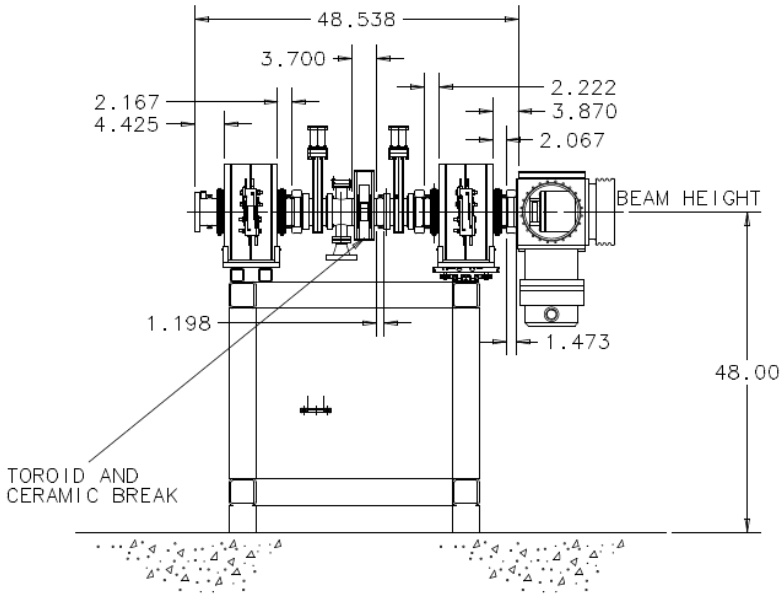

Device	Status	Comments
New slide	being designed	Expect to have by end of Feb 2012
Chopper box	Received 23 Jan	Being assembled …

Emittance Evolution in the BNL LEBT

H^- beam from the BNL circular aperture magnetron. After about 75 μs the emittance profile is more or less stable.

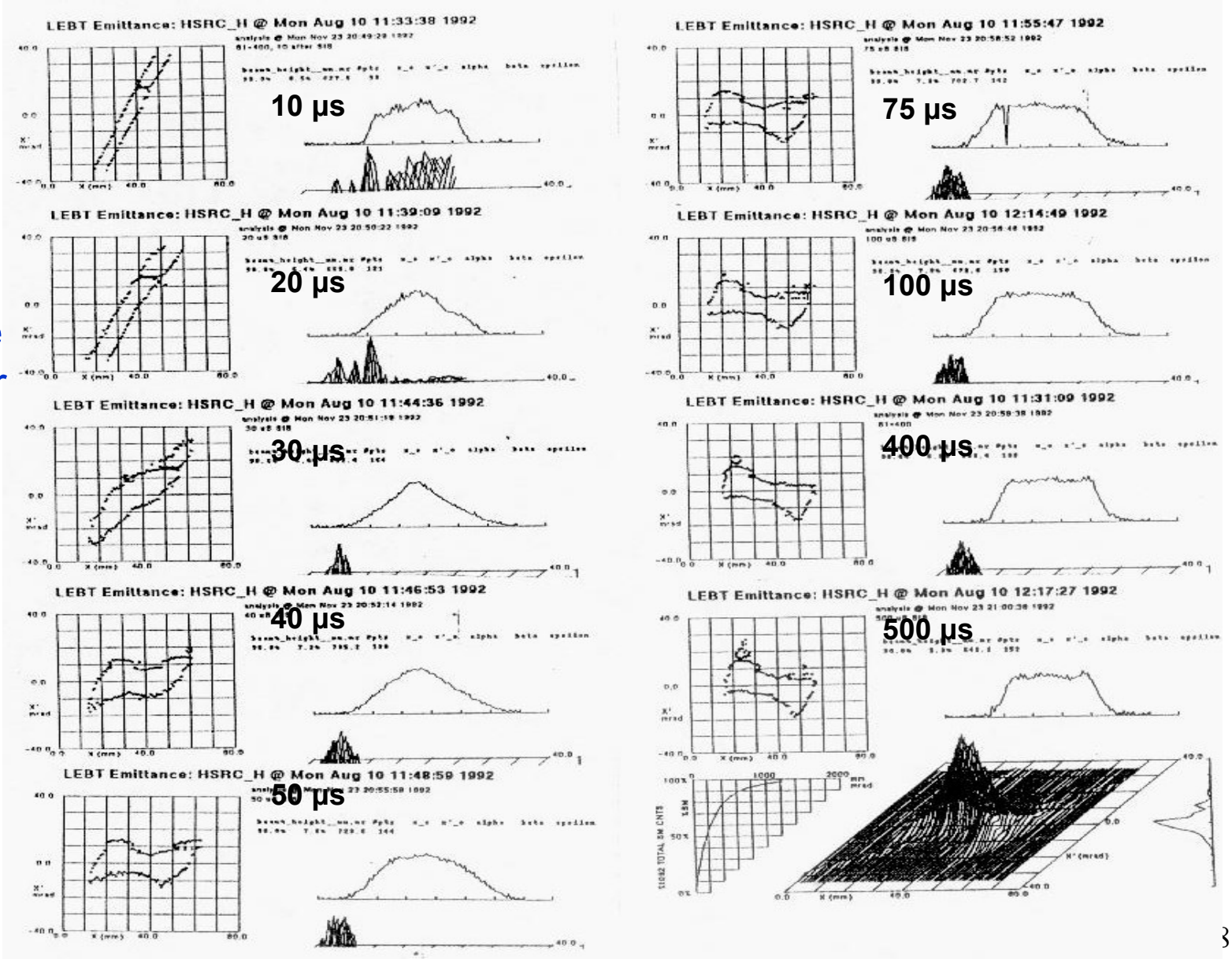

Graphs provided by Jim Allessi, BNL

Chopper Switches

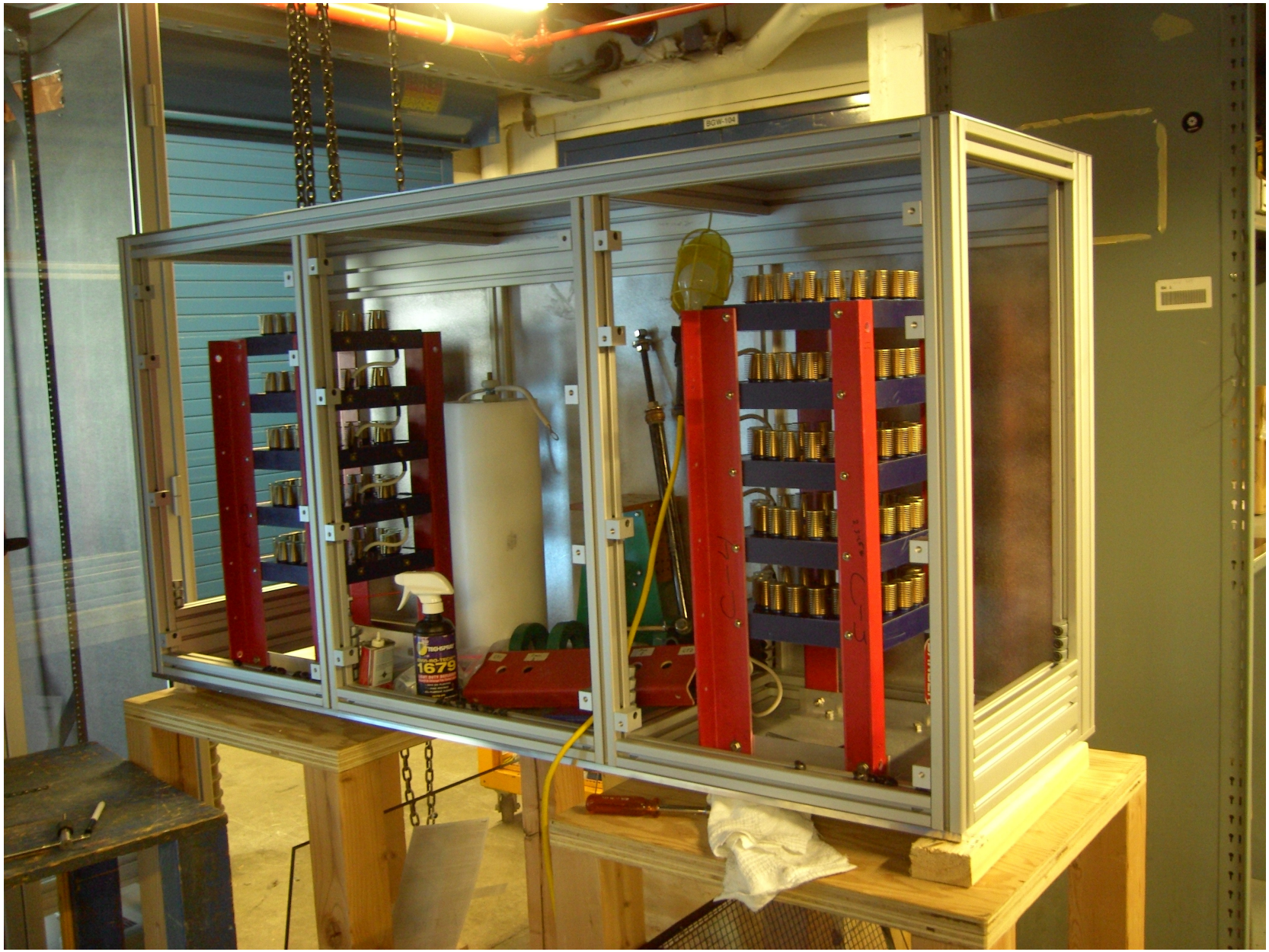

MEBT Status

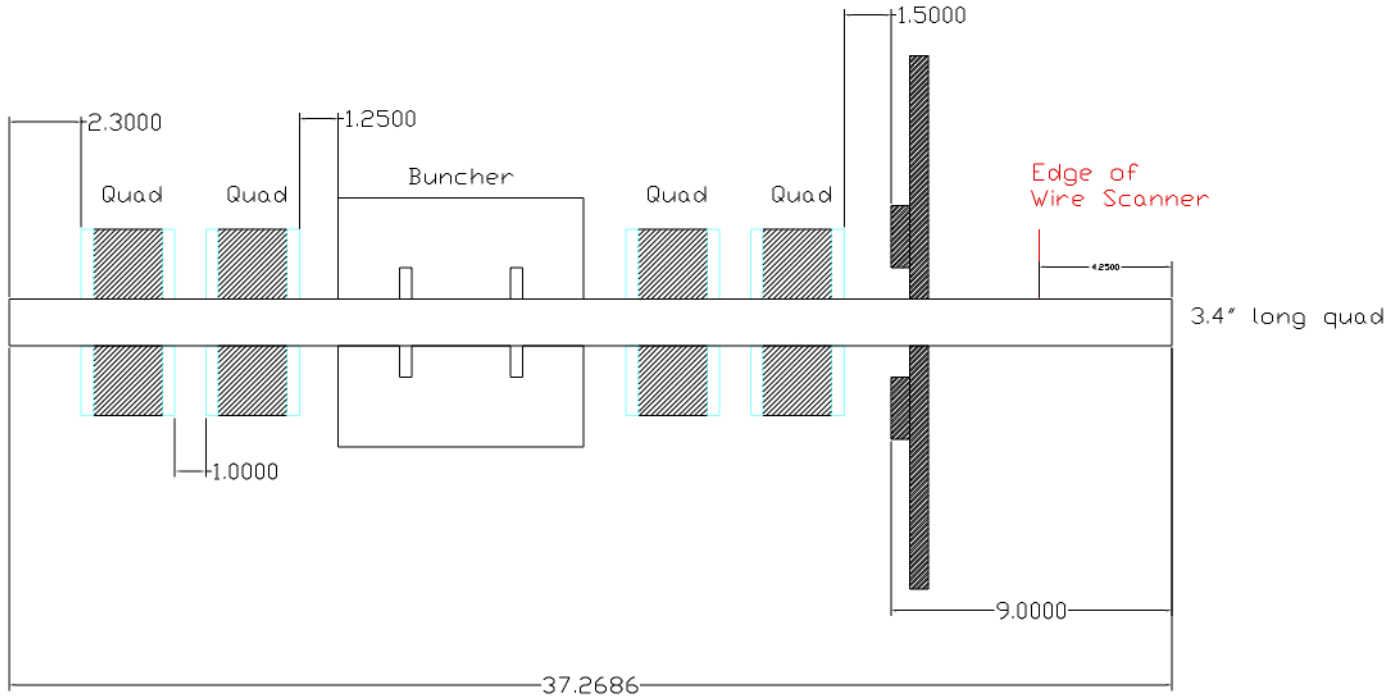

Device	Status	Comments
MEBT Stand	Being designed	
Quad doublets	Being paired and tested	Pitch and yaw adjustments to be added. Still on 1st set of doublets (24 Jan)

Are we buying PA for buncher?
Ion pump, controller gauging status?

RFQ Status

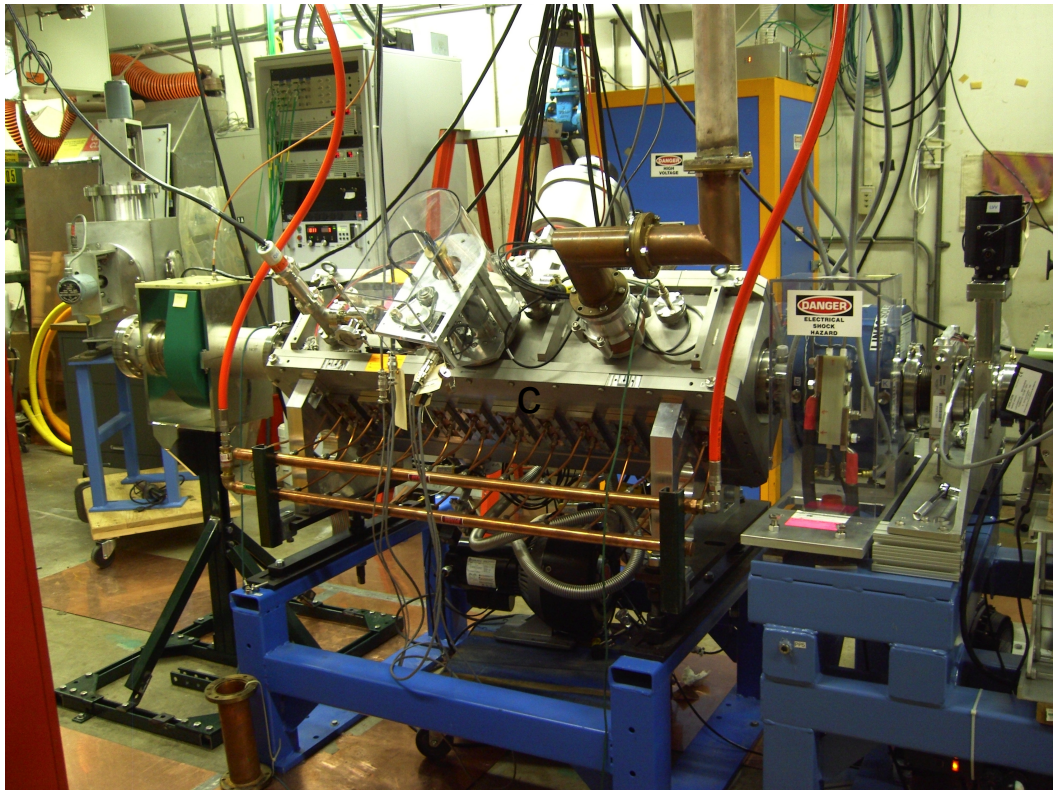

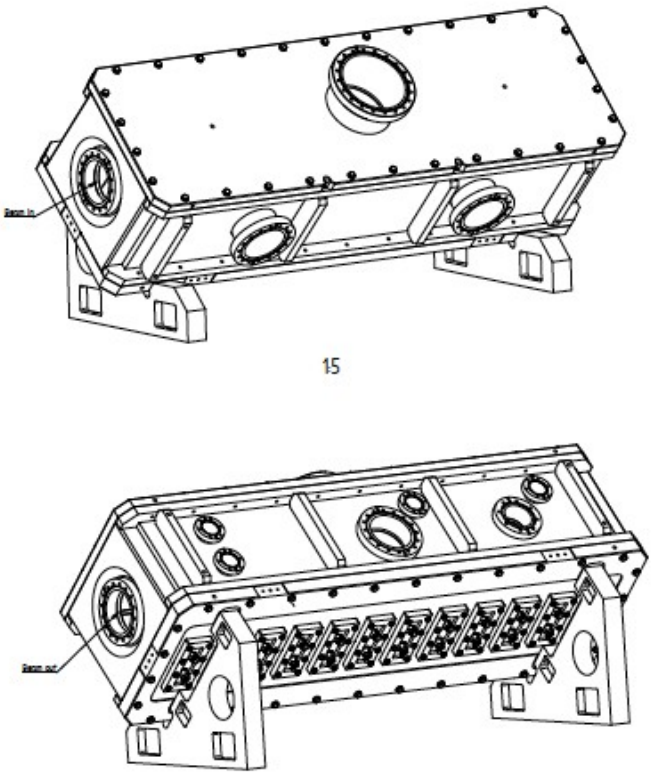

Device	Status	Comments
PLL work	Continues …	

Energy incorrect (mounting?)

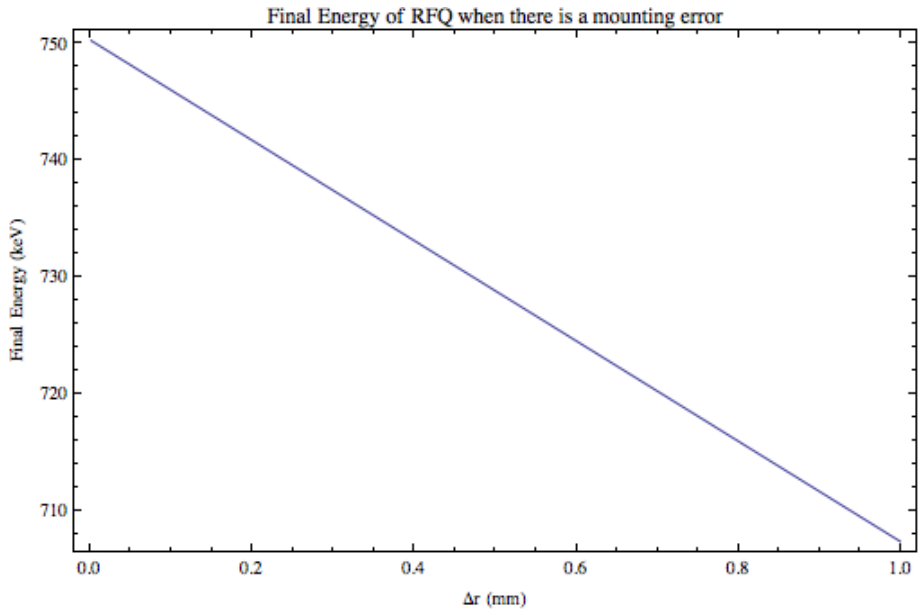

Redid measurements and we found that:
Vert hole radius = 4.58+/- 0.02 mm
Horz hole radius = 4.63 +/- 0.03 mm

My sims exit radius should be 0.46 cm

Vert ave: 0.5178 cm
Horz ave: 0.5459
Ave diff from “theory”: 0.07 cm

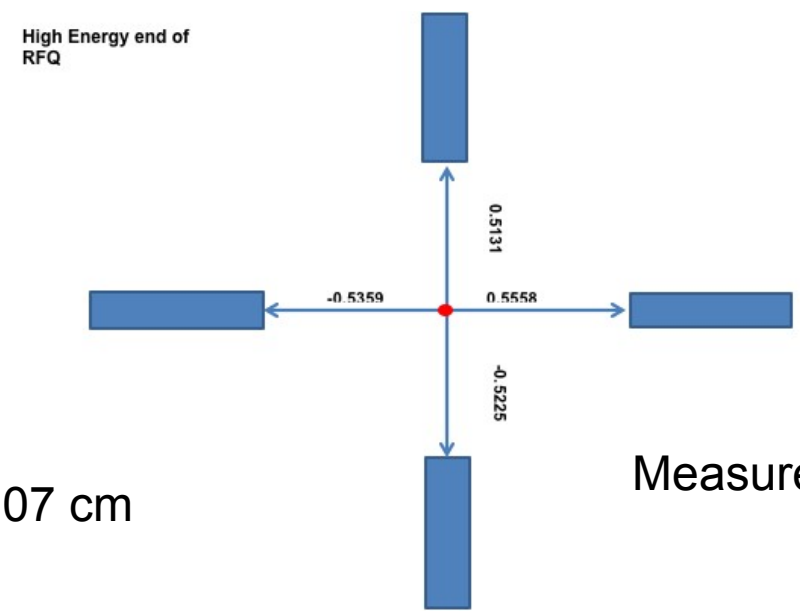

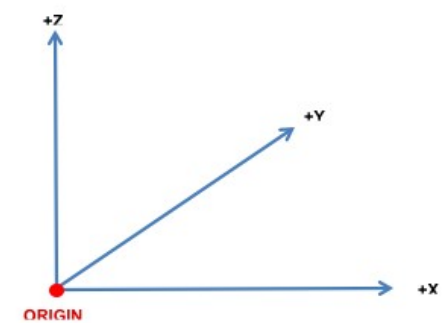

Measured by surveyors

Thermal profile of dump

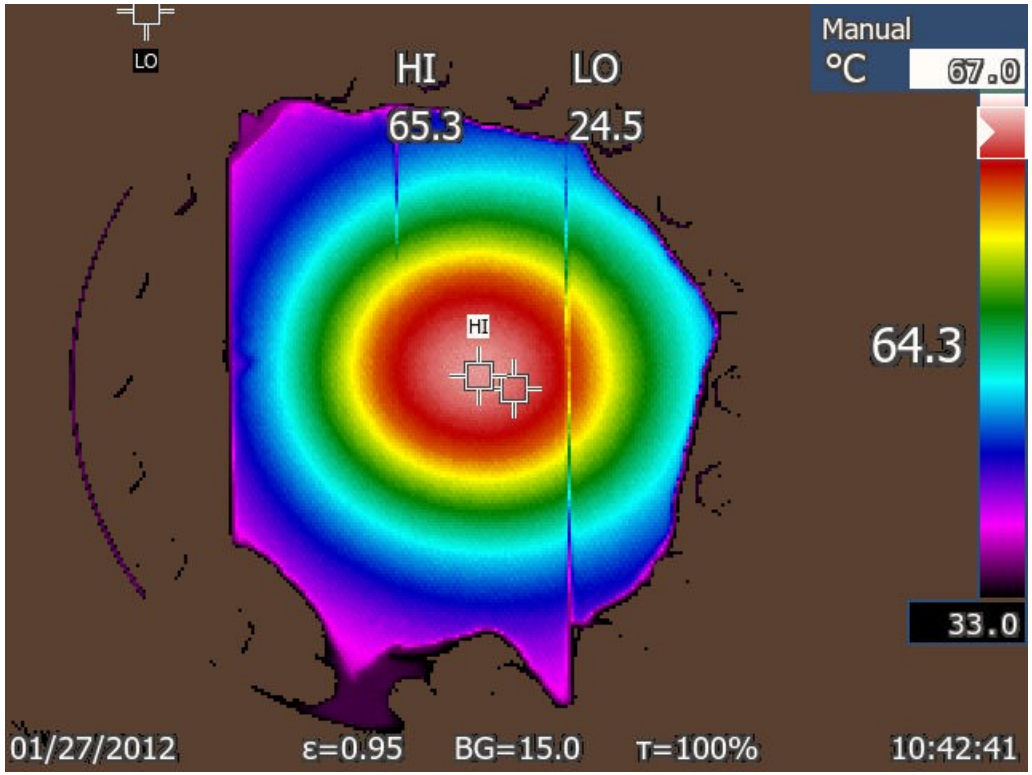

190 kW, 32 mA

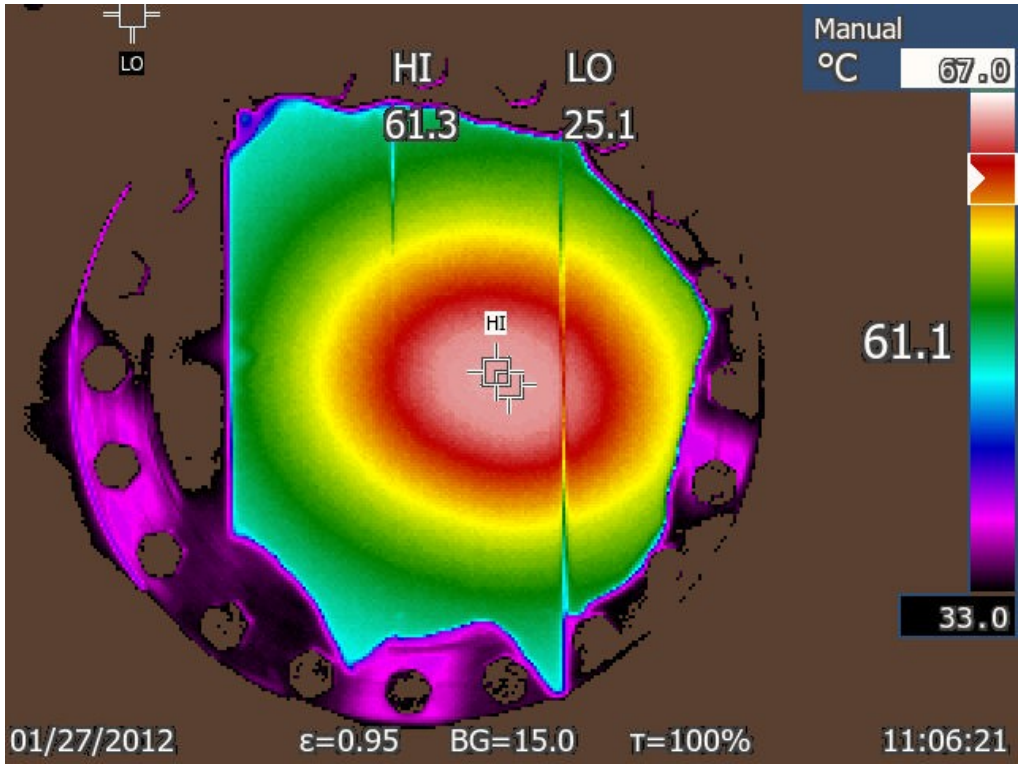

160 kW, 24 mA

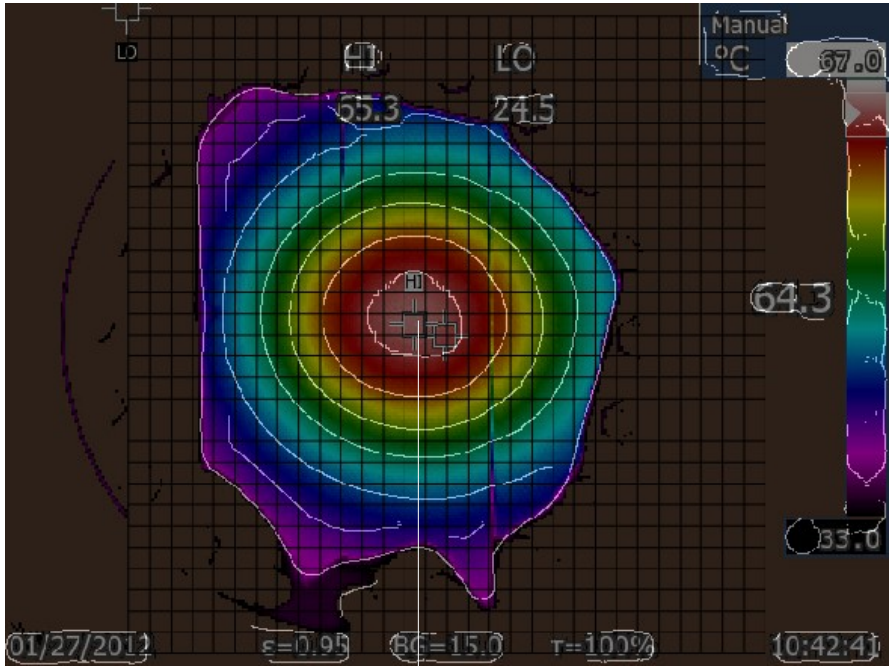

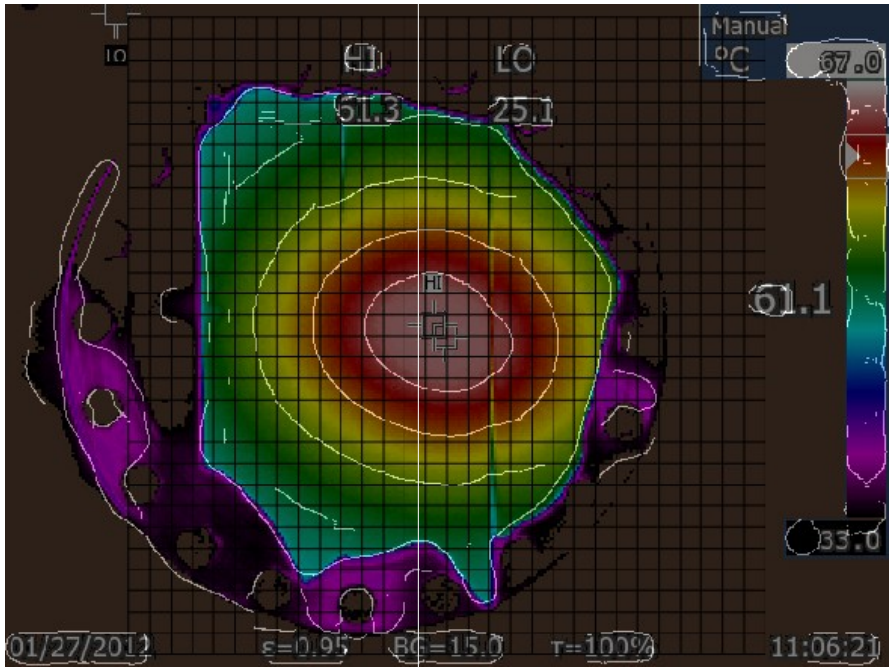

Centroid did shift as power in RFQ changed.

RFQ vane measurements

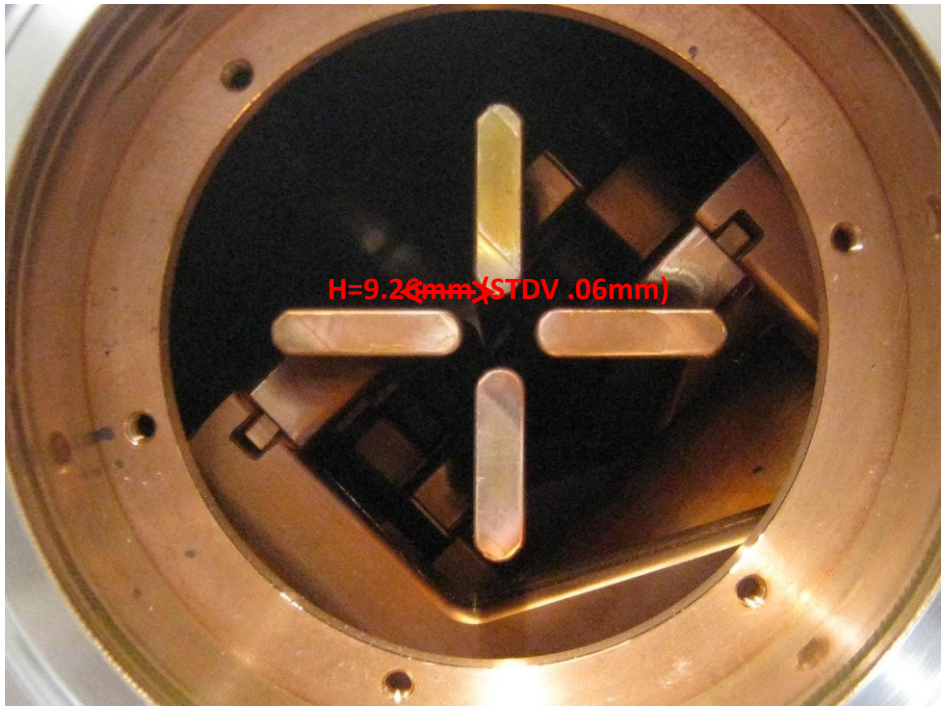

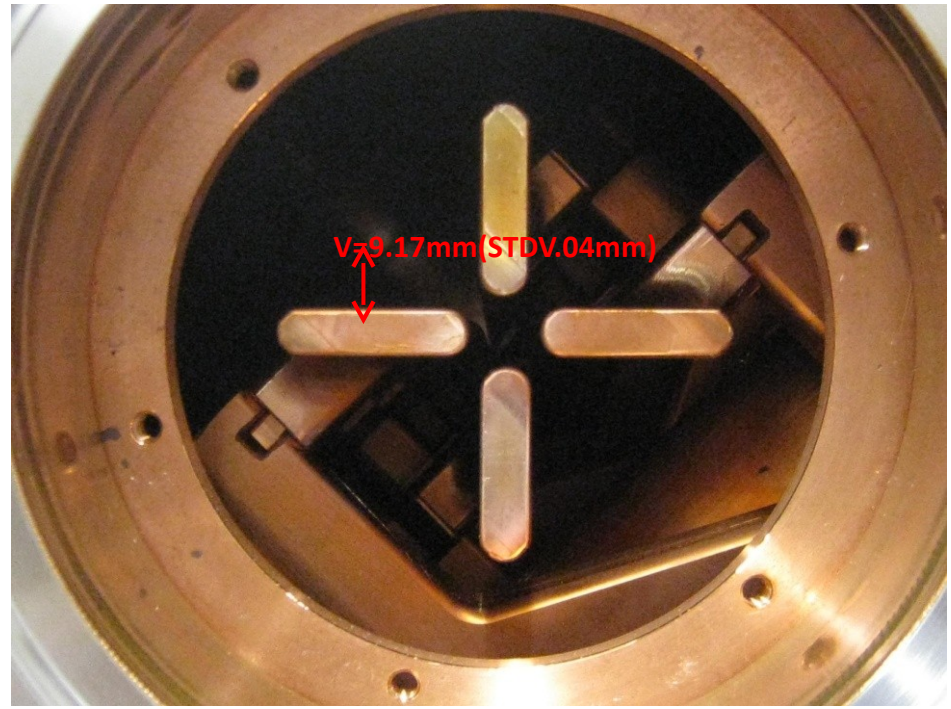

Proof that Kevin does work

From Dan

Test area, test stand and instrumentation

Device	Status	Comments
emittance probes can	Changed position of slits	01/31/11

Emittance probes

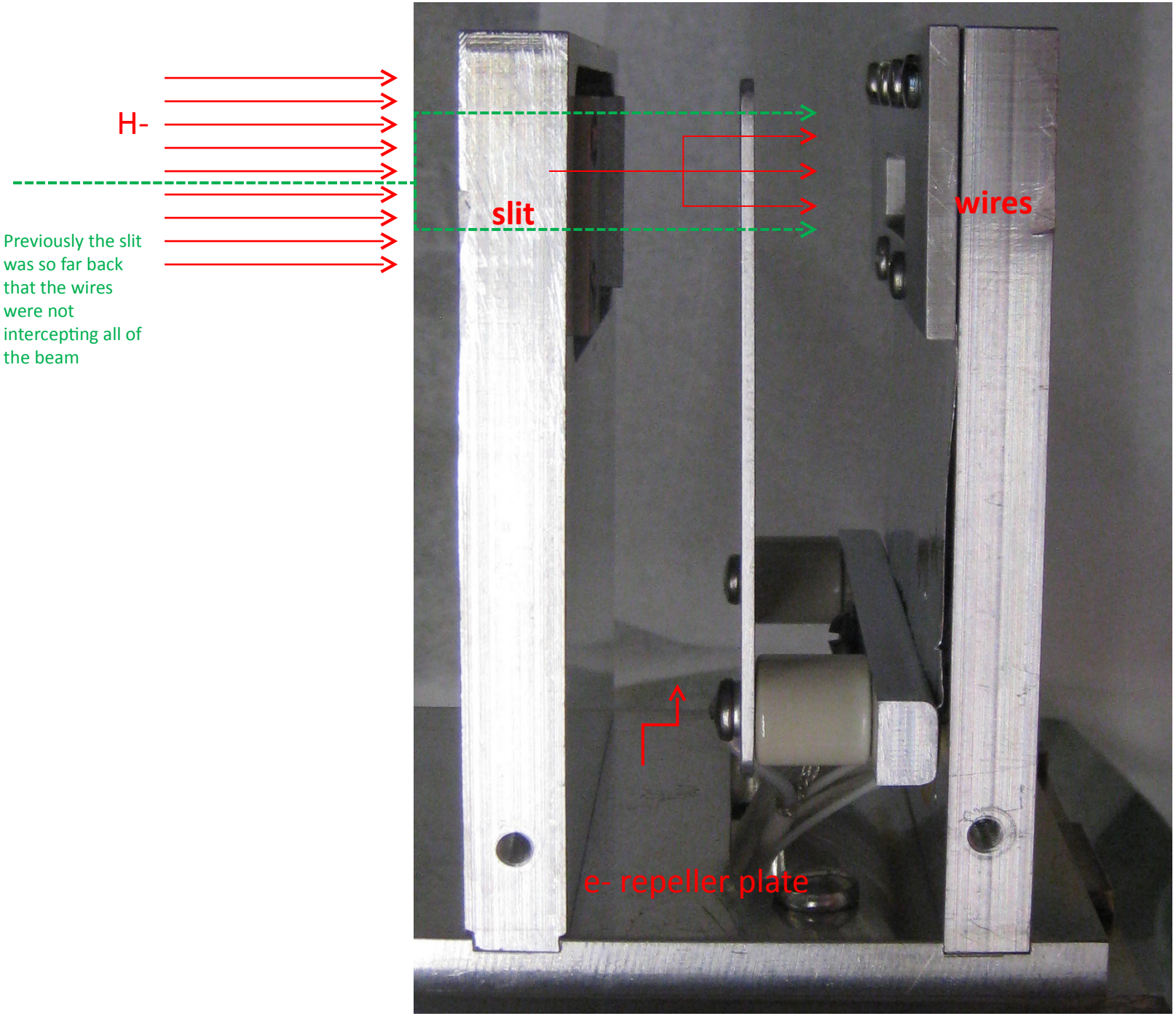

From Dan

Emittance probes

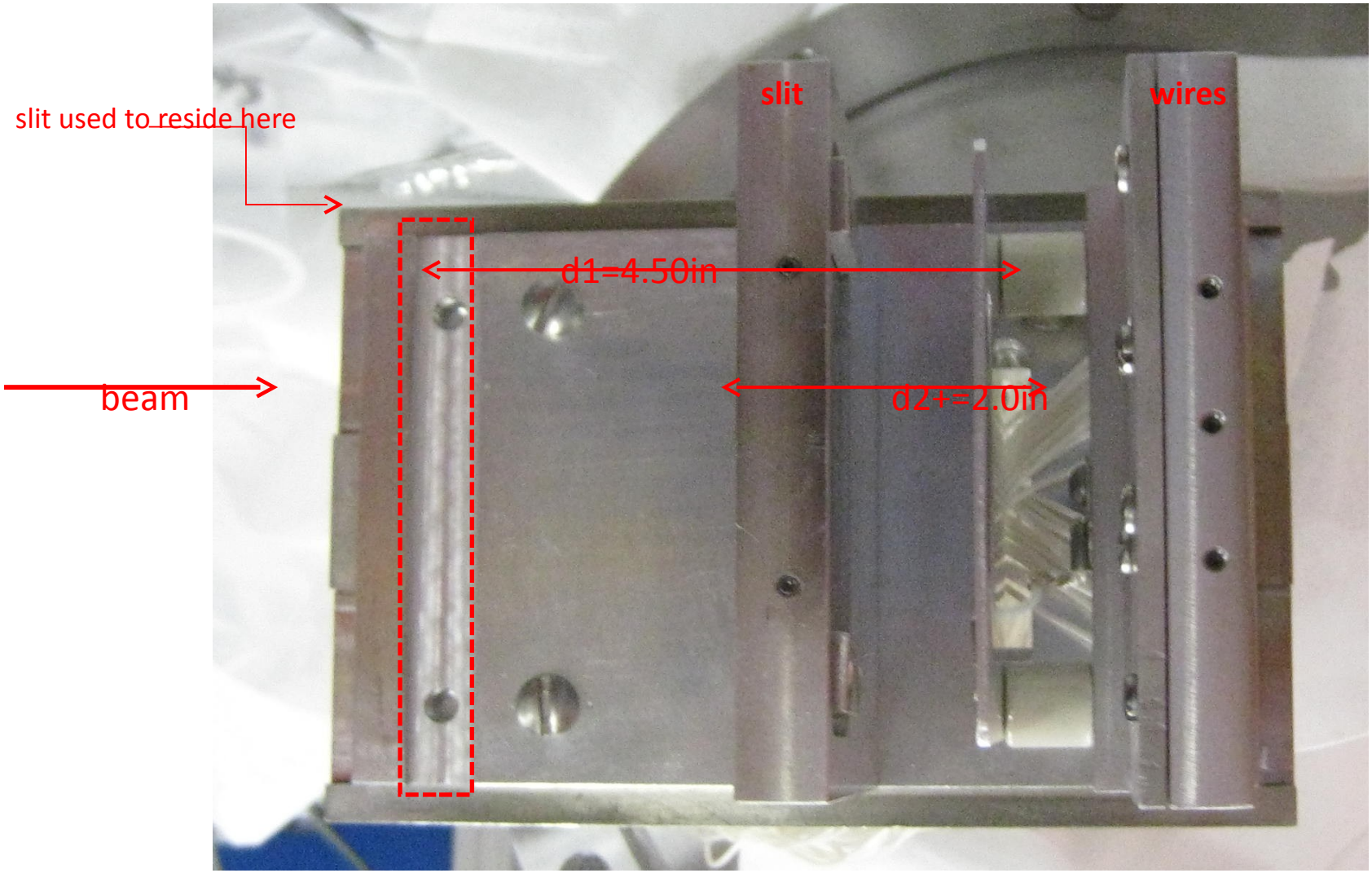

Angular resolution d1=2.2mrad
Angular resolution d2=5.0mrad

From Dan

Controls

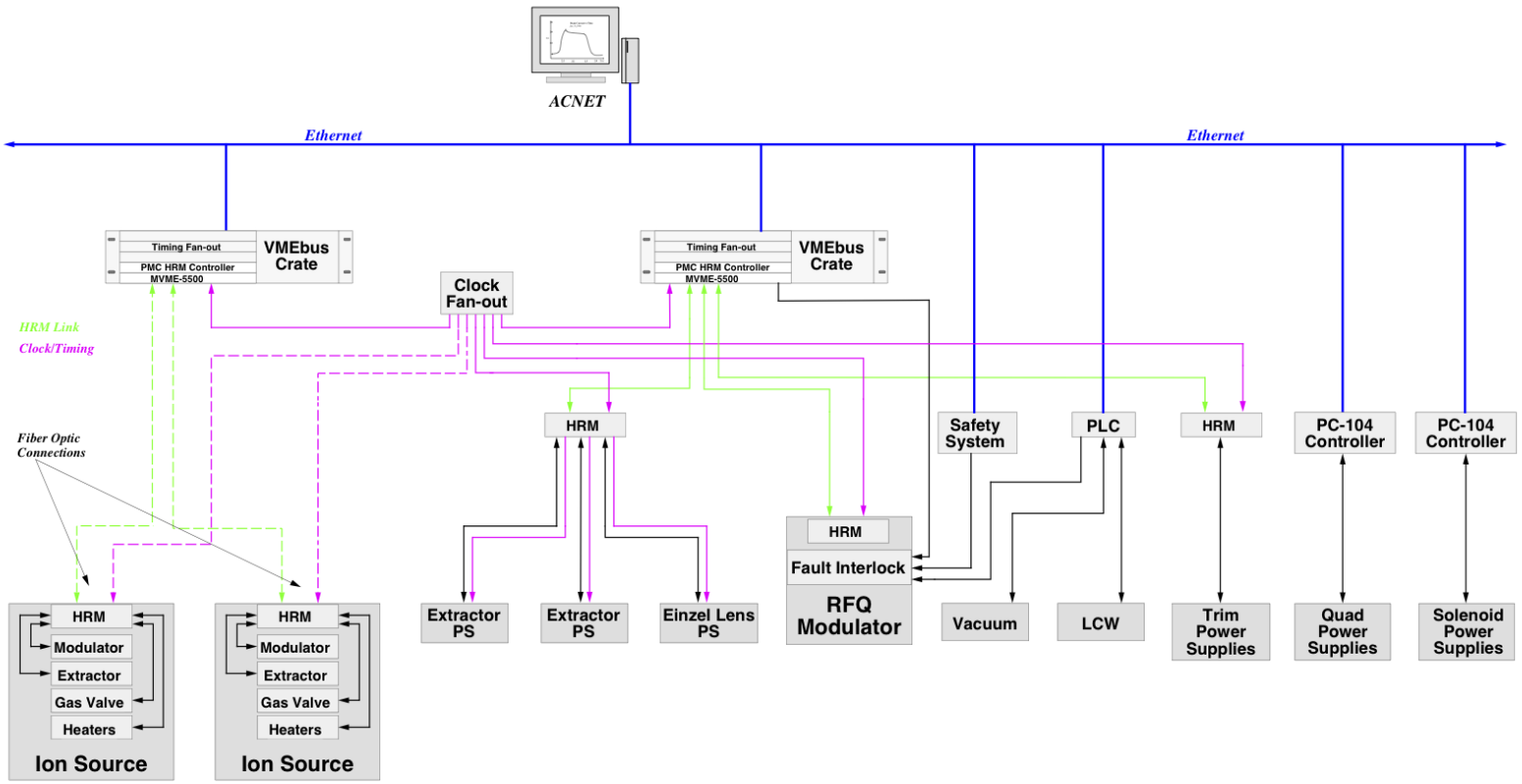

Linac RFQ Upgrade Controls Block Diagram

Controls

-

Safety