Pre-injector Upgrade Updates (01 Feb 2012 – 15 Feb 2012)

C.Y. Tan

15 Feb 2012

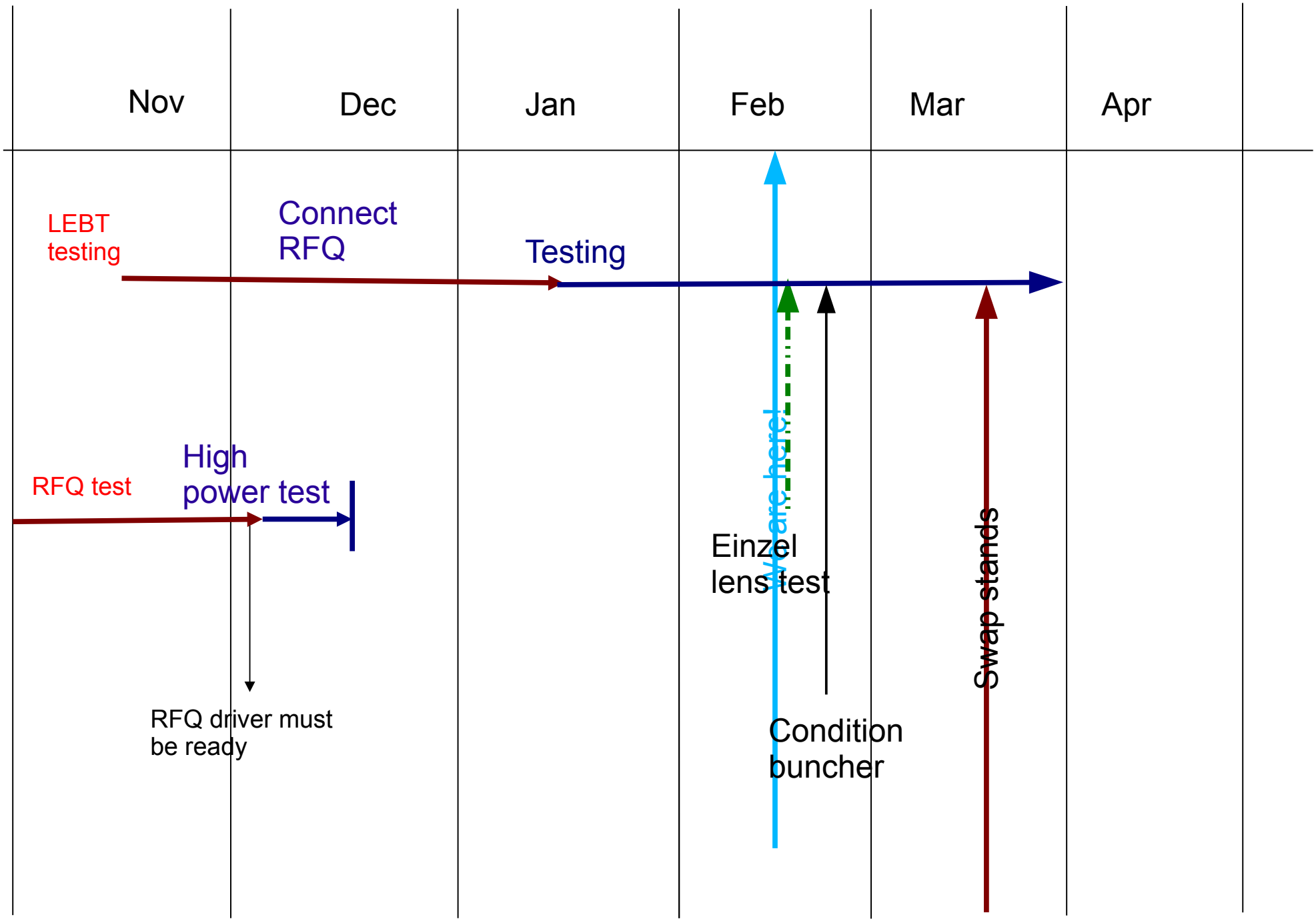
Nov
Dec
Jan
Feb
Mar
Apr
LEBT testing
Connect RFQ
Testing
RFQ test
High power test
RFQ driver must be ready
we are here!
Einzel lens test
Condition buncher
Swap stands

Latest

- Completed transverse emittance measurements.
- Completed energy scan of H- as function of RFQ power.
- Completed Faraday Cup measurements.

Plans

- Einzel lens chopper measurements.

REV	DESCRIPTION	DRAWN	DATE
		APPROVED	DATE

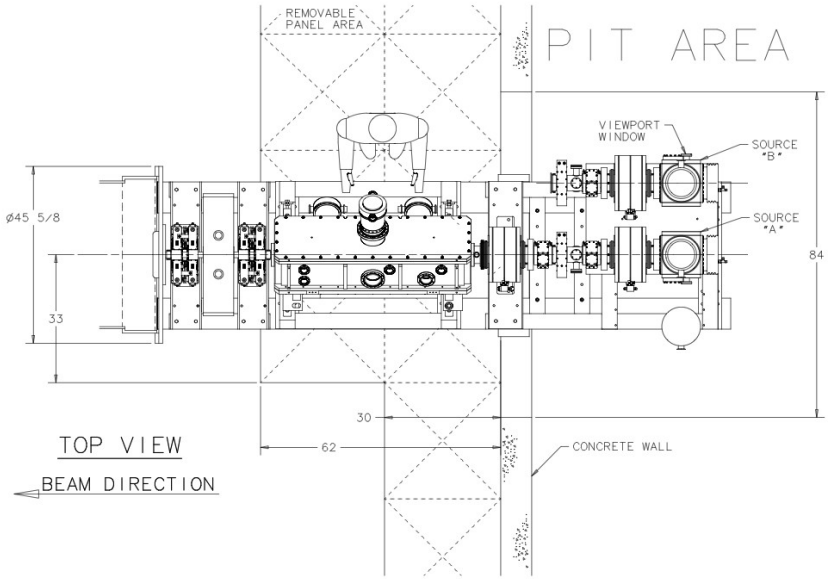

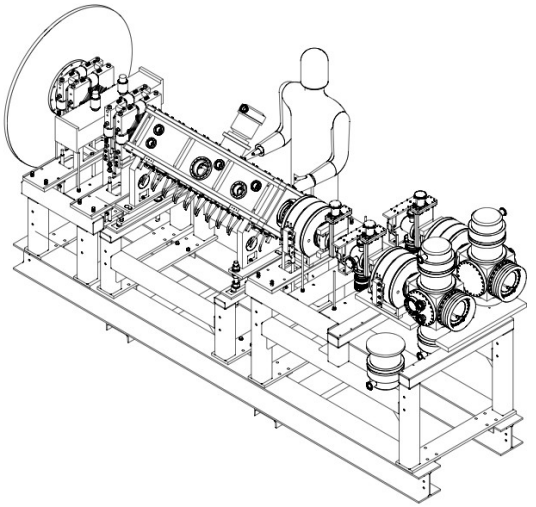

Really? Measured 47”

If we use 8” I beam, we will be >= 47.5” high

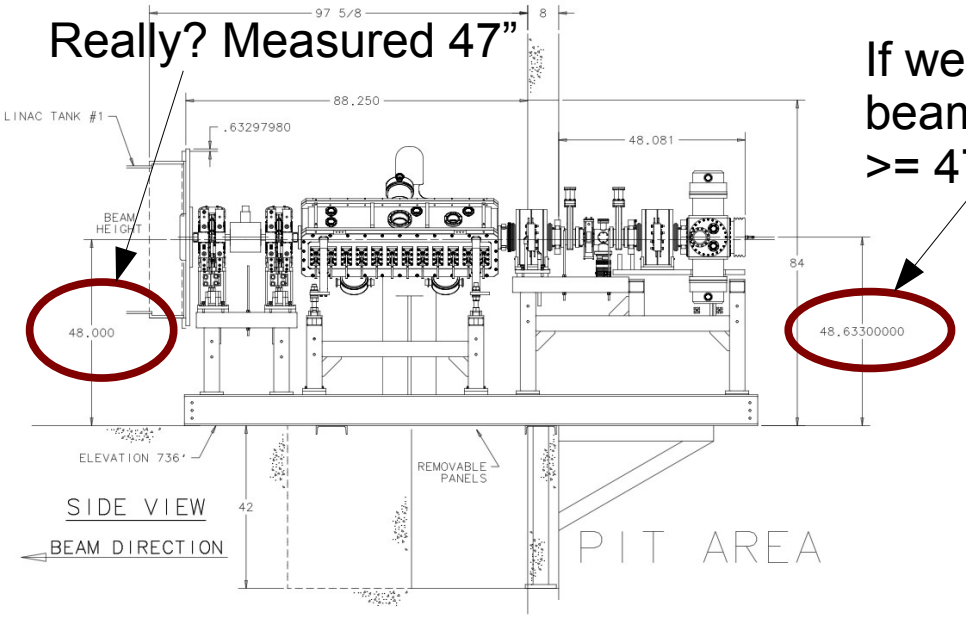

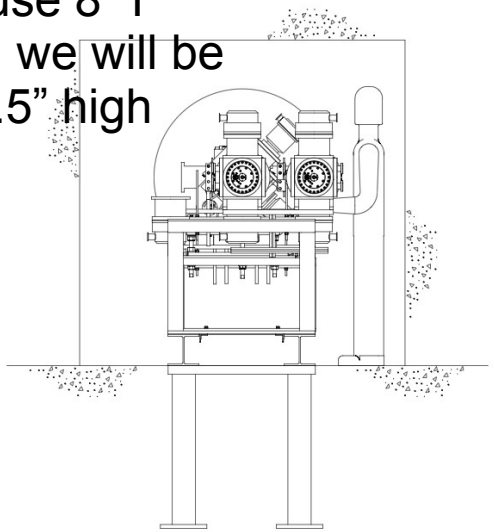

PREACCELERATOR PRELIMINARY LAYOUT

APRIL 27, 2011

UNLESS OTHERWISE SPECIFIED	ORIGINATOR	
± ± ±	DRAWN	
	CHECKED	
1. BREAK ALL SHARP EDGES .MAX. 2. DO NOT SCALE DRAWING. 3. DIMENSIONS BASED UPON ASME Y14.5M-1994 4. MAX. ALL MACH. SURFACES √ 5. DRAWING UNITS: U.S. INCH	APPROVED	
	USED ON	
	MATERIAL	

FERMI NATIONAL ACCELERATOR LABORATORY
UNITED STATES DEPARTMENT OF ENERGY

SCALE	DRAWING NUMBER	SHEET	REV
	. — —	1 OF 1	

CREATED WITH : GROUP :

Created: 10:31:09 on 28-06-11 (D-M-Y) By: mkielar State: 1-INITIAL

Source Status

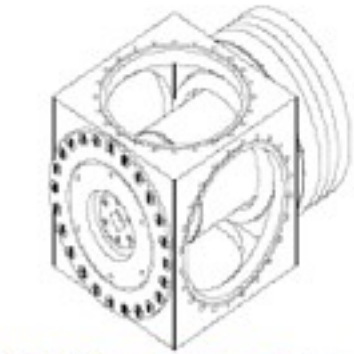

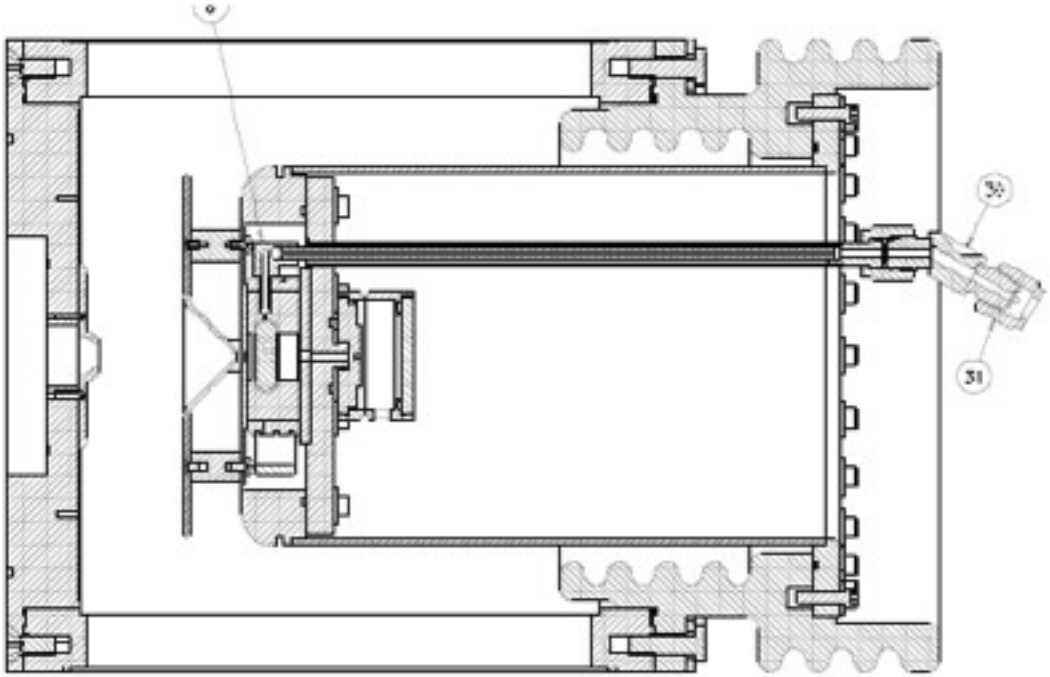

Device	Status	Comments
Source	Tuning continues …	Sparking at 35 keV continues

LEBT Status

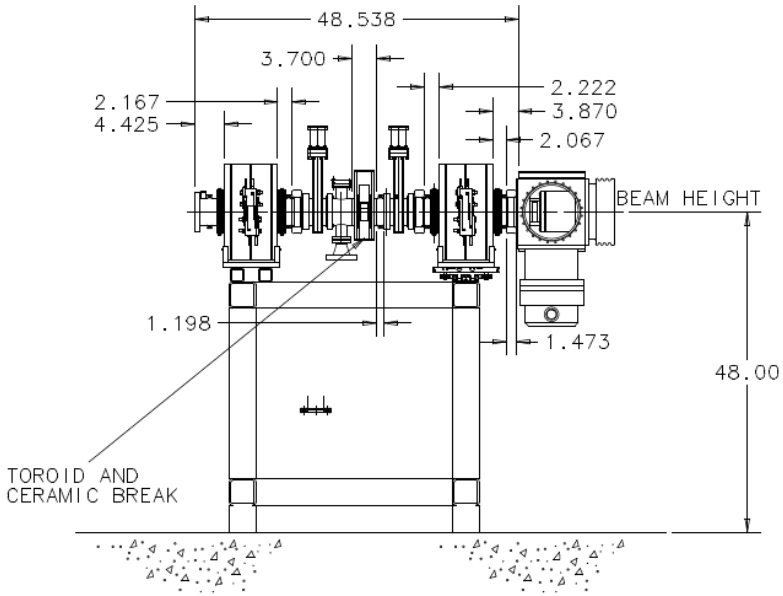

Device	Status	Comments
New slide	being designed	Expect to have by mid March 2012

MEBT Status

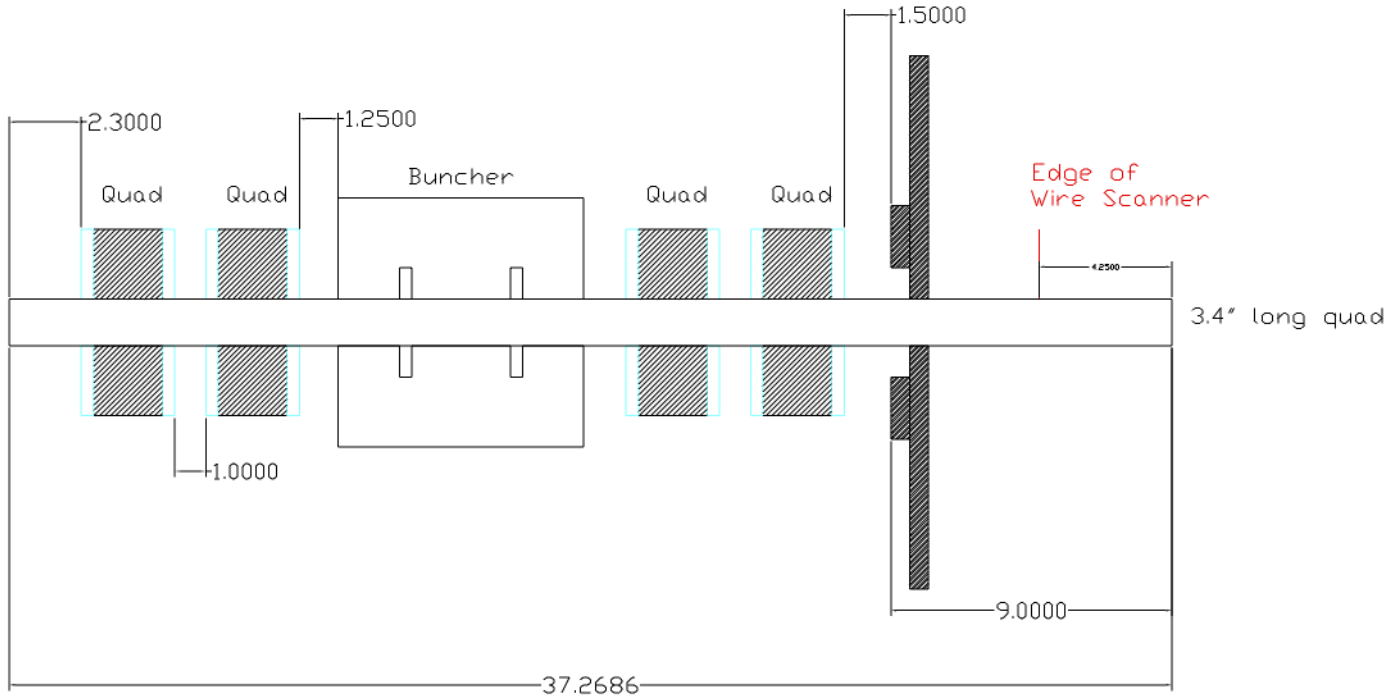

Device	Status	Comments
MEBT Stand	Being designed	
Quad doublets	Being paired and tested	More pitch and yaw engineering. Still on 1st doublet. (07 Feb)

Are we buying PA for buncher?
Ion pump, controller gauging status?

RFQ Status

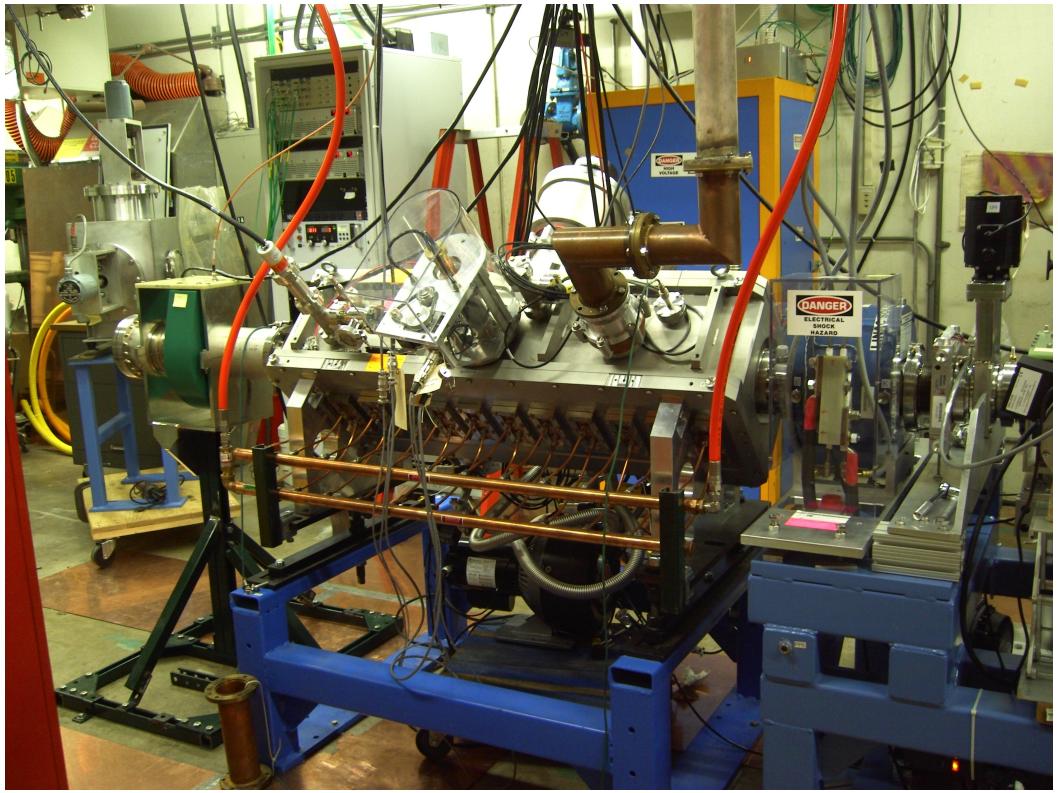

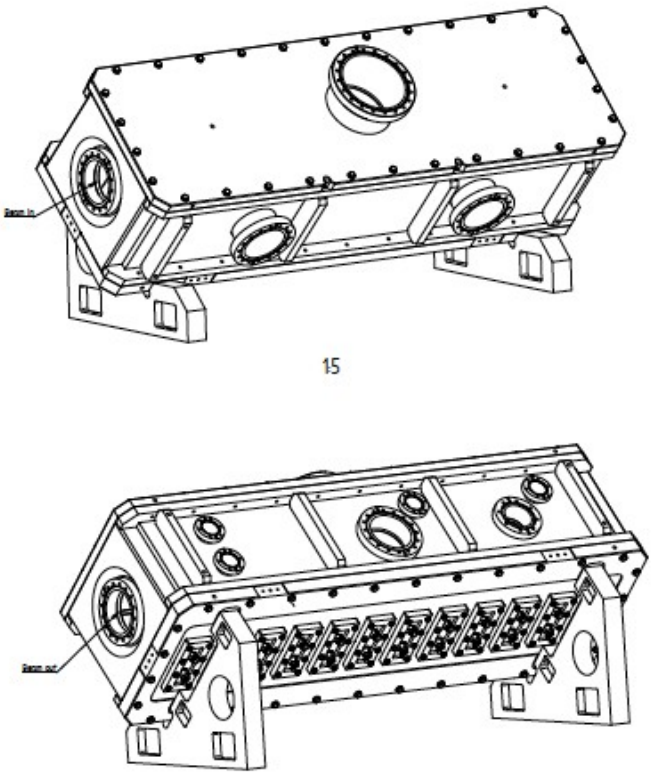

Device	Status	Comments
PLL work	Continues …	
Power calibration	Prior power calibration inaccurate	All previous graphs involving RFQ power must be fixed

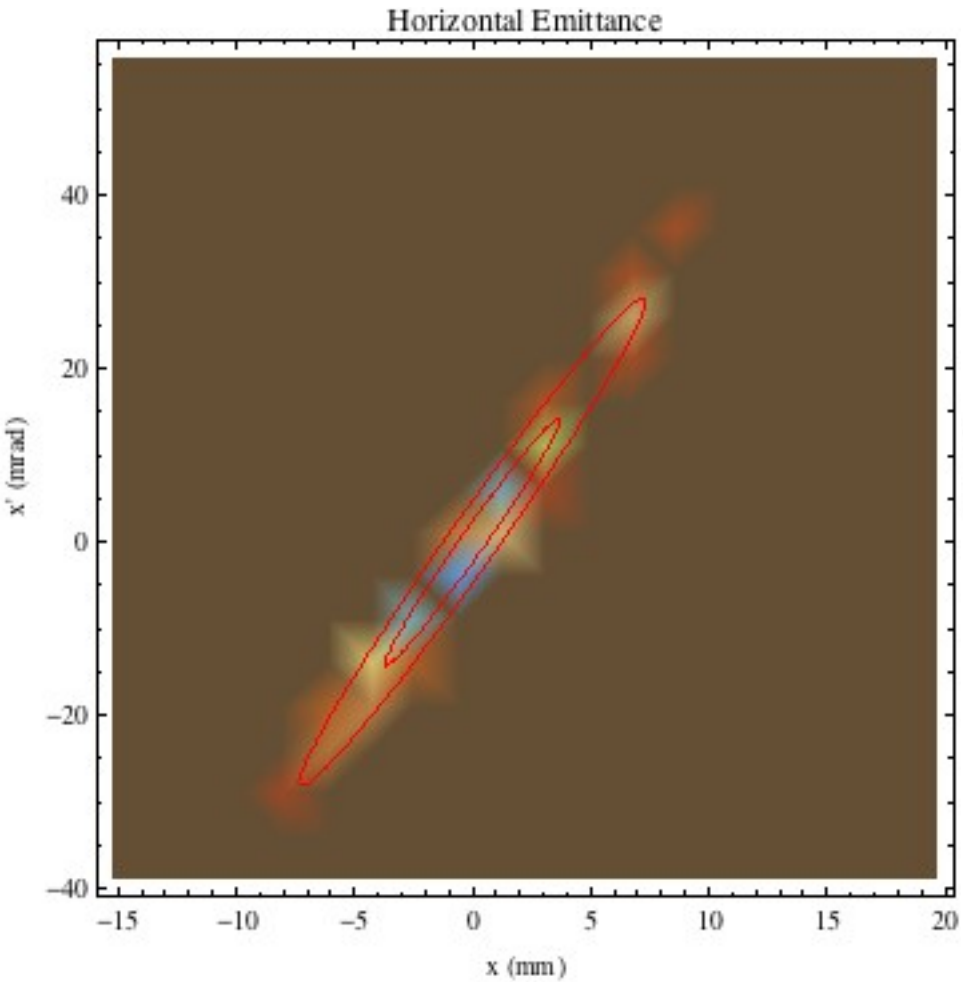

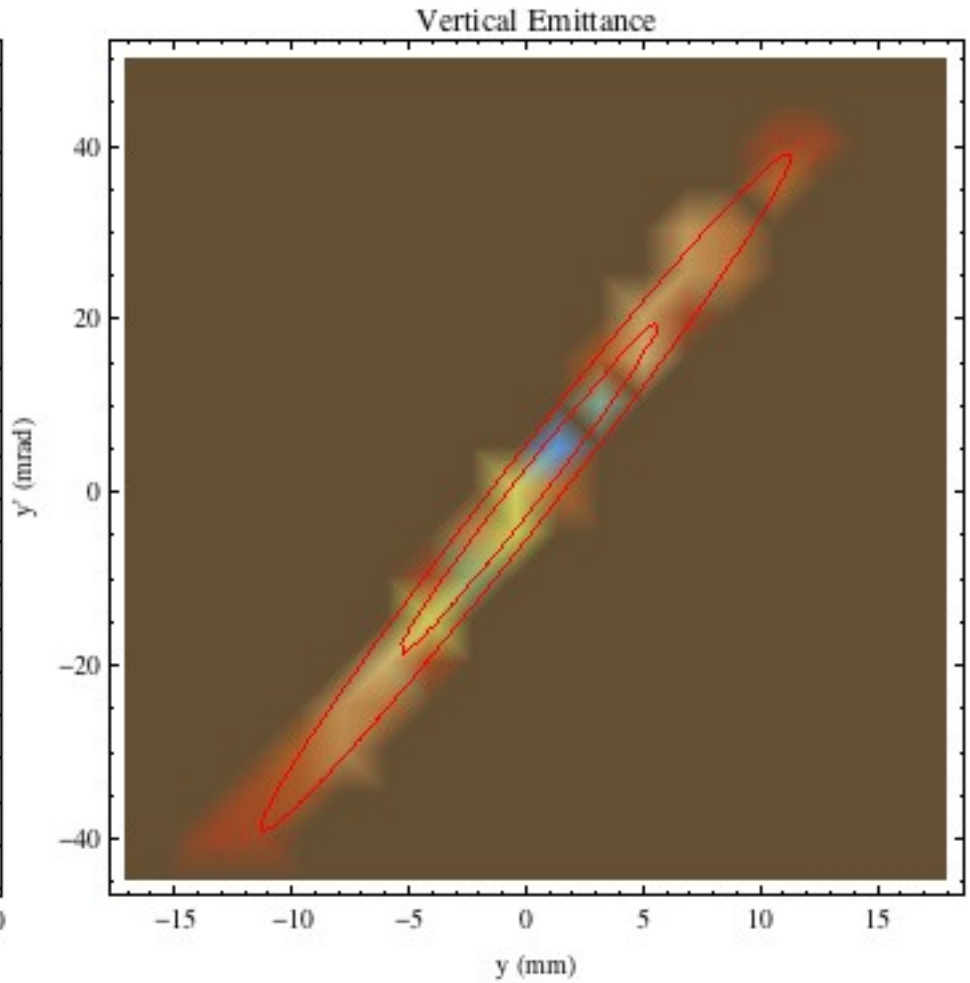

As found emittance:
εx = 0.35 π mm mrad, 1 sigma, normalized.
εy = 0.62 π mm mrad, 1 sigma, normalized.

Vertical emittance is > 1.5x LARGER than expected!

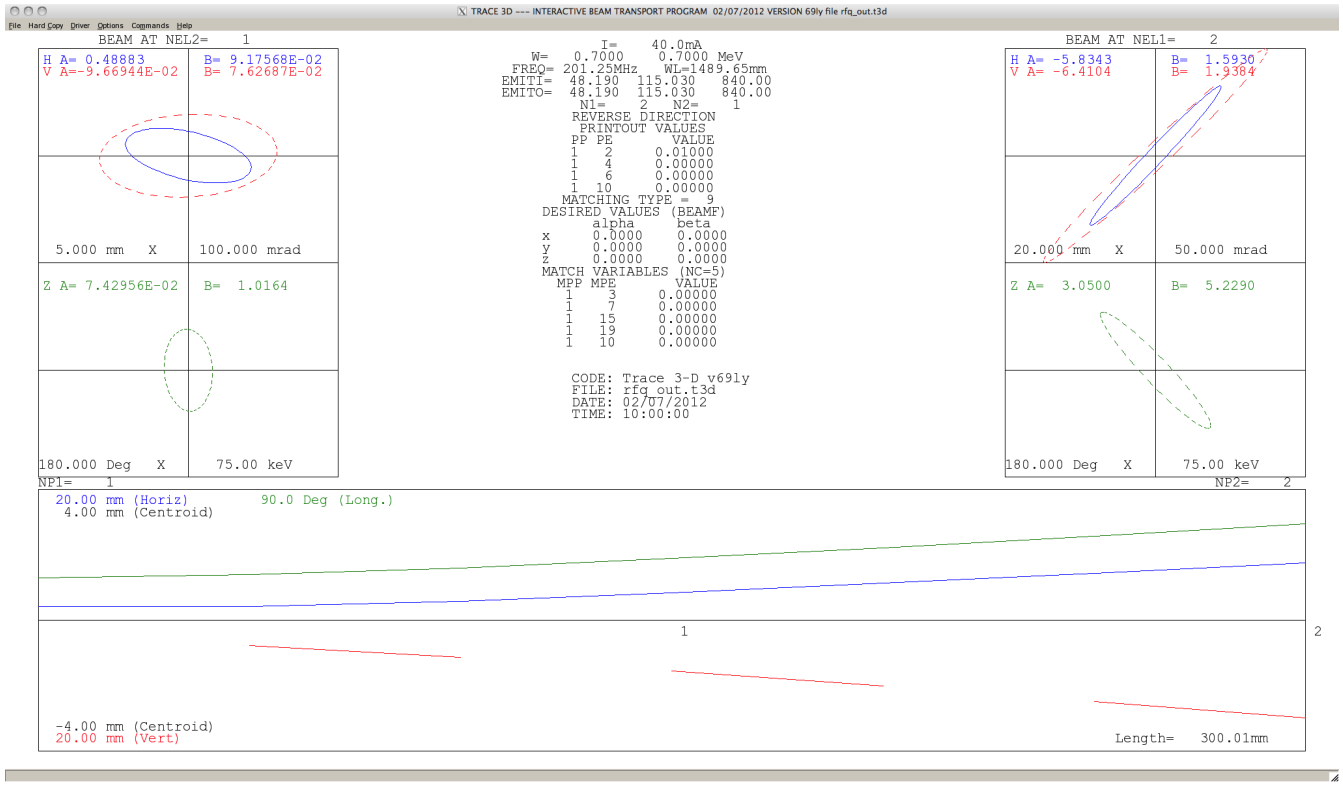

Back-propaged to start of RFQ

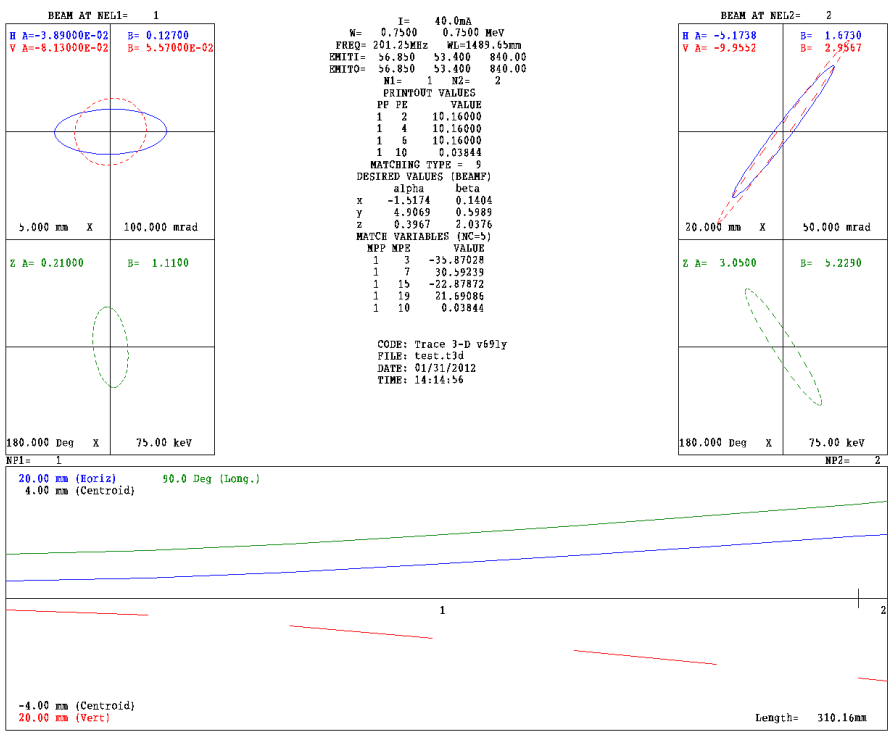

This is what is expected

Observation at low RF Power (110 kW)

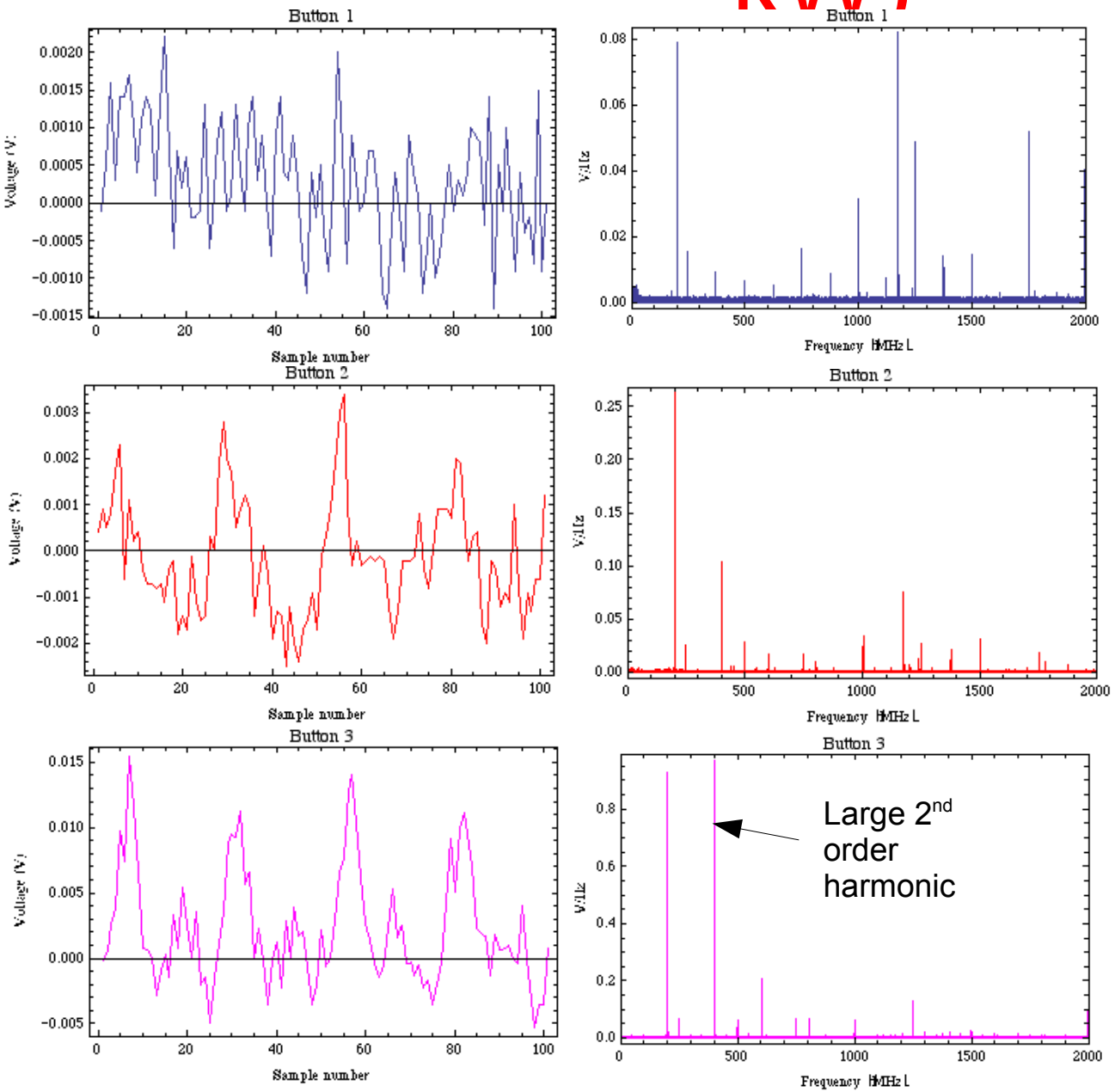

Notice that 200 MHz line is VERY SMALL! Comparable to noise level. See next slide for 180 kW for comparison

Probably no bunching at this power level.

First 201.25 MHz observation at 130 kW

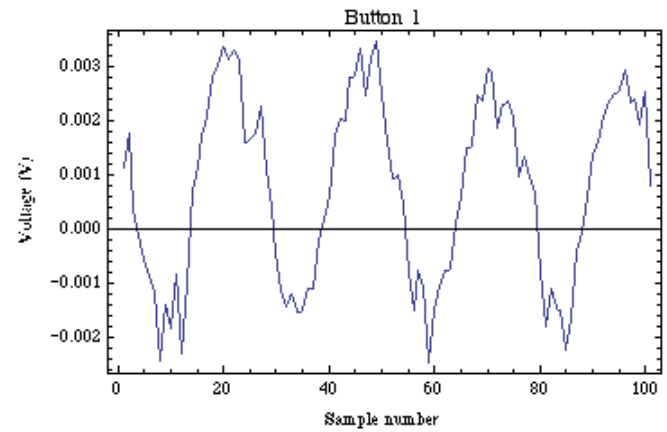

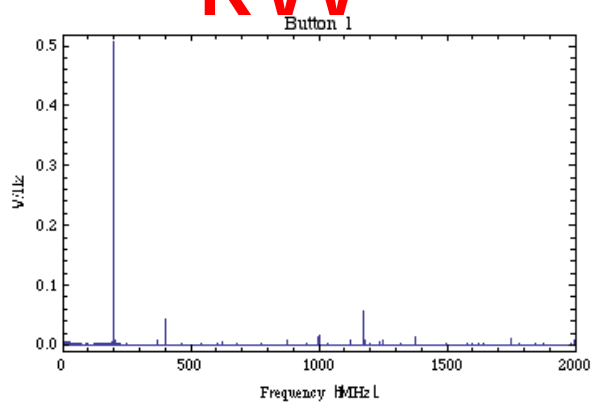

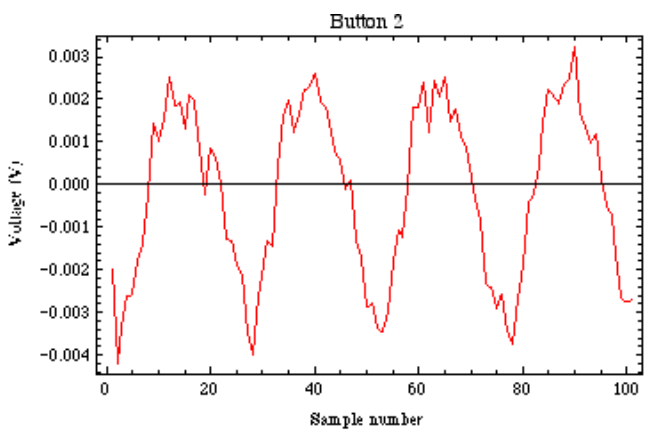

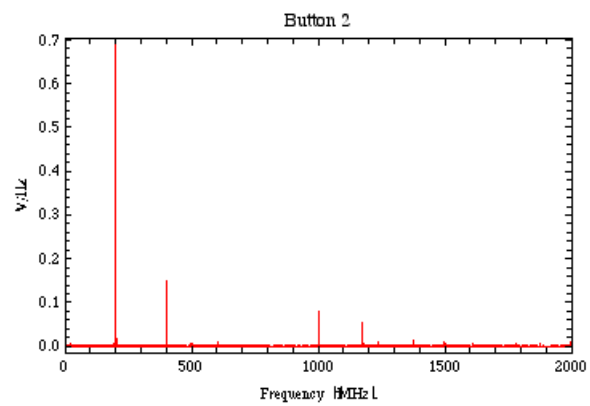

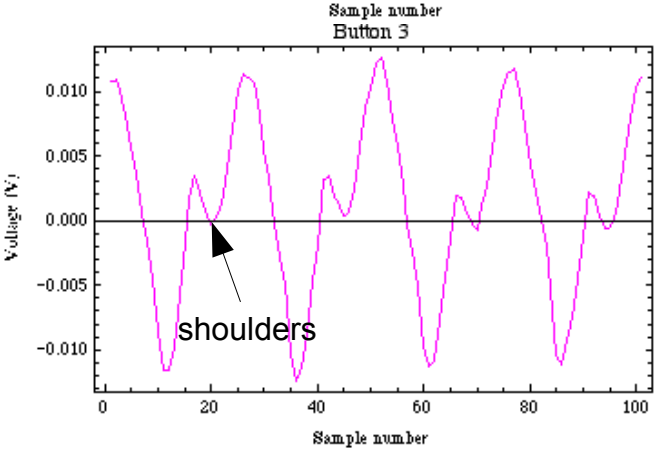

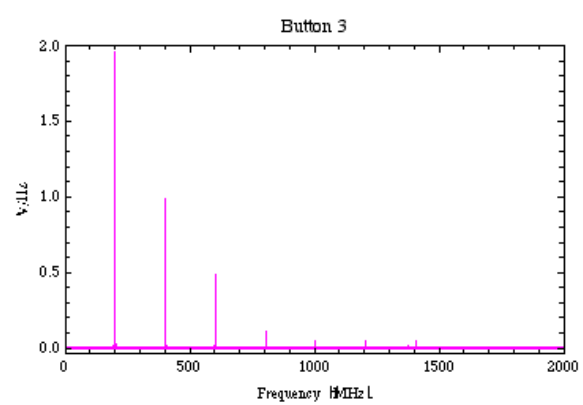

Shoulders appear on button 3. Looks like bunching is not perfect here. Note size of 2nd harmonic of button 3.

As power increases shoulder disappears.

Good indication of bunching would be ratio of 2nd harmonic/1st harmonic

Observation at 180 kW

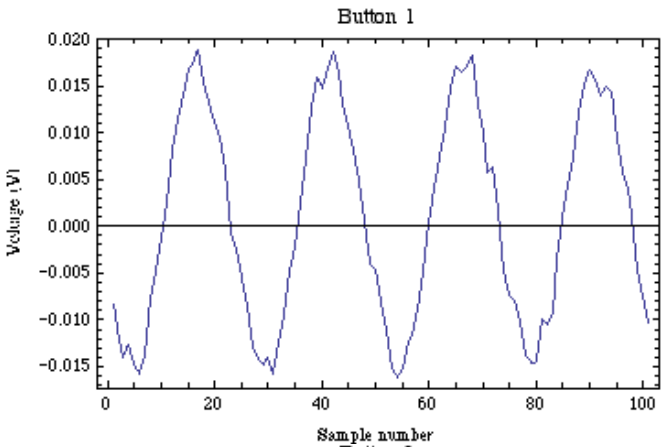

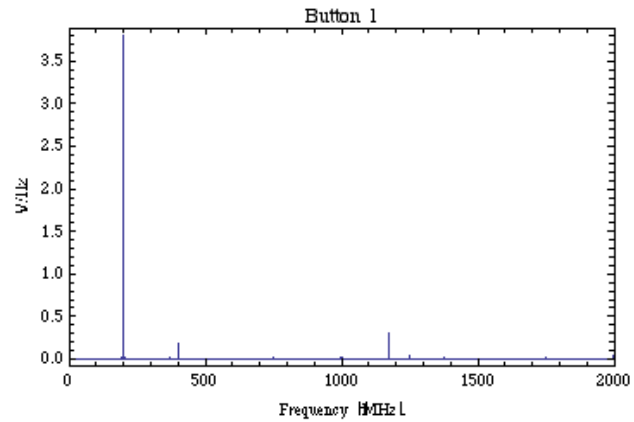

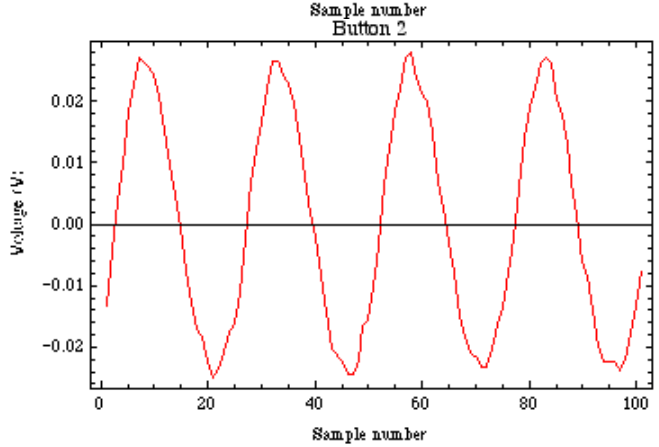

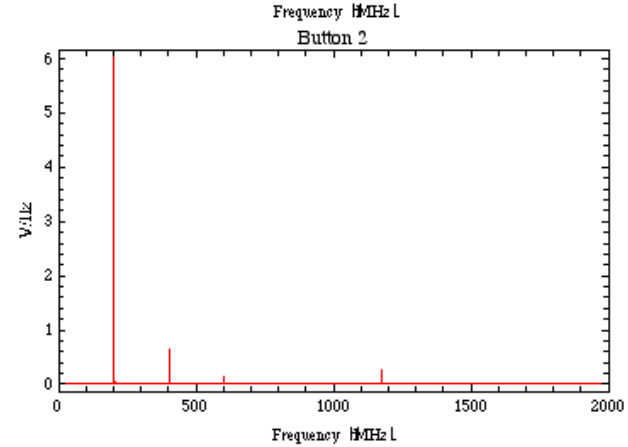

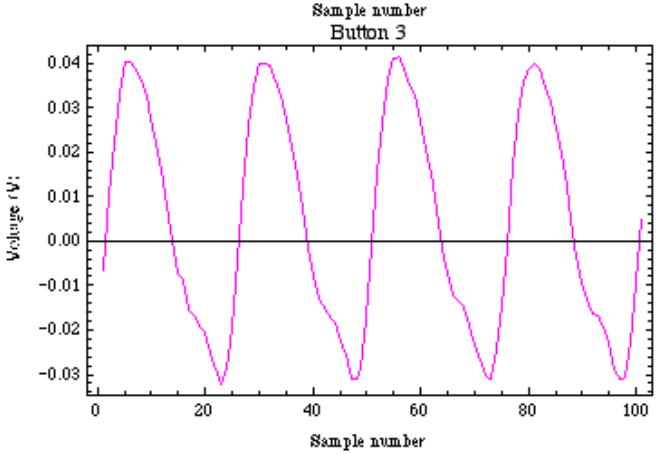

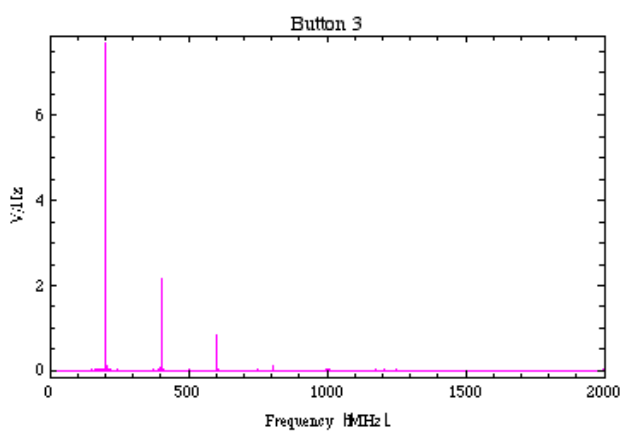

Note that 2nd harmonic is smaller now and clear 201.25 MHz line

Beam Distortion

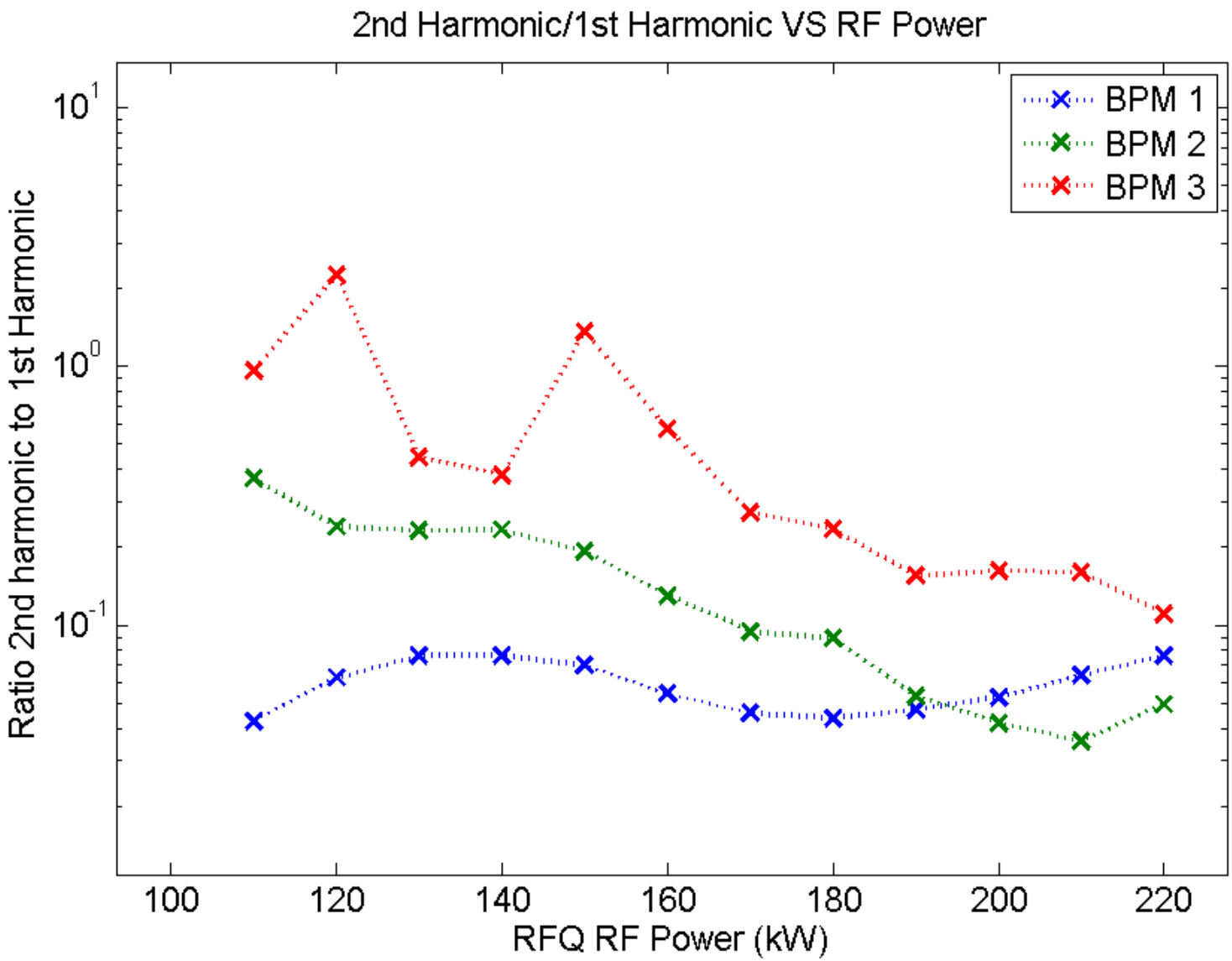

H- Energy as function of RFQ Power

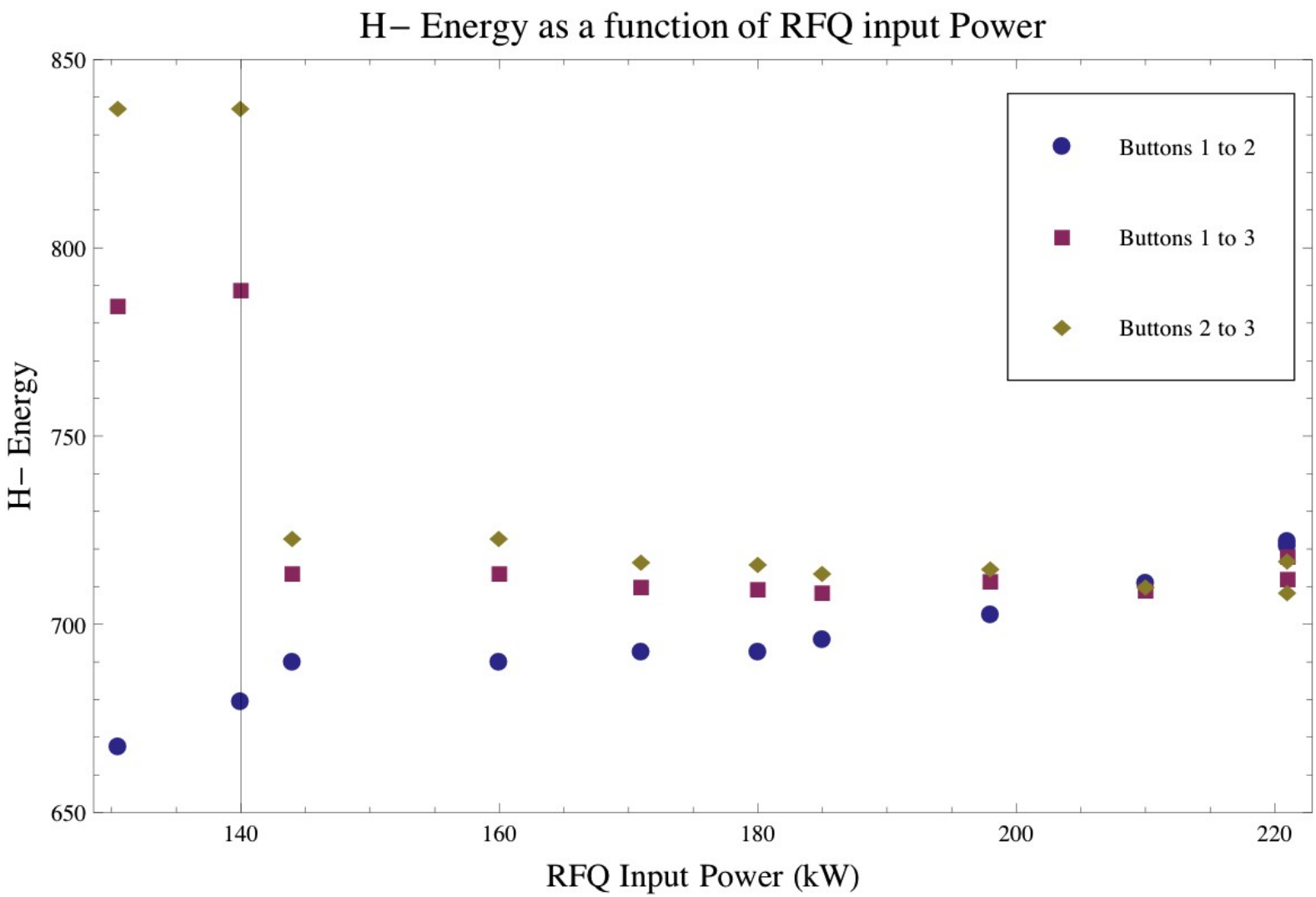

Fast Faraday Cup Set up

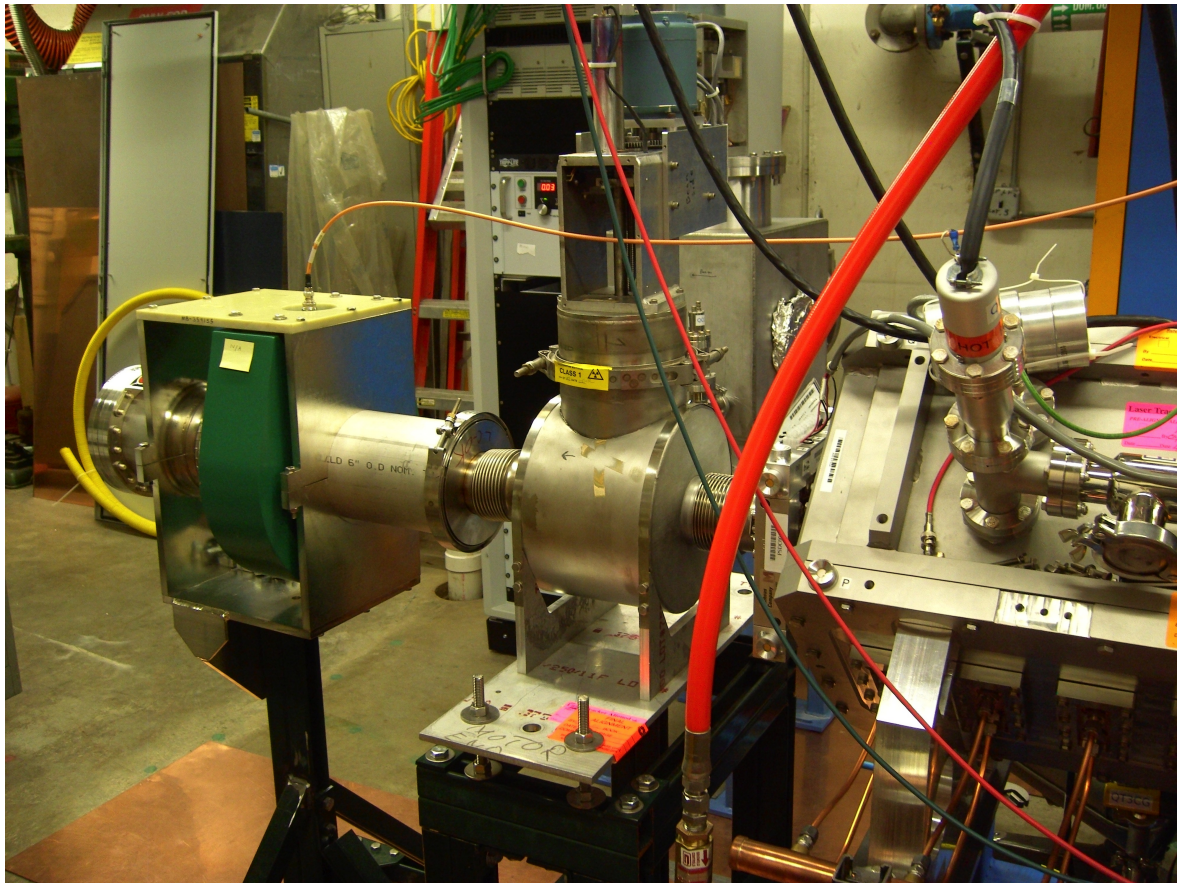

This is a fast Faraday Cup designed by C. Deibele (SNS). See Fast Faraday Cup.

Bandwidth ~15 – 20 GHz.

HP scope is 6 GHz BW.

At 187 kW

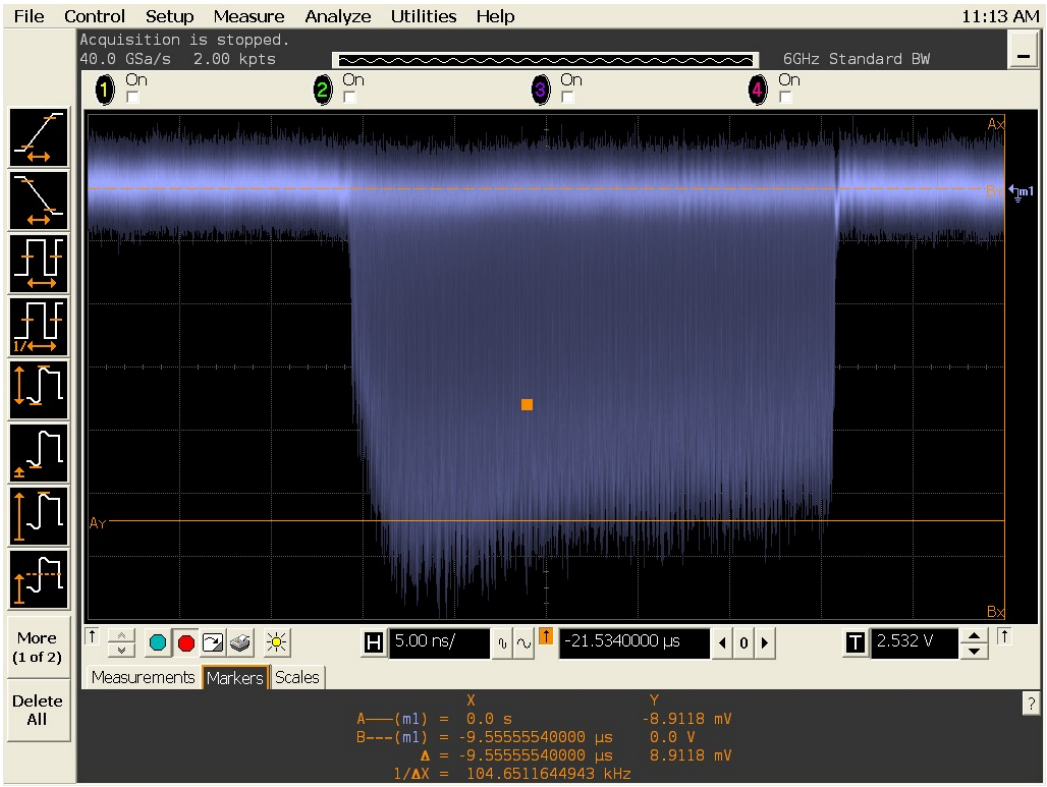

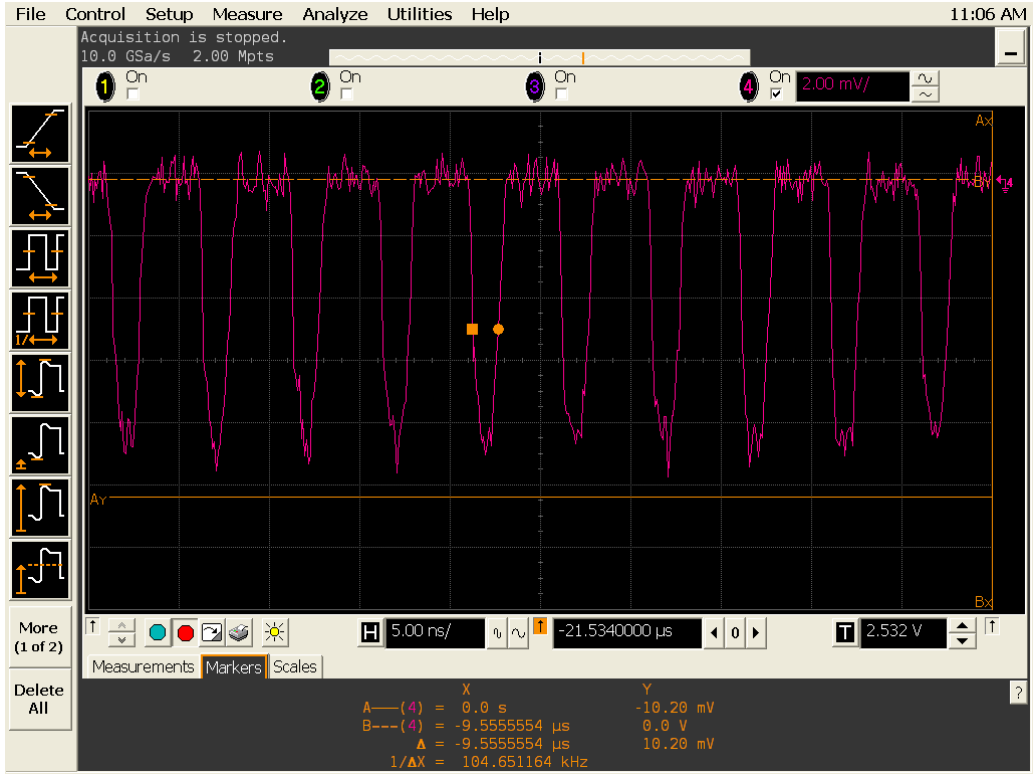

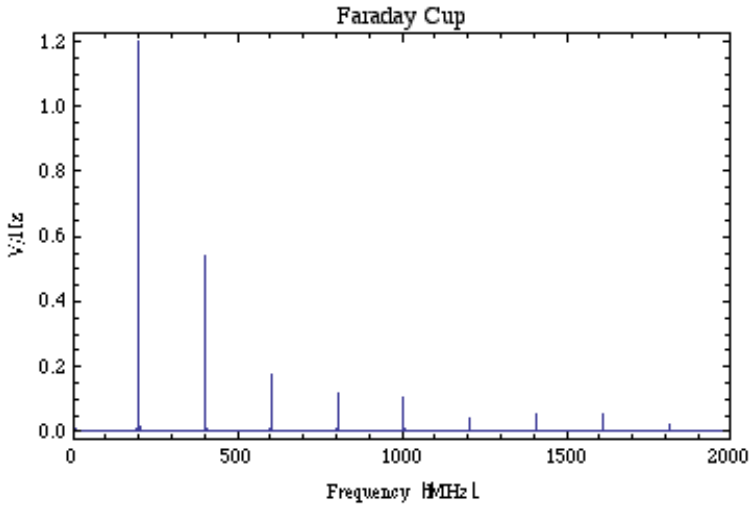

Assuming gaussian beam, the beam sigma is 0.54 ns.

(This uses formula from:

http://beamdocs.fnal.gov/AD-public/DocDB/ShowDocument?docid=3214. Note for parabolic beam, see

https://beamdocs.fnal.gov/AD-private/DocDB/ShowDocument?docid=1986)

150 kW

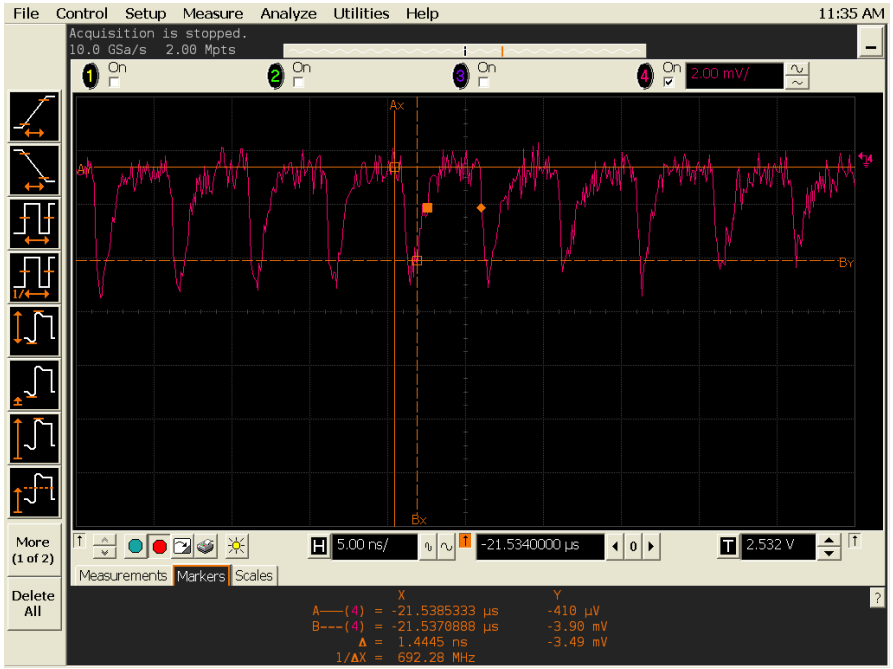

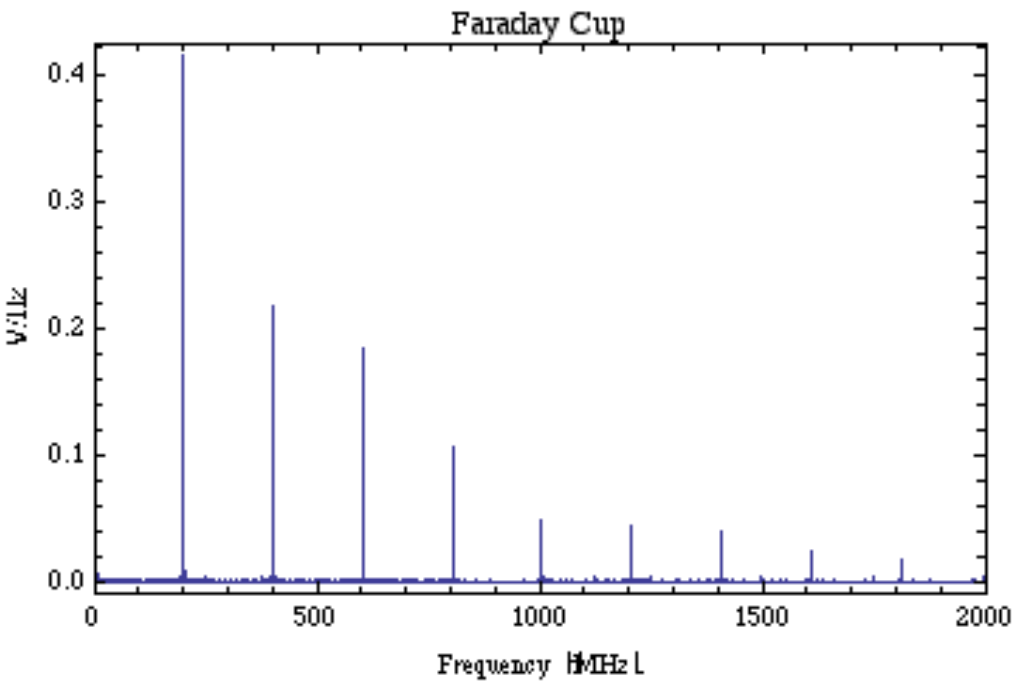

Bunches are assymmetric and **not** gaussian.

130 kW

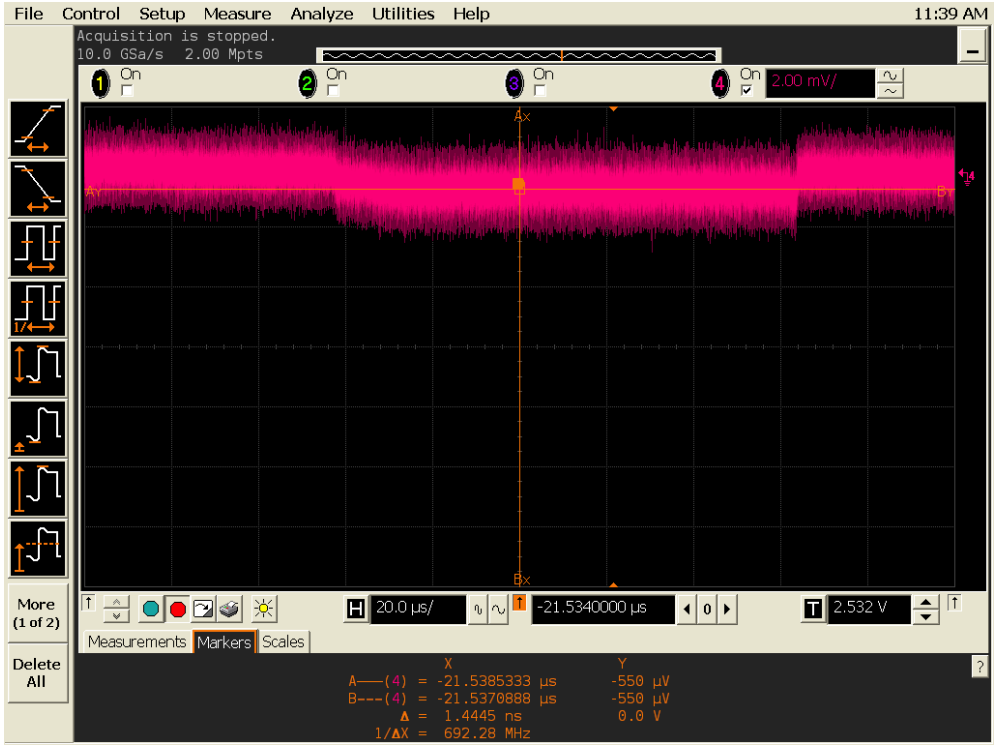

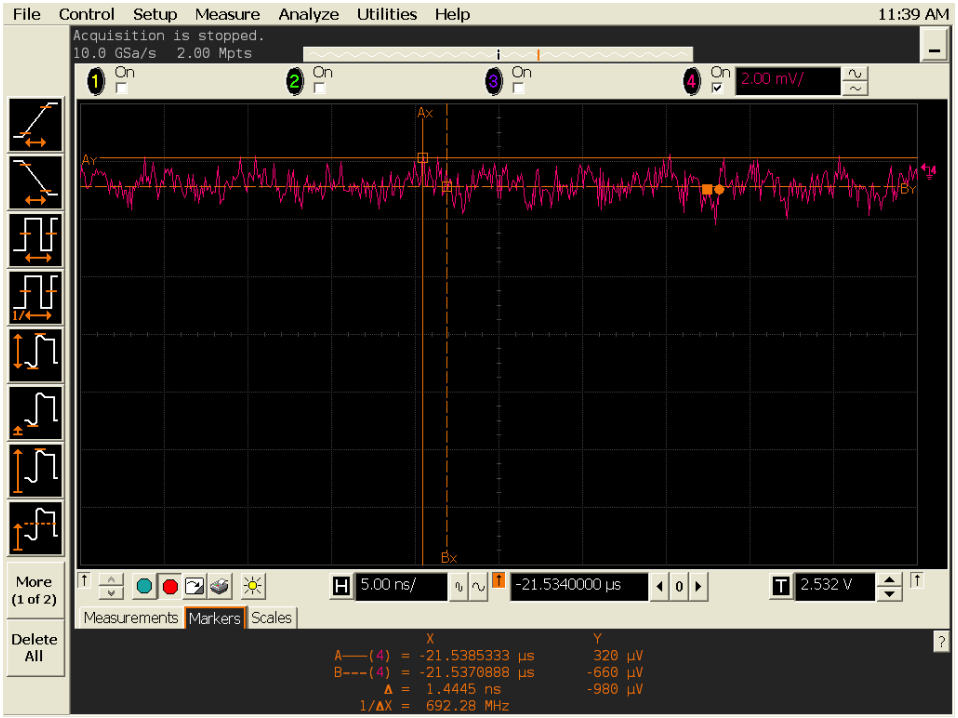

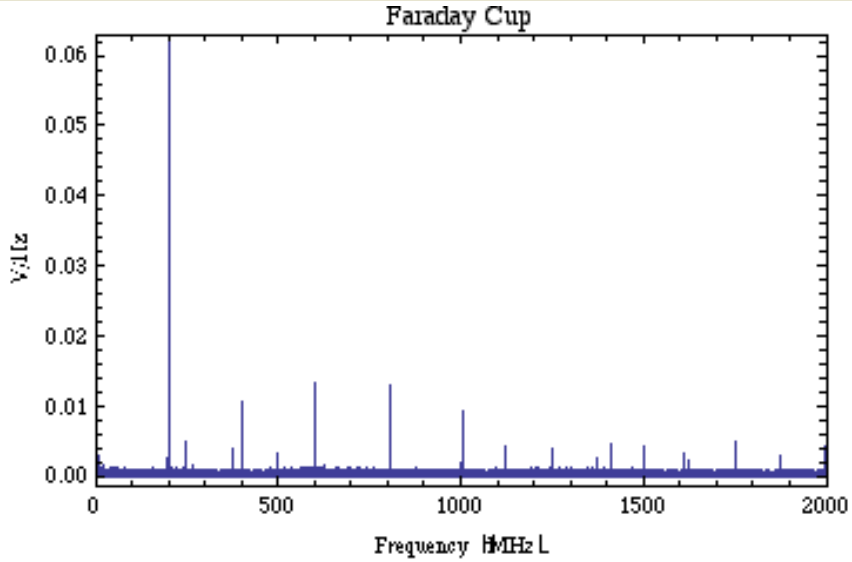

200 MHz harmonic is very small. Beam is not bunched.

Test area, test stand and instrumentation

Device	Status	Comments
emittance probes can	swapped arms	Check to see if horz and vert probes give the same results

Controls

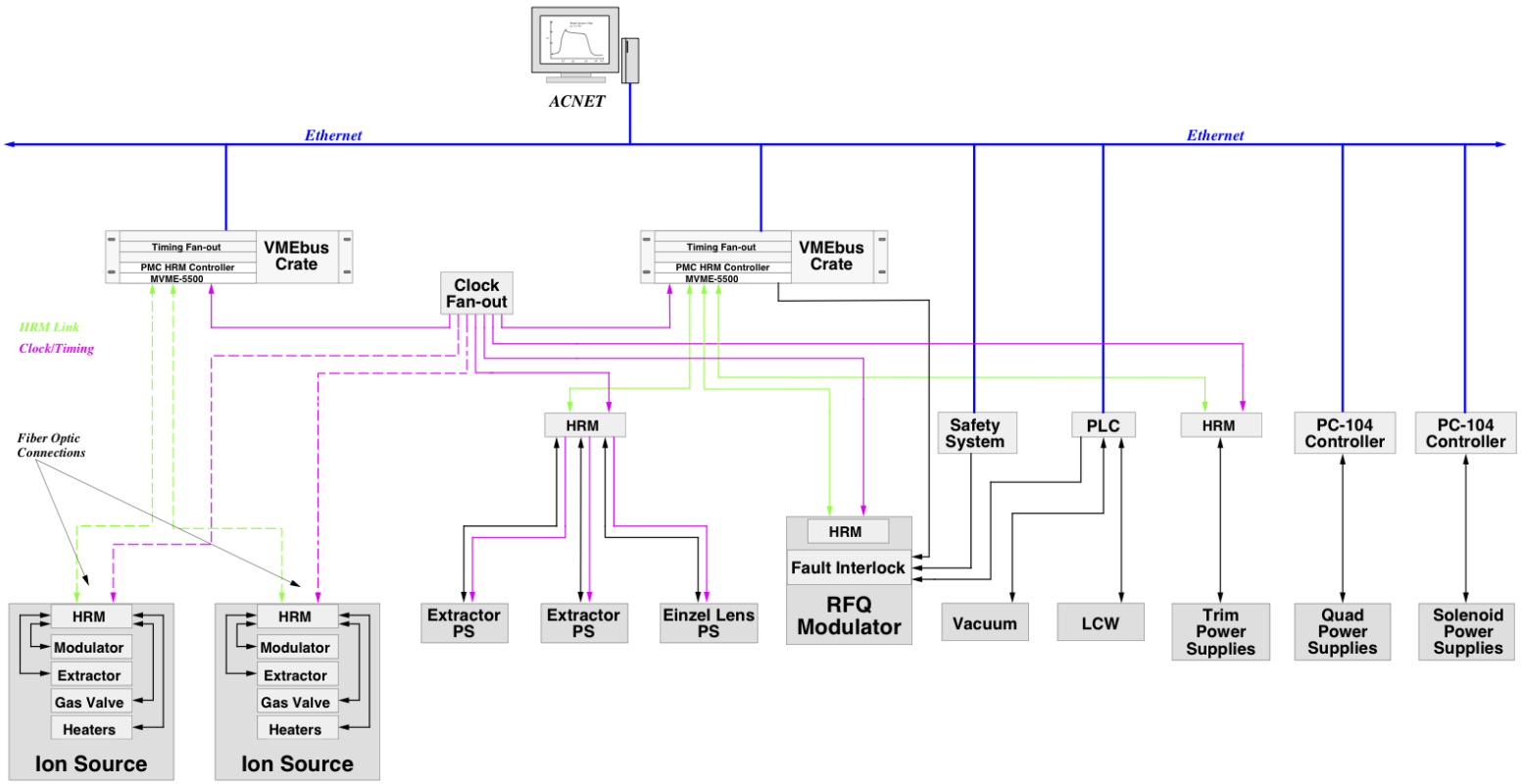

Linac RFQ Upgrade Controls Block Diagram

Controls

-

Safety