Pre-injector Upgrade Updates (11 Apr 2012 – 25 Apr 2012)

C.Y. Tan
25 Apr 2012

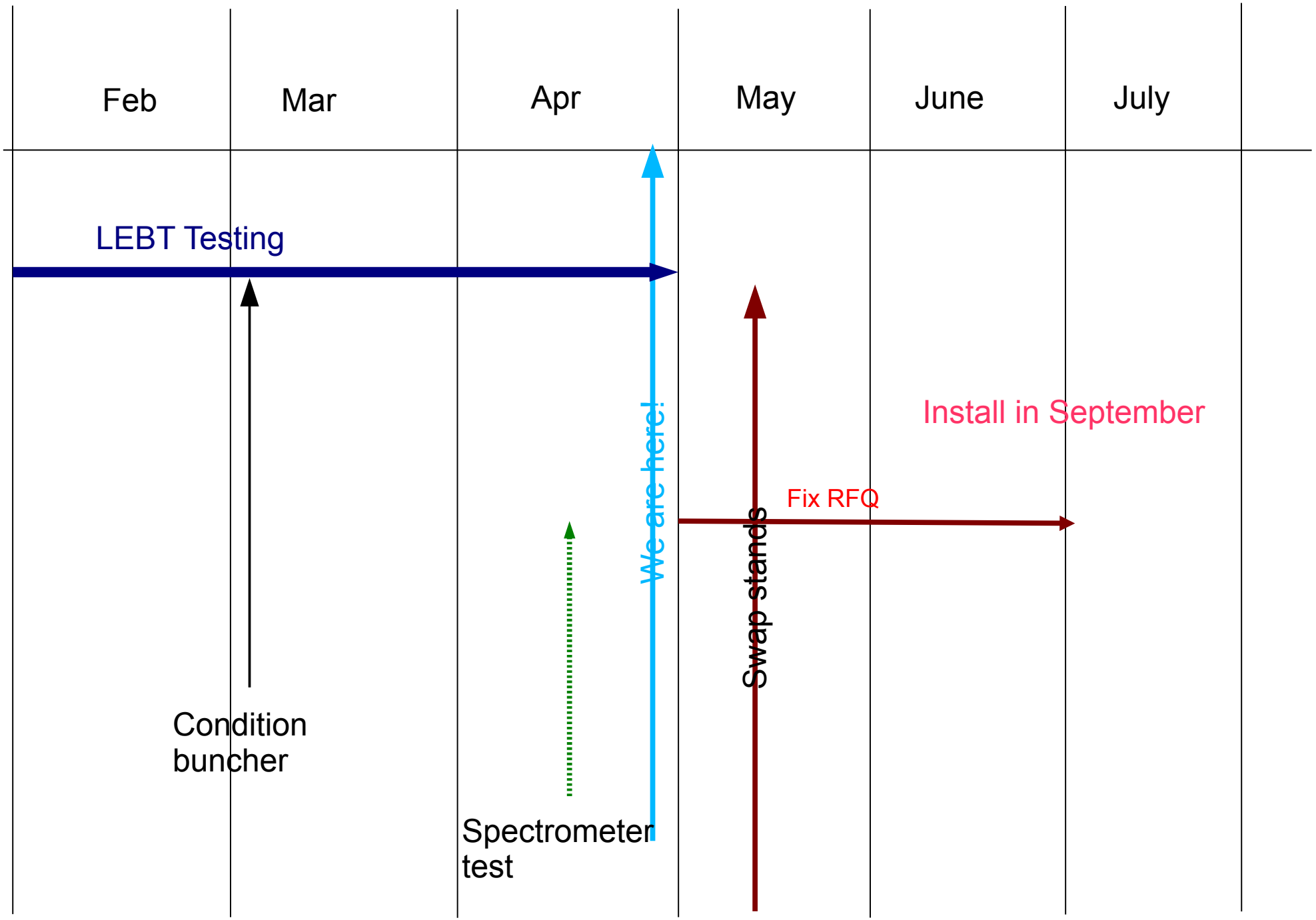
Feb
Mar
Apr
May
June
July
LEBT Testing
We are here!
Install in September
Fix RFQ
Swap stands
Condition buncher
Spectrometer test

Plans

- Complete buncher conditioning.

REV	DESCRIPTION	DRAWN	DATE
		APPROVED	DATE

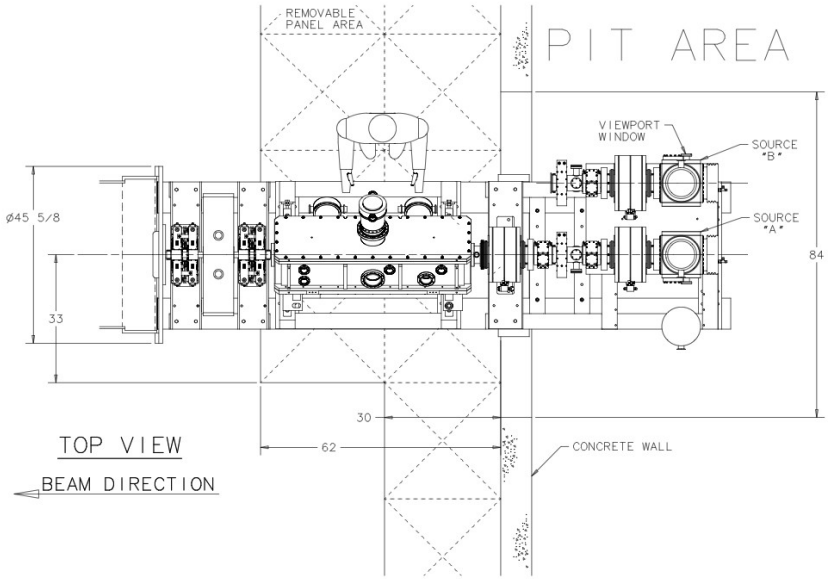

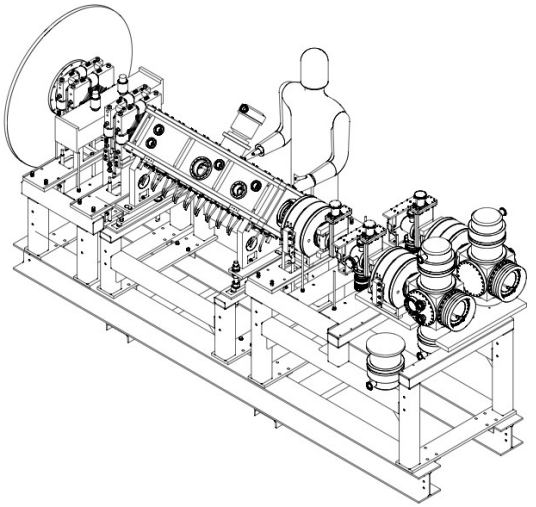

Really? Measured 47”

If we use 8” I beam, we will be >= 47.5” high

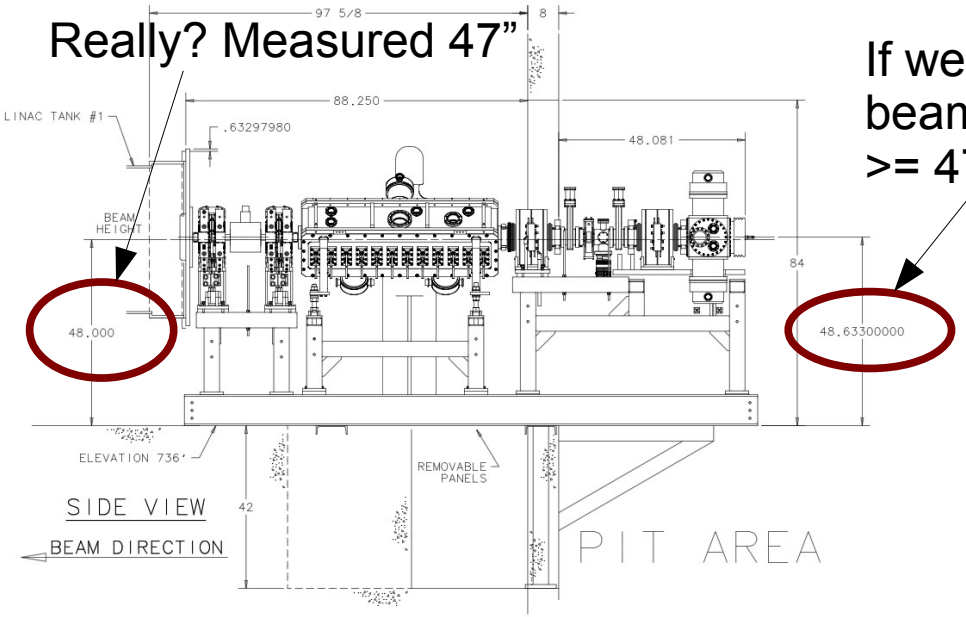

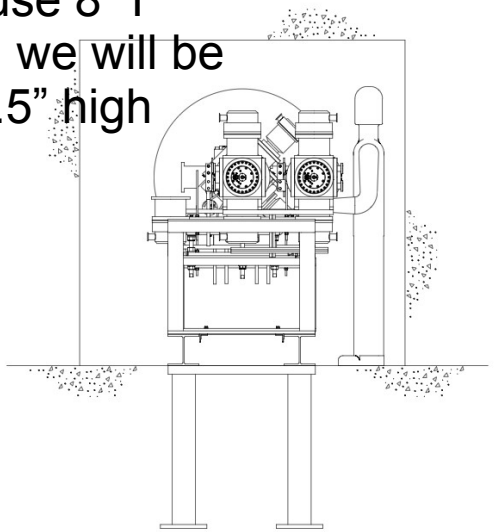

PREACCELERATOR PRELIMINARY LAYOUT

APRIL 27, 2011

UNLESS OTHERWISE SPECIFIED	ORIGINATOR	
± ± ±	DRAWN	
	CHECKED	
1. BREAK ALL SHARP EDGES .MAX.	APPROVED	
2. DO NOT SCALE DRAWING. 3. DIMENSIONS BASED UPON ASME Y14.5M-1994 4. MAX. ALL MACH. SURFACES	USED ON	
5. DRAWING UNITS: U.S. INCH	MATERIAL	

FERMI NATIONAL ACCELERATOR LABORATORY
UNITED STATES DEPARTMENT OF ENERGY

SCALE	DRAWING NUMBER	SHEET	REV
	. — —	1 OF 1	

CREATED WITH : GROUP :

Created: 10:31:09 on 28-06-11 (D-M-Y) By: mkielar State: 1-INITIAL

LEBT Status

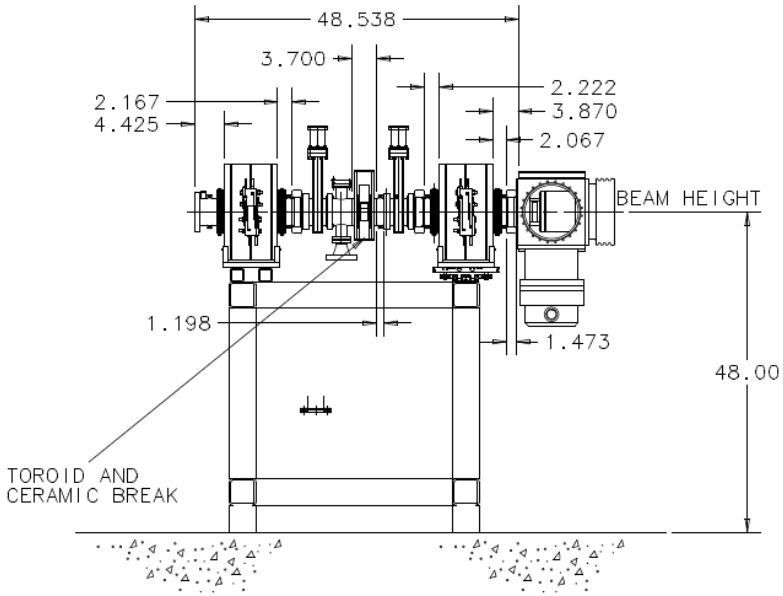

Device	Status	Comments
New slide	being built?	6 weeks to delivery. End of April?

MEBT Status

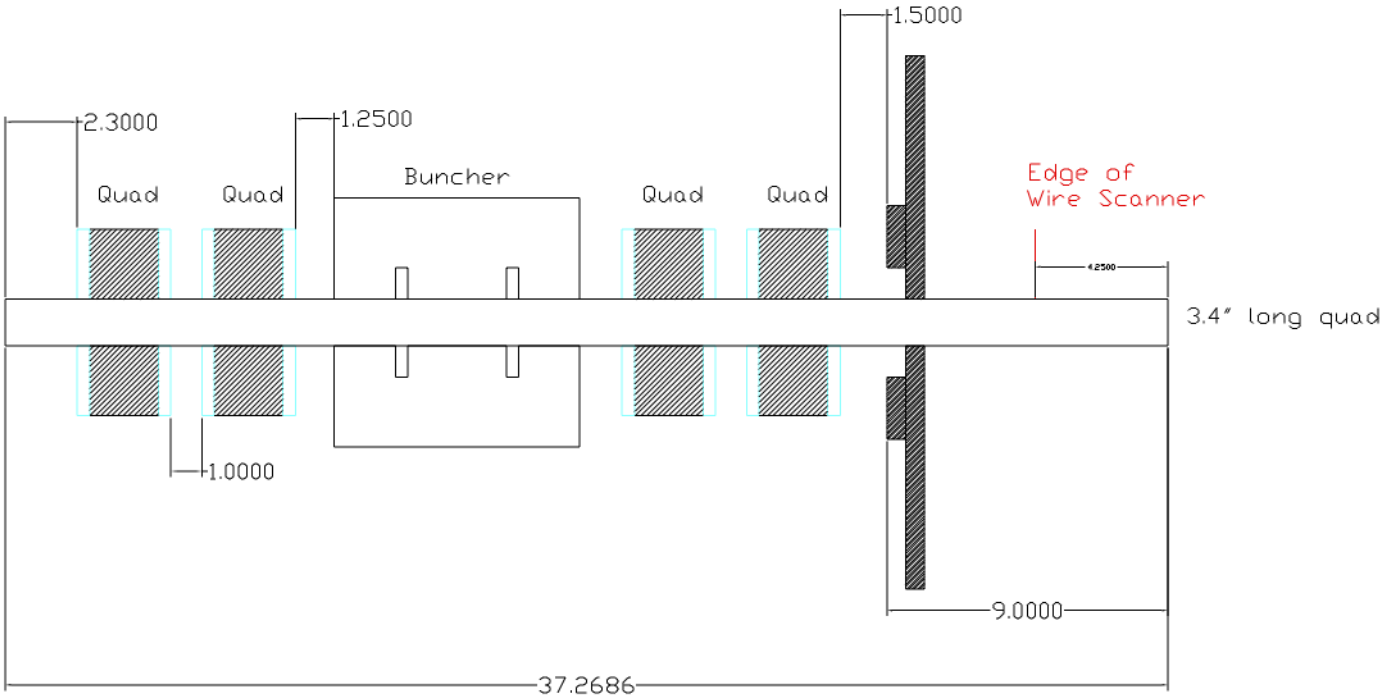

Device	Status	Comments
MEBT Stand	Being designed	Another 2 more weeks (13 Mar)
Quad doublets	Being paired and tested	1st pair done. 2Nd pair is nearly done.
Buncher	ion pump replaced with turbo	vacuum is improving
	power couple brazing problems	Might need to make new wire for antenna

Buncher vacuum

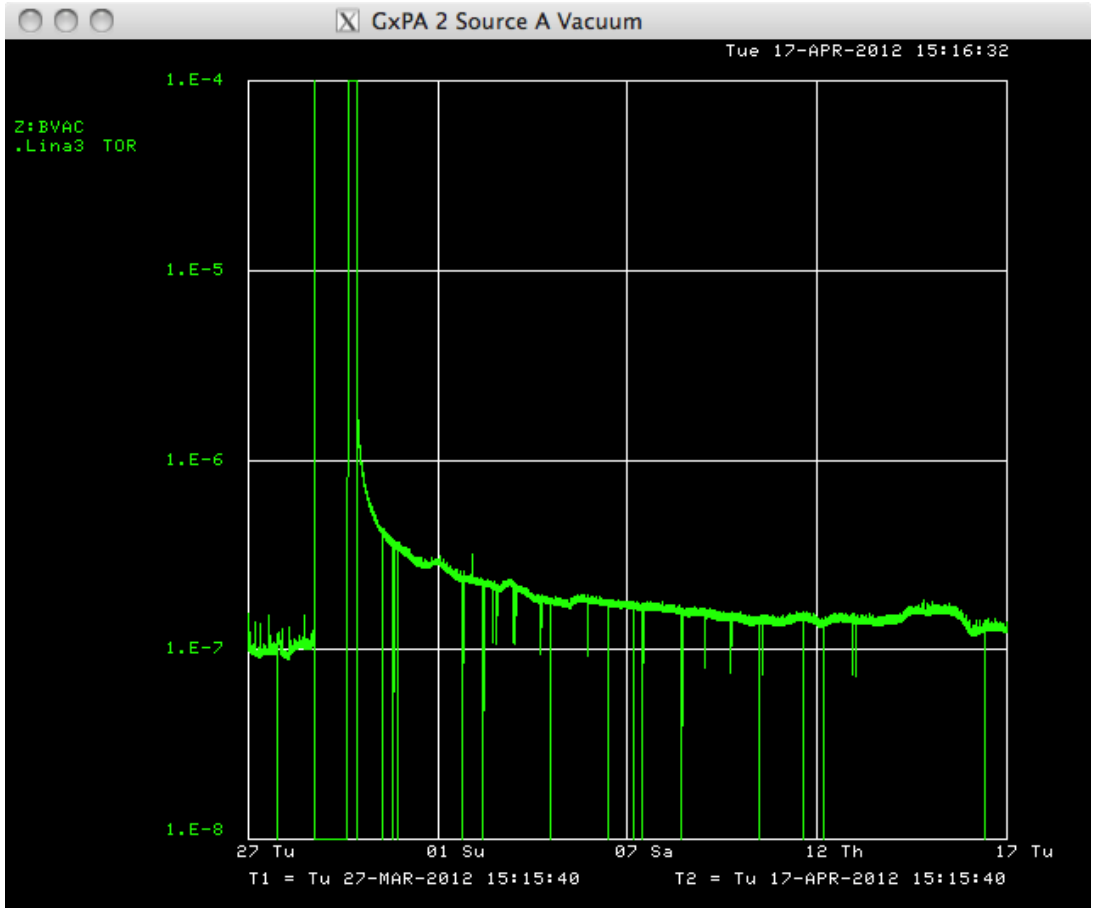

No more large spikes.
~1.3e-7 after 2.5 weeks of pumping.

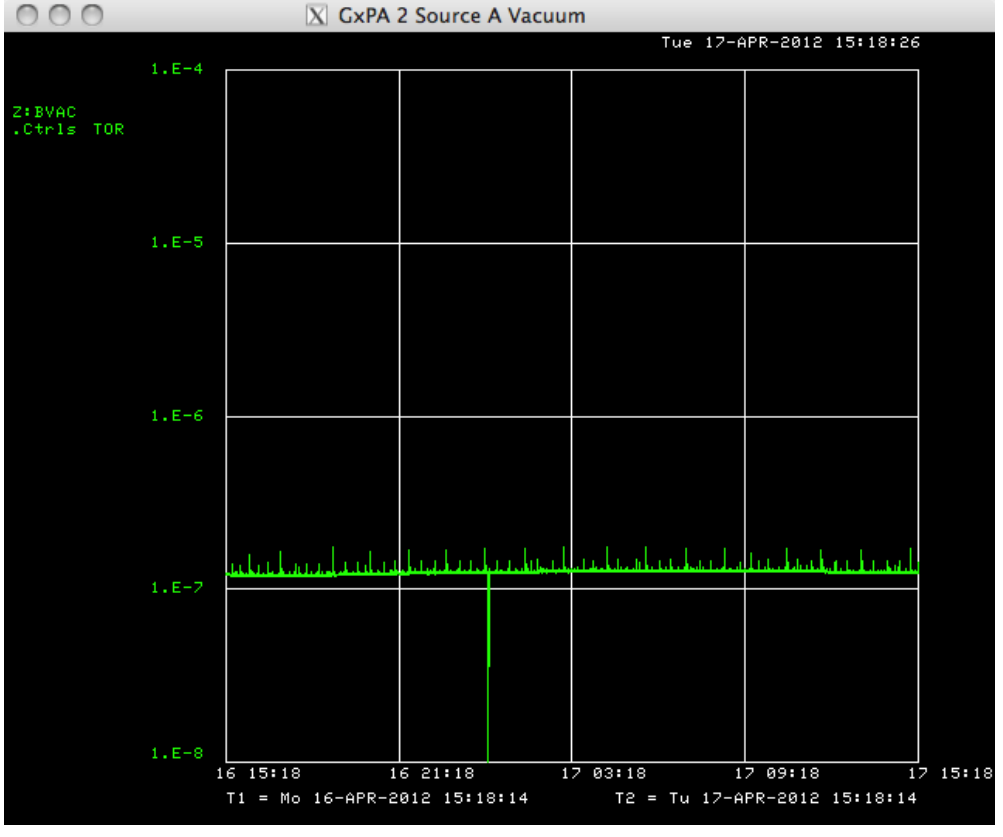

RFQ Status

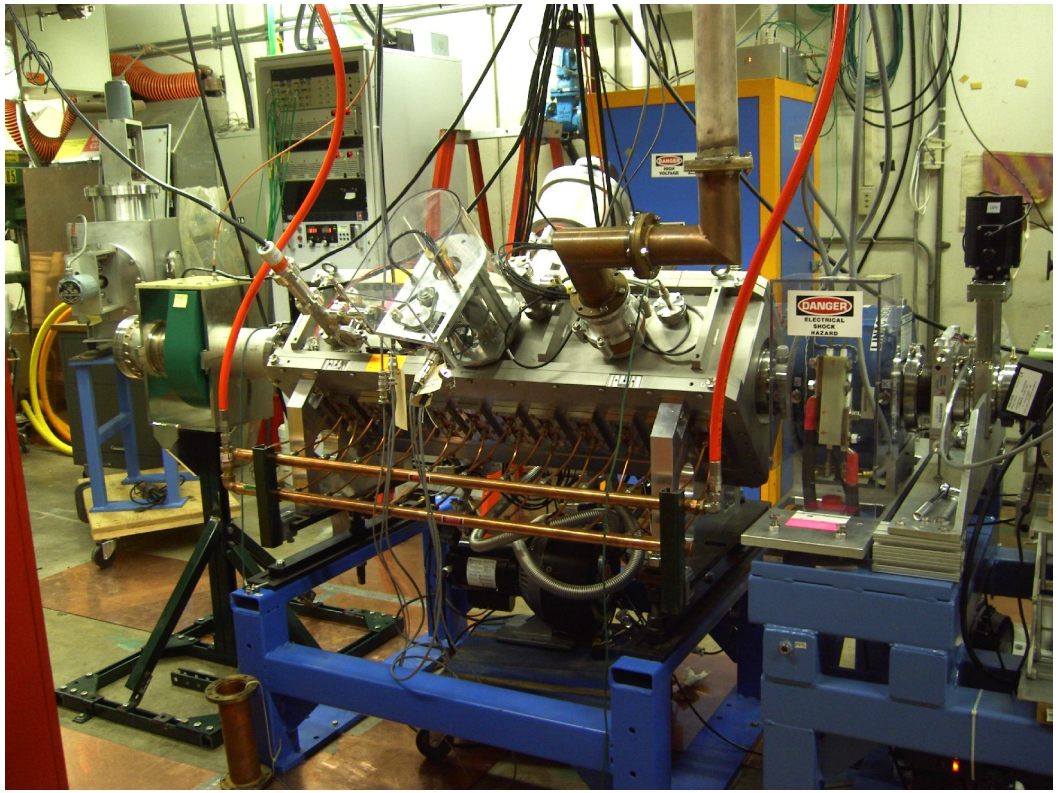

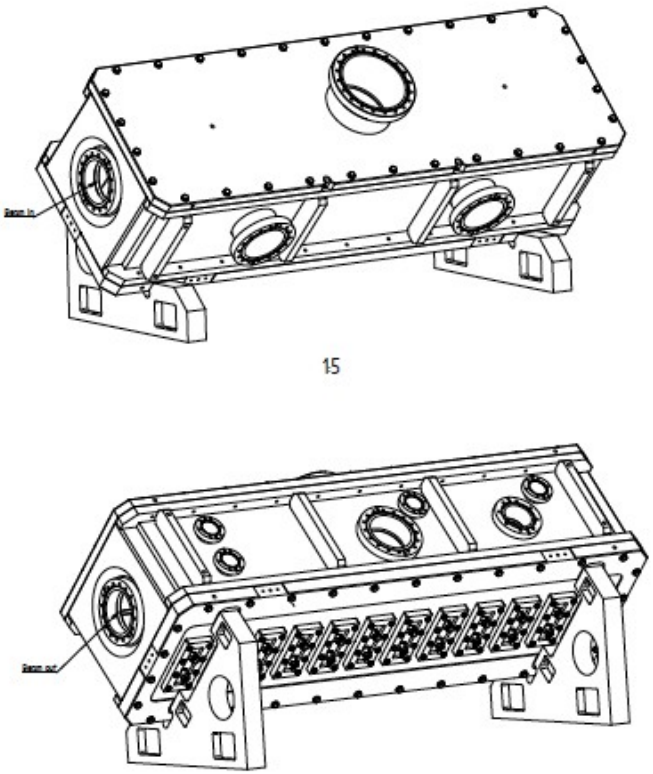

Device	Status	Comments
PLL work	Testing started	
RFQ	Energy measured with BPM wires	Same low energy of ~700 keV

Source of rod warping?

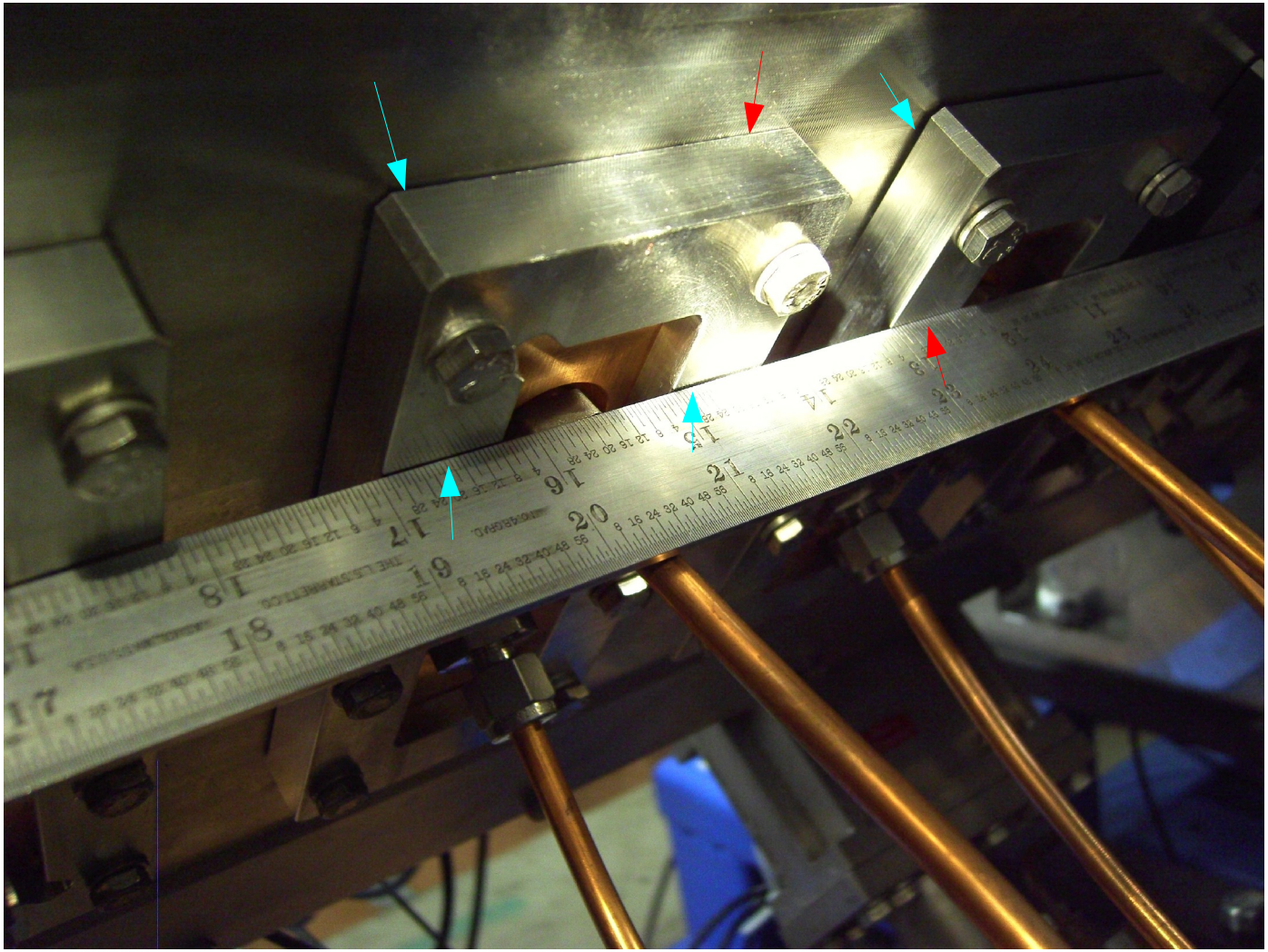

Gaps

No gaps

Test area, test stand and instrumentation

Device	Status	Comments
spectrometer	Spectrometer assembled and works!	Confirms TOF measurements.

Spectrometer

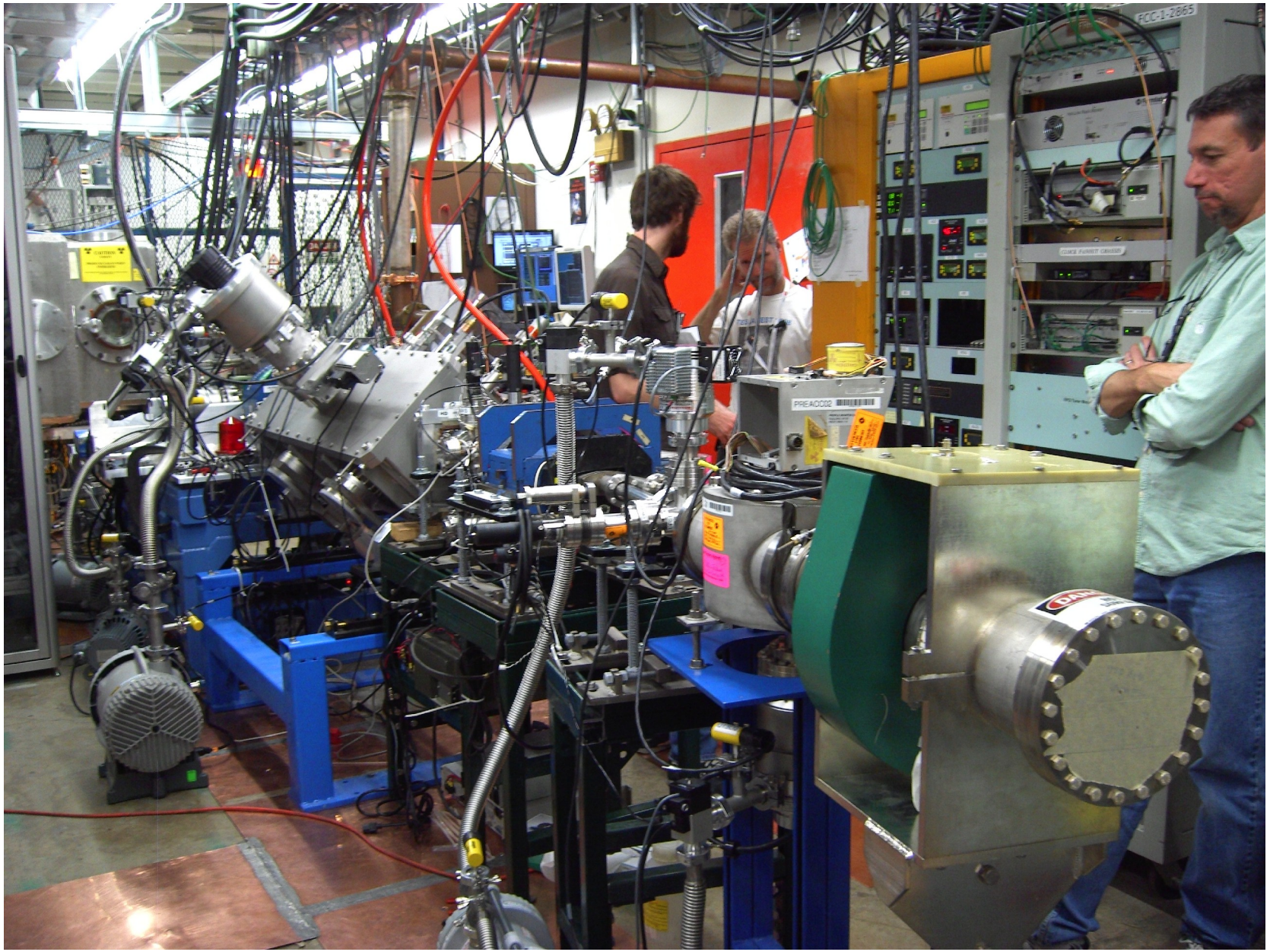

Controls

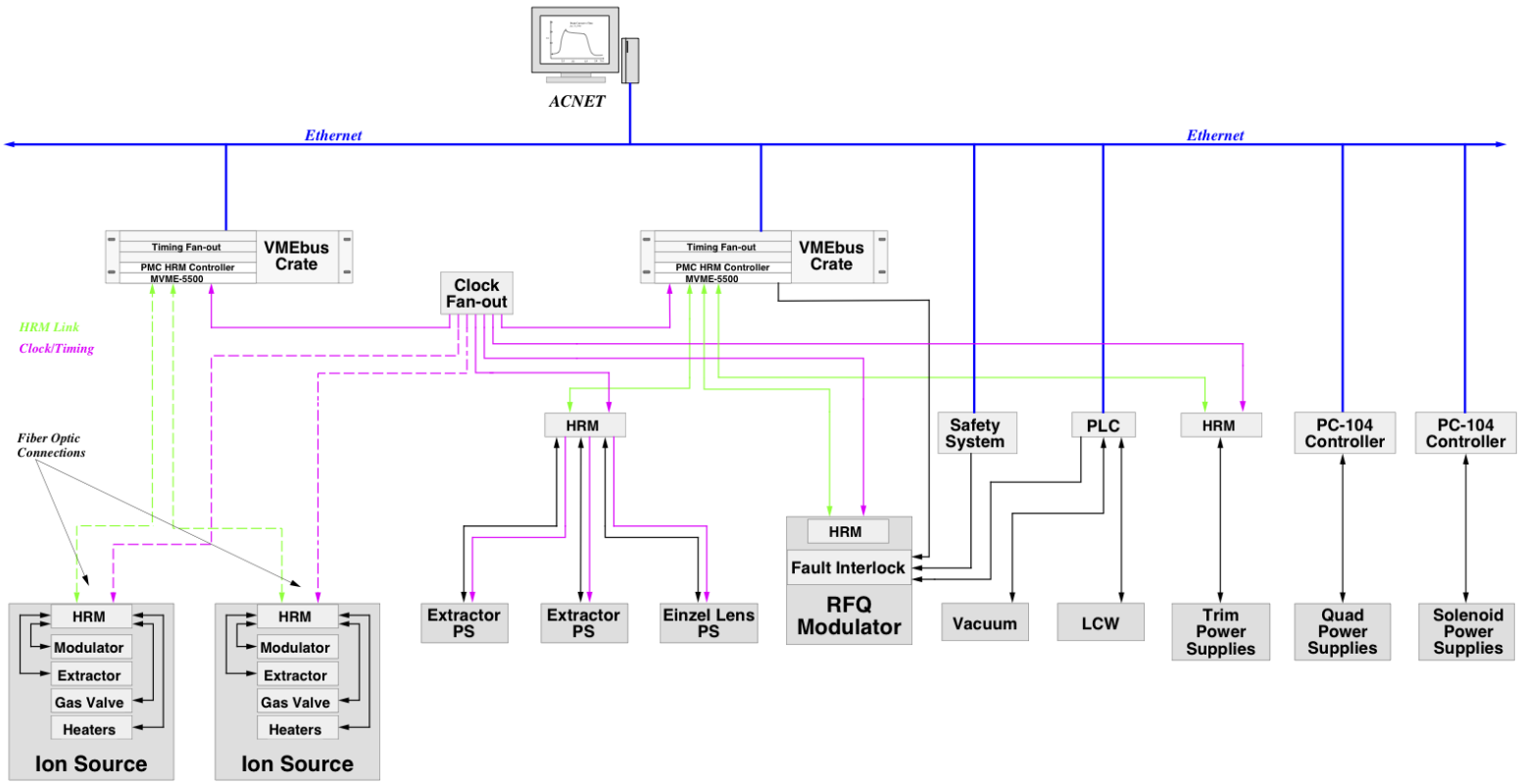

Linac RFQ Upgrade Controls Block Diagram

Controls

-

Safety