REV	DESCRIPTION	DRAWN	DATE
		APPROVED	DATE

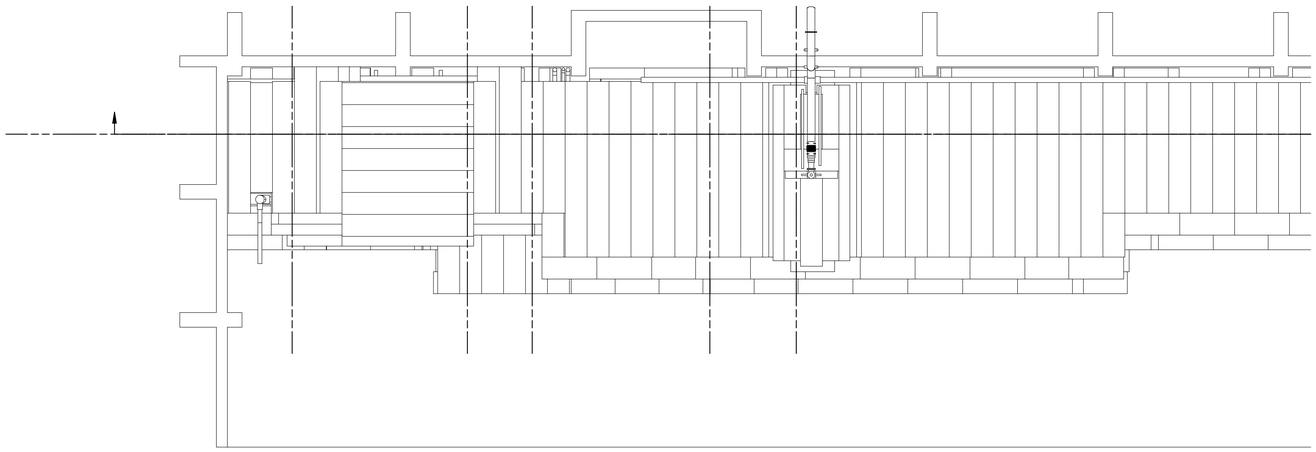

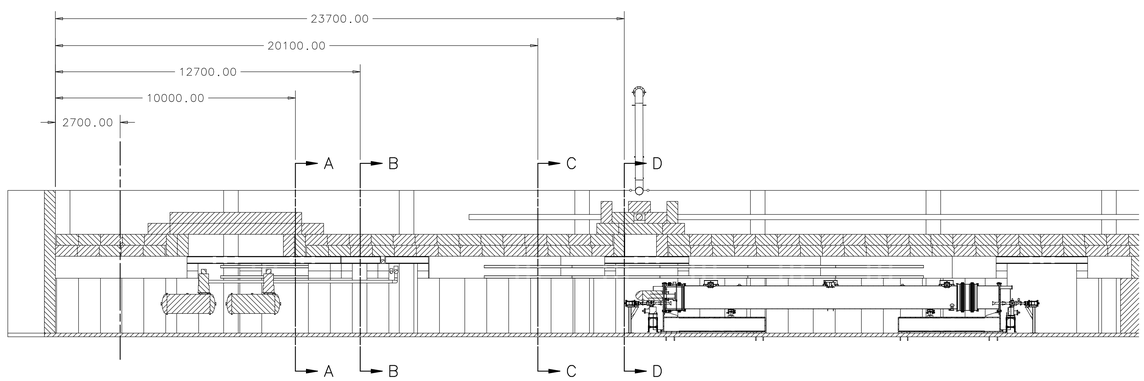

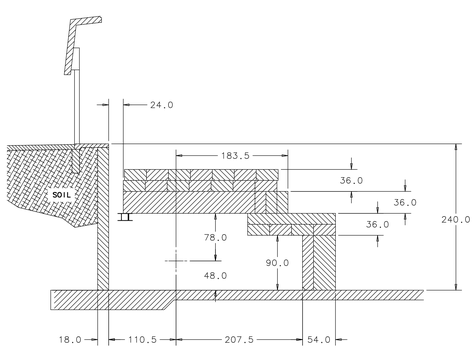

SECTION A-A

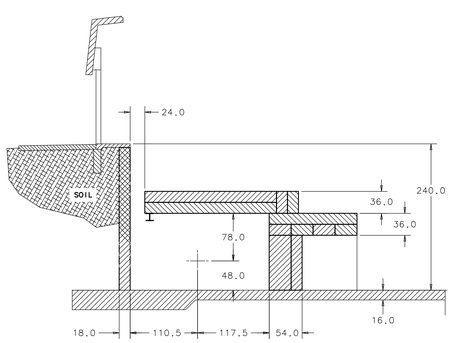

SECTION B-B

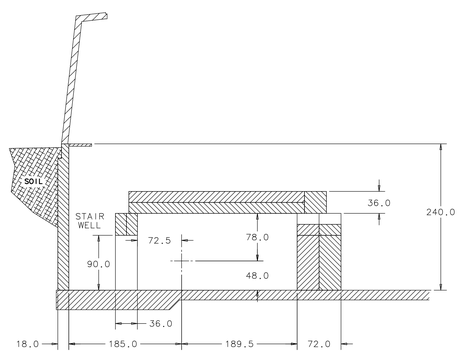

SECTION C-C

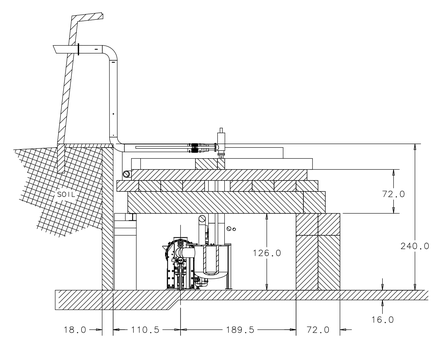

SECTION D-D

UNLESS OTHERWISE SPECIFIED	ORIGINATOR	
	DRAWN	
± ± ±	CHECKED	
1. BREAK ALL SHARP EDGES MAX.	APPROVED	
2. DO NOT SCALE DRAWING. 3. DIMENSIONS BASED UPON	USED ON	
4. MAX. ALL MACH. SURFACES	MATERIAL	
5. DRAWING UNITS:		

FERMI NATIONAL ACCELERATOR LABORATORY
UNITED STATES DEPARTMENT OF ENERGY

SCALE	DRAWING NUMBER	SHEET	REV
	. — —	1 OF 1	

CREATED WITH : GROUP:

Created: 15:36:52 on 22-06-12 (D-M-Y) By: wessein State: 1-INITIAL