BOOSTER ACCELERATOR LLRF SYSTEM BLOCK DIAGRAM 10/01/2015
PAGE 1 OF 2
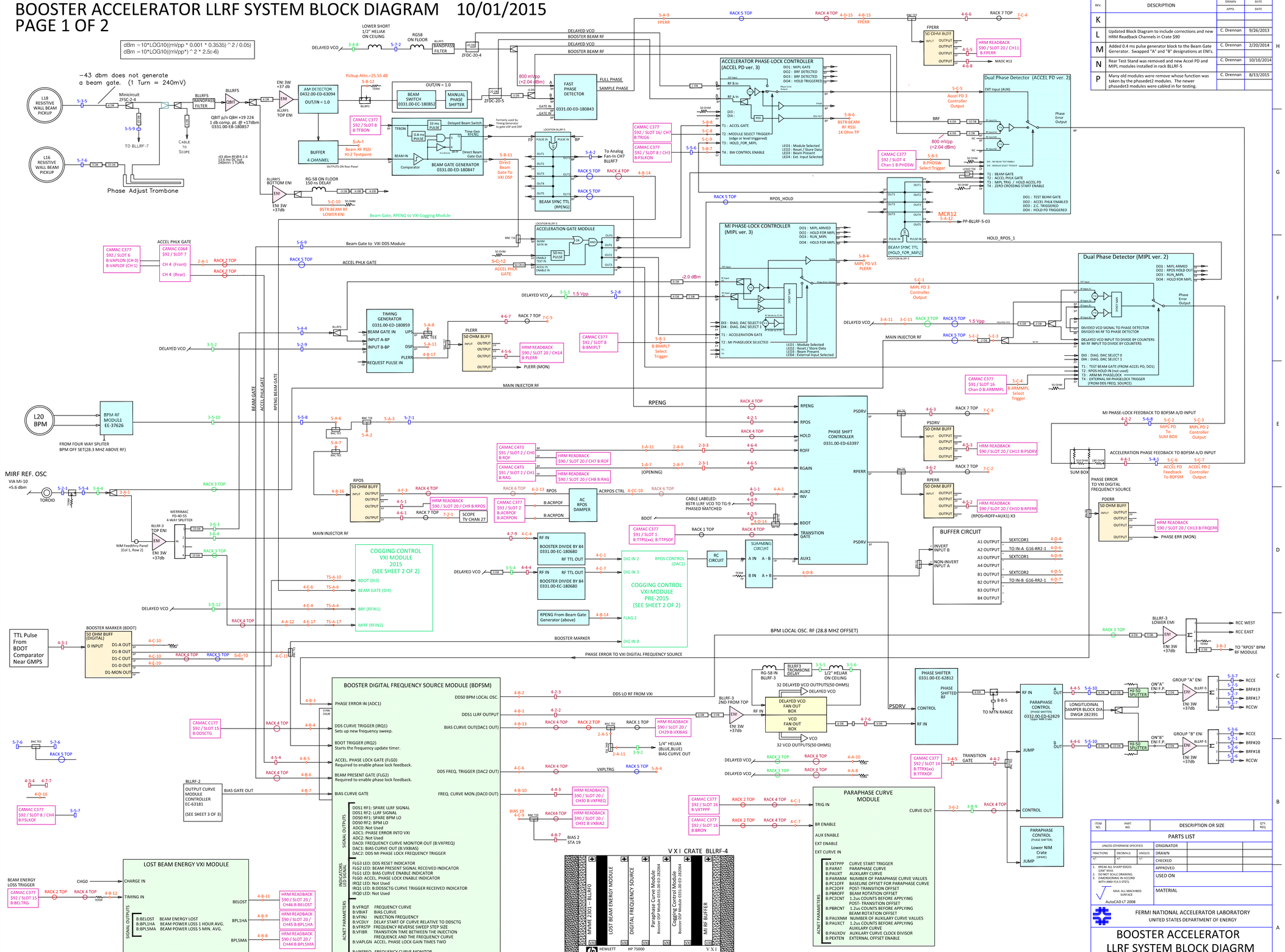
REV.	DESCRIPTION	DRAWN / APPD.	DATE / DATE
K			
L	Updated Block Diagram to include corrections and new HRM Readback Channels in Crate S90	C. Drennan	9/26/2013
M	Added 0.4 ms pulse generator block to the Beam Gate Generator. Swapped "A" and "B" designations at EMI's.	C. Drennan	2/20/2014
N	Rear Test Stand was removed and new Accel PD and MIPL modules installed in rack BLLRF-5	C. Drennan	10/10/2014
P	Many old modules were remove whose function was taken by the phasedet2 modules. The newer phasedet3 modules were cabled in for testing.	C. Drennan	8/13/2015