REV.	DESCRIPTION	DRAWN	DATE
		APPD.	DATE

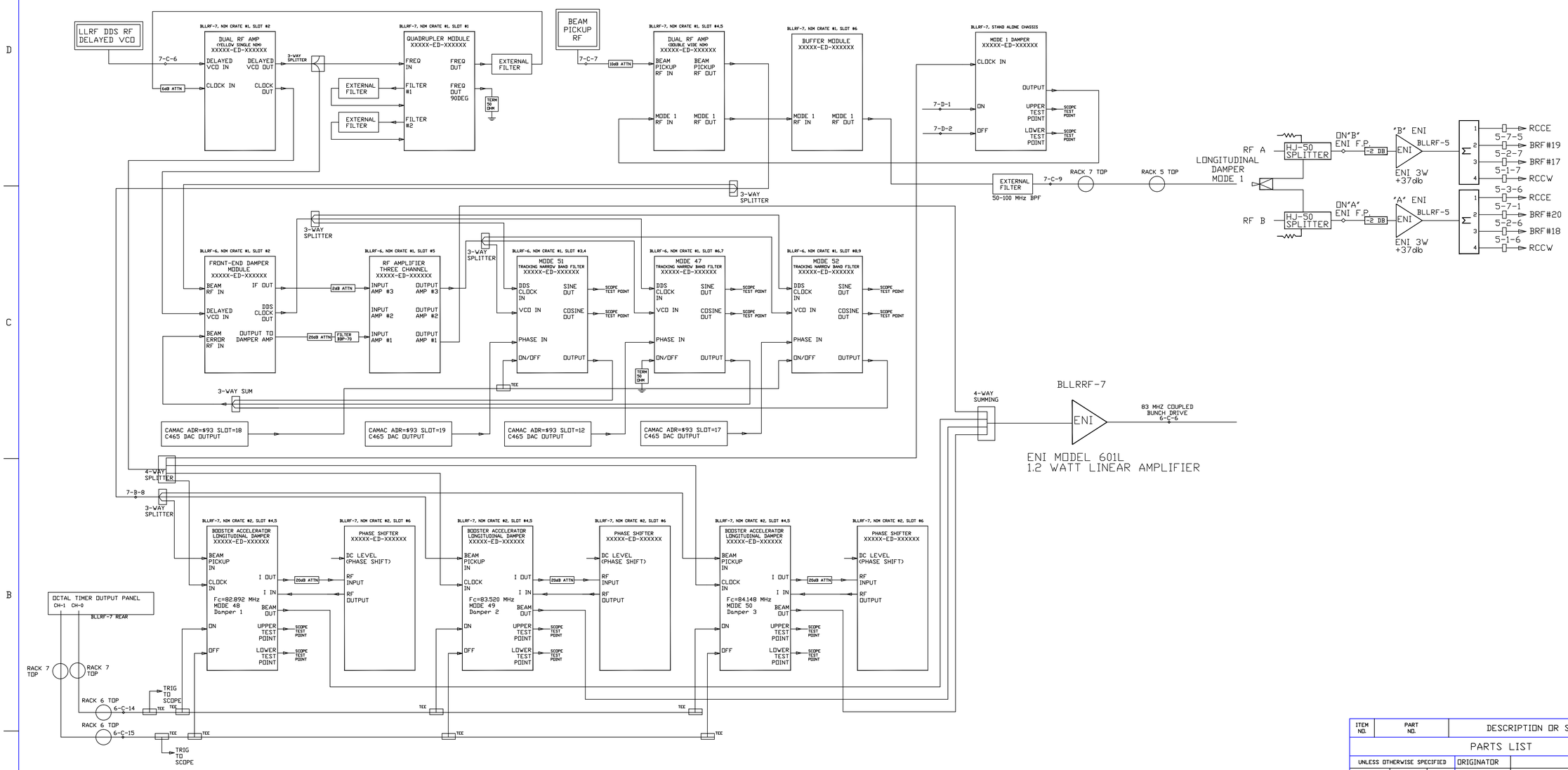

ITEM NO.	PART NO.	DESCRIPTION OR SIZE	QTY. REQ.
PARTS LIST			

UNLESS OTHERWISE SPECIFIED			ORIGINATOR		
FRACTIONS	DECIMALS	ANGLES	DRAWN		
+/-	+/-	+/-	CHECKED		
			APPROVED		
			USED ON		
			MATERIAL		

1. BREAK ALL SHARP EDGES 1/64" MAX.
2. DO NOT SCALE DRAWING.
3. DIMENSIONING IN ACCORD WITH ANSI Y14.5 STD'S.

MAX. ALL MACHINED SURFACE

AutoCAD LT 2008

FERMI NATIONAL ACCELERATOR LABORATORY
UNITED STATES DEPARTMENT OF ENERGY

FERMI NATIONAL ACCELERATOR LAB LONGITUDINAL DAMPER BLOCK DIA.

SCALE	FILMED	DRAWING NUMBER	REV.

REV.	DESCRIPTION	DRAWN	DATE
		APPD.	DATE

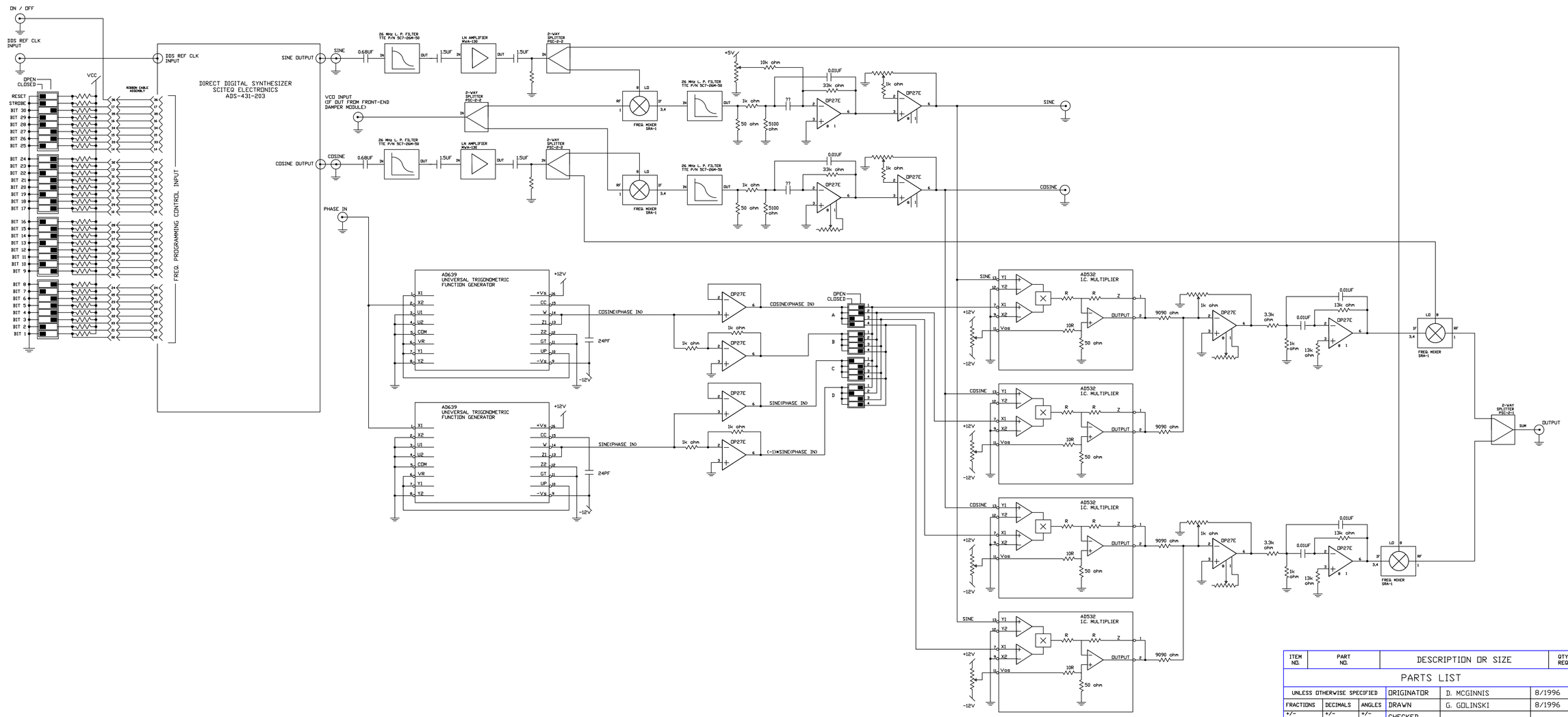

ITEM NO.	PART NO.	DESCRIPTION OR SIZE	QTY. REQ.

PARTS LIST

UNLESS OTHERWISE SPECIFIED			ORIGINATOR	D. MCGINNIS	8/1996
FRACTIONS	DECIMALS	ANGLES	DRAWN	G. GOLINSKI	8/1996
+/-	+/-	+/-	CHECKED		
			APPROVED		

1. BREAK ALL SHARP EDGES 1/64" MAX.
2. DO NOT SCALE DRAWING.
3. DIMENSIONING IN ACCORD WITH ANSI Y14.5 STD'S.

MAX. ALL MACHINED SURFACE

AutoCAD LT 2008

USED ON

MATERIAL

FERMI NATIONAL ACCELERATOR LABORATORY
UNITED STATES DEPARTMENT OF ENERGY

FERMI NATIONAL ACCELERATOR LAB TRACKING NARROW BAND FILTER

SCALE	FILMED	DRAWING NUMBER	REV.

REV.	DESCRIPTION	DRAWN	DATE
		APPD.	DATE

FRONT-END DAMPER MODULE

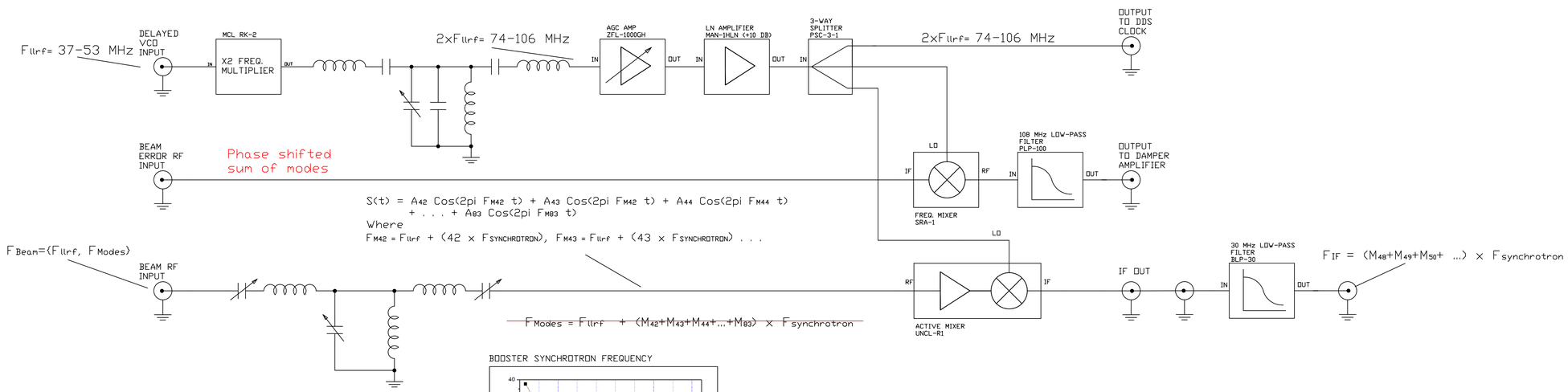

BOOSTER SYNCHROTRON FREQUENCY

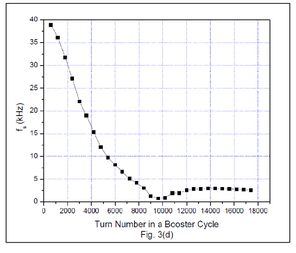

Fig. 3(d)

ITEM NO.	PART NO.	DESCRIPTION OR SIZE	QTY. REQ.

PARTS LIST

UNLESS OTHERWISE SPECIFIED			ORIGINATOR		
FRACTIONS	DECIMALS	ANGLES	DRAWN		
+/-	+/-	+/-	CHECKED		
1. BREAK ALL SHARP EDGES 1/64" MAX. 2. DO NOT SCALE DRAWING. 3. DIMENSIONING IN ACCORD WITH ANSI Y14.5 STD'S.			APPROVED		
			USED ON		
MAX. ALL MACHINED SURFACE			MATERIAL		

AutoCAD LT 2008

FERMI NATIONAL ACCELERATOR LABORATORY
UNITED STATES DEPARTMENT OF ENERGY

SCALE	FILMED	DRAWING NUMBER	REV.