REV.	DESCRIPTION	DRAWN	DATE
		APPD.	DATE

FRONT-END DAMPER MODULE

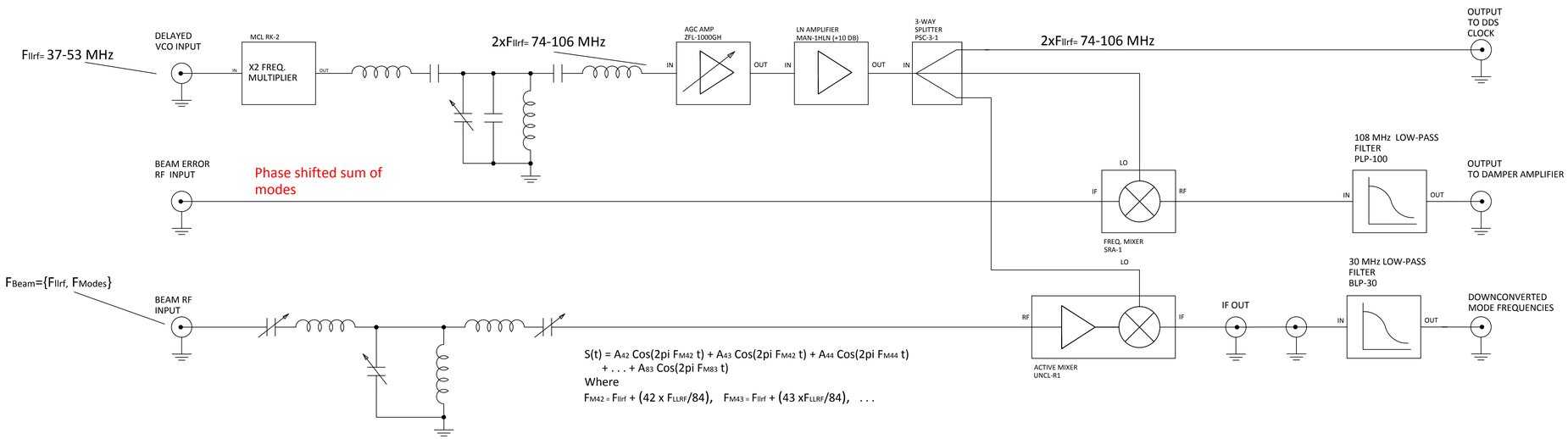

$S(t) = A_{42} \cos(2\pi F_{M42}\, t) + A_{43} \cos(2\pi F_{M42}\, t) + A_{44} \cos(2\pi F_{M44}\, t) + \ldots + A_{83} \cos(2\pi F_{M83}\, t)$

Where

$F_{M42} = F_{IIrf} + (42 \times F_{LLRF}/84)$, $F_{M43} = F_{IIrf} + (43 \times F_{LLRF}/84)$, . . .

Input Beam Frequencies of Interest

	Mode							
FIIrf	1	2	47	48	49	50	51	52
37	37.440	37.881	57.702	58.143	58.583	59.024	59.464	59.905
38	38.452	38.905	59.262	59.714	60.167	60.619	61.071	61.524
39	39.464	39.929	60.821	61.286	61.750	62.214	62.679	63.143
40	40.476	40.952	62.381	62.857	63.333	63.810	64.286	64.762
41	41.488	41.976	63.940	64.429	64.917	65.405	65.893	66.381
42	42.500	43.000	65.500	66.000	66.500	67.000	67.500	68.000
43	43.512	44.024	67.060	67.571	68.083	68.595	69.107	69.619
44	44.524	45.048	68.619	69.143	69.667	70.190	70.714	71.238
45	45.536	46.071	70.179	70.714	71.250	71.786	72.321	72.857
46	46.548	47.095	71.738	72.286	72.833	73.381	73.929	74.476
47	47.560	48.119	73.298	73.857	74.417	74.976	75.536	76.095
48	48.571	49.143	74.857	75.429	76.000	76.571	77.143	77.714
49	49.583	50.167	76.417	77.000	77.583	78.167	78.750	79.333
50	50.595	51.190	77.976	78.571	79.167	79.762	80.357	80.952
51	51.607	52.214	79.536	80.143	80.750	81.357	81.964	82.571
52	52.619	53.238	81.095	81.714	82.333	82.952	83.571	84.190
53	53.631	54.262	82.655	83.286	83.917	84.548	85.179	85.810

F mode = F IIrf + mode*(FIIrf/84)

Front End Damper Module Output

	Fclk =	F mixer out	Down Converted Mode								
FIIrf	2 x F IIrf	Fclk - F IIrf	1	2	47	48	49	50	51	52
37	74.000	37.000	36.560	36.119	16.298	15.857	15.417	14.976	14.536	14.095
38	76.000	38.000	37.548	37.095	16.738	16.286	15.833	15.381	14.929	14.476
39	78.000	39.000	38.536	38.071	17.179	16.714	16.250	15.786	15.321	14.857
40	80.000	40.000	39.524	39.048	17.619	17.143	16.667	16.190	15.714	15.238
41	82.000	41.000	40.512	40.024	18.060	17.571	17.083	16.595	16.107	15.619
42	84.000	42.000	41.500	41.000	18.500	18.000	17.500	17.000	16.500	16.000
43	86.000	43.000	42.488	41.976	18.940	18.429	17.917	17.405	16.893	16.381
44	88.000	44.000	43.476	42.952	19.381	18.857	18.333	17.810	17.286	16.762
45	90.000	45.000	44.464	43.929	19.821	19.286	18.750	18.214	17.679	17.143
46	92.000	46.000	45.452	44.905	20.262	19.714	19.167	18.619	18.071	17.524
47	94.000	47.000	46.440	45.881	20.702	20.143	19.583	19.024	18.464	17.905
48	96.000	48.000	47.429	46.857	21.143	20.571	20.000	19.429	18.857	18.286
49	98.000	49.000	48.417	47.833	21.583	21.000	20.417	19.833	19.250	18.667
50	100.000	50.000	49.405	48.810	22.024	21.429	20.833	20.238	19.643	19.048
51	102.000	51.000	50.393	49.786	22.464	21.857	21.250	20.643	20.036	19.429
52	104.000	52.000	51.381	50.762	22.905	22.286	21.667	21.048	20.429	19.810
53	106.000	53.000	52.369	51.738	23.345	22.714	22.083	21.452	20.821	20.190

Mode Frequencies Passed by the Output Filter

ITEM NO.	PART NO.	DESCRIPTION OR SIZE	QTY. REQ.

PARTS LIST

UNLESS OTHERWISE SPECIFIED			ORIGINATOR	W. PELLICO	8/2003
FRACTIONS	DECIMALS	ANGLES	DRAWN	C. DRENNAN	8/2013
+/-	+/-	+/-	CHECKED		
			APPROVED		

1. BREAK ALL SHARP EDGES 1/64" MAX.
2. DO NOT SCALE DRAWING.
3. DIMENSIONING IN ACCORD WITH ANSI Y14.5 STD'S.

MAX. ALL MACHINED SURFACE

AutoCAD LT 2008

USED ON

MATERIAL

FERMI NATIONAL ACCELERATOR LABORATORY
UNITED STATES DEPARTMENT OF ENERGY

FERMI NATIONAL ACCELERATOR LAB
BOOSTER FRONT-END DAMPER MODULE

SCALE	FILMED	DRAWING NUMBER	REV.
		0323.00 - EC - 282390	