FERMILAB
ENGINEERING NOTE

SECTION	PROJECT	SERIAL-CATEGORY	PAGE

SUBJECT: Booster Longitudinal Dampers

NAME:

DATE:

REVISION DATE:

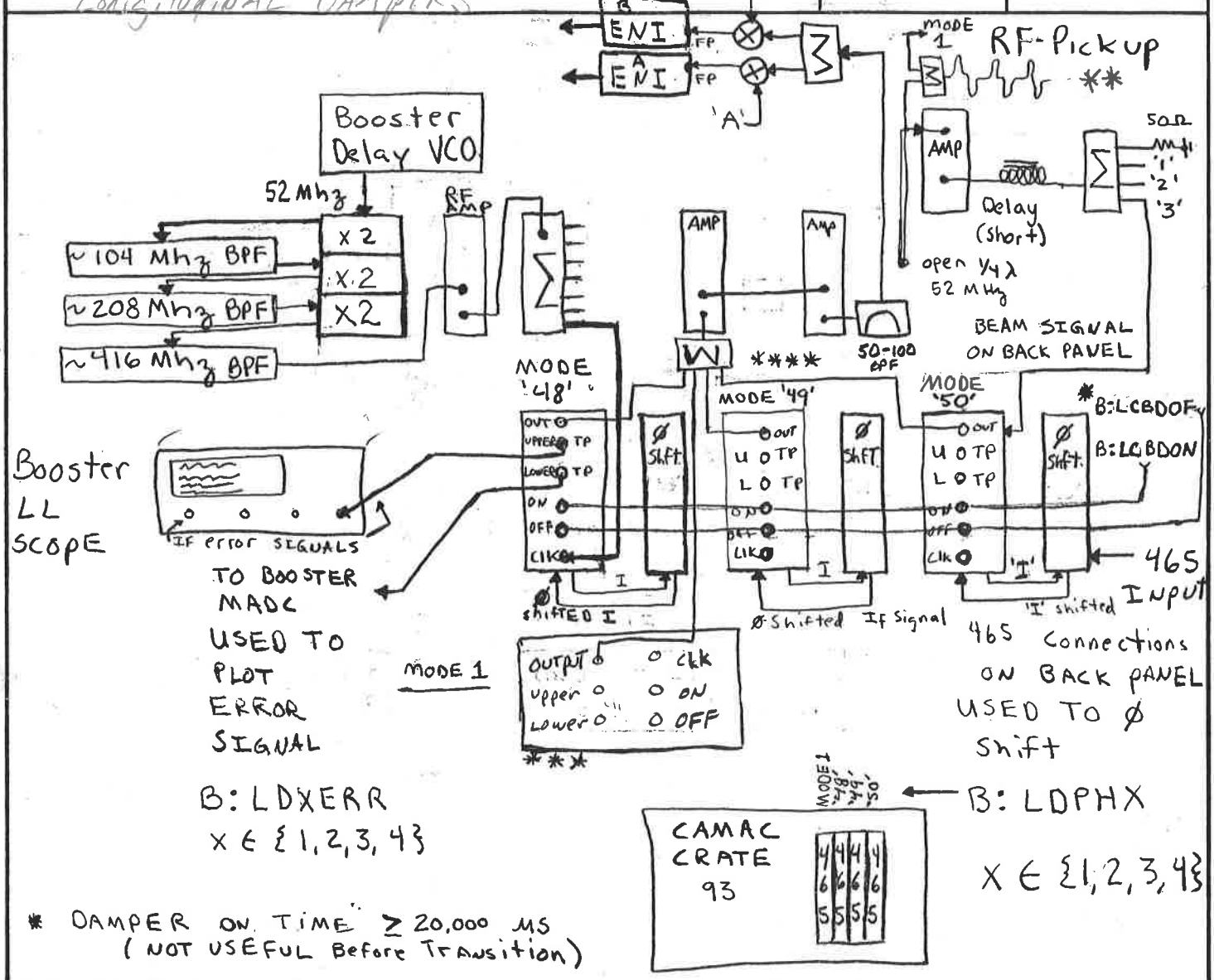

* DAMPER ON TIME ≥ 20,000 MS (NOT USEFUL Before Transition)

** RF Pickup (mode 1 RF split occurs before 1ST AMP)

*** MODE 1 MODULE has a slightly different layout. It uses the same RF pickup but requires a 52 Mhz choke (open) and so does not appear on the 4-way Pickup split.

**** Attenuation for Various dampers NOT SHOWN.
- Attenuation Varies with Booster Intensity.

***** NOTE. This is not actually a pure Phase shifting Process.

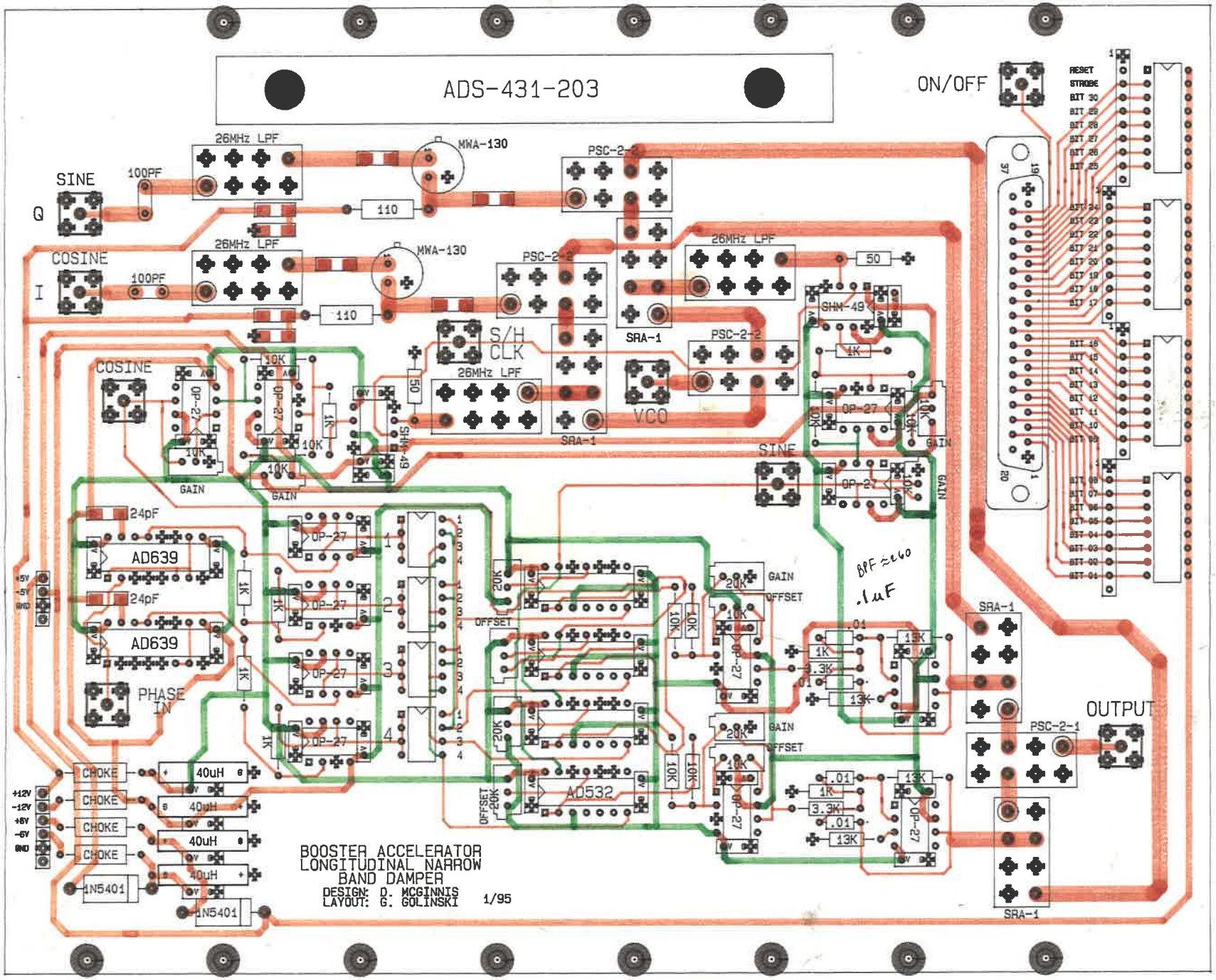
ADS-431-203
ON/OFF
SINE
Q
COSINE
I
100PF
26MHz LPF
MWA-130
110
PSC-2-2
SRA-1
50
SHM-49
S/H
CLK
VCO
10K
1K
OP-27
GAIN
24pF
AD639
PHASE
IN
OFFSET
20K
13K
3.3K
.01
AD532
CHOKE
40uH
1N5401
+12V
-12V
+5V
-5V
GND
OUTPUT
PSC-2-1
RESET
STROBE
BIT 30
BIT 29
BIT 28
BIT 27
BIT 26
BIT 25
BIT 24
BIT 23
BIT 22
BIT 21
BIT 20
BIT 19
BIT 18
BIT 17
BIT 16
BIT 15
BIT 14
BIT 13
BIT 12
BIT 11
BIT 10
BIT 09
BIT 08
BIT 07
BIT 06
BIT 05
BIT 04
BIT 03
BIT 02
BIT 01
BPF ≈ 260
.1uF
BOOSTER ACCELERATOR
LONGITUDINAL NARROW
BAND DAMPER
DESIGN: D. MCGINNIS
LAYOUT: G. GOLINSKI 1/95

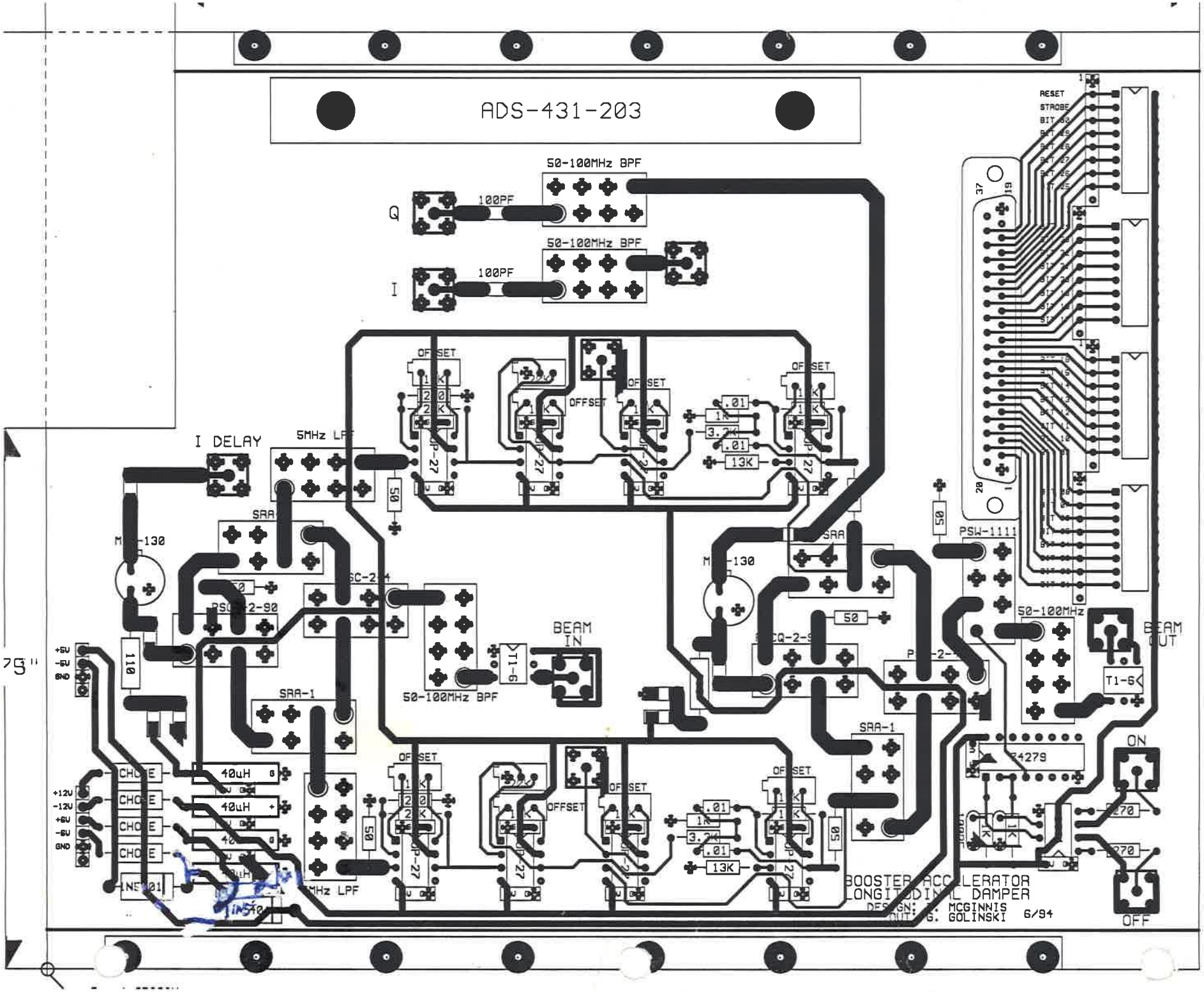
ADS-431-203
50-100MHz BPF
Q
100PF
I
I DELAY
5MHz LPF
OFFSET
SRA
SRA-1
BEAM IN
BEAM OUT
50-100MHz BPF
50-100MHz
PSW-1111
T1-6
40uH
CHOKE
+5V
-5V
GND
+12V
-12V
+6V
-6V
RESET
STROBE
ON
OFF
BOOSTER ACCELERATOR
LONGITUDINAL DAMPER
DESIGN: J. MCGINNIS
OUT: G. GOLINSKI
6/94