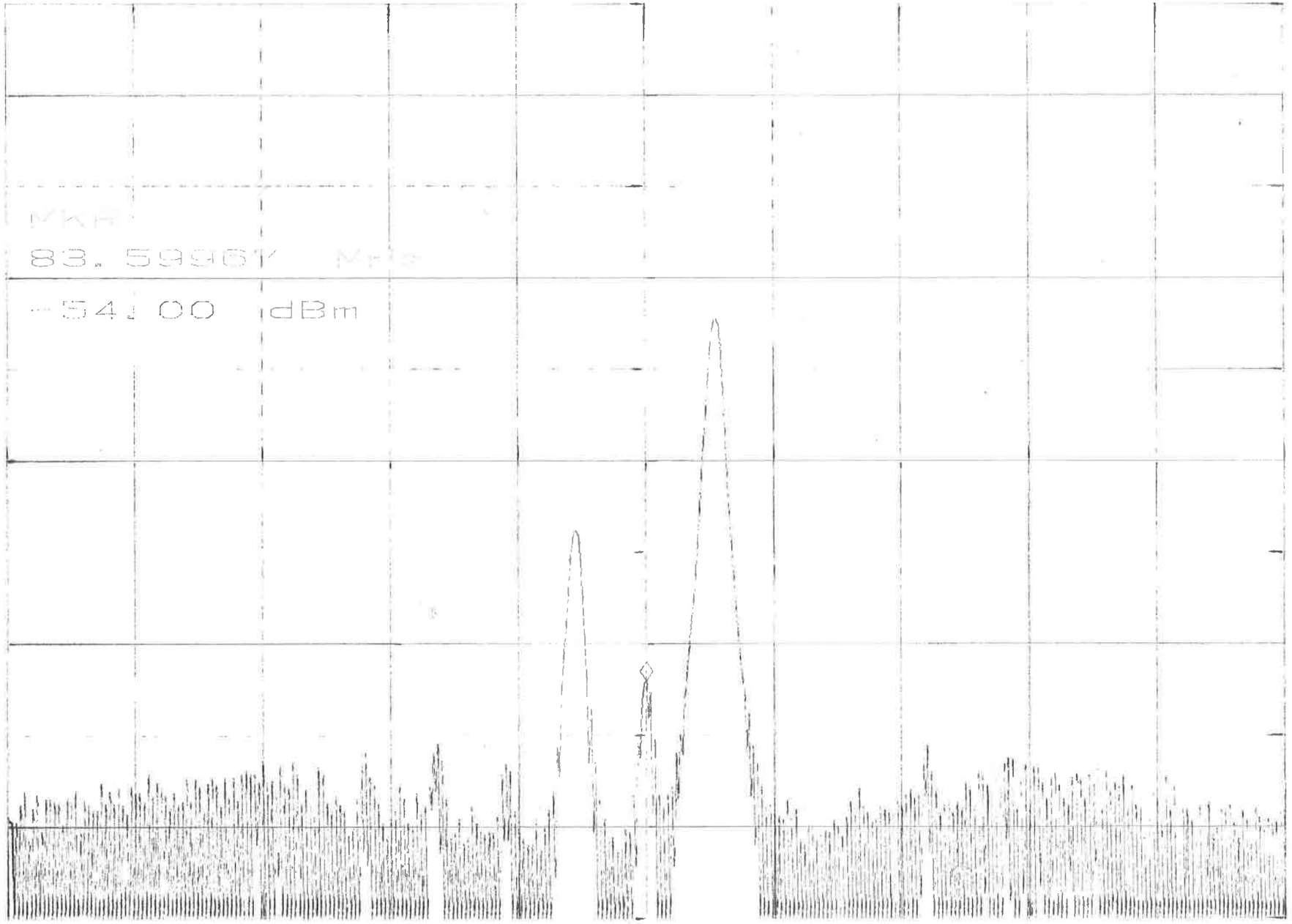

Mode 49
5Khz @ -35 dBm
CLK @ 422.4MHz

SPAN 50 Khz.

10 dB/

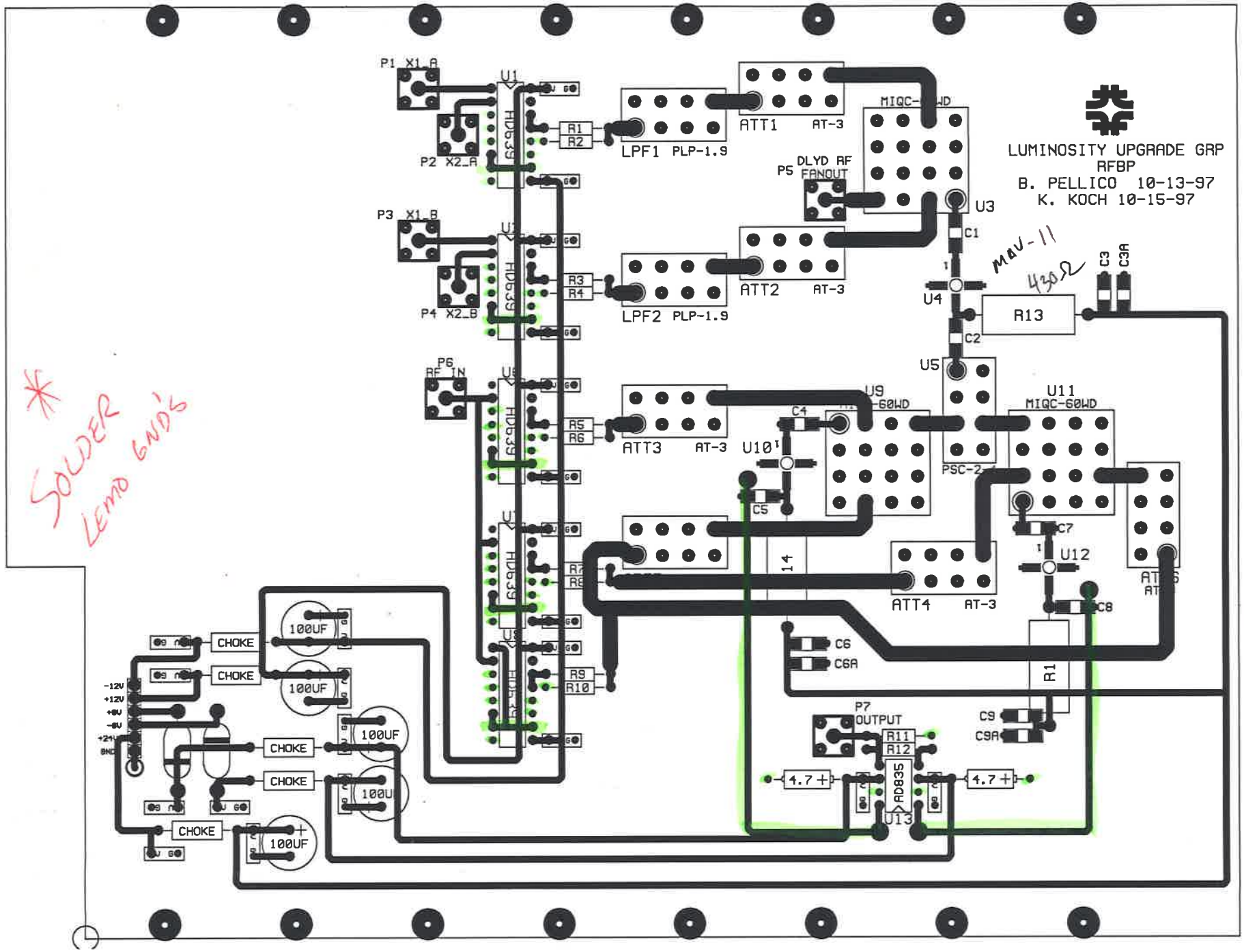
LUMINOSITY UPGRADE GRP
RFBP
B. PELLICO 10-13-97
K. KOCH 10-15-97
P1 X1_A
P2 X2_A
P3 X1_B
P4 X2_B
P6 RF IN
P5 DLYD RF FANOUT
P7 OUTPUT
U1
U3
U4
U5
U9
U10
U11
U12
U13
R1
R2
R3
R4
R5
R6
R7
R8
R9
R10
R11
R12
R13
LPF1 PLP-1.9
LPF2 PLP-1.9
ATT1 AT-3
ATT2 AT-3
ATT3 AT-3
ATT4 AT-3
MIQC-60WD
PSC-2
AD835
C1
C2
C3
C3A
C4
C5
C6
C6A
C7
C8
C9
C9A
CHOKE
100UF
-12V
+12V
+6V
-6V
+24V
GND
MAV-11
430Ω
* SOLDER LEMO GND'S

50Ω

12
− 5
7

$\frac{7v}{R} = 120 \times 10^{-3}$

$\frac{7v}{1kΩ} = 120mA$

1x10

−4.8 ~ −5 dBm

−2.17

−1.83

MWA 130 ~ +10dB at 79 MHz

7.67

+12
+10 dBm

100 V ?

mode error
should be less than −24 dBm
otherwise OP27 Amp Saturates

Block Diagram of Longitudinal Damper

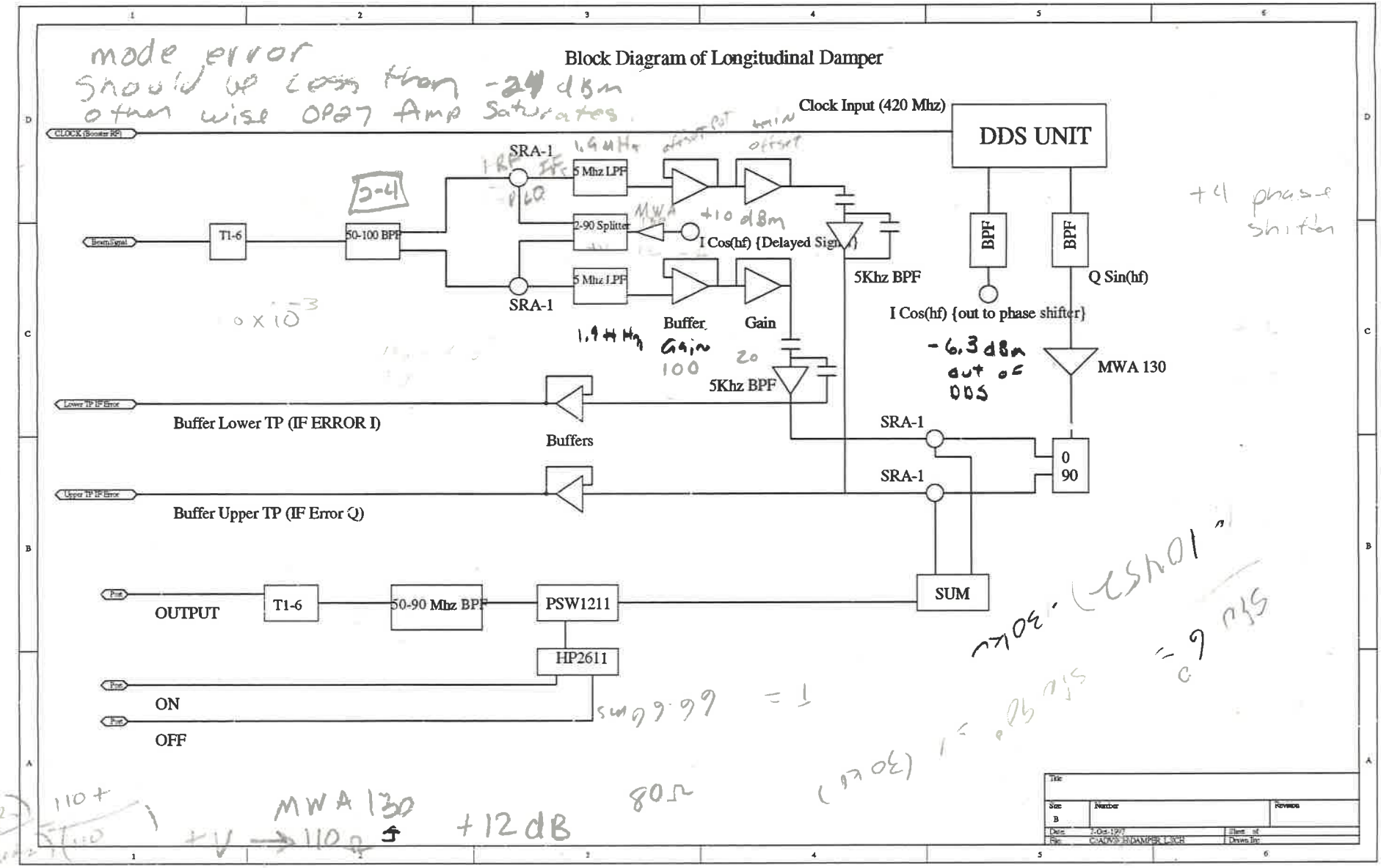

+4 phase shifter

−6.3 dBm out of DDS

MWA 130 +12 dB

80Ω

+V → 110Ω

110+

−9
+16
5
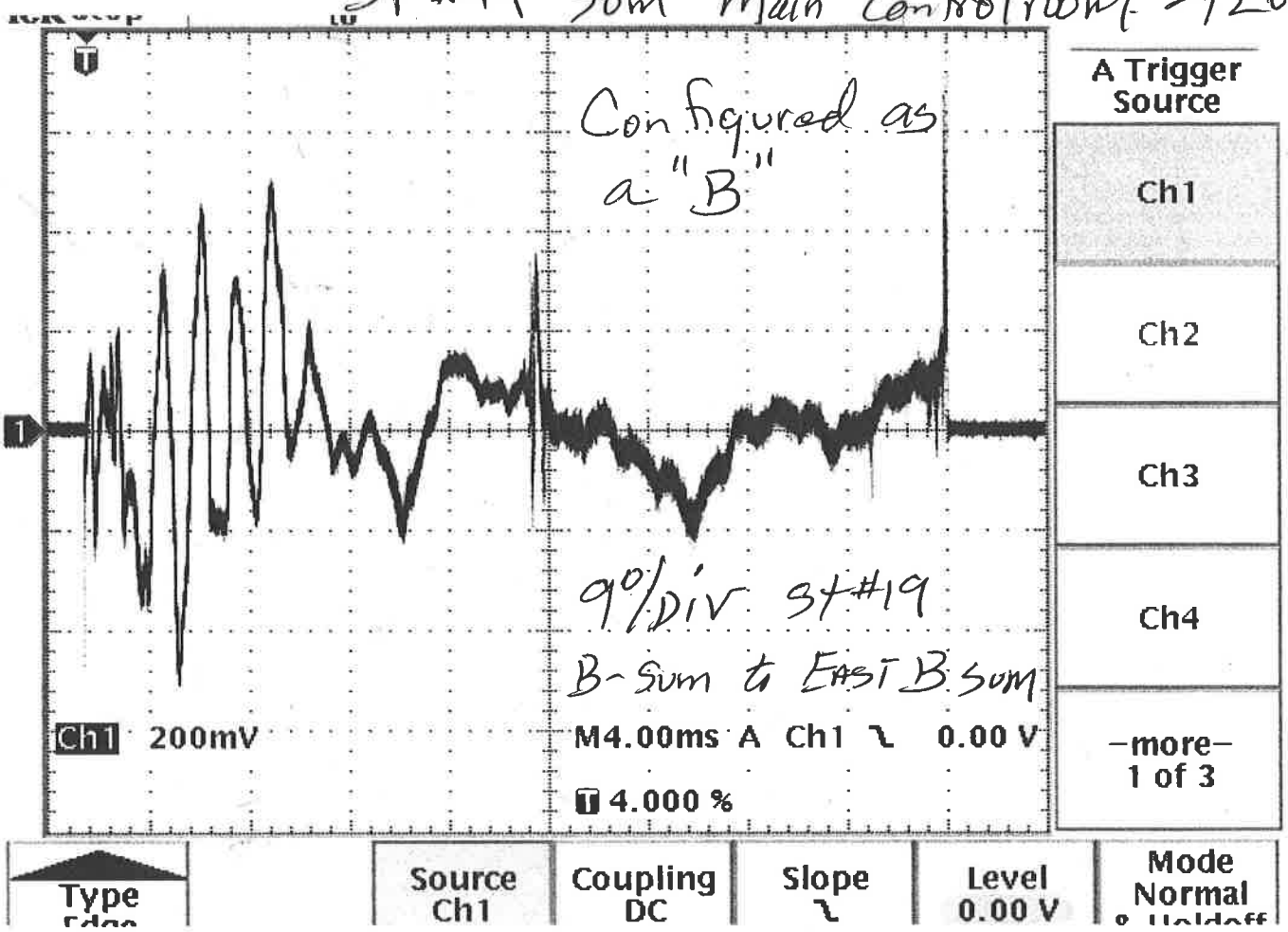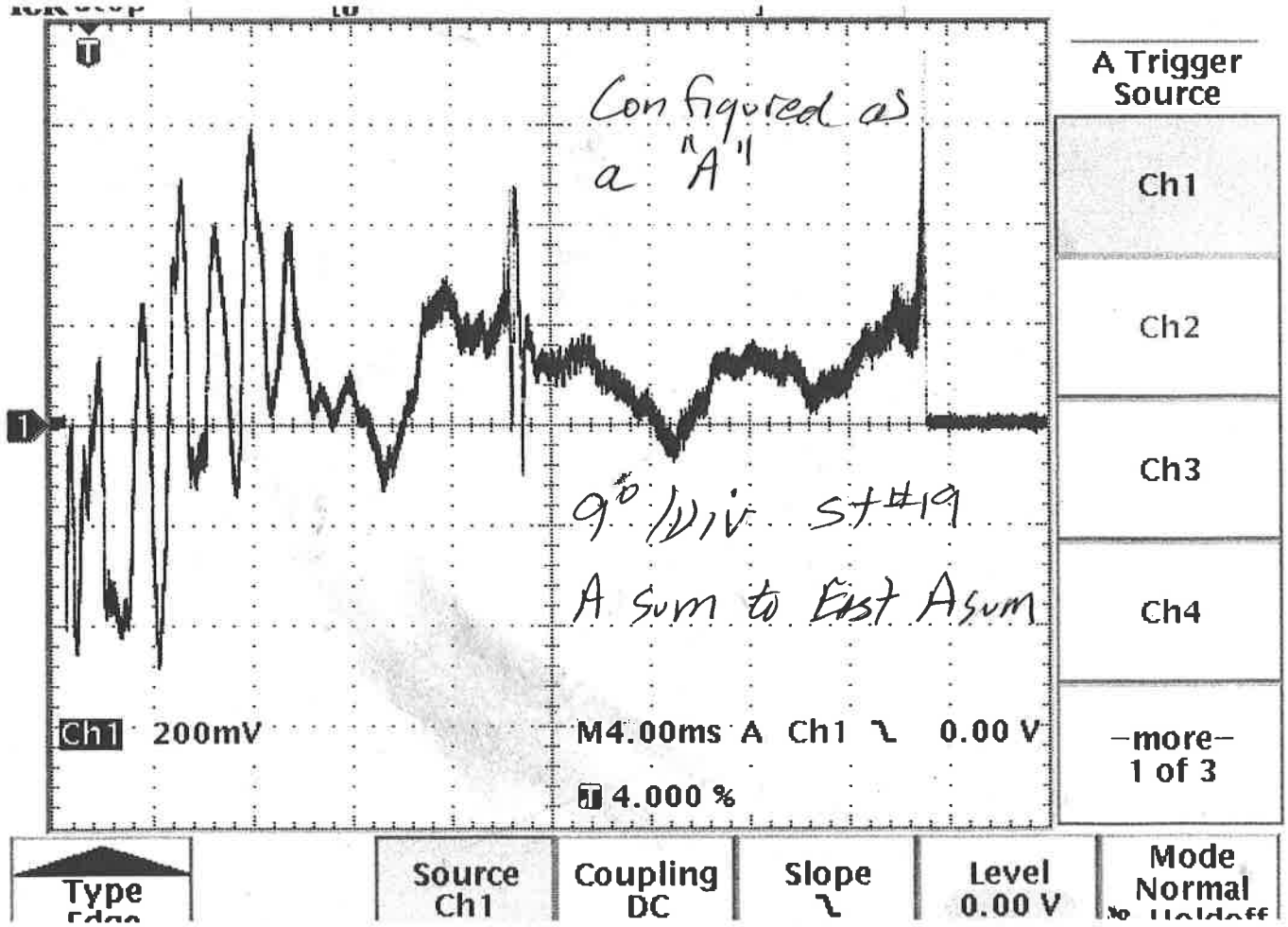
St #19 Sum Main Control room 2/20/08