Booster (PIP) PIP II
How to make 50+ year old Booster make the jump

Fermilab APT Seminar
November 11, 2014
W. Pellico

Outline

- Present Booster operations
  - Booster numbers today
  - PIP numbers and goals
- PIP II Booster
  - PIP II Booster parameters
  - Systems impacted by PIP II plan
    - Injection/Capture
    - RF
    - 20 Hz operations
    - Beam dynamics/loss control
    - Misc. – Long term viability and reliability
  - What is the plan
  - Cost and schedule ideas

Proton Delivery Scenario

(approximate, no shutdowns shown)

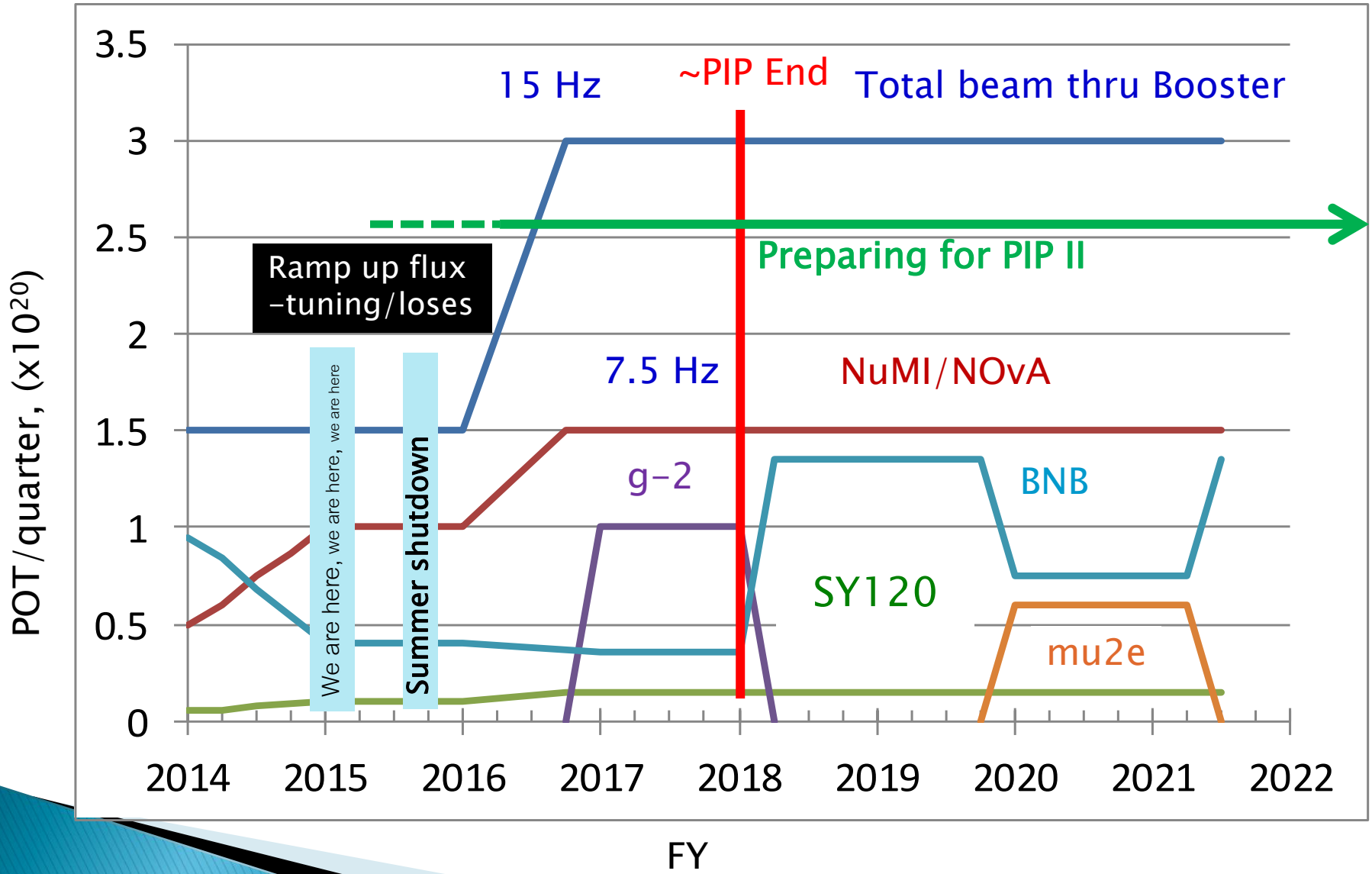

PIP Planning
near term vs. longer term

- Get to 15 Hz
- Increase flux
  - Loss control
  - Shielding
  - Beam physics

- Reliability
- Viability
- **PIP II interface**
  - **PIP modified to better align to PIP II**

PIP was planned to be a ~5 year campaign: Why?

- Due to fact that after NOvA and BNB (as well as Muon/G-2) would require more flux than the PS could deliver in planned timetable – required a rapid response
- Additionally, the PS would need to keep running reliably for 15+ years required a long term strategy

Scope change to PIP

Modifications to PIP objectives that reflect present laboratory planning. This letter from Sergei will be added to PIP docs and reflected in PIP planning.

Extend Booster operations to 2030
Linac Operations till 2023
Consider transition to PIP II

Fermilab

Sergei Nagaitsev
Accelerator Division
MS 306

630.840.4397
nsergei@fnal.gov

September 30, 2014

Bill Pellico
Project Manager
Proton Improvement Plan
pellico@fnal.gov

Dear Bill,

I would like to update the objectives and goals for the Proton Improvement Plan (PIP) in light of progress to this point and the lab's strategy. Even though PIP is well underway, some adjustments to the project are needed to align with the upcoming PIP-II project. This letter supplants the initial guidance delivered by Stuart Henderson on Dec. 7, 2010, at the Proton Source Workshop and documented in Beams-doc-3739.

The overarching goal of PIP should now be to develop and implement a plan to meet the targets for Proton Source throughput, while maintaining good availability and acceptable residual activation. Specifically, when executed, PIP should enable Linac/Booster operation capable of delivering 2.3E17 protons per hour at 15 Hz while maintaining Proton Source availability at 85 % and maintaining residual activation at acceptable levels.

These plans should anticipate a useful operating life of the Linac through 2023, and the Booster through 2030. In addition, the plan should anticipate a transition to the new PIP-II linac in 2023, with which the Booster will be expected to deliver 4.7E17 protons per hour at 20 Hz. The remaining deliverables within PIP should be mindful of the PIP-II and possible subsequent upgrades.

Sincerely,

SNag 11291

Sergei Nagaitsev
Chief Accelerator Officer
Fermi National Accelerator Laboratory

CC: Nigel Lockyer, Joe Lykken, Tim Meyer, Hasan Padamsee, Greg Bock, Steve Geer, Gina Rameika, Mike Lindren, Rob Roser, Vladimir Shiltsev, Paul Czarapata, Bob Zwaska, Steve Holmes

Present Booster (PIP underway)

Average numbers for 1 year

Parameter	Sept. 2005	Now
Ave. Extraction Intensity	3.8E12	4.5E12
Ave. Beam Power Lost	510 W	440 W
Notch Bunches	4	3
Efficiency	84.5	90.4
MI Batches	7	11
Booster Rep Rate	5 Hz	7.5 Hz
Booster Flux (E17/hour)	6.5	1.1
NOvA Flux (E16/hour)	3	7
BNB Flux (E16/hour)	2	3
NOvA Beam	184 W	~280 W

Rate Limited

Loss Limited

Operational Limit
Set for reliability

Off right now

As high as ~340W
Will try for 400W

When PIP Completed – Major Booster Upgrades

- Updated Utilities (vacuum, LCW and power)
- Additional RF Cavities and Voltage (3 additional)
- Refurbished Cavities for 15 Hz operations
- New Anodes, Modulators and updated Bias supplies
- RF solid state drives
- New notch absorber/kicker systems
- New digital BPM and damper systems
- Updated beam optics software and control
- Updated low level hardware
- New cogging system
- Total Loss Monitor (TLM) system operational
- Harmonic cavity(s) – injection/transition

Once PIP Completed

- Only remaining original hardware in Booster will be the gradient magnet system and some small fraction of utilities
  - All other systems will either be relatively new (<10 years) or significantly upgraded
- Linac upgrades will allow reliable delivery (>85 % uptime) of beam till 2023
  - Plans for longer lifetime operations, 2025 and beyond, will not be pursued such as the replacement of high power 7835 triode

PIP Booster Parameter Table

Parameter	PIP Done
Ave. Extraction Intensity	4.3E12/pulse
Ave. Beam Power	< 510 Watts
Local loss points limits remain	
Bunches removed (either in Linac or Booster)	3
Efficiency	95%
Booster Rep Rate	**15 hz**
MI Batches	12 every 1.33sec
Rate Availability for other users	6 Hz
Booster Flux Capability	**~2.3E17p/hr**
Longitudinal Energy Spread	< 6 Mev
Transverse emittances (4.3E12)	<14 π-mm-mrad
Booster Uptime	>85%

PIP Done – Now Another Push

PIP II Booster

Performance Parameter	Requirement	Units
Input (H^-) Beam Energy (Kinetic)	**800**	MeV
Output Beam Energy (Kinetic)	8.0	GeV
Protons per Pulse (injected)	7.0×10^{12}	
Protons per Pulse (extracted)	**6.4×10^{12}**	
Beam Pulse Repetition Rate	**20**	Hz
RF Frequency (injection)	44.7	MHz
RF Frequency (extraction)	52.8	MHz
Injection Time	0.6	msec
Injection Turns	315	
Beam Emittance (6σ, normalized; $\varepsilon_x = \varepsilon_y$)	<18	π mm-mrad
Laslett Tune Shift at Injection (Gaussian)	-0.2634	
Delivered Longitudinal Emittance (97%)	0.08	eV-sec
Delivered Momentum Spread (97% full height)	12.2	MeV
Delivered Bunch Length (97% full length)	8.2	nsec

50% higher flux than the planned PIP operations **which is expected to double present flux level.** (4.3e12 protons @15Hz at the end of PIP)

30% decrease in space charge tune shift @ 800 MeV.

Requirement For Booster Operations

- 4.3E12 ppp with 81 bunches to Recycler
- 9 Hz to FULL 15 Hz operation for entire Fermilab exp. program
- Delivering 2.3E17 protons/hour (at 15 Hz) in 2016

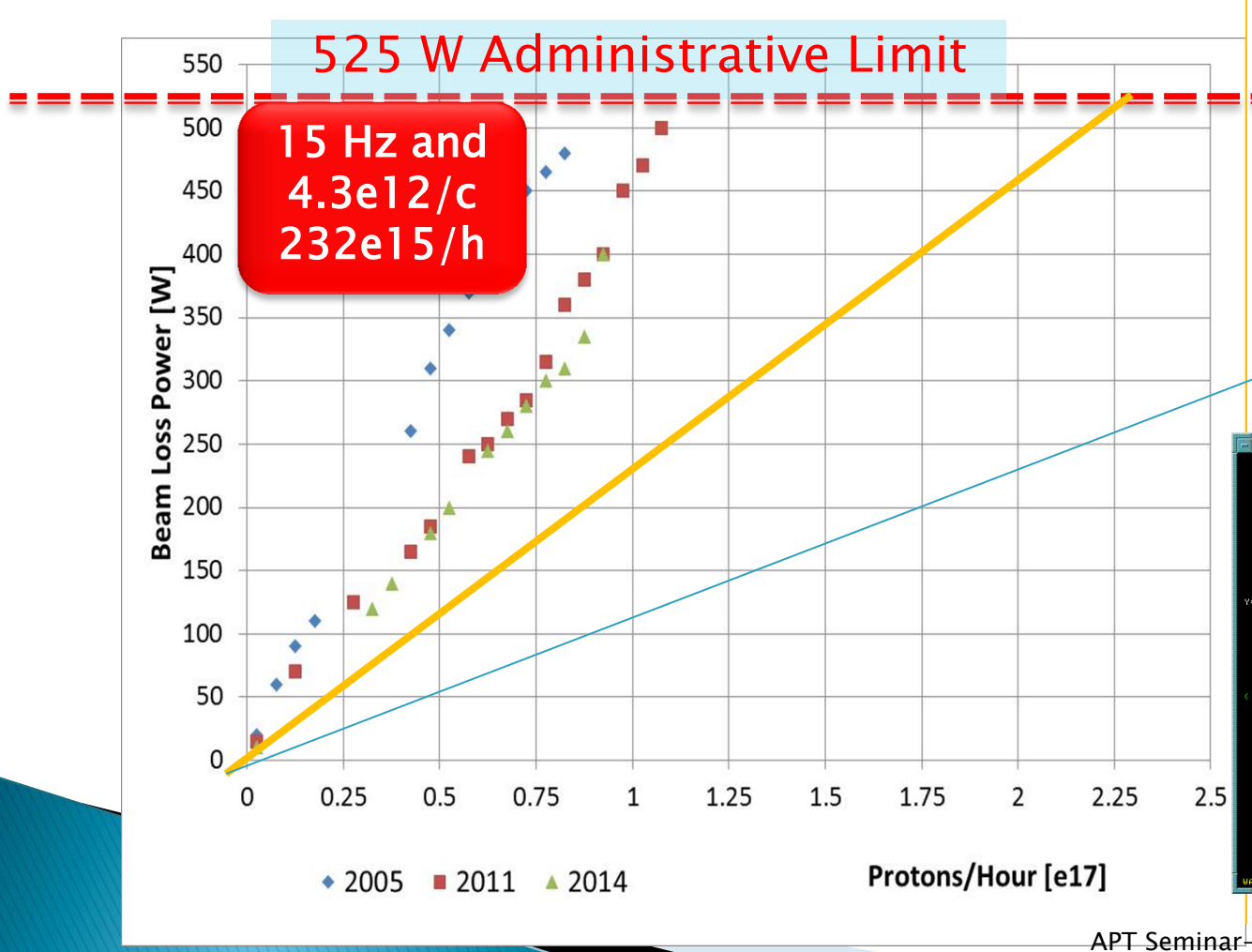

20 Hz and
6.4e12/c is
460e15/h !

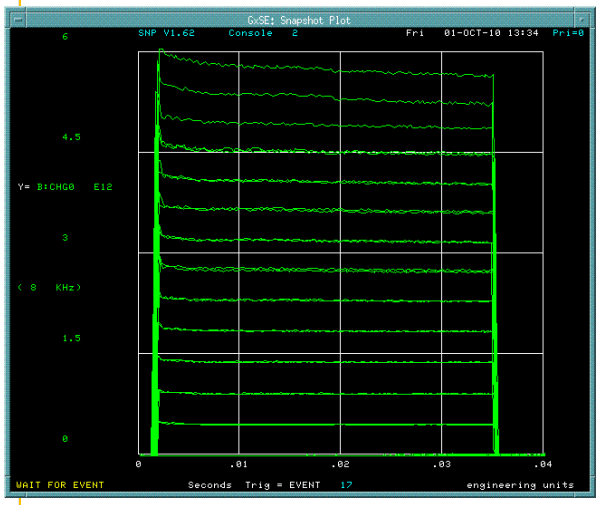

Overview Of Required R&D

- New injection point at L11
  - New injection girder
  - Space charge mitigation: painting
  - New stripping foil system
  - H^0 , H^- absorber
- RF Cavity investigation/design/construction
- RF capture
  - capture scheme: paraphasing or direct injection into buckets
  - 2nd harmonic cavities (considered but probably unnecessary)
- Transition crossing
  - RF focusing method
  - RF focus free method (flattening of RF amplitude)
    - 2nd or 3rd harmonic cavities. (can also be used in RF focusing method)
  - γ_t jump system (not likely)
    - requires resurrection/rebuild of old system

Overview Of Required R&D (cont'd)

- Damper upgrades and collimation system
  - longitudinal quadrupole damping when going through transition
  - longitudinal coupled bunch mode damping at high field
  - transverse dampers for coupled bunch modes
- Evaluation of present collimation system w.r.t. expected PIP II
- Beam quality at extraction
  - emittances determined by Recycler admittances
- 20 Hz operations and components
  - GMPS
  - pulsed systems
  - controls

New Injection Point Into Booster

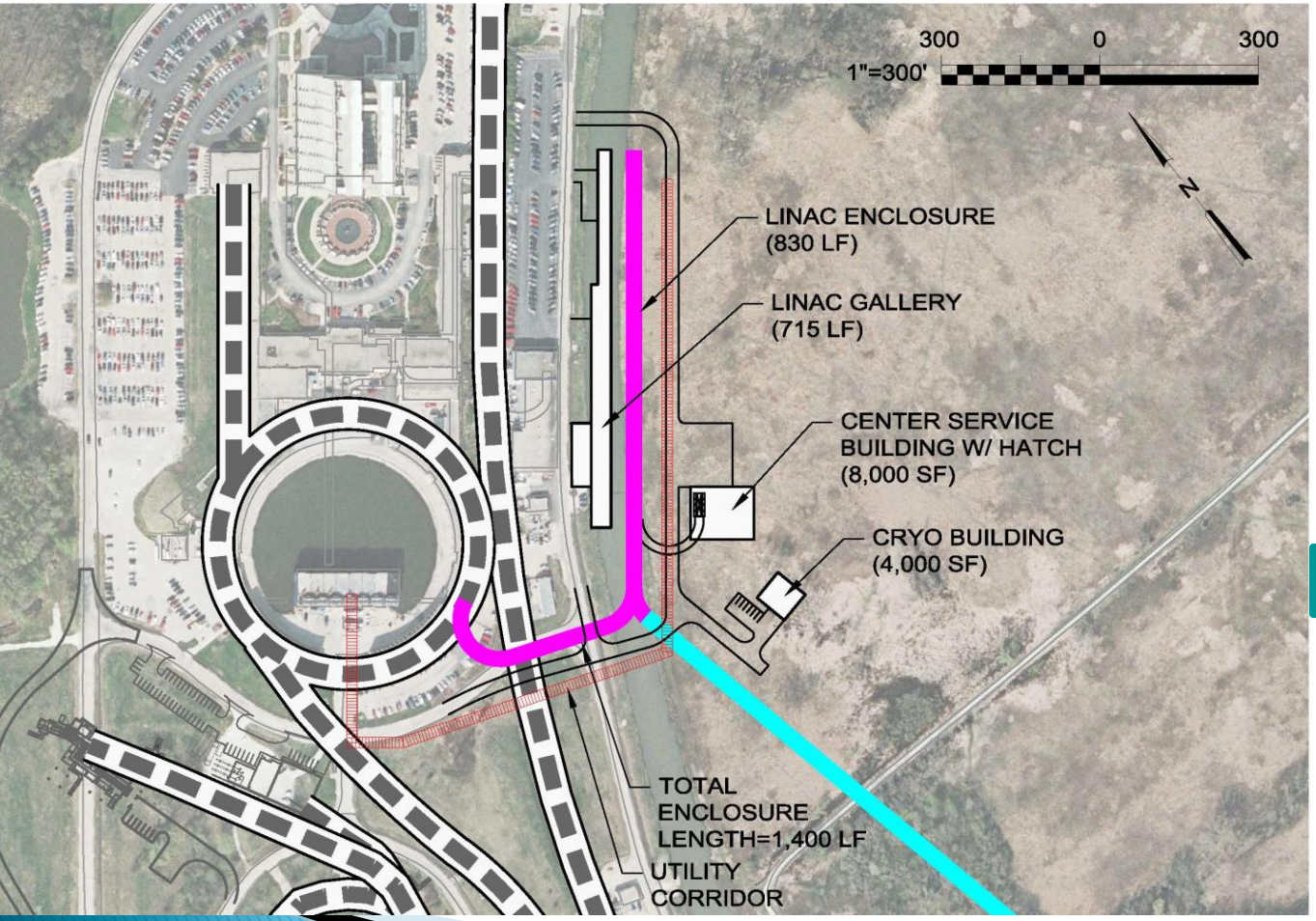

New injection point at L11
Old injection point at L1

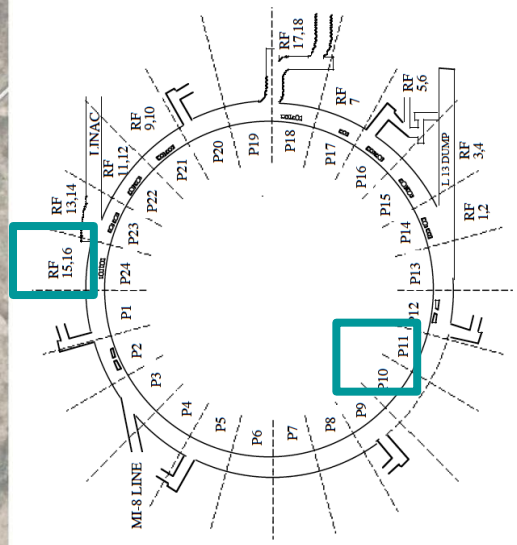

New Injection Girder

- Beam can enter either horizontally or vertically
- A new 3 bump system that can take 800 MeV beam (2x stronger)
- Beam painting to mitigate space charge effects because of longer injection time (0.6 ms)
- Carbon foil for stripping (15 turns vs 315 turns)
  - Lifetime effects
- New beam absorber for H^0 and H^-
  - Build inside a gradient magnet
  - Design new stronger and shorter gradient magnets to make space for an absorber (preferred)

Vertical Injection Concept

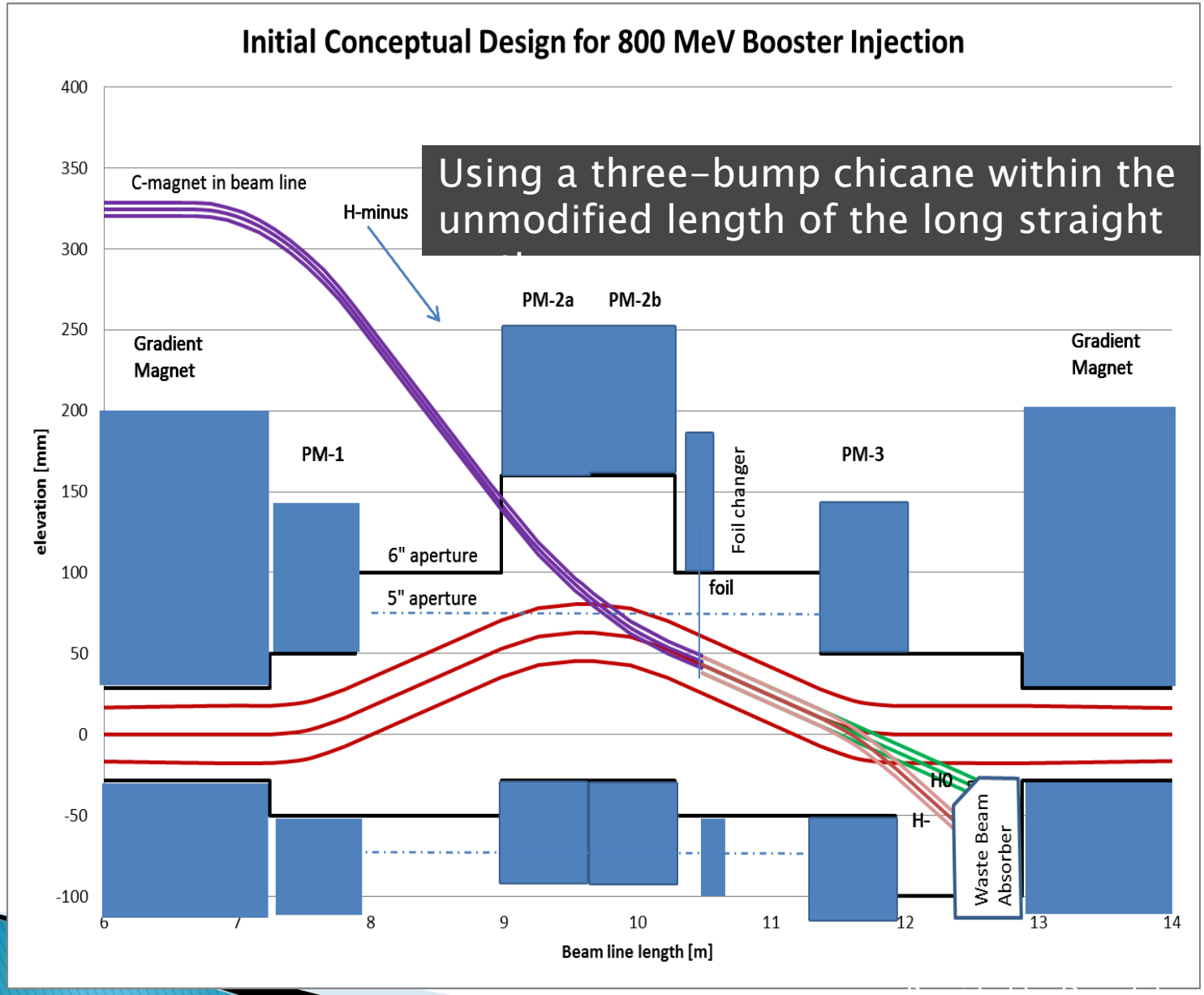

Injection Girder – Foil

Provided by Dave Johnson

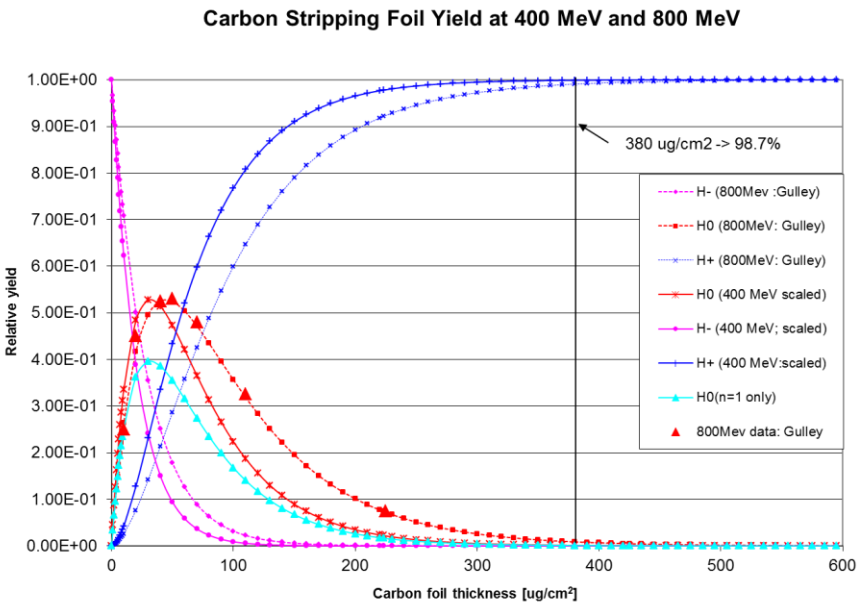

For a std. foil thickness 380 μg/cm^2 (1.15 μm)

400 MeV –> 99.9% efficiency to protons
800 MeV –> 99.1% efficiency to protons

To match 400 MeV efficiency at 800 MeV foil thickness needs to increase to ~545 μg/cm^2

At 800 MeV with 7E12 injected at 20 Hz
Injection power increases to ~ 17 kW
For a 0.1% loss –> ~17 W on downstream gradient magnet
–> **<u>Need to provide injection absorber</u>**
The space is very tight making an effective design difficult!

current foil holder

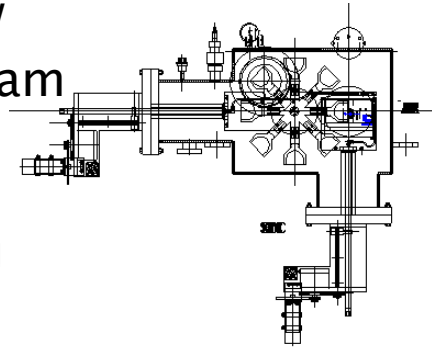

current foil

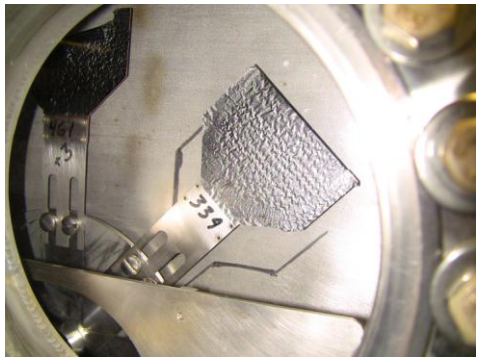

Stripping Foil

Provided by Leonid Vorobiev

Example of foil heating simulations

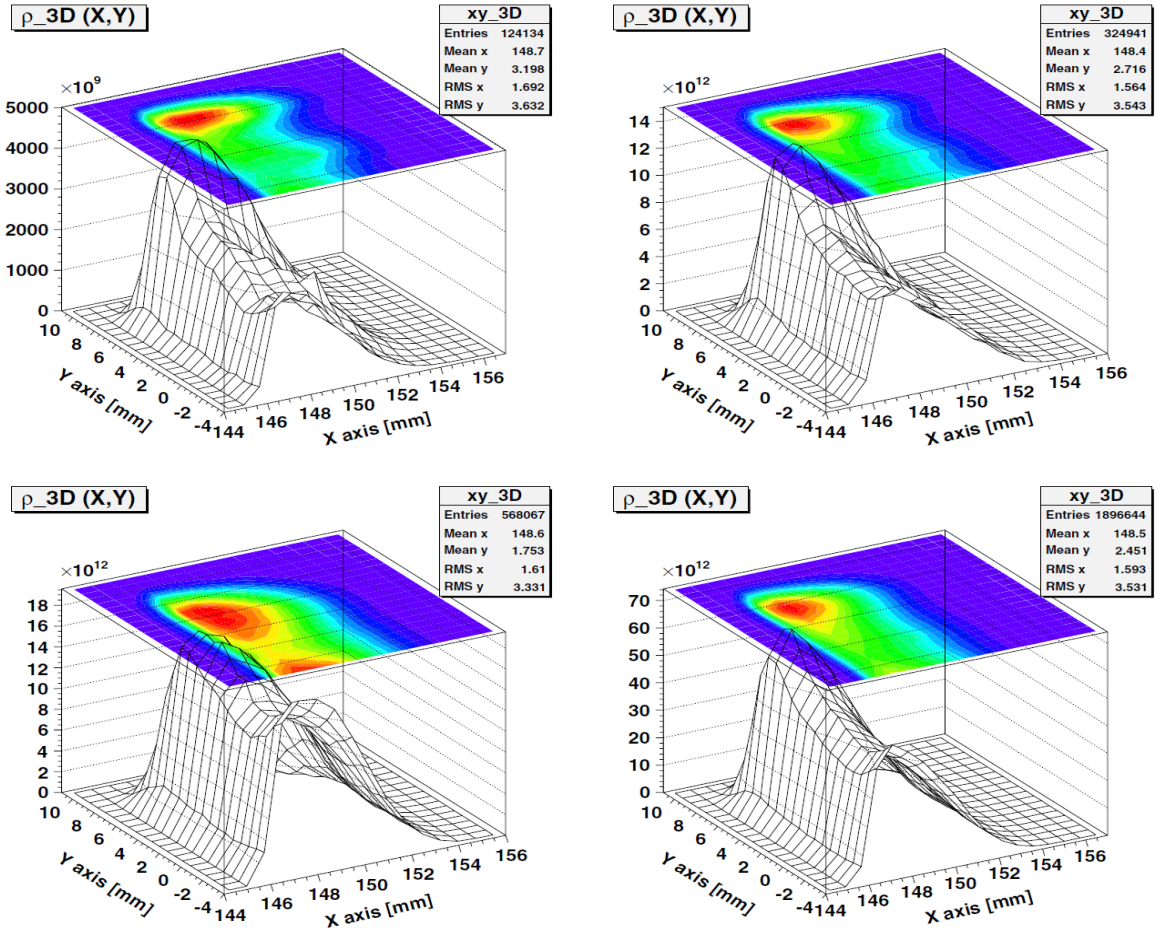

Particle hit number on the foil during 1st, 4th, and 6th cycles are: 62067, 162470, and 284034, respectively

Total hit number: 948322

Average number of interactions with foil: 33 for each injected particle

Hit density at the maximum of the distribution: 1.31E14 proton/mm^2 at 2.52E11 particles injected at every turn

Injection Painting For Space Charge Mitigation

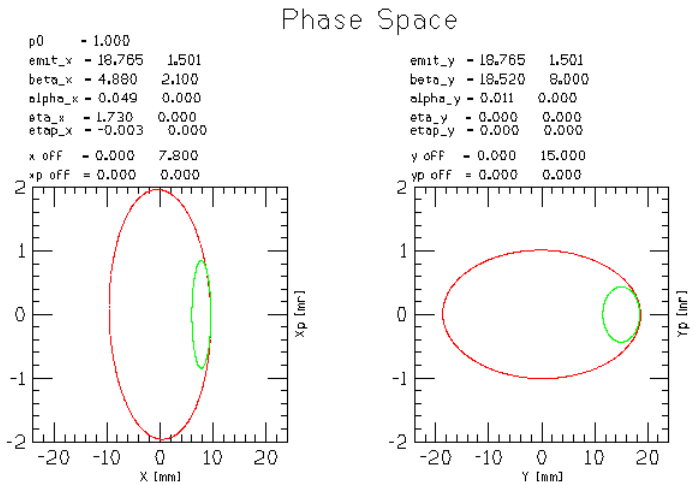

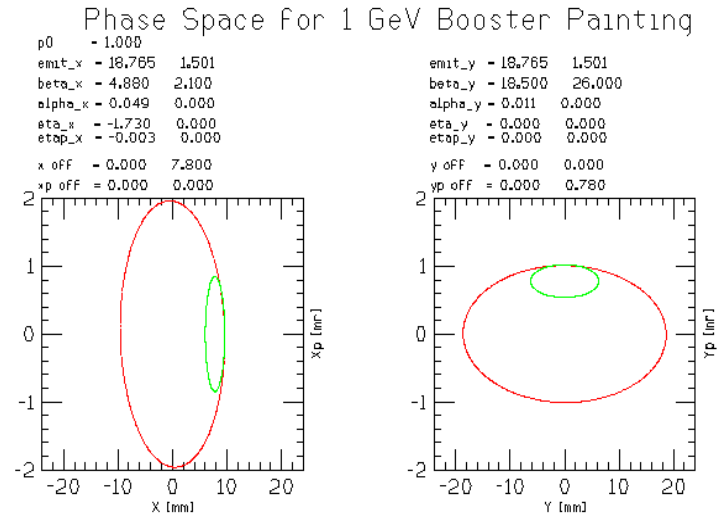

Green: injected beam
Red: phase space after painting

Beam line matching conditions for two painting scenarios. Left paint in both planes in the ring (SNS) and right paint horizontal in ring and steer (angle mismatch) from beam line (JPARC)

Capture (adiabatic at 800 MeV)

At injection

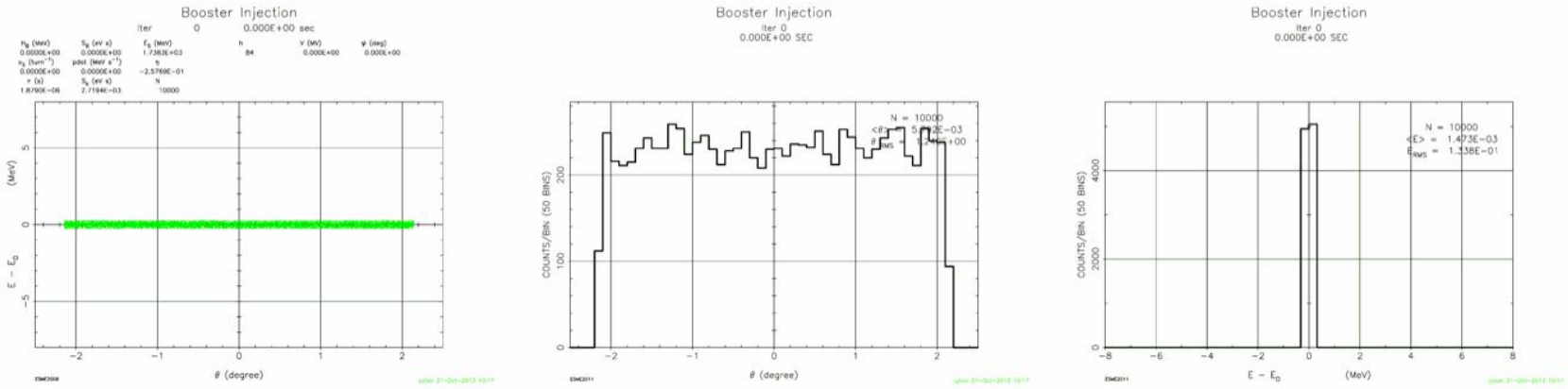

After adiabatic capture

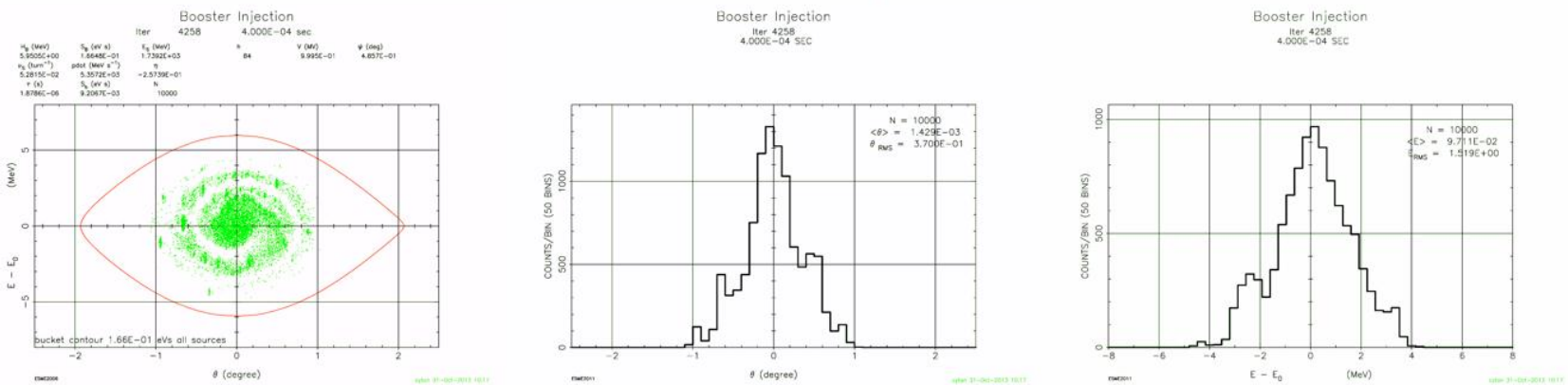

0.6 ms injection time
0.4 ms adiabatic ramp to full voltage (1 MV)

Capture (bucket to bucket injection)

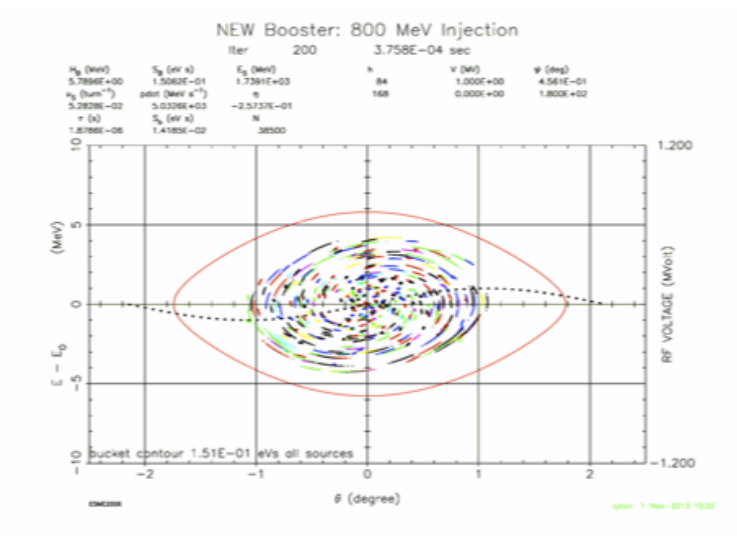

Chopping 180 deg

ESME 1D

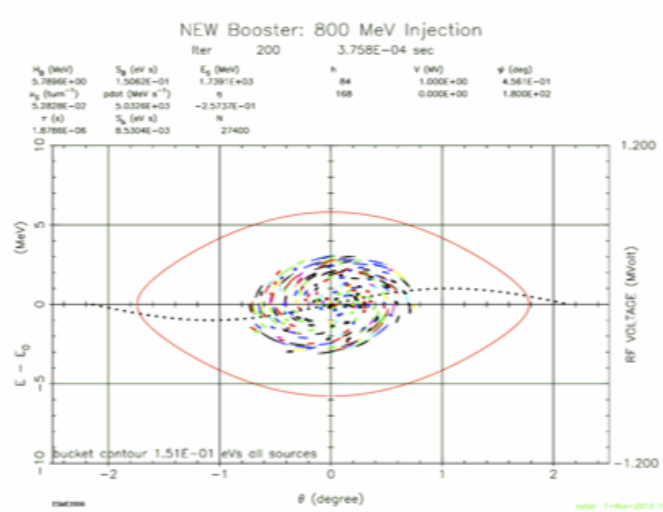

Chopping 120 deg

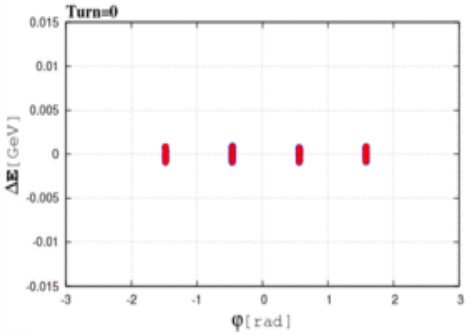

ORBIT3D

Provided by Leonid Vorobiev

0.6 ms injection time
Chopping is required to get the correct bunch pattern into the bucket
Linac 2mA beam current for 0.6 ms provides 7.5E12 particles
May need flattened front porch for injection
Using Linac energy control vs. Booster ramp control needs to be studied

Transition Crossing

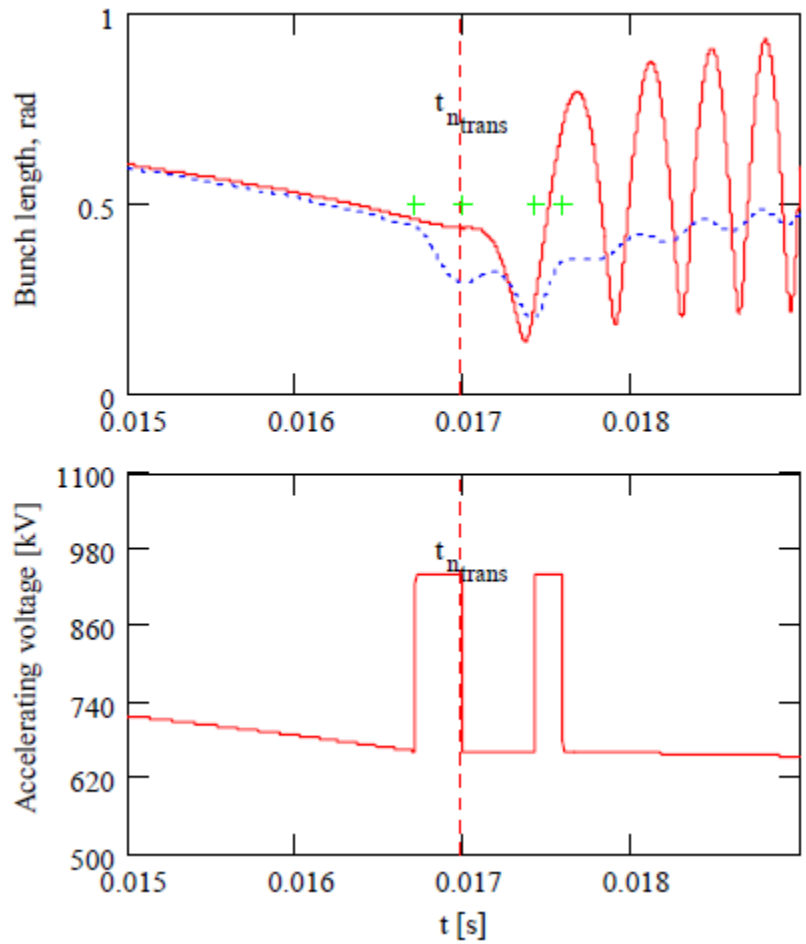

Transition crossing at 4.2 GeV

More RF for focusing during transition
~25% more RF implies 3 – 4 more RF cavities using present design (22 – 23 cavities)

Example shown here is the compensation of the effect of space charge that is defocusing before transition & focusing after transition

- Increase RF voltage before transition
- Increase RF voltage again to damp out quadrupole oscillation.
- Using quadrupole damper effectively also requires RF overhead

RF Cavity

- PIP is refurbishing cavities…
  - They will not be new cavities when completed
    - Concern with long term reliability
    - Repairing only obvious problems that prevent 15 Hz operations

Fixing broken or soon to break components – takes 10 weeks per cavity but they are not 'new' cavities

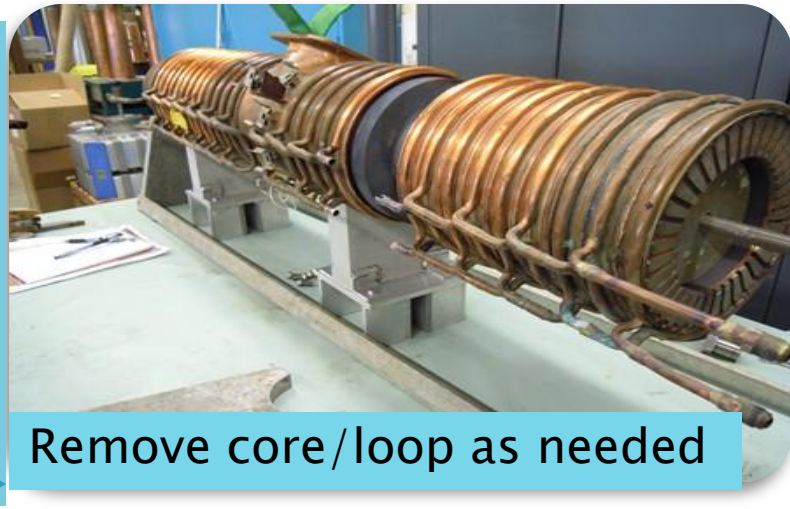

Remove core/loop as needed

So under PIP, work on understanding our present RF cavity design and optimization and also a parallel biased cavity design.

PIP II transition effort needs to define new cavity requirements and implement plan

Tunable Cavities (two options being studied)

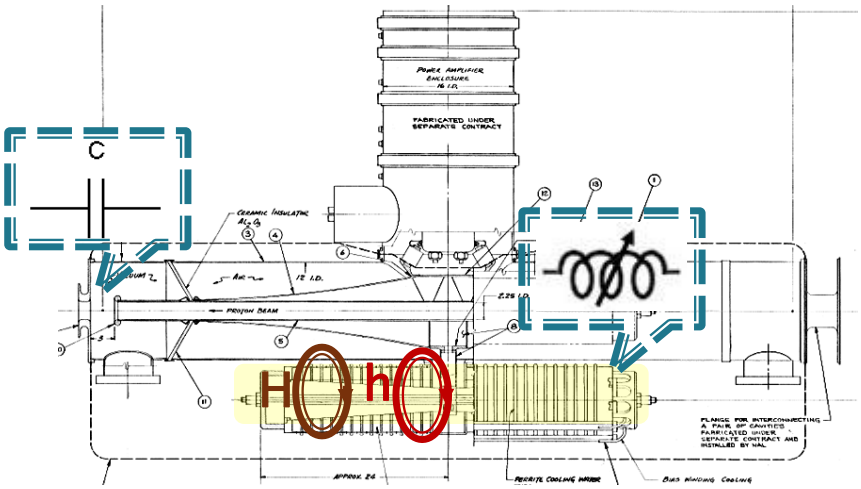

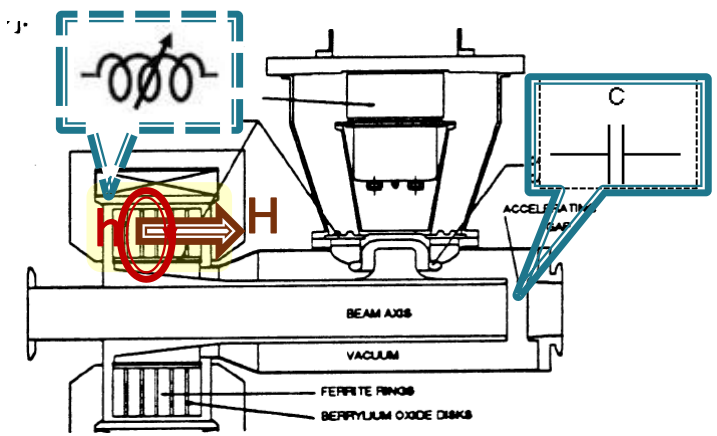

Parallel Biased (Present Style)	Perpendicular Biased
Bias Field is Parallel to the RF Field	Bias Field is Perpendicular to the RF Field
$H\hat{\varphi} + h\hat{\varphi} = (H + h)\hat{\varphi}$	$H\hat{z} + h\hat{\varphi}$ = rotating (on cone) magnetic vector – Gyromagnetic Resonance H=f/2.8
Ferrites with High Saturation Magnetization (Ni-Zn)	Ferrites with Relatively Low Saturation Magnetization (Mn-Zn)
Larger values of Mu (Larger Losses, Lower Q)	Smaller values of Mu (Smaller Losses, Larger Q)

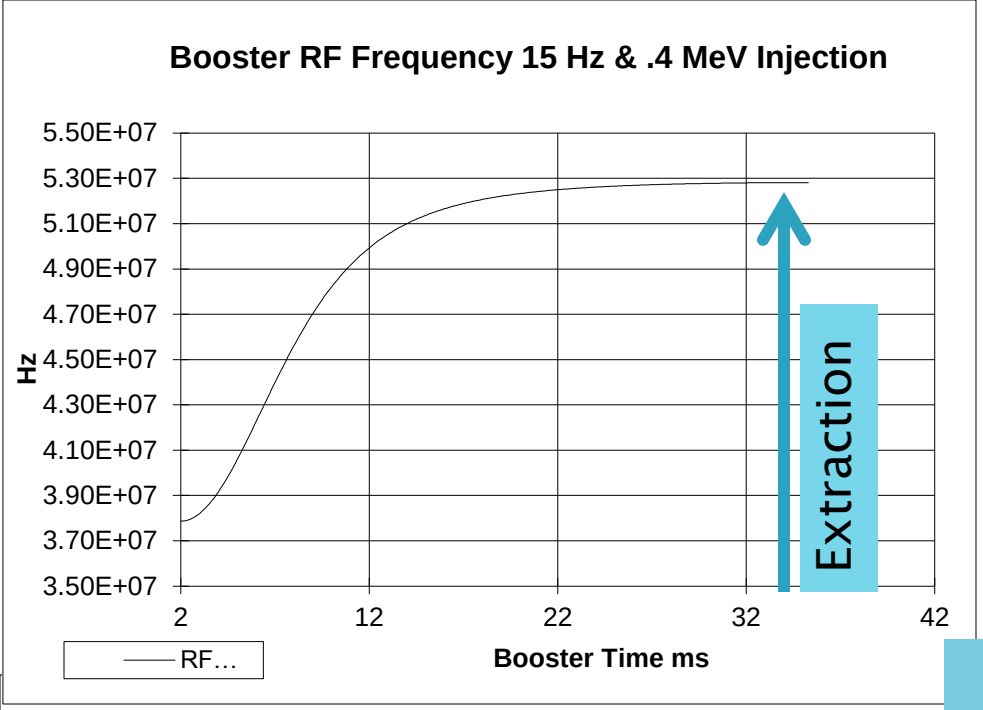

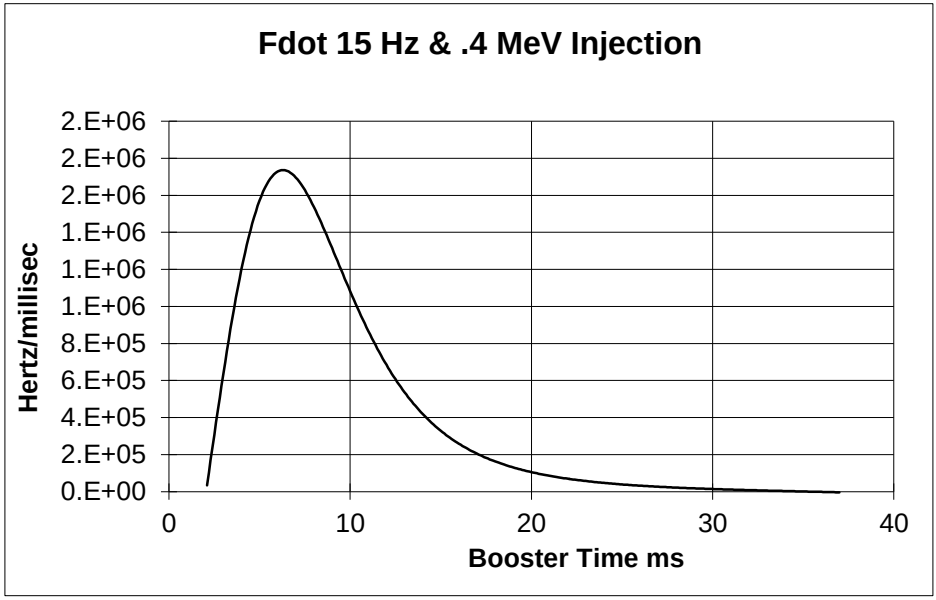

PIP to PIP II RF changes

Assuming no harmonic component to GMPS

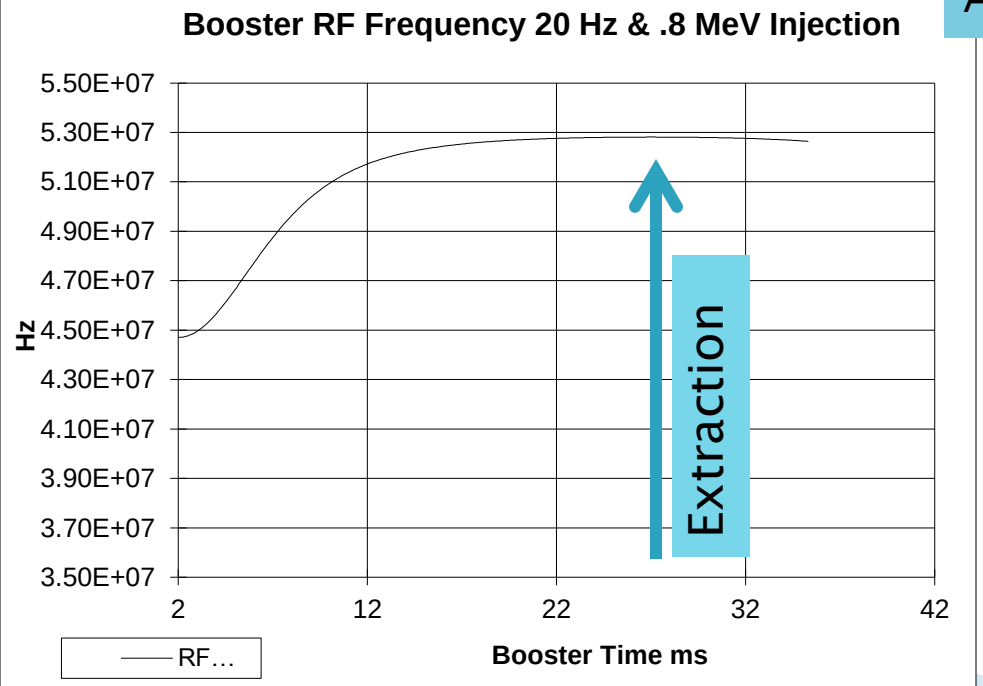

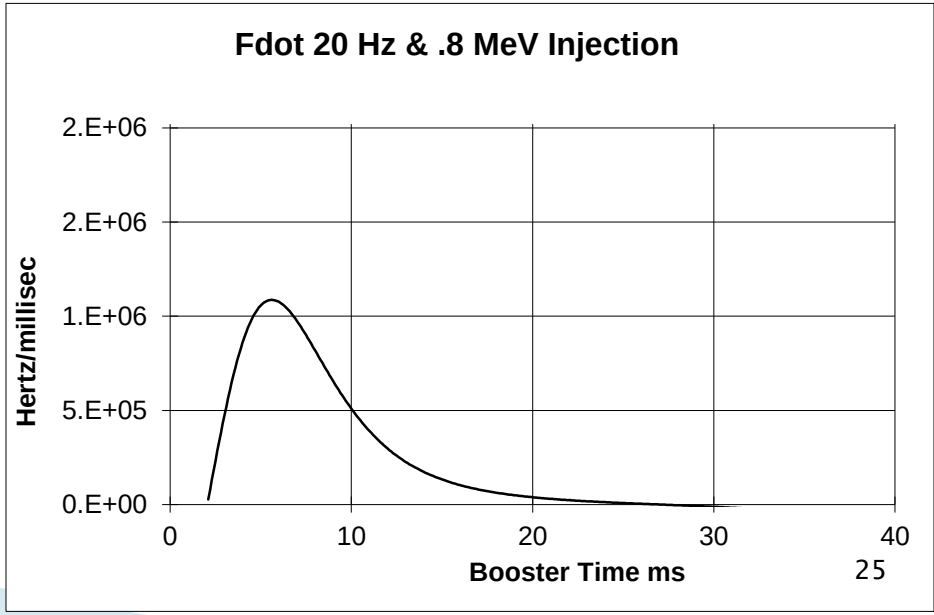

Perpendicular Biased Cavities

Simulations of use at injection for PIP and possible use as main RF cavity is underway

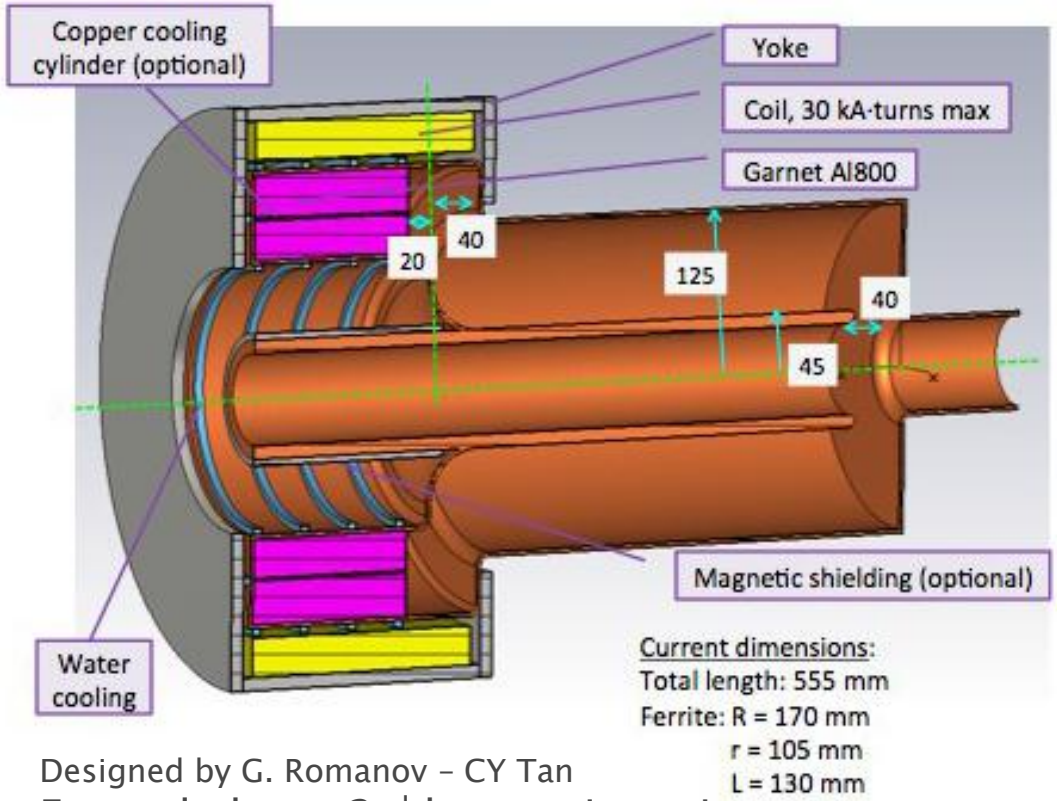

Designed by G. Romanov – CY Tan

Example here: 2nd harmonic cavity

The goal is **100** kV gap for a cavity that is about **half** the length of present Booster/MI cavity
factor of 4x V/m

- Ferrites with relatively low saturation magnetization (Mn–Zn)
- Smaller values of Mu (smaller losses, larger Q)
- Small space required but high gradient
- Cooling is difficult
- Vacuum windows location

Max Electric Field Simulations

Booster Style Cavity

Designed by M. Hassan

Electric Field for 55kV

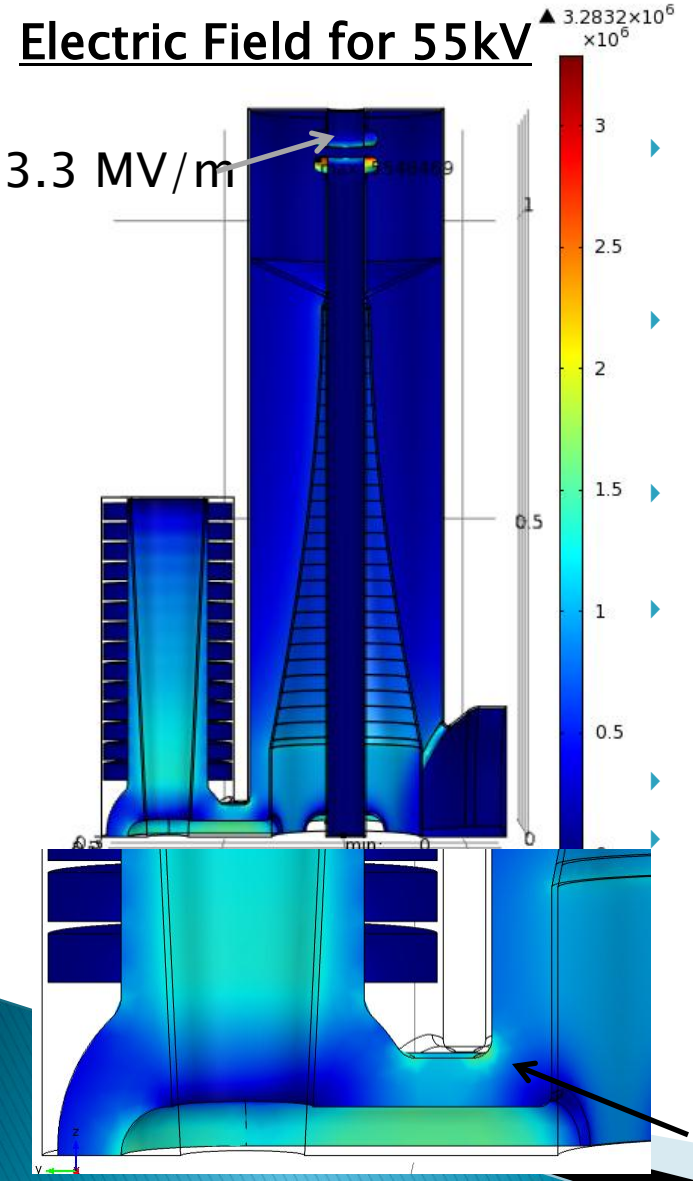

- Ferrites with high saturation magnetization (Ni-Zn)
- Larger values of Mu
  - larger losses, lower Q
- Known technology and operations
- Relatively limited by the heating in the ferrites
- Large size
- Low gradient

Electric Field for 60 kV

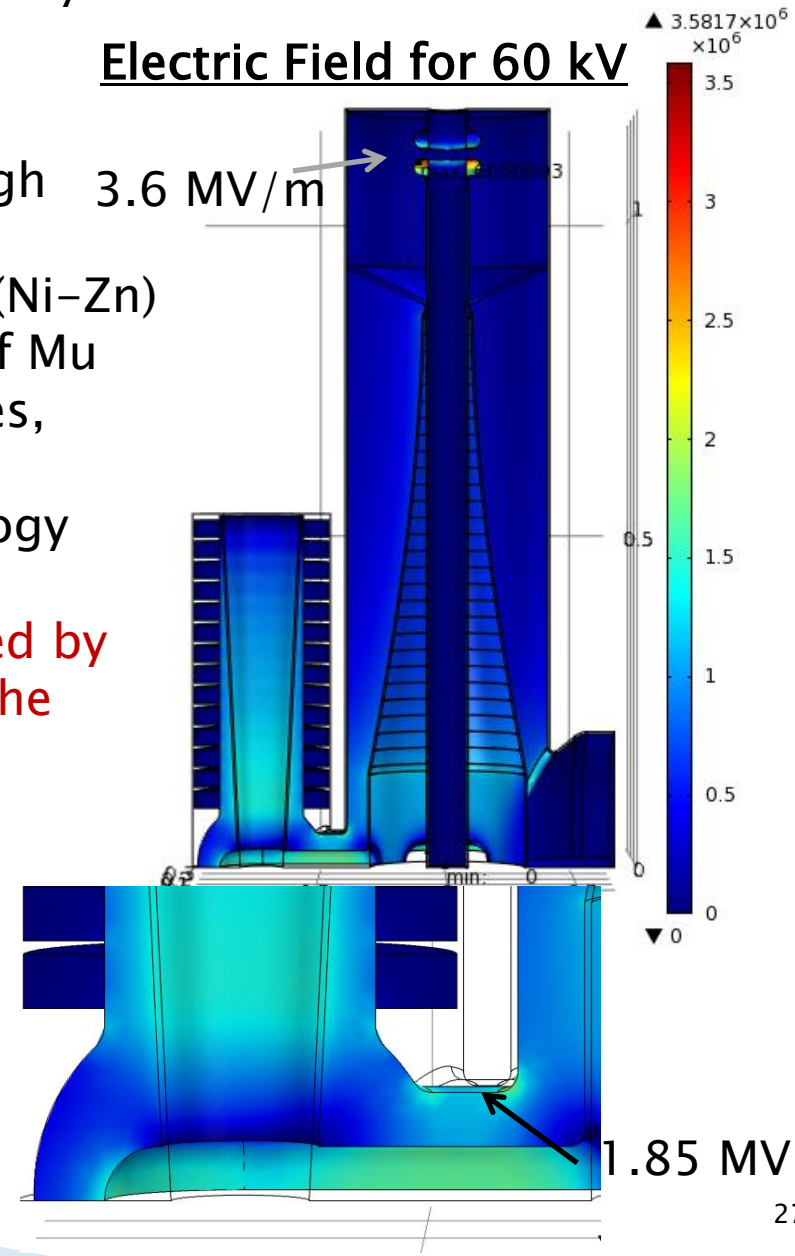

Booster Magnet System

Data from G. Krafczyk

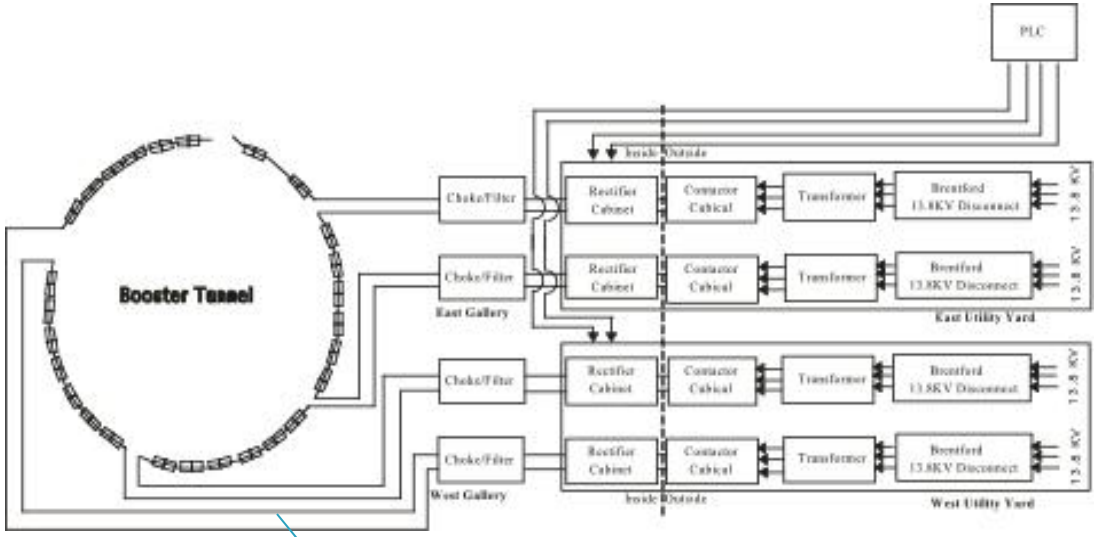

The present system has 96 magnets in a 24 cell arrangement

- The 4 PS's are MR style 720 Hz update rate SCRs
- Regulation is done via a reference magnet with B-dot coil and transductor electronics
- A sinusoidal drive signal is to excite the system
- Corrections for losses and line voltage variations are done by a card in a VXI crate
- Regulation is good to about a part in 4000
- The conversion of GMPS controls from 15 to 20 Hz does not look difficult

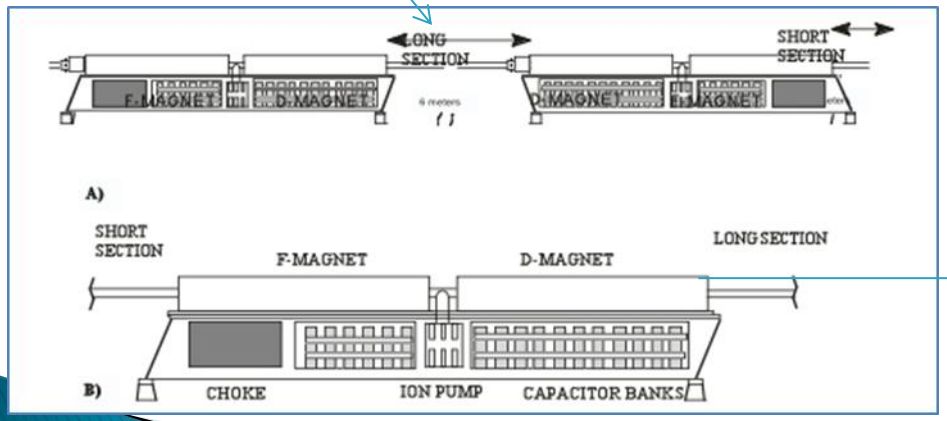

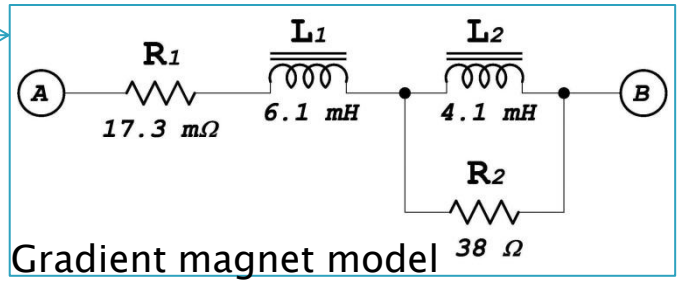

Gradient magnet model

Booster Magnets – 20 Hz

- We have looked at Booster 20 Hz operations several times…most recently by EE support (George Krafczyk)

  'Measurements were performed on both a Booster gradient magnet and a Booster choke with the intent to compare the **15 Hz** losses with the **20 Hz** losses for a proposed Booster upgrade.'

  - This analysis suggests that running the Booster at **20 Hz** with a current equal to the present **15 Hz Booster** will require about **3.9%** more power. Capacitor voltage will increase by about **32%** and the resonant capacitor at each **"Girder"** must decrease from **~8.33 mF** to **~4.69 mF.** This also carries the implication that the **RMS current per uF** will also **increase** as well.

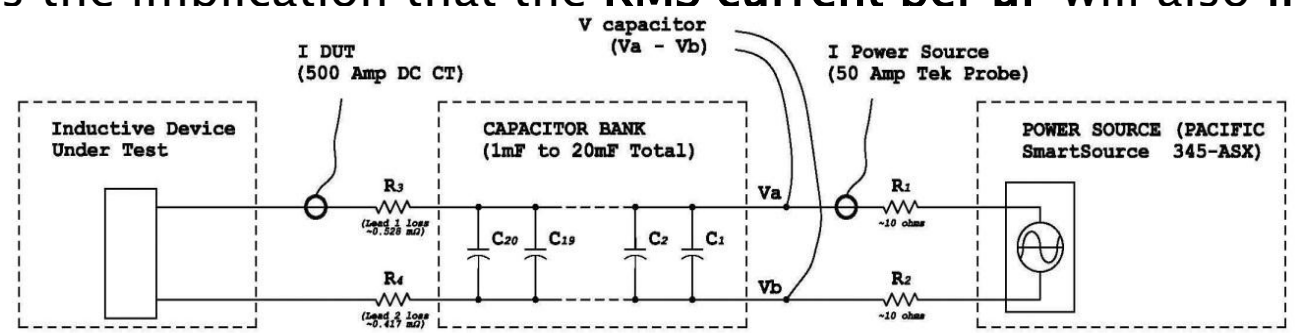

Figure 1 - Resonant Test Circuit To Characterize Inductive Device Under Test

Booster Magnets – 20 Hz

Data from G. Krafczyk

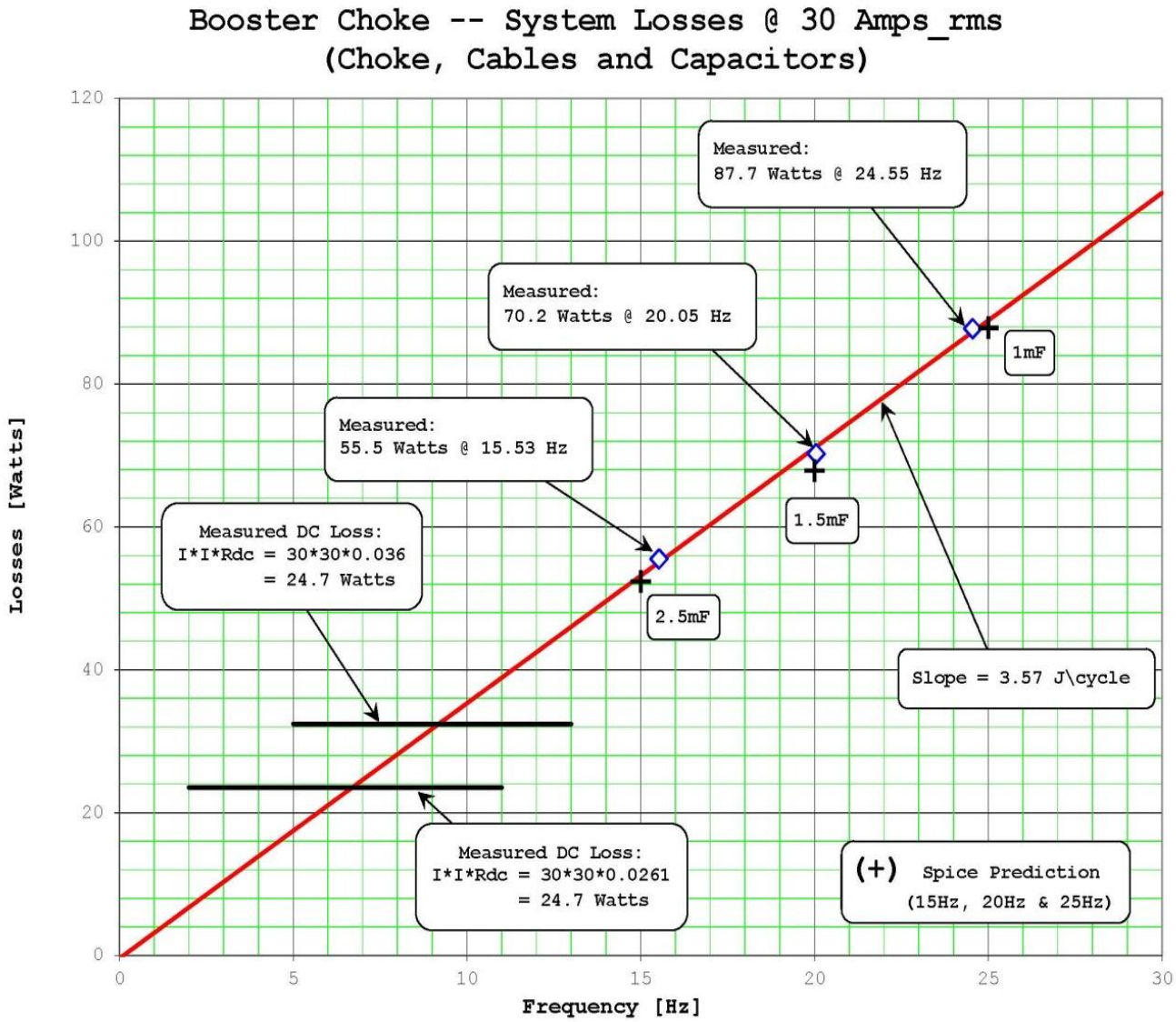

Summary

Girder drive voltage increase by about 9.2 v (p-p)
Capacitor voltage increases by 32%
Slight increase in RMS current for Choke, magnets and caps

Designed to run at 10 GeV (did extract for a brief period at higher energy) the gradient magnet power system is capable of higher voltage operation. Present magnet power system runs on 4 power supplies but can operate with only 3 supplies. Booster at 20 Hz would require all 4 PS to operate.

Kickers and Septa Systems

(Assuming a new injection girder)

Kickers/Notchers

- The average anode current for the extraction kickers will go from ~15mA at 15 Hz at 55KV on the PFL and a 1.8 uS pulse width to ~20mA at 20 Hz. These currents are well within the allowed 2 Amps max average anode current limit for the cx-1168 thyratron. These current levels would also indicate that there will be no excessive heating losses in the RG-220 cables or of the Kicker magnets themselves
- In general one would expect that with the increased rep rate that PFL cable and connection failure rates will also increase
- Average power into the resistive loads will rise from ~400 W to ~540 W under the same conditions. The present loads are already water cooled and the load resistors are rated wattage-wise to be able to work without problems with this increase but will need to be tested at that level none the less

Septa Magnets

- Thermal testing was done on the two spare septa, BSE-105 and BSE-106. The testing on BSE-105 was the most thorough and included 15Hz equivalent runs at 200, 400, 600 and 800 Amps rms
- Testing showed that all the monitored points plateaued within a reasonable time with one exception. This point is on the magnet skin where the power feed-throughs enter and exit the magnet
- External cooling plates were clamped around this area of the magnet. The additional cooling plates showed that the magnet skin temperature in this area plateaued nicely with a temperature reduction of ~8 deg C at the 2.5 hour point
- The present pulse power supplies were designed to handle these higher operating voltages. The ability to run at higher voltage means one could entertain the idea of reducing the output pulse width to reduce the rms current

Misc – 20Hz Operation

- **Controls – need to understand issues and how to best stage work**
  - Software & hardware systems for 20Hz need to be upgraded and/or modified. The entire clock system is based on 15Hz. The following would have to modified.
  - Time Line Generator (TLG), Tevatron Clock System (TCLK), IRM's, Frontends, Beam Budget Monitor
    - What is required for just Booster to operate vs the rest of AD systems?
  - Data collection, data sampling impacting other accelerator controls systems
- Utilities (most updated already under Proton Plan and PIP)
  - Would need to look at feeder situation – already being discussed as a add-on to PIP I or PIP II.
    - Have rough cost estimates from FESS HV personnel
  - Review electrical power, transformers, panels, and cabling to run at 20Hz
    - Not expected to be an issue
- Safety
  - Does the new shielding and improvements work for 20 Hz – need to be discussed

Dampers

Systems are critical present operations and will need to handle higher PIP II intensities and changes to RF cavities

- Longitudinal coupled bunch mode dampers
  - More RF volts?
    - Increase the number of RF cavities from 18 to 21 using present design will increase impedance –
    - Higher peak beam currents
  - PIP I is working on modernizing present longitudinal system (digital) but will it be sufficient for PIP II? (Will operate new system – before making decisions on PIP II)
- Quadrupole dampers
  - Part of understanding transition and longitudinal simulations.
- Transverse dampers
  - PIP I upgrading analog dampers to digital dampers. Need to first operate new system then decide the next step.

Plan

1. Complete a transition document – give it a name other than PIP! Underway
2. Assign some high level management structure Underway
3. Generate a list of tasks Underway
    1. Assign managers Underway
    2. Define goals Underway
    3. Define required resource and schedule (RLS)
        1. Labor, M&S and time
        2. Additional requirements – ie. shutdowns
4. Resource allocation approval

Same process as PIP)

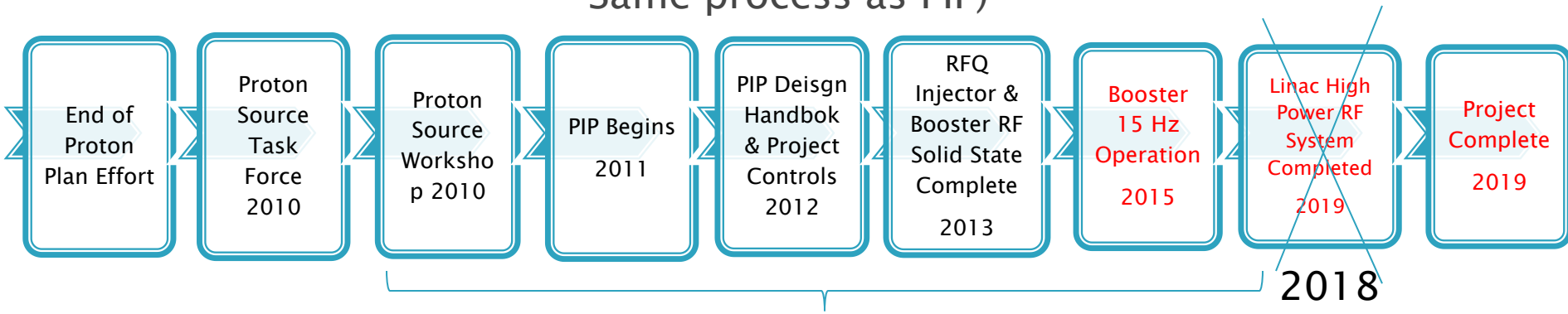

PIP will take ~8 years (with planning and resource fluctuations)

Starting today this transition effort has about 8 years to complete

PIP II Operations – Developing a Strategy

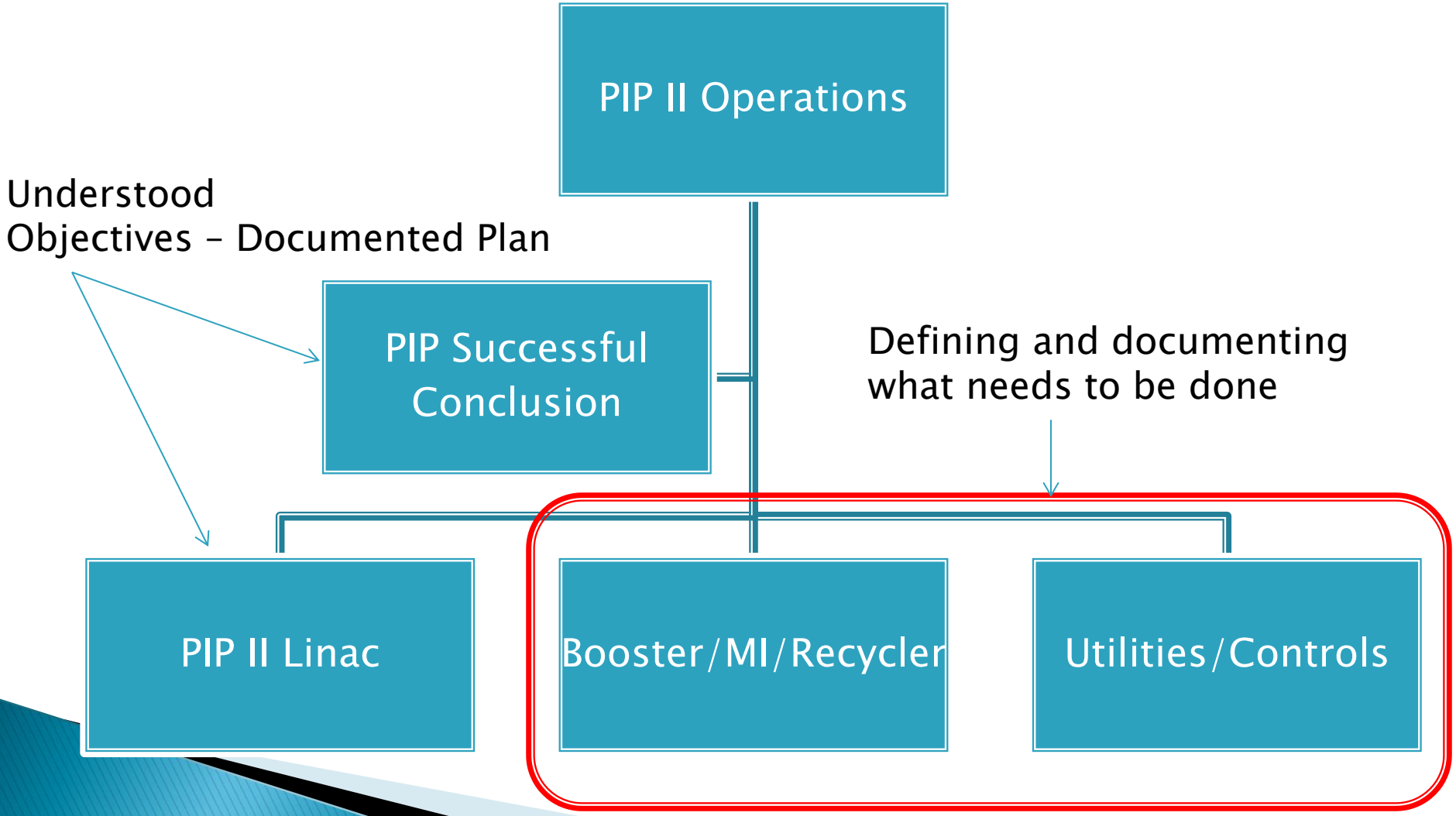

Developing a Strategy

First Step: Produce a document by this spring that outlines the plan

(Steve Holmes et. al)

Proton Improvement Plan/Proton Improvement Plan-II: Transition Plan
October 2014

The Proton Improvement Plan is currently underway with stated goals of achieving reliable, 15 Hz, beam operations of the existing Linac and Booster at a per pulse intensity of 4.2×10^{12} protons, over the period through 2025.

Proton Improvement Plan-II is a proposal for enhanced performance of the proton complex at Fermilab based on the replacement of the existing 400 MeV Linac with a new 800 MeV Superconducting Linac. It is anticipated such a replacement will occur in the 2023-2025 timeframe, and should enable Booster operations at a per pulse intensity of 6.4×10^{12} protons at 20 Hz, over the period through at least 2030. This document describes modifications to the current Proton Improvement Plan and suggested transitional modifications to the accelerator complex, to effectively prepare for and accommodate Proton Improvement Plan-II.

Transition Outline

(Work in progress)

Table of Contents

- Introduction
- Performance Goals
- Goals and Scope of the Proton Improvement Plan (done)
- Goals of PIP (done)
- PIP scope – original and as modified for PIP-II (mostly done – pushing through RLS)
- Deliverables/Key Performance Parameters that will define the completion of PIP
- Goals and Scope of PIP-II
- Goals and Scope of Work for PIP-II
- Booster/Recycler/Main Injector Performance Requirements in the PIP-II Era
- Scope of Work to Prepare Booster/Recycler/Main Injector for PIP-II
- Transition Period Resource Requirements and Schedule

Difficult part – information required may take time…will adjust as required

Developing a Strategy

Second Step: Develop a Resource Loaded Schedule

Produce a RLS , labor and funding profile, that meets the timeline and available resources. Part of the required funding will come from re-purposing some of the PIP funds to align the Booster to PIP II. Additional resources will likely be needed to complete all tasks

'Campaigns' have greater flexibility to adjust to program planning and is our preferred option

PIP Funding Profiles				
	PIP Design Handbook	Revision October 2013	Revision May 2014	Example revision
TOTAL	86,739,203	89,568,000	89,568,000	89,568,000
FY12	17,346,668	13,956,000	13,956,000	13,956,000
FY13	14,779,844	8,612,000	8,612,000	8,612,000
FY14	19,437,625	11,000,000	10,000,000	10,000,000
FY15	19,873,626	15,000,000	12,000,000	8,000,000
FY16	14,188,092	16,000,000	16,000,000	10,000,000
FY17	1,113,348	16,000,000	16,000,000	10,000,000
FY18	0	9,000,000	9,000,000	10,000,000
FY19	0	0	4,000,000	11,500,000
FY20	0	0	0	6,000,000
FY21	0	0	0	1,500,000

Resource profile of past PIP resource adjustments and a possible Booster PIP II work funding profile

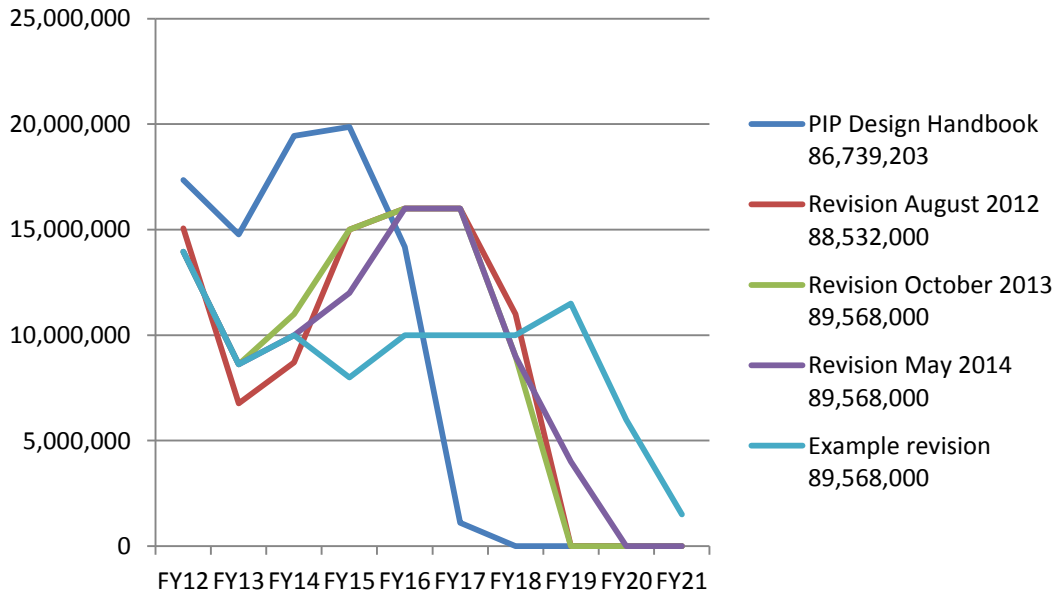

Conclusion

In light of the P5 recommendations and laboratories PIP II plan, PIP objectives have been modified

- This basically means PIP will no longer pursue a total klystron replacement of the Linac low energy high power RF system or replacement of Booster cavities
- However, the basic underlying PIP goals remain in place…to deliver 2.3E17 protons per hour at 15 Hz while maintaining availability > 85% at present activation levels

The lifetime and alignment adjustment to PIP is underway

"and also ensuring a useful operating life of the Linac through 2023 and the Booster source through 2030. "

The transition to PIP II is more than PIP and the first steps have been taken to outline the process.

- A transition document is being prepared and is expected to be released this spring
- This document will describe the transition and tasks required for the Booster (and other AD systems)

"…to deliver 4.7E17 protons per hour at 20 Hz."