Booster Collimator: Simulation with MADX

Valery Kapin

22-Apr-2015

PIP meeting

Outline

- Original software (STRUCT+MARS) – used to predict activation and ring loss profile
- Motivation for re-simulations of booster collimators
- Requirements for tracking software & lattice file
- Suggested software for re-generation of activation and loss profile: MADX+MARS
- MADX: features and necessary implementations (scattering in primary collimators, trapezoidal apertures, initial particle distributions, postprocessing)
- MADX: first results for horizontal collimators

Acknowledments: Mokhov, Striganov, Lebedev, Pronskikh

Original software STRUCT+MARS

STRUCT – particle tracking engine:

- **Accept MAD-8** optics table for lattice generation
- Simulation of lattices with **all types of magnets** in booster - bends, combined function magnets, multipoles (Q,S,O,..14-), RF cavities, drifts, etc.
- Different types of **apertures**
- Use externally generated **particle coord.**
- Treat **interaction of p with material** of collimators (some “old” MARS modules included in STRUCT)
- Output **coords of lost particles** for more comprehensive analysis with MARS-code

STRUCT status

- STRUCT had been developed and supported by only one person (A.D.)
- Very difficult to use w/o his guidance:

➢ Some FORTRAN modules have **several versions**: each for every particular task => many versions of executables

➢ Most **numerical data** for particular task are given **inside source code** (not external files)

➢ No guide/manual **how combine** multiple versions of modules to produce **executable** !

➢ Another drawback: only under **UNIX OS**

work_paint.f
work_paint.f_collim
work_paint.f_Cosin_single_notcher
work_paint.f_Cosin_two_notchers
work_paint.f_Gauss_single_notcher
work_paint.f_Gauss_two_notchers
work_paint.f_Hor_Notcher_L05
work_paint.f_Hor_Notcher_L12
work_paint.f_Hor_Notcher_L12-last
work_paint.f_Ver_Notcher_L05

STRUCT must be replaced by another well–supported modern particle tracking code (e.g. MADX)

STRUCT manual: "4 Accelerator elements aperture

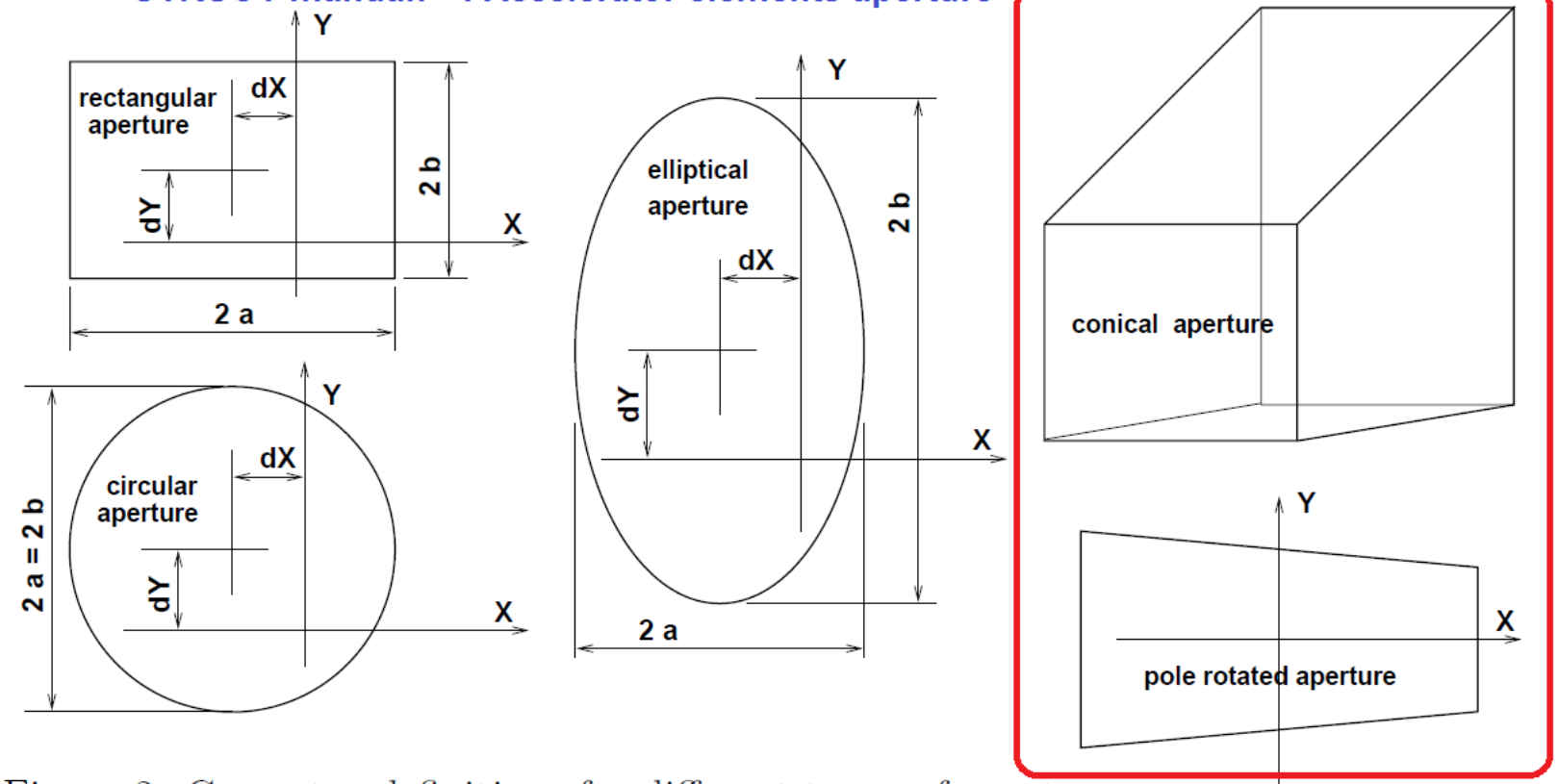

Figure 2: Geometry definitions for different types of aperture.

Example of STRUCT simulations

Booster Collimation and Shielding - N.V. Mokhov, 2010

Proton Source Workshop, Fermilab, December 7-8, 2010

Simulations
for 400 MeV:
0.15mm Carbon Foil
for primary collimator

Reality:
Installed
0.381 mm
Copper foil

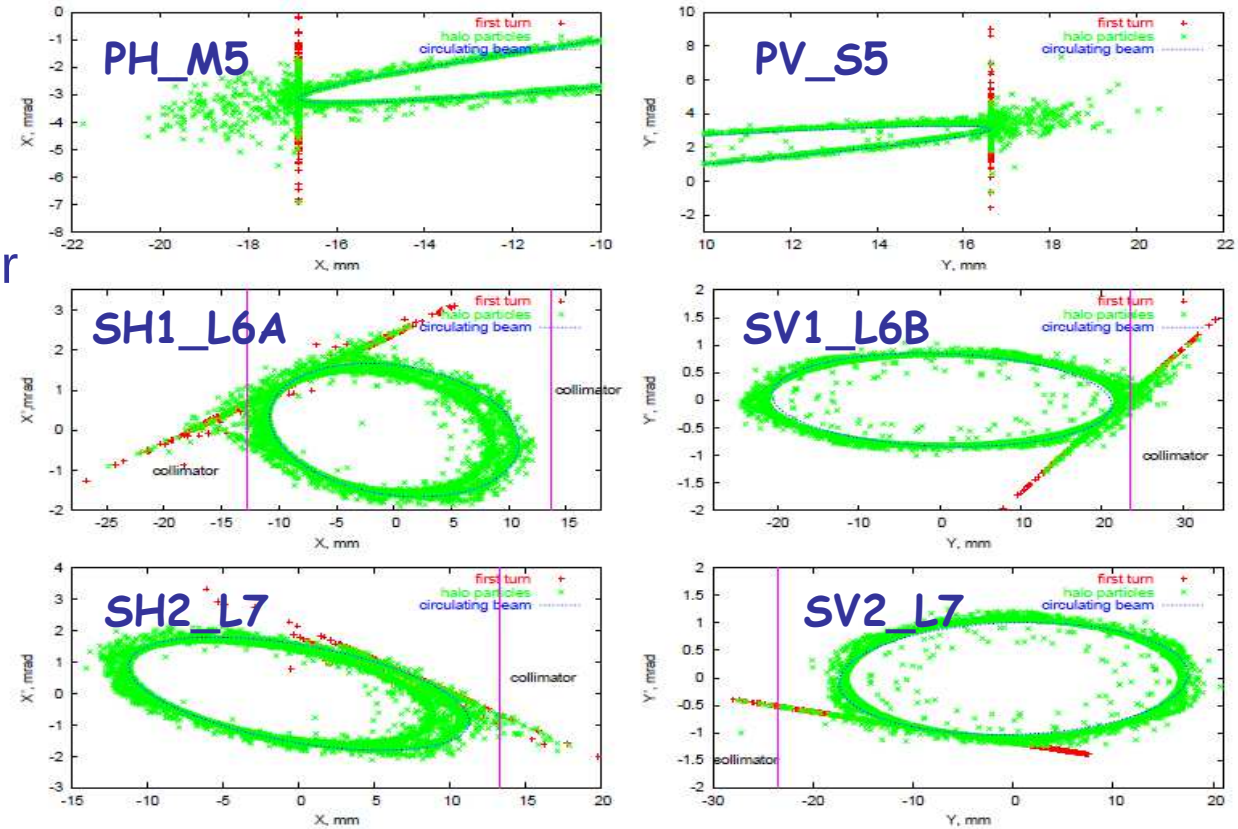

STRUCT

Motivation for re-simulations of booster collimators

N.V. Mokhov, 2015 (e-mail):

As I keep saying for many years, *the parameters of a primary collimator installed in the Booster are very different from what was designed* for the collimation system in 2001.
I reiterated it again … in December 2010, Beams-doc-3734.
… the highest performance of two-stage collimation system in the Booster in simulations …- for the horizontal and vertical primary collimators made of *tungsten 0.003 mm (graphite 0.15 mm) thick at 400 MeV*.
Instead, 0.381 mm copper foil was installed as primary collimator.
As a result, *the performance of such a collimation system was substantially lower* compared to the proposed two-stage collimation system with two primary collimators and three secondary collimators.
The main reason is a very different angular kick given to halo protons by the above copper foil… Thick kick for copper is 11.5 times larger than designed for graphite and tungsten at 400 MeV

Simple analytical evaluations

$$\theta_0 = \frac{13.6\ \mathrm{MeV}}{\beta c p}\, z\, \sqrt{x/X_0}\left[1 + 0.038 \ln(x/X_0)\right] \qquad x[\mathrm{g/cm^2}] = \rho[\mathrm{g/cm^3}] \cdot d[\mathrm{cm}]$$

$$\mathrm{C}: X_0^{\mathrm{C}} = 42.70\ \mathrm{g/cm^2}\ ;\ \rho^{\mathrm{C}} = 2.210\ \mathrm{g/cm^3} \qquad \mathrm{Cu}: X_0^{\mathrm{Cu}} = 12.86\ \mathrm{g/cm^2}\ ;\ \rho^{\mathrm{Cu}} = 9.96\ \mathrm{g/cm^3}$$

$$\sqrt{\frac{\rho^{\mathrm{C}} \cdot d^{\mathrm{C}}}{X_0^{\mathrm{C}}}} = \sqrt{\frac{2.210}{42.70} \cdot d^{\mathrm{C}}} = 0.228 \cdot \sqrt{d^{\mathrm{C}}} \qquad \sqrt{\frac{\rho^{\mathrm{Cu}} \cdot d^{\mathrm{Cu}}}{X_0^{\mathrm{Cu}}}} = \sqrt{\frac{8.96}{12.86} \cdot d^{\mathrm{Cu}}} = 0.834 \cdot \sqrt{d^{\mathrm{Cu}}}$$

Equation for equivalent Cu foil: $0.228 \cdot \sqrt{d^{\mathrm{C}}} = 0.834 \cdot \sqrt{d^{\mathrm{Cu}}}$

$$d^{\mathrm{Cu}} = \left(\frac{0.228}{0.834}\right)^2 \cdot d^{\mathrm{C}} = 0.074 \cdot d^{\mathrm{C}}$$

for $d^{\mathrm{C}} = 0.015\mathrm{cm} \Rightarrow$

$$d^{\mathrm{Cu}} = 0.074 \cdot 0.015 = 0.001\mathrm{cm} = 0.01\mathrm{mm} = 10\mu\mathrm{m}$$

Increase in rms angle for real 0.381mm foil: $\theta_0^{\mathrm{Cu,\,real}} / \theta_0^{\mathrm{Cu,\,ideal}} = \sqrt{0.0381/0.001} \approx 6$

Principle scheme of 2-stage collimation system

Bryant, in CERN Acc. School (1992), p.174

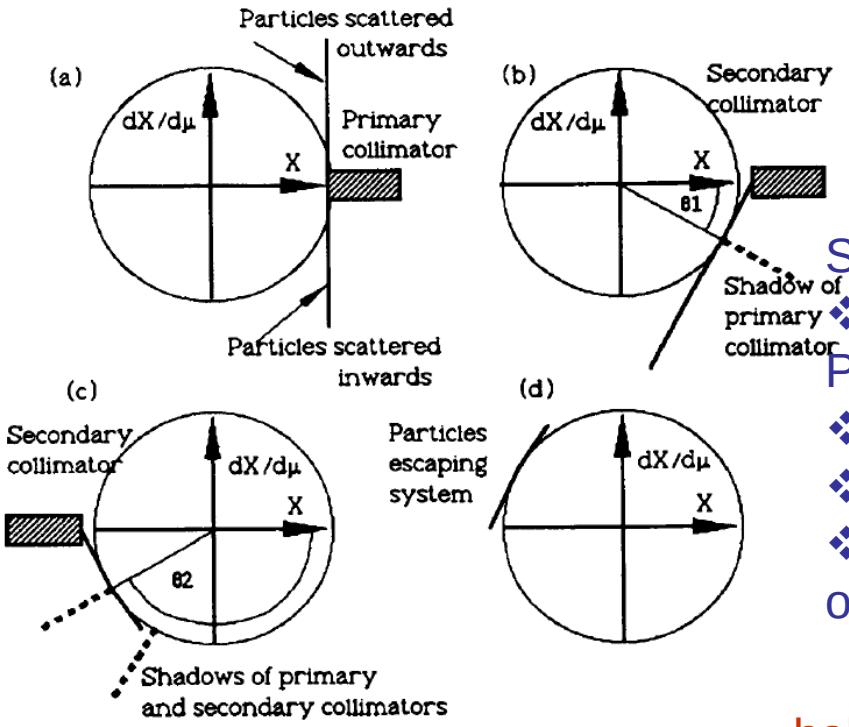

Fig. 11 Main features of a collimation system

The primary collimator is followed by two secondary collimators set at optimized phases for intercepting the scattered particles.

Simulations steps (also in STRUCT):

- ❖Generate **part. distribution** on edge of Prim-Collimator (halo-particles)
- ❖**Scattering** in material of thin P-Coll
- ❖**(Non-linear) Tracking** scattered parts
- ❖Collect **lost particles** on Sec-Colls and other magnet **apertures**

halo particles => large amplitudes => Correct treatment non-linear dynamics

Why MADX ?

- MADX is a successor of **MAD8** and is industry standard. Developed and supported by CERN
- I have a **long-term experience** with MADX: both in development and usage (subjective reason)
- My **collaboration** with CERN on MADX started in **2005**:

❖ **Development** PTC-tracking module using as a prototype thin-lens tracking module

❖ Development **space-charge** version of MADX (now used at CERN, BNL, FNAL)

❖ Particle tracking done with MADX for projects at GSI, ITEP and FNAL

❖ Implemented **fringe-field** treatments for Muon-Colliders (DynAp-studies) via generating and importing COSY-infinity maps

MADX as a substitute of STRUCT

1) Booster **lattice file** is already in MADX format (no need for import), even used as tracking engine for Booster LOCO code
2) Nonlinear tracking of halo particles – MADX is proven to be **simplectic & benchmarked** tracking code.
3) Fortran subroutines for simulations of **scattering in Prim-Collimators** from MARS can be **also** used (done!)
4) Initial particle distributions can be **also generated** and accepted for tracking (done with MADX internal macros !)
5) Most of **Apertures** (Rect., Elliptical, Racetrack) with offsets are implemented for thin-track module + **trapezoidal** has been *added*
6) Table with **lost particles** is also available (Thin-track) for further usage with MARS (post-processing & plots with gnuplot)
7) **MADX extensions** to treat both **space-charge** effects (affect on phase-advance) and **fringe fields** (large particle amplitudes) are available, if needed

Booster lattice file – many versions

All MAD-8/MADX lattice files **w/o any apertures**,

apertures ***only in STRUCT lattice files***

booster_**madx**_rev4829472d

list of mad8 lattices under considerations

No	Name lattice file	used/e
1	**booster_Rev_#e92eec60_20130405.mad8**	**use1**
2	booster_coll-2011-Kiomy.mad.20120621.mad8	exclud
3	**booster_coll-2011.mad.20120411.mad8**	**use1**
4	*booster.mad_Yuri_Alexahin_2011.20110303.mad8*	*~akin* .
5	*booster.mad_Bill_Pellico_2009.20090107.mad8*	*~akin* . 3)
5a	booster.mad_Bill_Pellico_2009.**20091118**.mad8	exclud
5b	**booster.mad_Bill_Pellico_2009.20100303.mad8**	**use1**
5c	booster.mad_Bill_Pellico_2009.**2009118**.mad8	exclud
5d	booster.mad_Bill_Pellico_2009.**20091118**.mad8	exclud
6	booster.mad_V1.7e_NEW_dog03-No13_NewMilorad_orb01_NOcorr.**20110107**.mad8	**use2**
6a	booster.mad_V1.7e_NEW_dog03-No13_NewMilorad_orb01_NOcorr.20091001.mad8	exclud (diff 1=
6b	**booster.mad_V1.7e_NEW_dog03-No13_NewMilorad_orb01_NOcorr_Apr2010.20130214.mad8**	**use1 (64=-1+**
6c	booster.mad_V1.7e_NEW_dog03-No13_NewMilorad_orb01_NOcorr.**20100408**.mad8	excude (diff 6 3=-0+1
6d	booster.mad_V1.7e_NEW_dog03-13_NewMilorad_orb01_corr2_STRUCT.**20080304**.mad8	**use3 (diff 6** 89=-7+
6e	booster.mad_V1.7e_NEW_dog03-No13_NewMilorad_orb01_NOcorr.**20091001**.mad8	excluded (=6a)
6f	booster.mad_V1.7e_NEW_dog03-No13_NewMilorad_orb01.**20070104**.mad8	**use4**
6g	booster.mad_V1.7e_NEW_dog03-No13_NewMilorad_orb01_NOcorr.**20091001**.mad8	excluded(=6a)
6h	booster.mad_V1.7e_NEW_dog03-No13_NewMilorad_orb01_NOcorr.20090610.mad8	excluded(=6a)
7	booster_vorobiev_mad.20080305.mad8	**use1**
8	booster.mad.kriol.**20001121**.mad8	obsolete ?!

STRUCT “LAT92.INP_coll-2011”: Apertures

I[1]	APRI[2] mm/in	APZI mm/in.	KAPEI[3]	description
1	57.15/2.25"	57.15/2.25"	2-CIRC[4]	circular pipe with radius R=2.25" (R=0.05715m)
2	76.2/	28.57	5-D-trap[5]	trapezoidal aperture
3	127./5.00"	127./5.00""	2-CIRC	circular pipe with radius R=5.00" (R=0.127m)
4	67.45	32.5/	1-RECT[6]	rectangle with **half**(?) sizes *a*=0.06745m, *b*=0.0325m
5	150.	150.	1-RECT	rectangular case(shell) for collimators with **half**(?) sizes *a*=0.150m,b=0.150m primary collimators: PHCOLL, PVCOLL
6	41.275/1.625"	41.275/1.625"	2-CIRC	circular pipe with radius R=1.625" (R=0.041275m)
7	11.4	12.0	1-RECT	rectangle with **half**(?) sizes *a*=0.0114m,b=0.012m
8	29.31	63.5	1-RECT	rectangle with **half**(?) sizes *a*=0.02931m,b=0.0635m
9	50.	50.	1-RECT	rectangular shell for collimators with **half**(?) sizes *a*=0.050m,b=0.050m ????! secondary collimators: SHCOL1, SVCOL1, SHCOL2
10	37.46	33.65	1-RECT	rectangle with **half**(?) sizes *a*=0.03746,b=0.03365m
11	63.5	29.31	1-RECT	rectangle with **half**(?) sizes *a*=0.0635,b=0.02931m
12	82.5	20.83	6-F-trap[7]	trapezoidal aperture
13	76.2 3.0"	76.2/ 3.0"	2-CIRC	circular pipe with radius R=3"
14	16.	22.0	1-RECT	rectangle with **half**(?) sizes *a*=0.016m, *b*=0.022 m

[1] *I* is number of aperture in the list which corresponds to CODAPE in the lattice part (below)
[2] APRI and APZI are hor. and vert. half aperture sizes, respectively [mm]
[3] KAPEI type of aperture in STRUCT
[4] CIRC is for circular aperture in STRUCT
[5] trapezoidal aperture in booster's combined function Defocusing magnets
[6] RECT is for rectangular aperture in STRUCT
[7] trapezoidal aperture in booster's combined function Focusing magnets

Only circular, rectangular and trapezoidal apertures

STRUCT “LAT92.INP_coll-2011”: element locations in booster_madx_rev4829472d (cells 5 – 7 near collimators has been revised)

Booster Tunnel Map

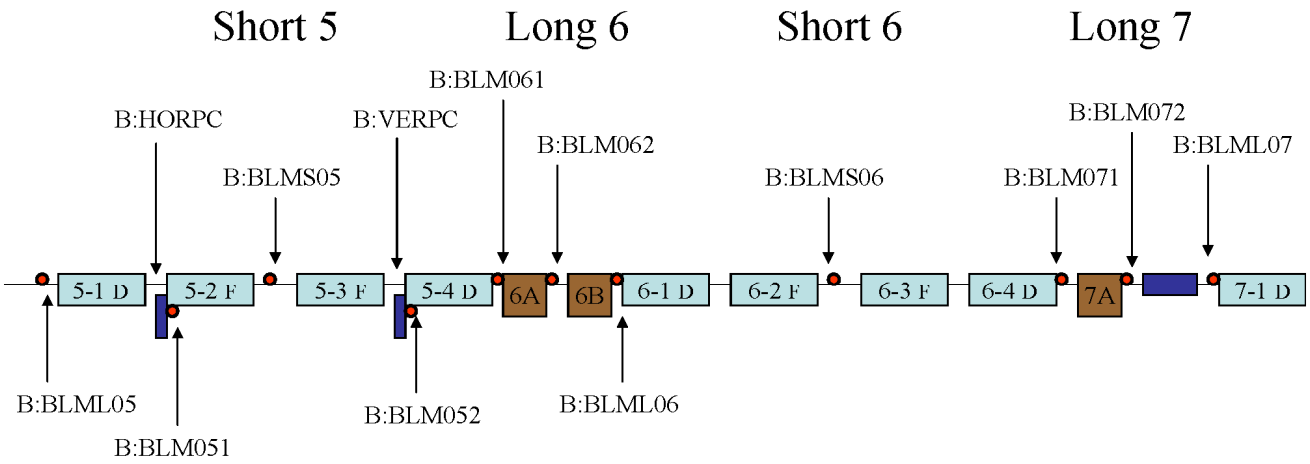

B:S5PCH - upstream mini-straight of Period 5
B:S5PCV - downstream mini-straight of Period 5
6A - upstream end of Long 6
6B - downstream end of Long 6
7A – upstream end of Long 7

2005 Sullivan & Pellico in DOE review

cells 5 – 7 near collimators: Cell 5

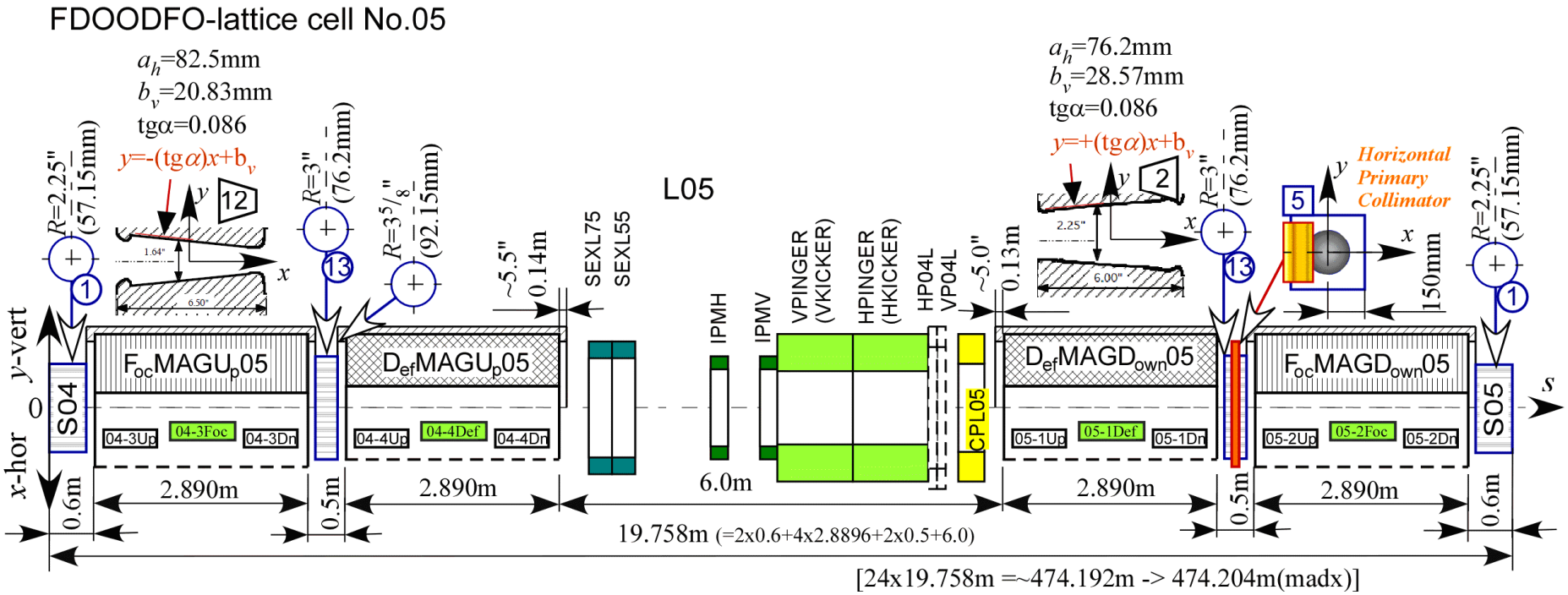

cells 5 – 7 near collimators: Cell 6

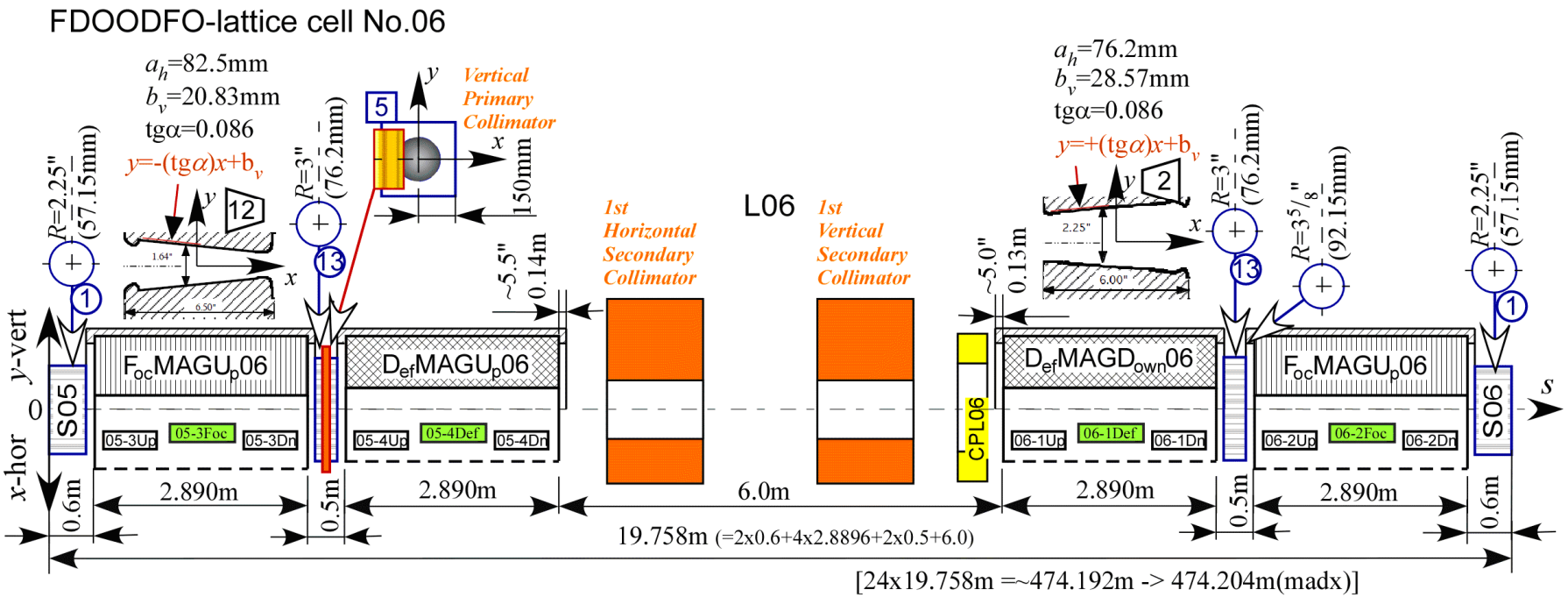

Long 6 in details (photos from my tunnel visit)

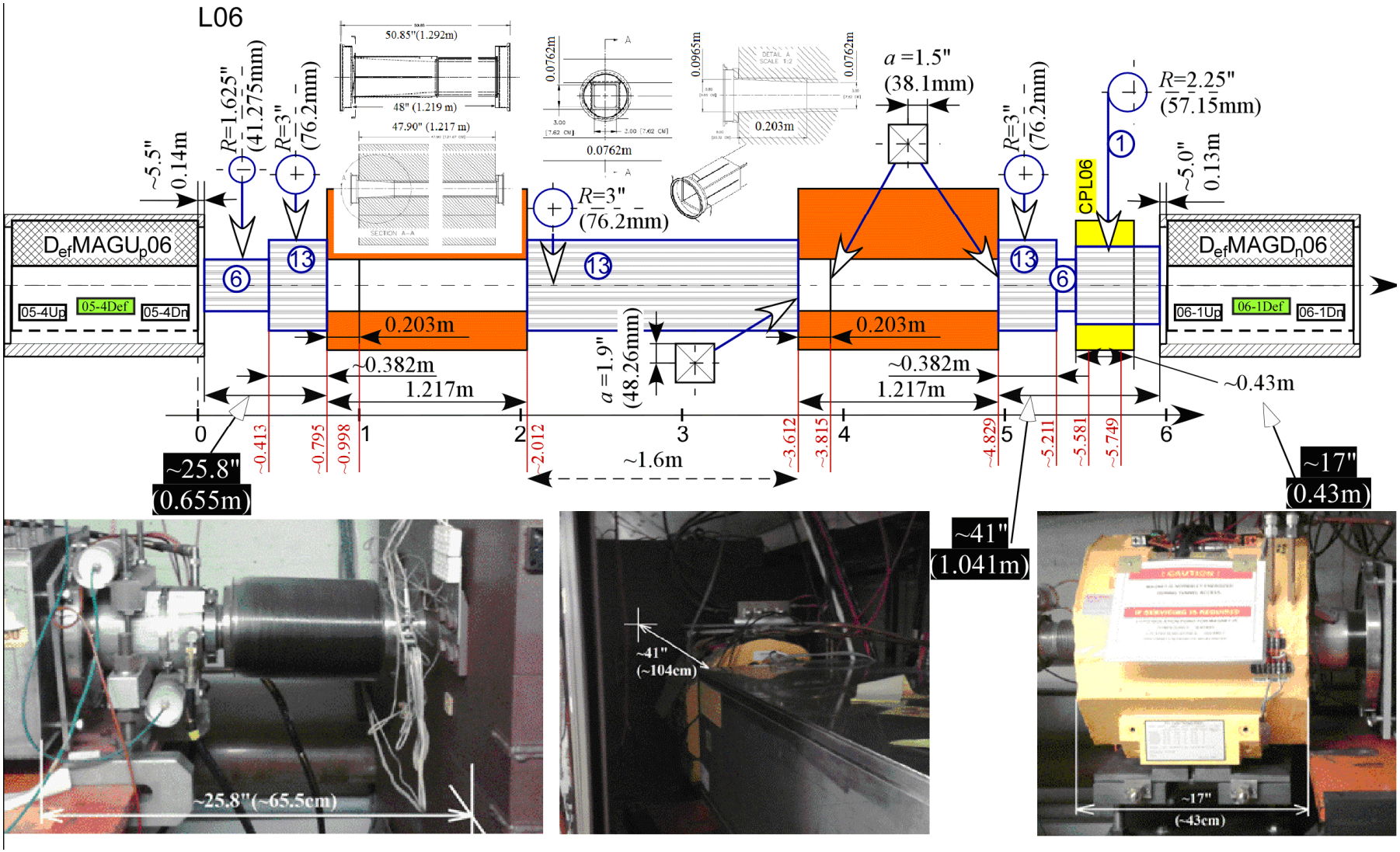

Long 6: revised vs STRUCT & MADX lattices

STRUCT:
"LAT92.INP_coll-2011"

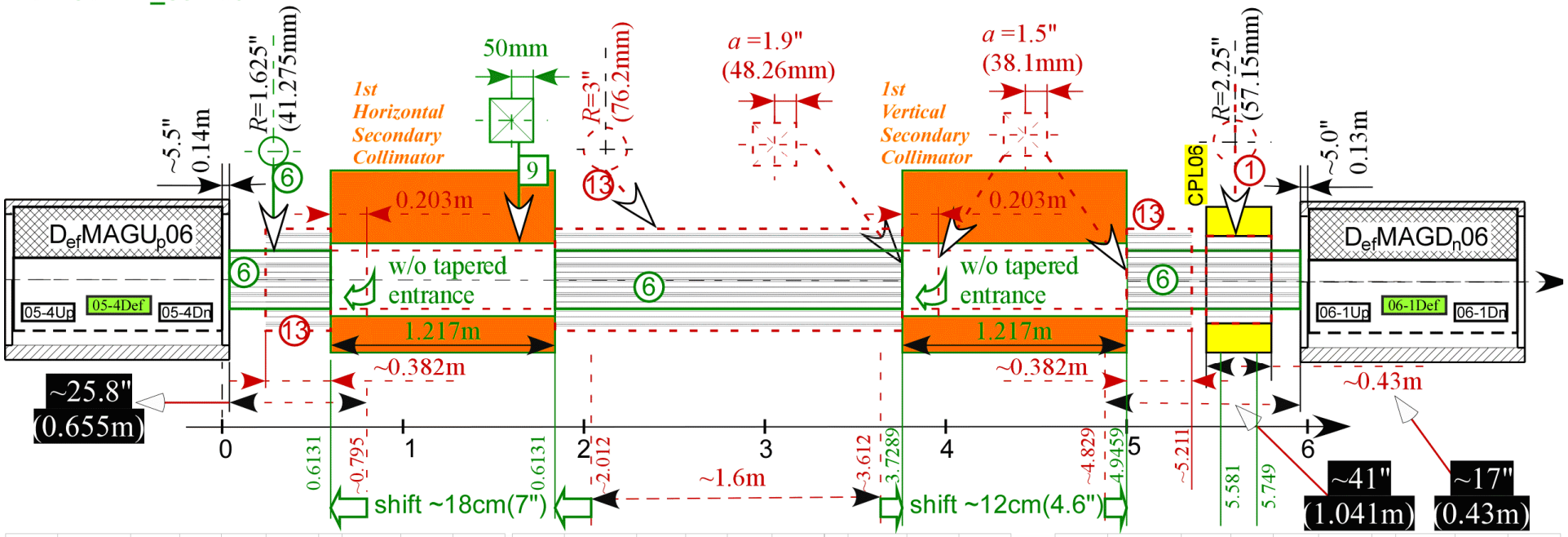

Name	STRUCT/MAD	FL [m]	lc [m]	s_Long	S_m	I	KAPEI	R, mm	Z,mm
DMAGU06	DHB/rbend	1.4448	6.8792	0	104.925	2	-//-	-//-	-//-
L06A	DR	0.6131	7.4923	0.6131	105.538	6	2-CIRC	41.275	41.275
wallh1	DR	0	7.4923	0.6131	105.538	6	2-CIRC	41.275	41.275
SHCOL1	P/SCRAP	1.217	8.7093	1.8301	106.755	9	1-R/case	50	50
L06B	DR	1.1699	9.8792	3	107.925	6	2-CIRC	41.275	41.275
ss	DR	0	9.8792	3	107.925	6	-//-	-//-	-//-
ss	DR	0.6	10.479	3.6	108.525	6	-//-	-//-	-//-
SPACE2	DR	0.1289	10.608	3.7289	108.654	6	-//-	-//-	-//-
wallhv	DR	0	10.608	3.7289	108.654	6	2-CIRC	41.275	41.275

Name	STRUCT/MAD	FL [m]	lc [m]	s_Long	S_m	I	KAPEI	R, mm	Z,mm
SVCOL1	P/SCRAP	1.217	11.825	4.9459	109.871	9	1-R/case	50	50
L06D	DR	0.0641	11.889	5.01	109.935	6	2-CIRC	41.275	41.275
HP06L	DR	0.095	11.984	5.105	110.03	6	-//-	-//-	-//-
VP06L	DR	0.095	12.079	5.2	110.125	6	-//-	-//-	-//-
L06E	DR	0.315	12.394	5.515	110.44	6	2-CIRC	41.275	41.275
DR9	DR	0.066	12.46	5.581	110.506	6	-//-	-//-	-//-

Name	STRUCT/MAD	FL [m]	lc [m]	s_Long	S_m	I	KAPEI	R, mm	Z,mm
HL06	DR	0.024	12.484	5.605	110.53	6	-//-	-//-	-//-
VL06	DR	0.024	12.508	5.629	110.554	6	2-CIRC	41.275	41.275
QL06	DR	0.024	12.532	5.653	110.578	6	-//-	-//-	-//-
BPML06	DR	0.024	12.556	5.677	110.602	6	-//-	-//-	-//-
QSL06	DR	0.024	12.58	5.701	110.626	6	2-CIRC	41.275	41.275
SXL06	SEXT	0.024	12.604	5.725	110.65	6	-//-	-//-	-//-
SSL06	DR	0.024	12.628	5.749	110.674	6	-//-	-//-	-//-
DR9	DR	0.066	12.694	5.815	110.74	6	-//-	-//-	-//-
L06F	DR	0.185	12.879	6	110.925	6	2-CIRC	41.275	41.275

MADX-lattice rev. 4829472d (2014): SHCOL1(0.6m), SVCOL1(0.6m), SHVCOL(0.6) - all 3 in L06 - initial 2003 STRUCT's version

cells 5 – 7 near collimators: Cell 7

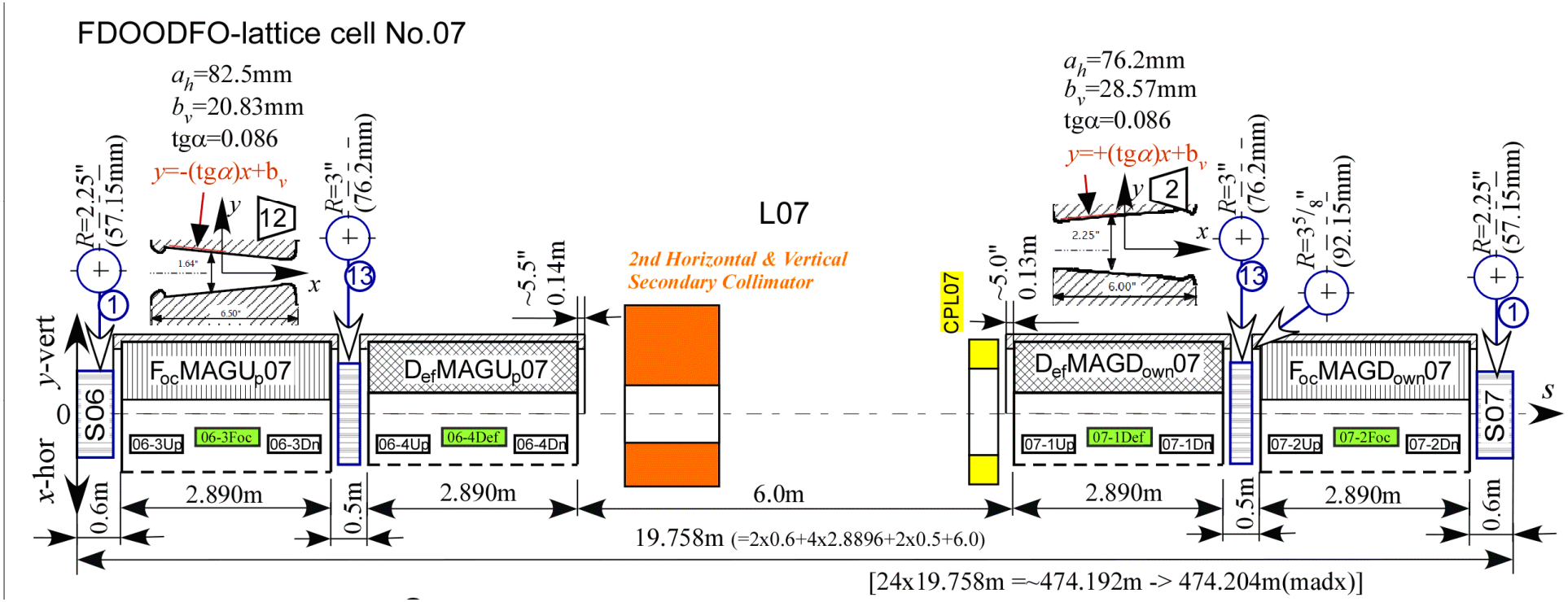

Long 7: in details (photos from my tunnel visit)

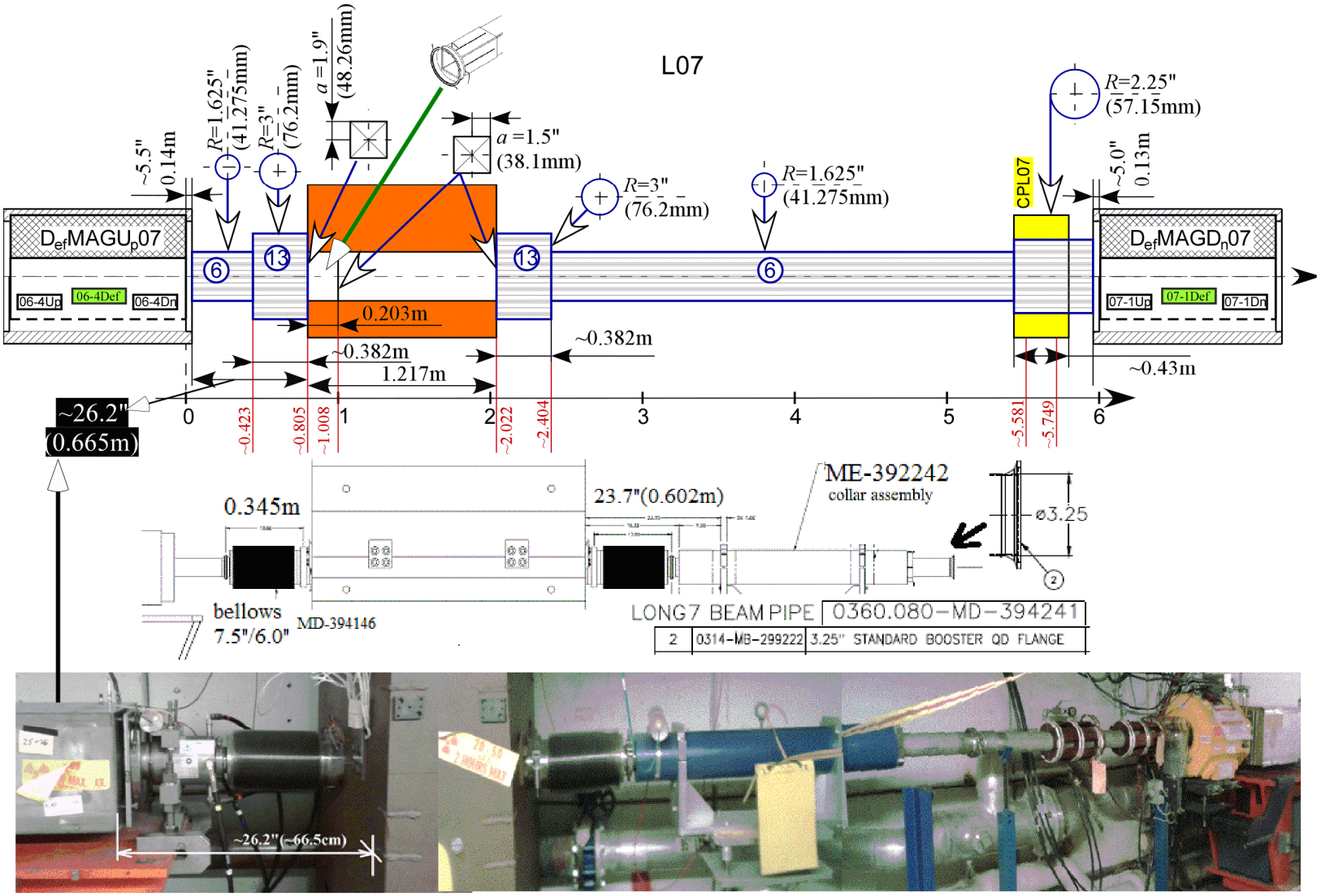

Long 7: revised vs STRUCT & MADX lattices

STRUCT:
"LAT92.INP_coll-2011"

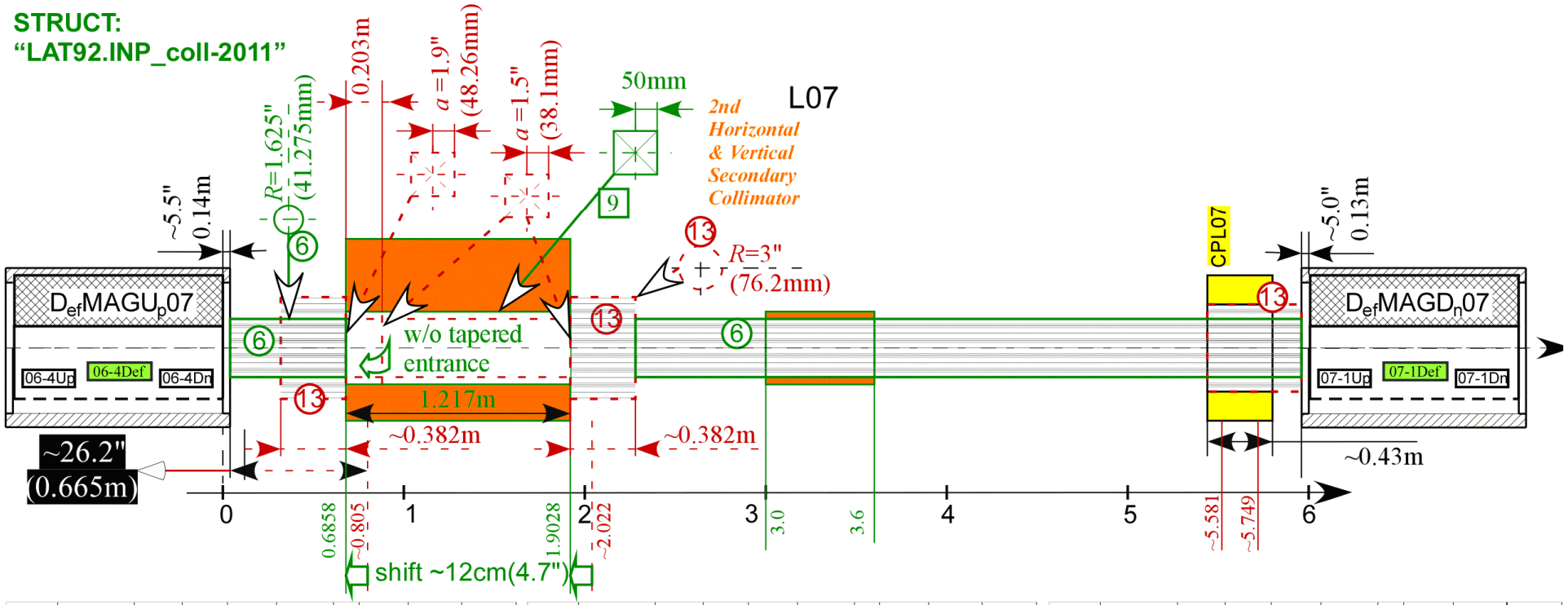

Name	STRUCT/MAD	FL [m]	lc [m]	s_Long	S_m	I	KAPEI	R, mm	Z,mm
DMAGU0	DHB/rbend	1.4448	6.8792	0	124.683	2	-//-	-//-	-//-
L07A	DR	0.6858	7.565	0.6858	125.369	6	2-CIRC	41.275	41.275
wallh2	DR	0	7.565	0.6858	125.369	6	-//-	-//-	-//-
SHCOL2	P/SCRAP	1.217	8.782	1.9028	126.586	9	-//-	-//-	-//-
L07B	DR	1.0972	9.8792	3	127.683	6	-//-	-//-	-//-
wallv2	DR	0	9.8792	3	127.683	6	-//-	-//-	-//-

Name	STRUCT/MAD	FL [m]	lc [m]	s_Long	S_m	I	KAPEI	R, mm	Z,mm
SVCOL2	DR	0.6	10.479	3.6	128.283	6	-//-	-//-	-//-
L07C	DR	0.51	10.989	4.11	128.793	6	-//-	-//-	-//-
SEXL67	DR	0.3	11.289	4.41	129.093	6	-//-	-//-	-//-
L07D	DR	0.15	11.439	4.56	129.243	6	-//-	-//-	-//-
SEXL47	DR	0.3	11.739	4.86	129.543	6	-//-	-//-	-//-
L07E	DR	0.15	11.889	5.01	129.693	6	-//-	-//-	-//-
HP07L	DR	0.095	11.984	5.105	129.788	6	-//-	-//-	-//-
VP07L	DR	0.095	12.079	5.2	129.883	6	-//-	-//-	-//-
L07F	DR	0.315	12.394	5.515	130.198	6	-//-	-//-	-//-
DR9	DR	0.066	12.46	5.581	130.264	6	-//-	-//-	-//-

Name	STRUCT/MAD	FL [m]	lc [m]	s_Long	S_m	I	KAPEI	R, mm	Z,mm
HL07	DR	0.024	12.484	5.605	130.288	6	-//-	-//-	-//-
VL07	DR	0.024	12.508	5.629	130.312	6	-//-	-//-	-//-
QL07	DR	0.024	12.532	5.653	130.336	6	-//-	-//-	-//-
BPML07	DR	0.024	12.556	5.677	130.36	6	-//-	-//-	-//-
QSL07	DR	0.024	12.58	5.701	130.384	6	-//-	-//-	-//-
SXL07	SEXT	0.024	12.604	5.725	130.408	6	-//-	-//-	-//-
SSL07	DR	0.024	12.628	5.749	130.432	6	-//-	-//-	-//-
DR9	DR	0.066	12.694	5.815	130.498	6	-//-	-//-	-//-
L07G	DR	0.185	12.879	6	130.683	6	-//-	-//-	-//-

MADX-lattice rev. 4829472d (2014): SHCOL2(0.6m) and SVCOL2(0.6m) - 2 in L07 - initial 2003 STRUCT's version

Generation of initial particle distribution

done with MADX internal macros !

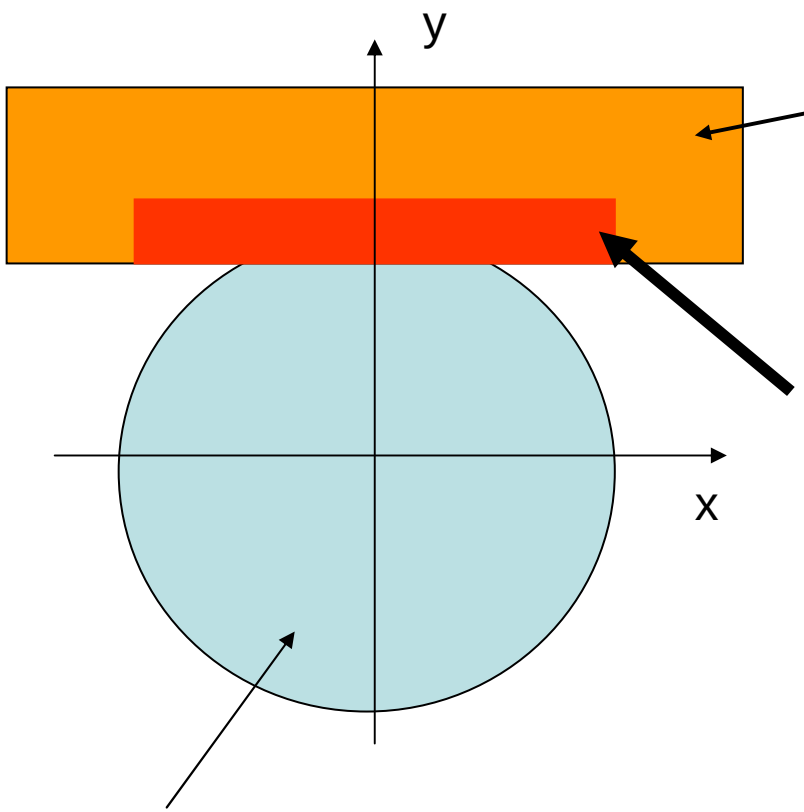

Beam halo: strip ~ 10μm
Along x – Gaussian
Along y – 1/r
y' ~ dβ/ds; x' (? Gaussian)

Beam-core is not normally simulated, but its action via S.C. can be added

MADX: initial particle distribution at H-Prim

segm#0001; elem#00000; turn#000000; Ntracks=0010000; el-name <<start>>

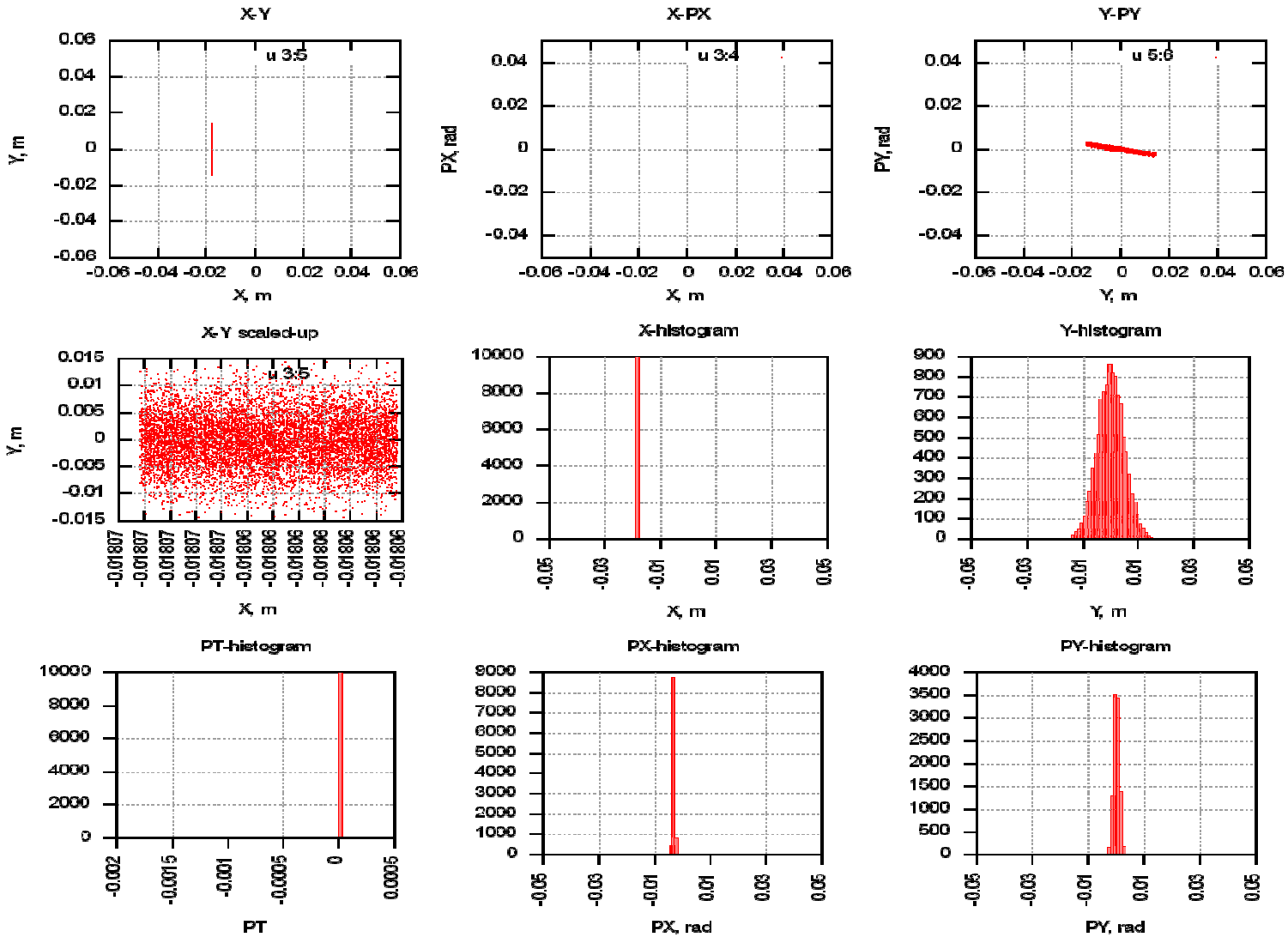

MADX: initial particle distribution at H-Prim

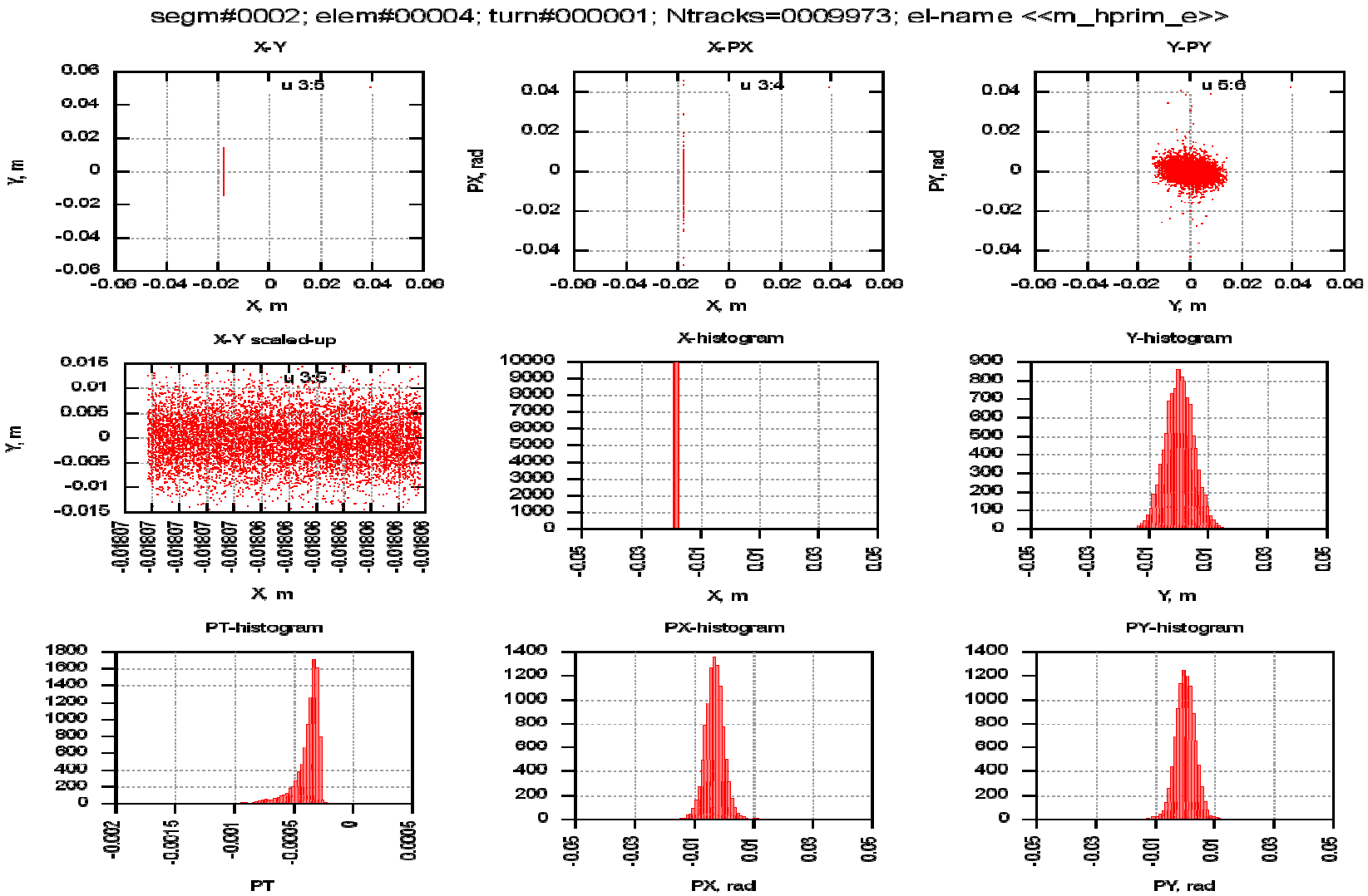

New apertures in MADX (for thin-track)

Add into MADX thin-track module:

- apertype=Trapezoidal
- Apertype=hprimcoll or vprimcoll

```
FMAG_c:  SBEND, APERTYPE= FOCTRAPEZOID,
                                        APERTURE={0.0825,0.02083,0.086};


hprim_l0: rcollimator, l=0, APERTYPE=hprimcoll,
                APERTURE={xsize_hprim,ysize_hprim},
                APER_OFFSET={x_hprim_neg_offset,0.0},
                PRIM_COLL_MATTER=copper,
                DP_RELATIVE_DROP=0.9, MATTER_THICKNESS_M=0.000381;
```

MADX: first results for horizontal collimators

Distribution of particle losses (total 10k particles)

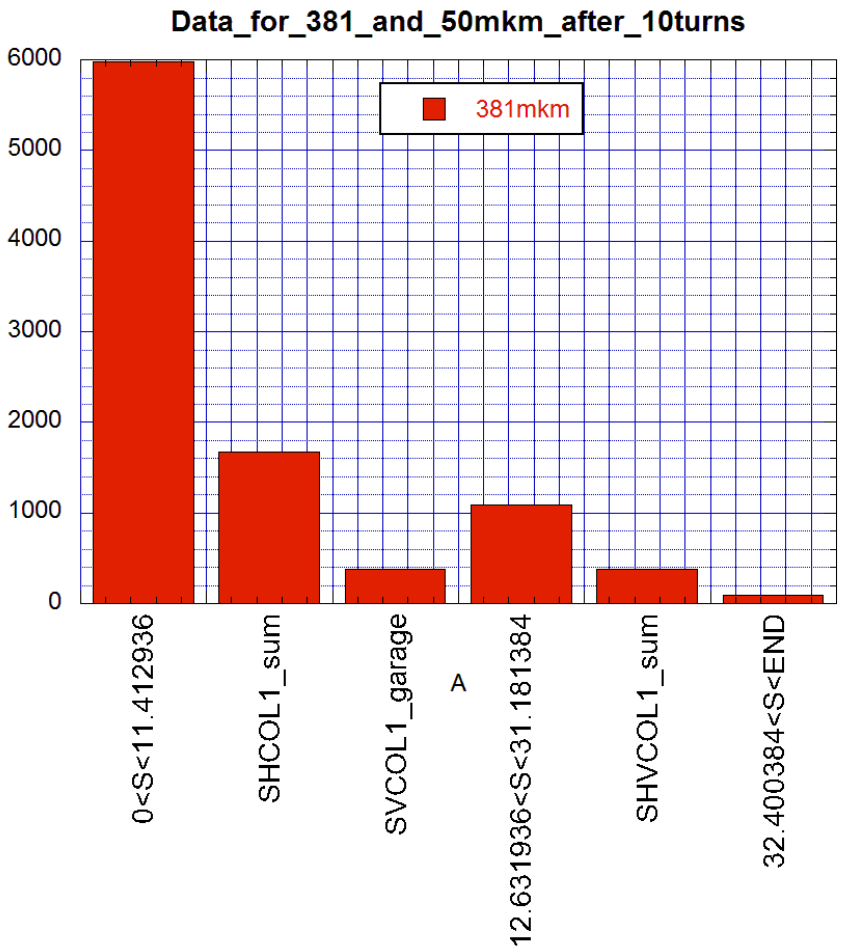

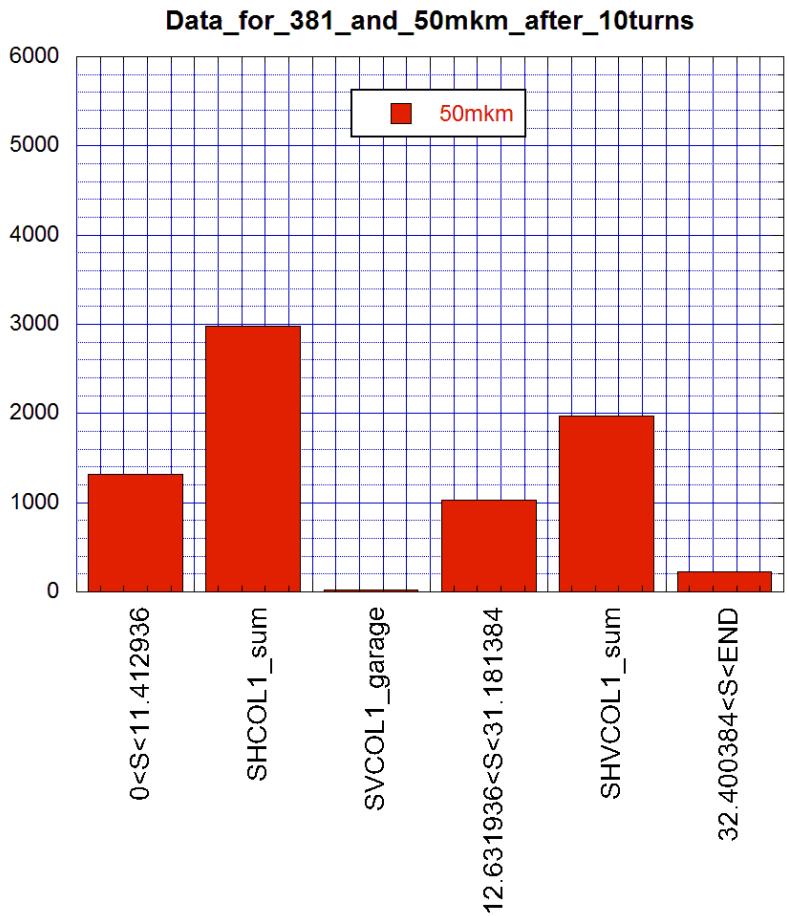

MADX: first results for horizontal collimators

During first turn only

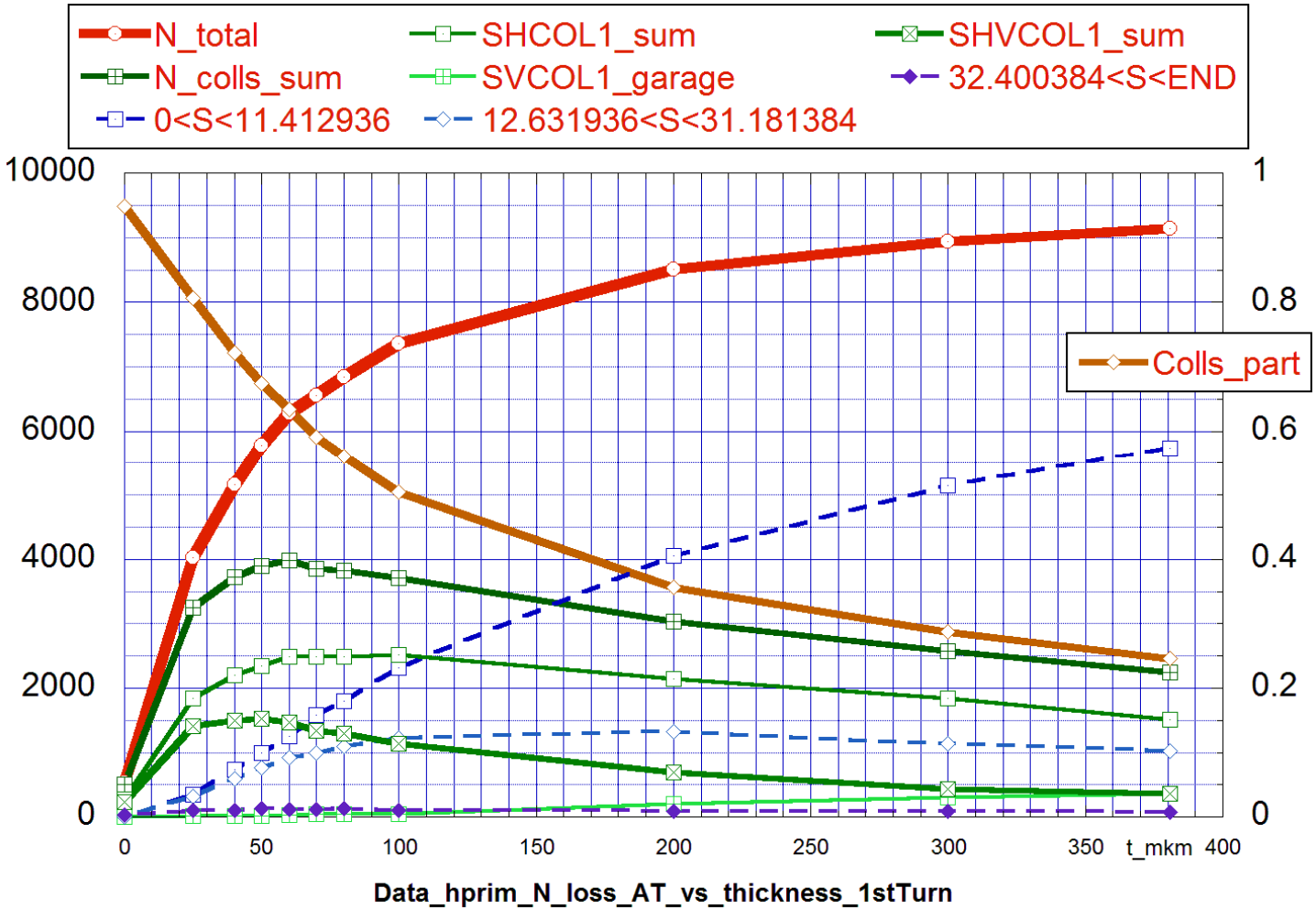

Maximum N_colls_sum at 60mkm (within 40-100mkm)

MADX: first results for horizontal collimators

After 10 turns

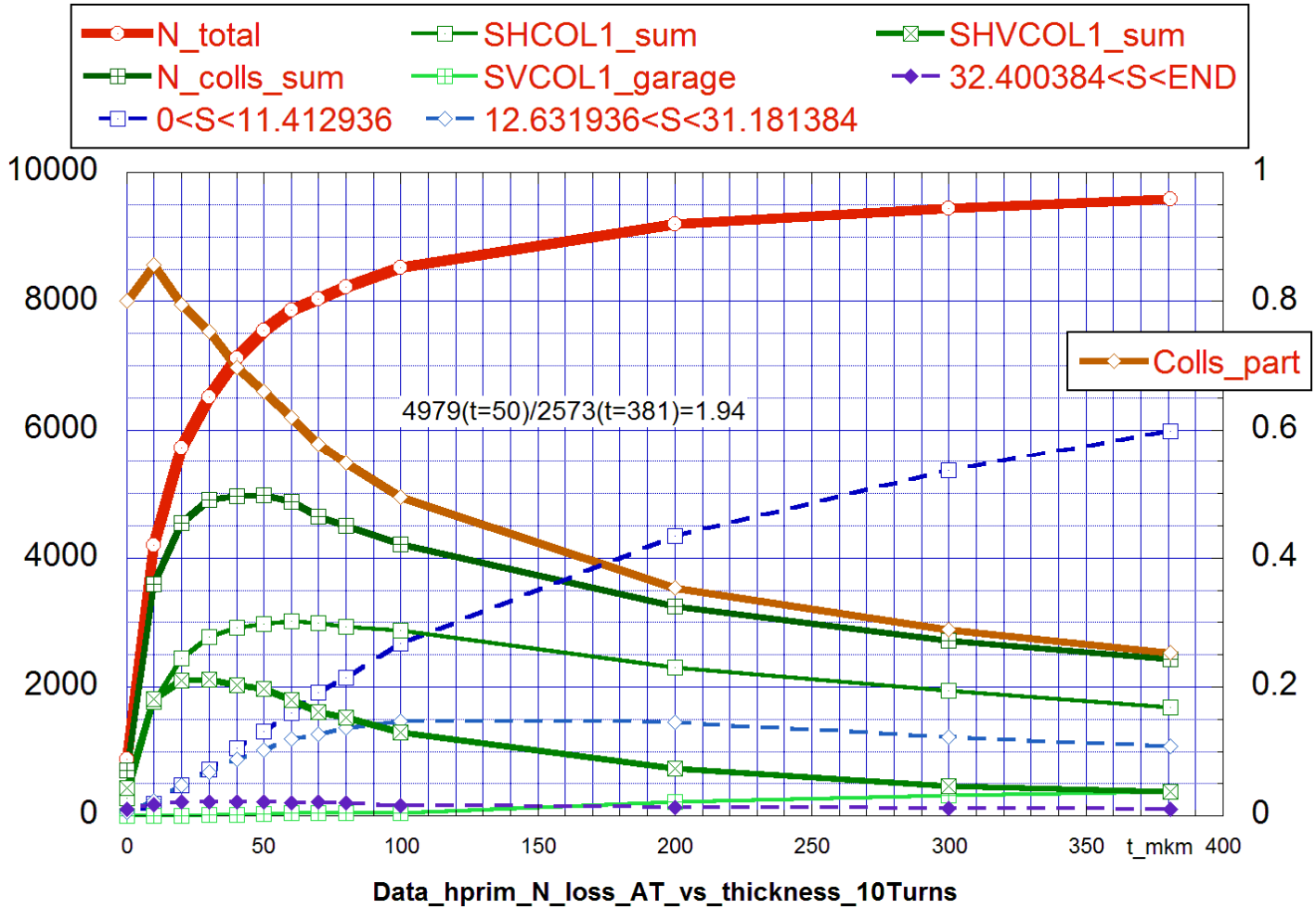

Maximum N_colls_sum at 50mkm (within 30-60mkm)

Conclusion

- MADX lattice for booster in collimation areas has been revised (info from reports, ruler meas. & drawings)
- Scattering module from STRUCT extracted, tested and included in MADX (thanks Striganiov & Mokhov)
- Trapezoidal apertures in MADX - implemented
- Generation of specific particle distributions - done
- First runs for Hor. Collimation - performed
- Oprtimal thickness of PrColl ~50 mkm (<< of existing 381mkm)
- Runs for vertical and additional post-processing routines should be performed within next weeks
- Results confirm a need for a discussion about replacement of primary collimators

Supporting info

B110 Application Page

T.Sullivan & D.Still BeamDocs 1220-v1 (2004)

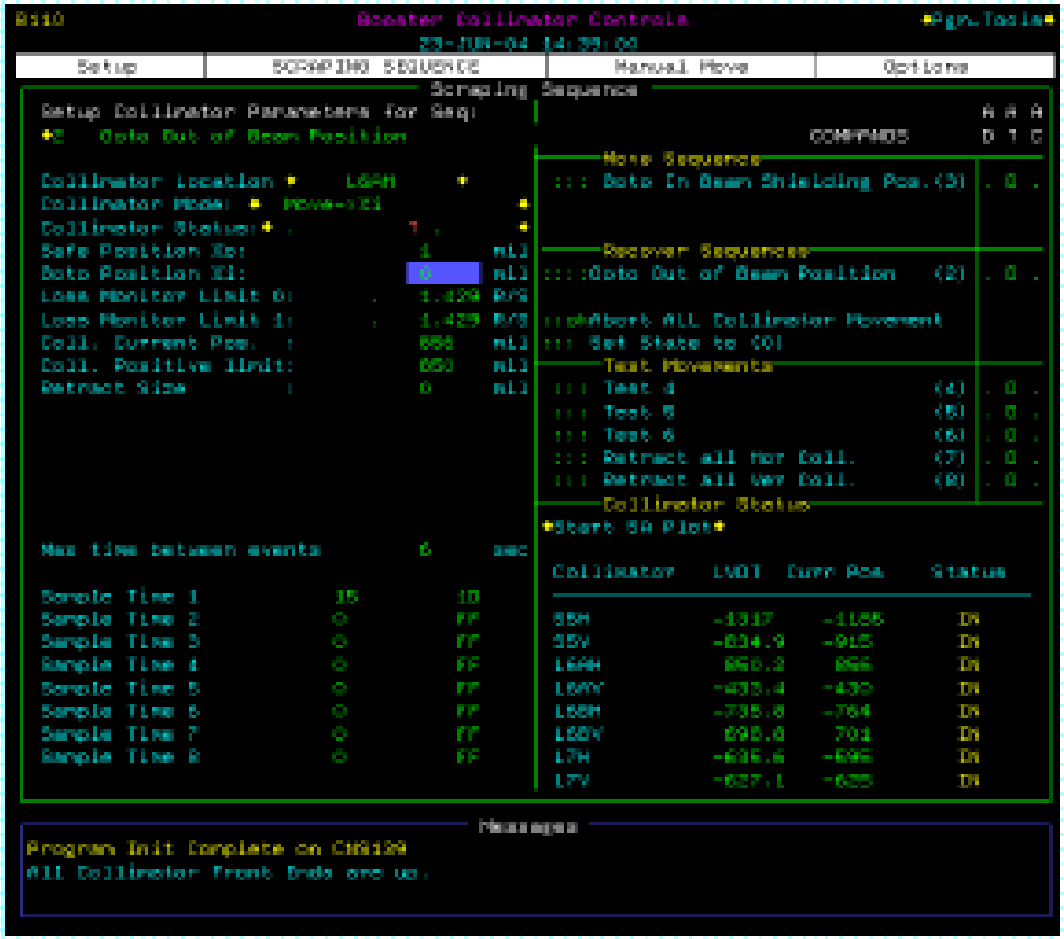

Effects of Collimators on Ring Losses

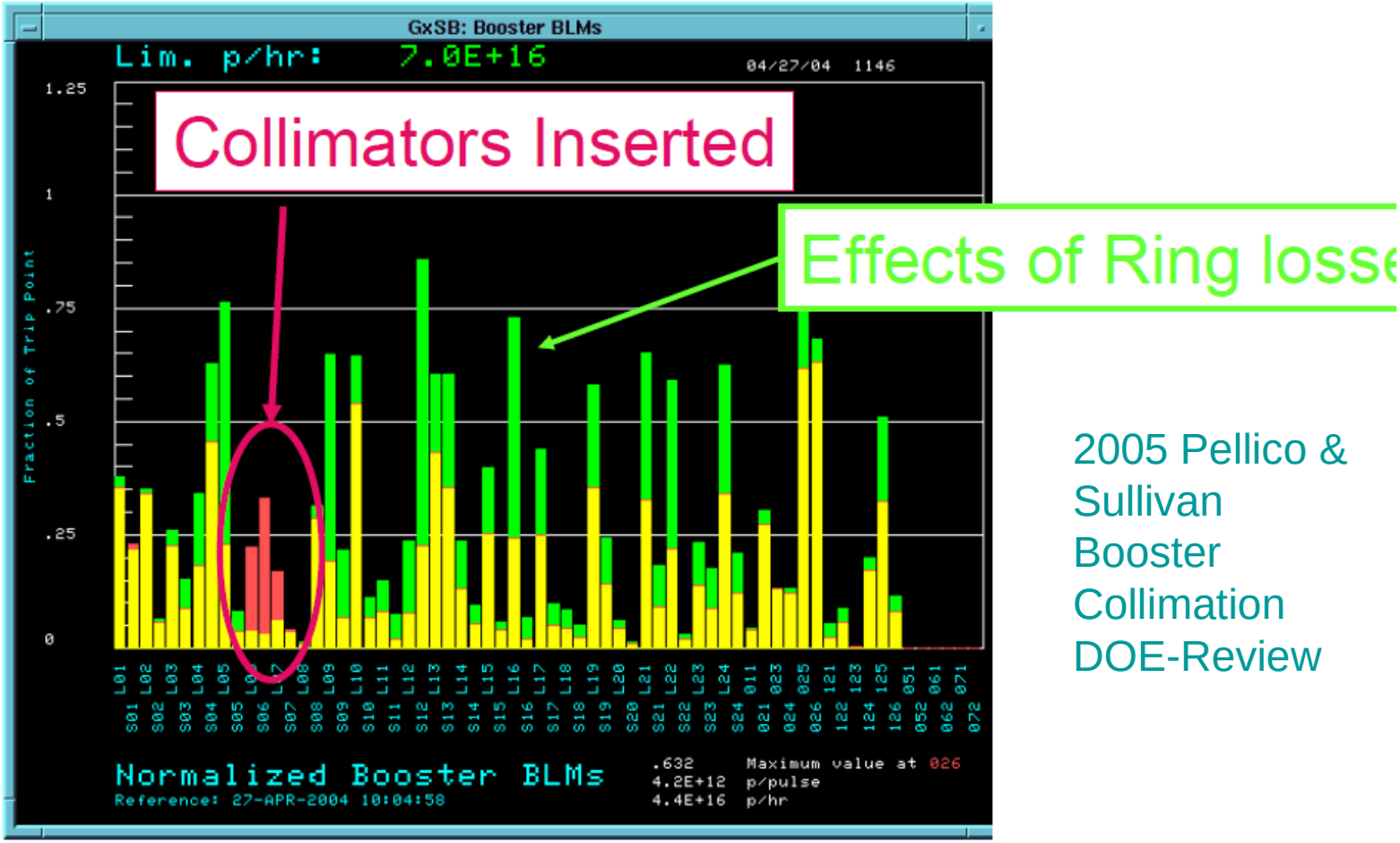

2005 Pellico & Sullivan Booster Collimation DOE-Review

Bartoszek Eng. (some info on web)

The Design of the Booster Collimators - Internet Explorer

http://www.bartoszekeng.com/boostershield/boosterc

Index of /boostershield | The Design of the Booster C...

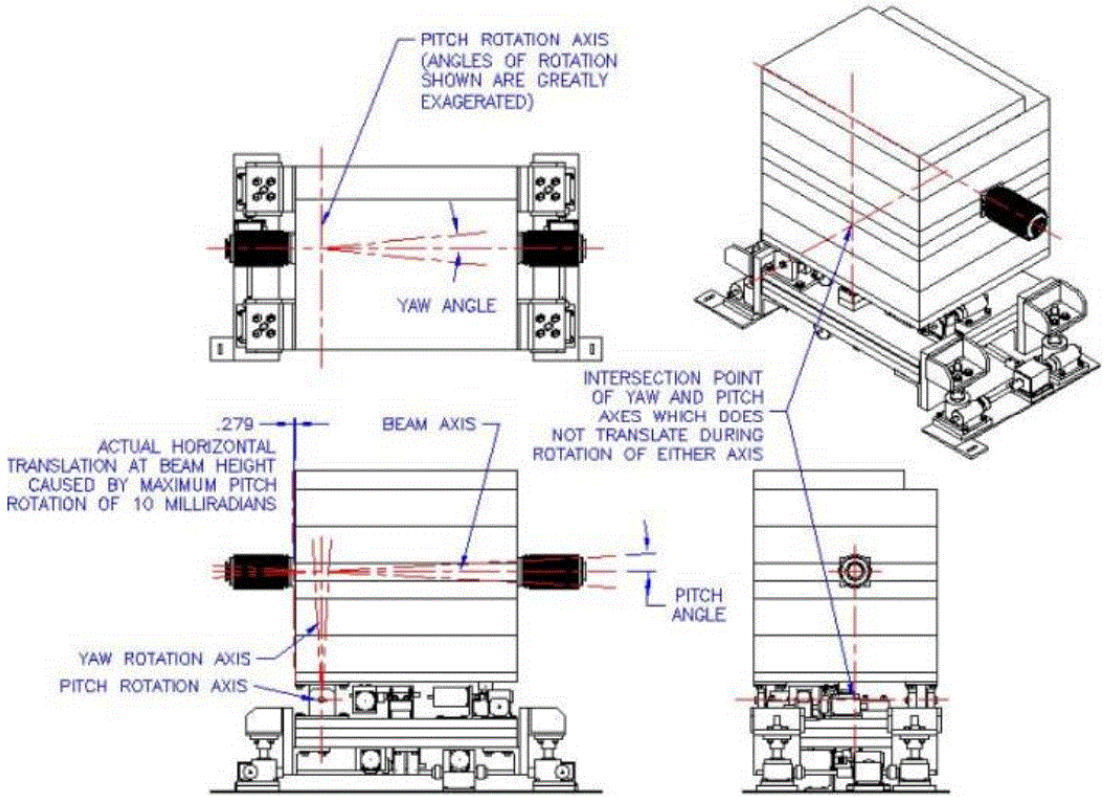

Outline | Notes | Slide 1 of 34