Fermilab

Managed by Fermi Research Alliance, LLC for the U.S. Department of Energy Office of Science

Thermal losses with the latest AI800 data.

Gennady Romanov

2nd Harmonic cavity Meeting

4/VI-2015

Latest data on Al800 garnet from Youri&Robyn.

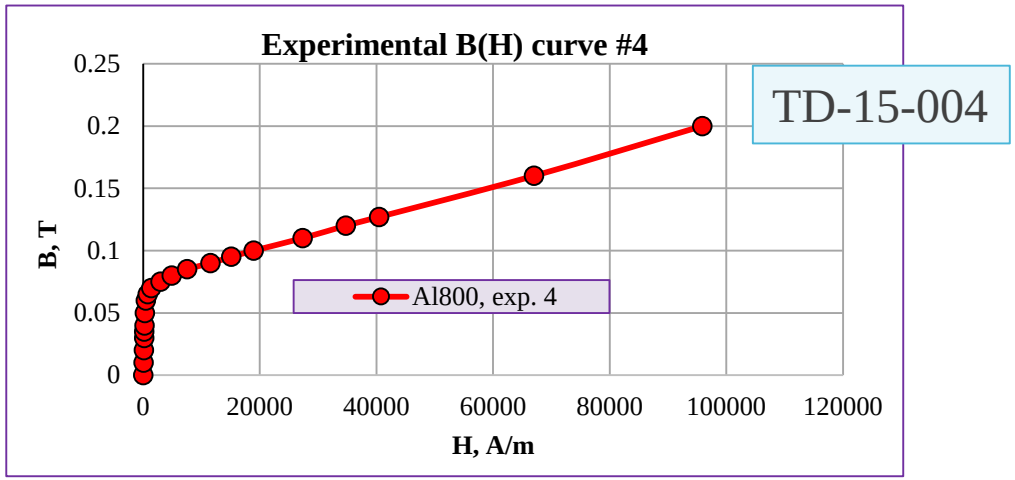

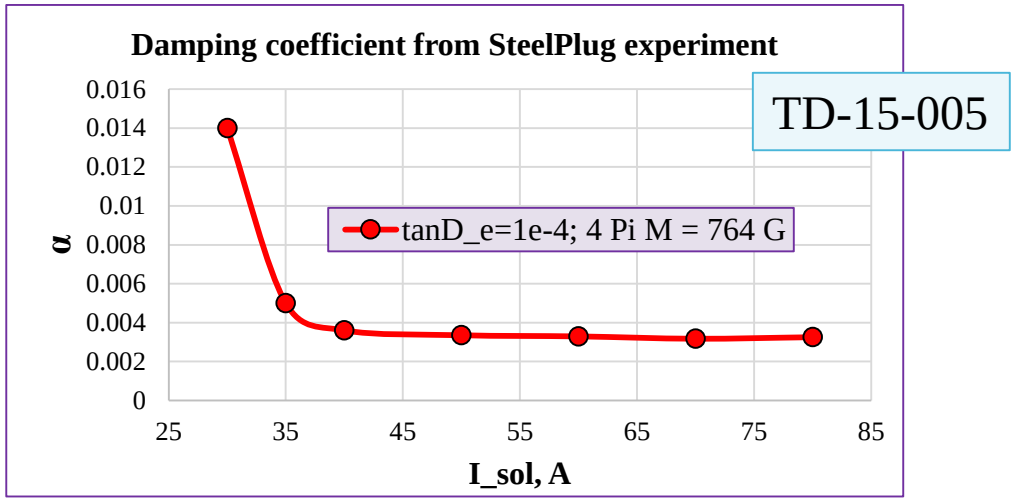

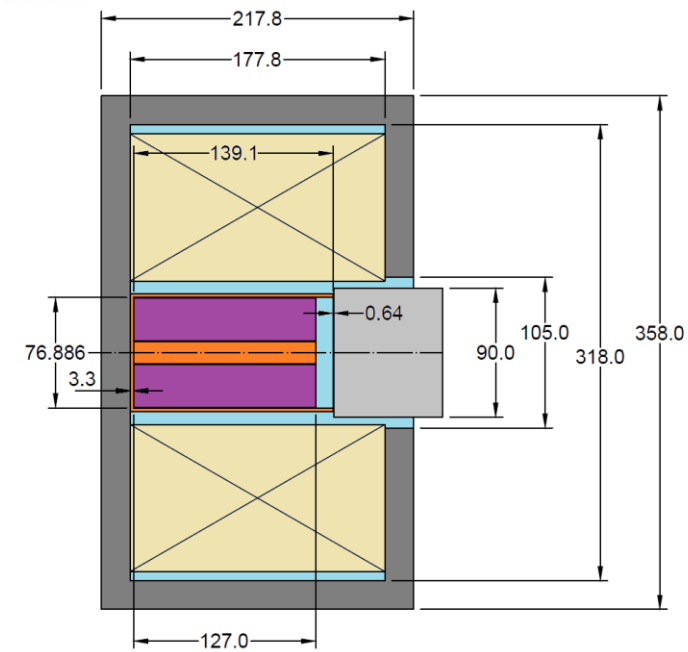

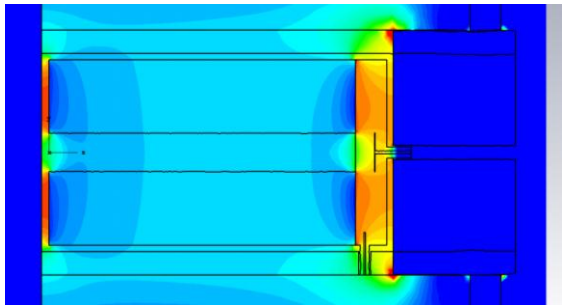

H field distribution in the set up at 40 A

H_{min}(35 A) = 7 kA/m; H_{min}(40 A) = 12.7 kA/m.
12.7 kA/m will be a target.

Partially closed gap

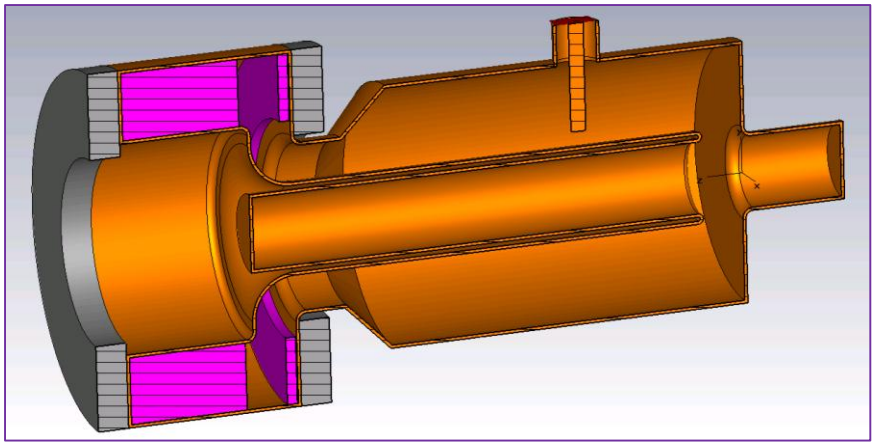

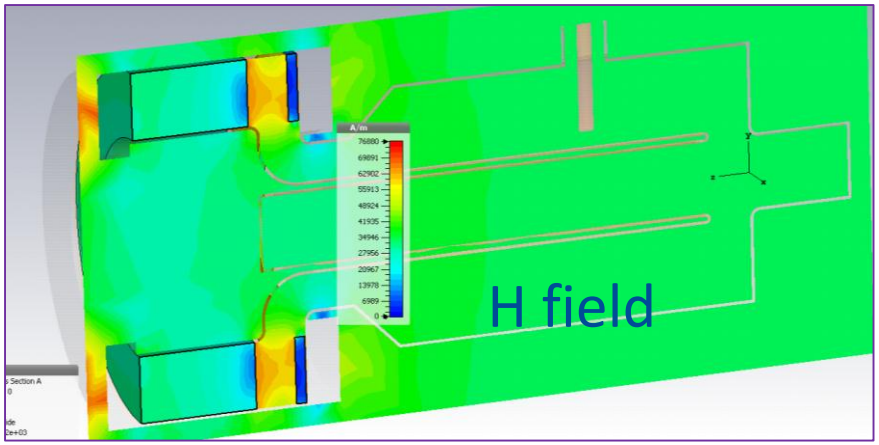

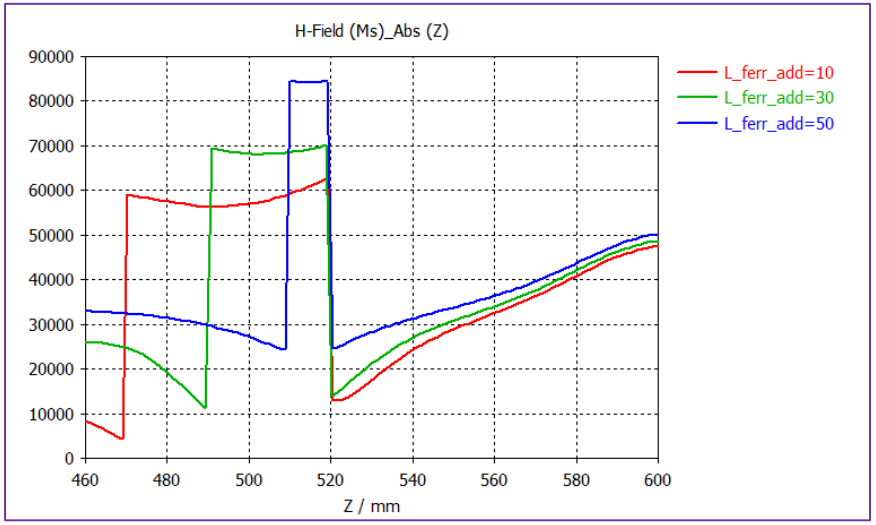

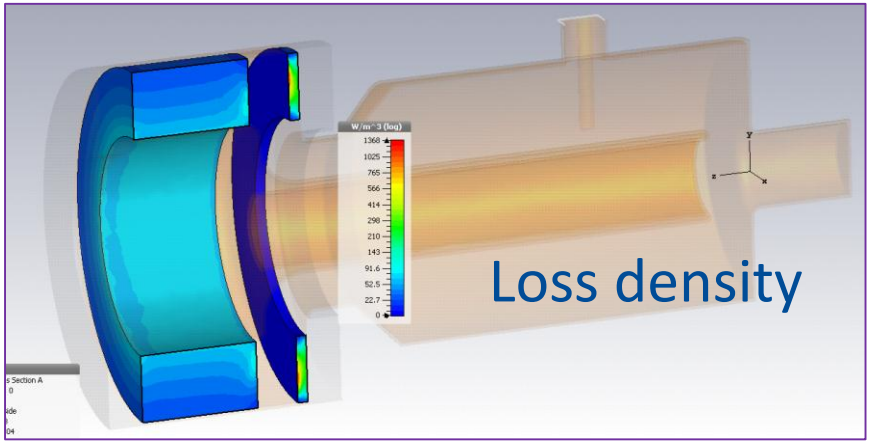

The partially closed gap is effective when it's practically closed.
Cooling of thick additional ferrite cylinder will be a problem.

Providing internal H_{min} >12 kA/m

Using higher starting bias field plus some moderate changes in the tuner dimensions internal H_{min} was increased from 8.2 kA/m to 12.5 kA/m (103 Oe to 157 Oe, resonance is at 27 Oe for 76 MHz).
Loss density in the hot spot decreased by factor of 9.

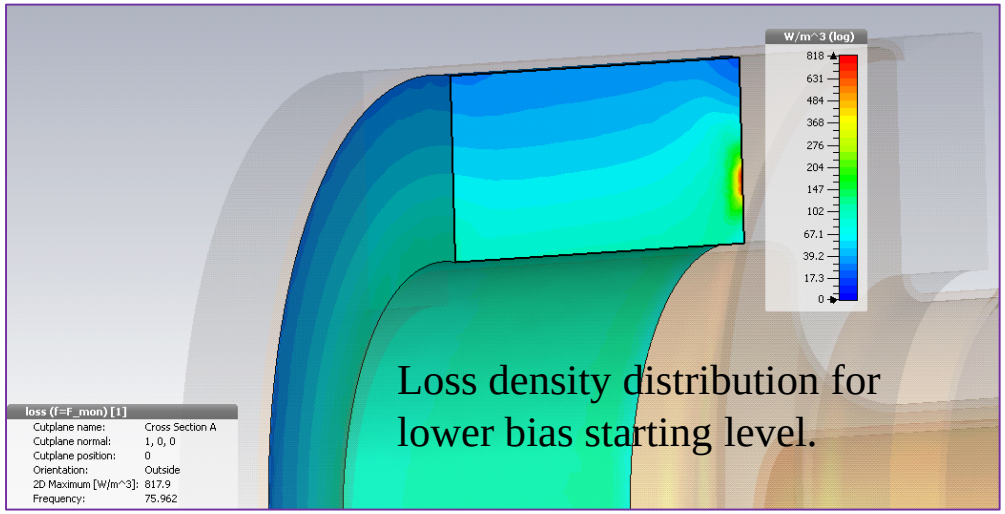

Loss density distribution for lower bias starting level.

The plots look similar, but the upper plot is in log scale.

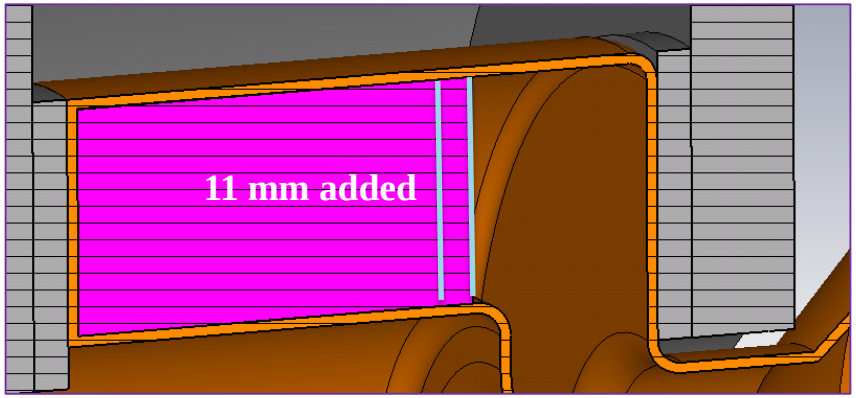

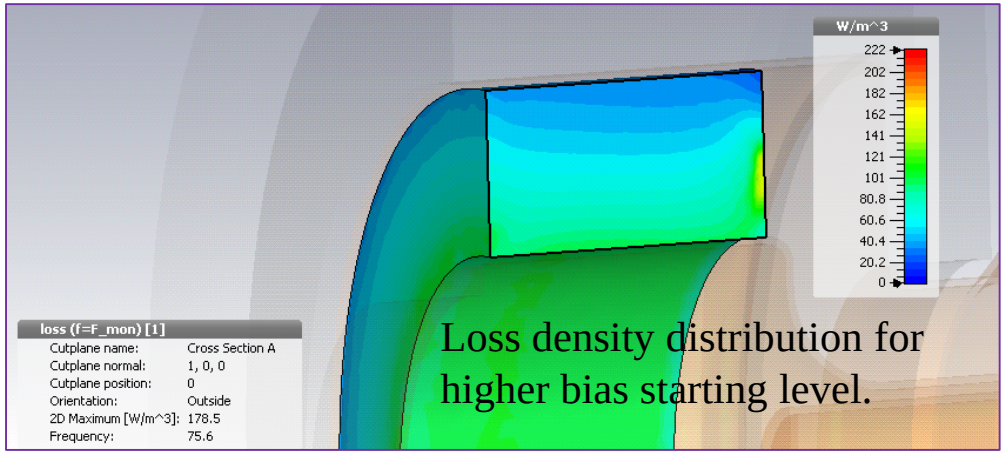

Loss density distribution for higher bias starting level.

Thermal losses

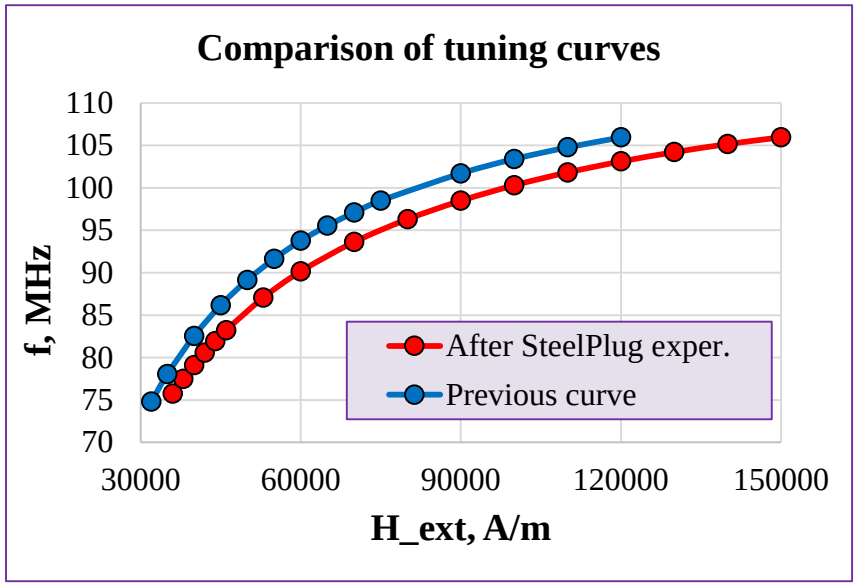

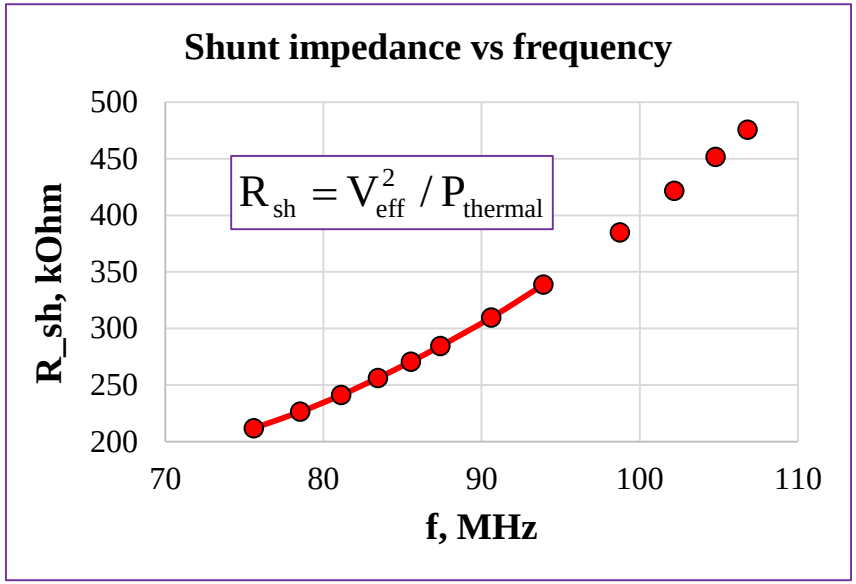

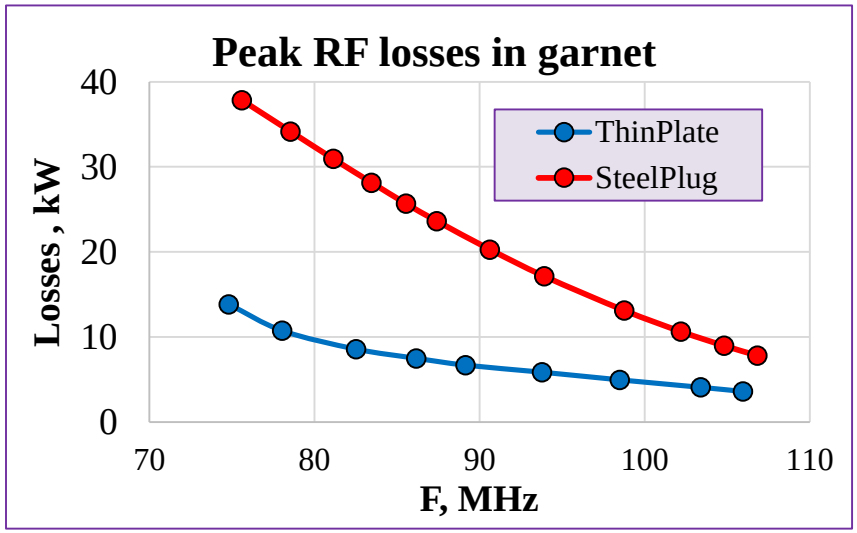

Thermal losses and average max loss density in the garnet		
Garnet parameters	P_losses, kW	Loss density, W/cm^3
ThinPlate (aver. mu)	1	0.8
SteelPlug (2D, Iouri)	3.2	1.13

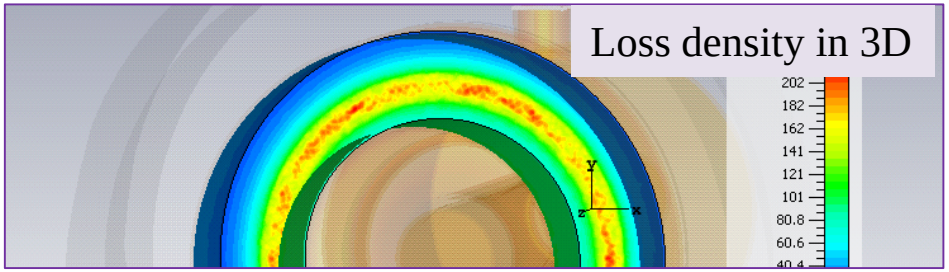

Thermal losses. Omega3P simulations with constant μ´´.

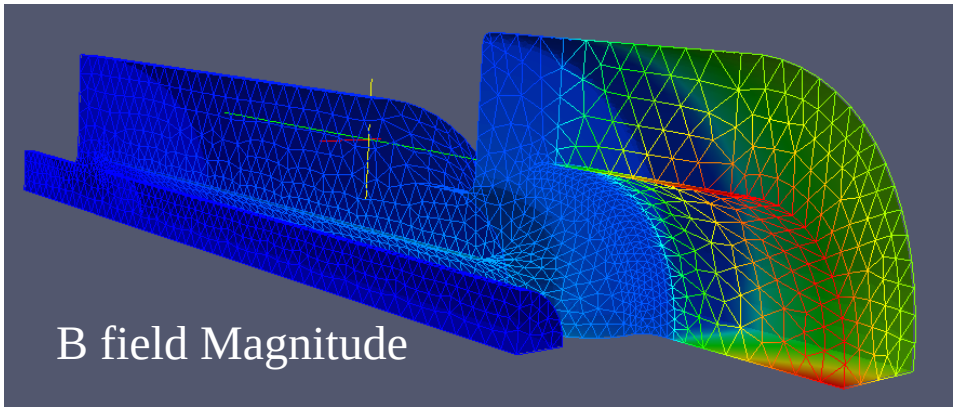

Gennady's results from "May212015_2nd_Harm"

Garnet with fixed parameters μ´=3.5, $\tan\delta_e = 0.0001$ and $\tan\delta_m = 0.000467$. Equivalent to transmission model

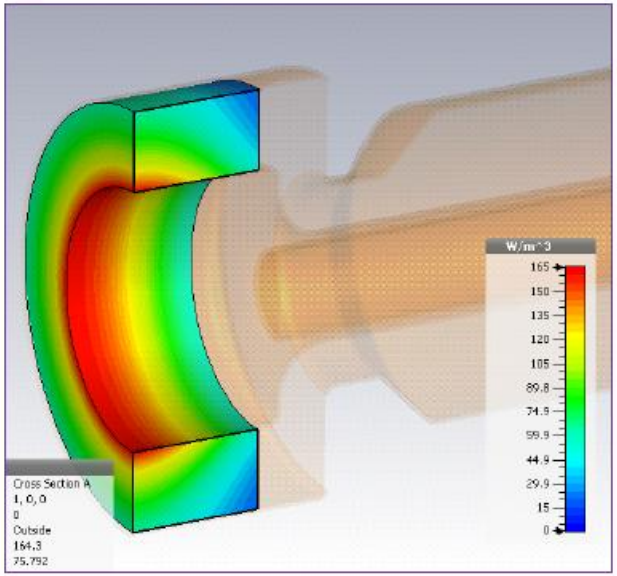

F = 75.792 MHz
$P_{ferrite}$ = 67 kW
P_{copper} = 9 kW
P_{total} = 78 kW

Tianhuan's results:

F = 75.503 MHz
For V_peak = 100 KV:
P_ferrite_e = 8.11 kW
P_ferrite_m = 63.25 kW
P_ferrite = 71.36 kW
P_copper = 9.14 kW
P_total = 80.5 kW