Fermilab

Managed by Fermi Research Alliance, LLC for the U.S. Department of Energy Office of Science

On coupler design - 3

Gennady Romanov

2nd Harmonic cavity Meeting

24/IX-2015

Final tweaks

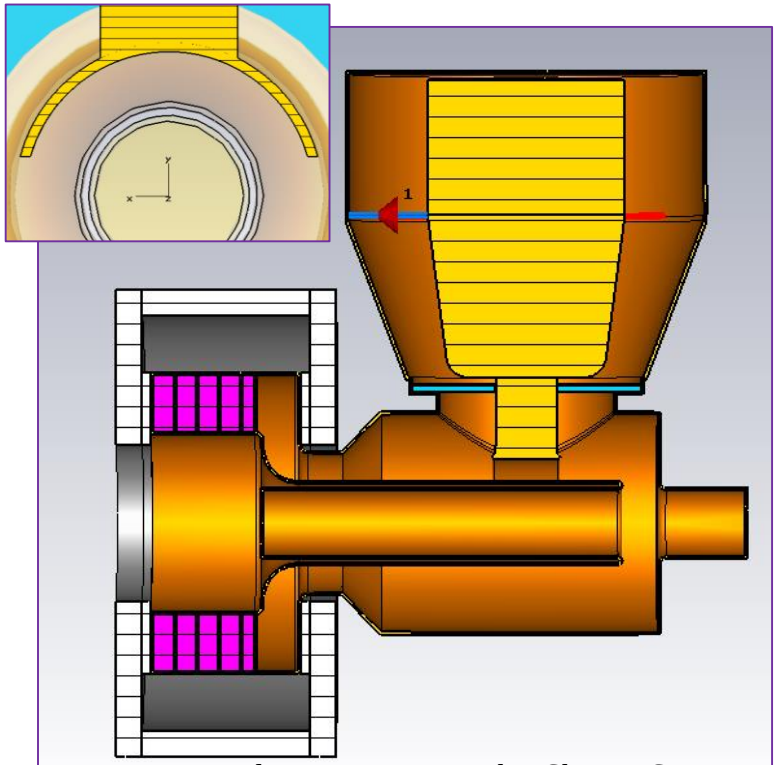

2ndHarm_EM_TanTube_Short, TS5

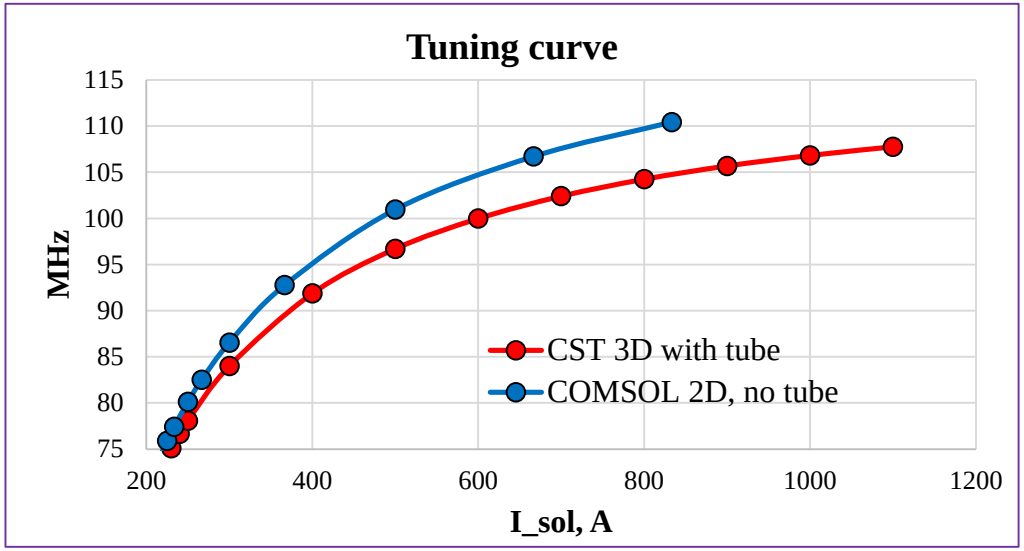

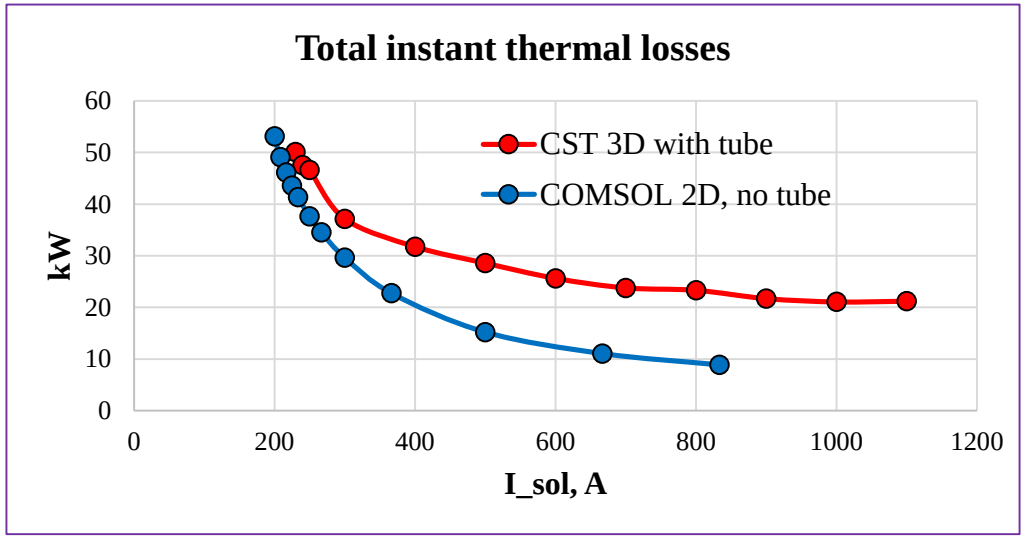

- Port_R= 185/2->200/2
- Aperture 3”
- L_coax = 500->450 mm
- L_ferr = 95->115 mm
- Al_2O_3 – 3 mm thickness
- Al800 – variable thickness
- Cone shape of the tube shell
- Capacitance < ½ of full circle

Thermal analyses

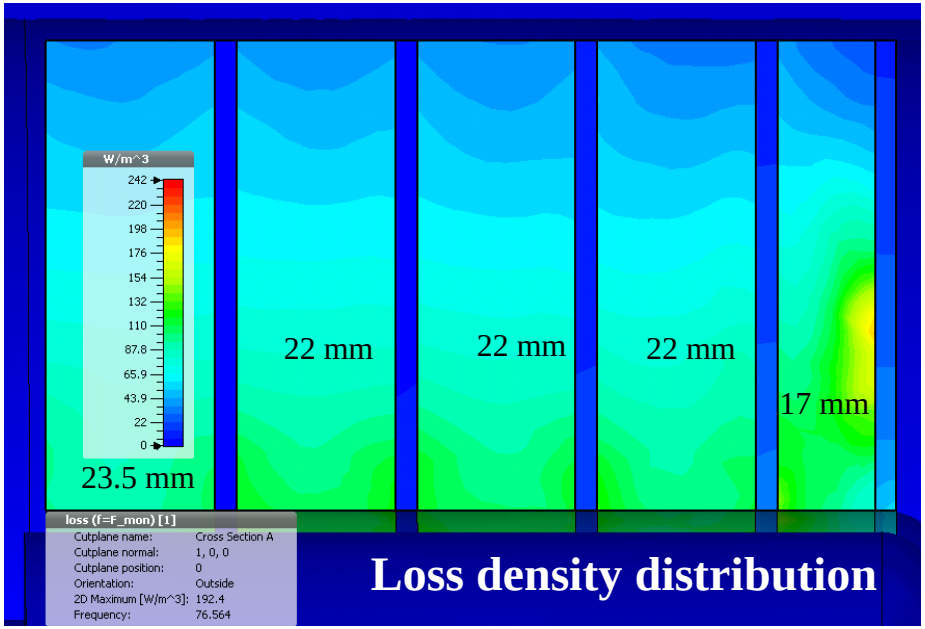

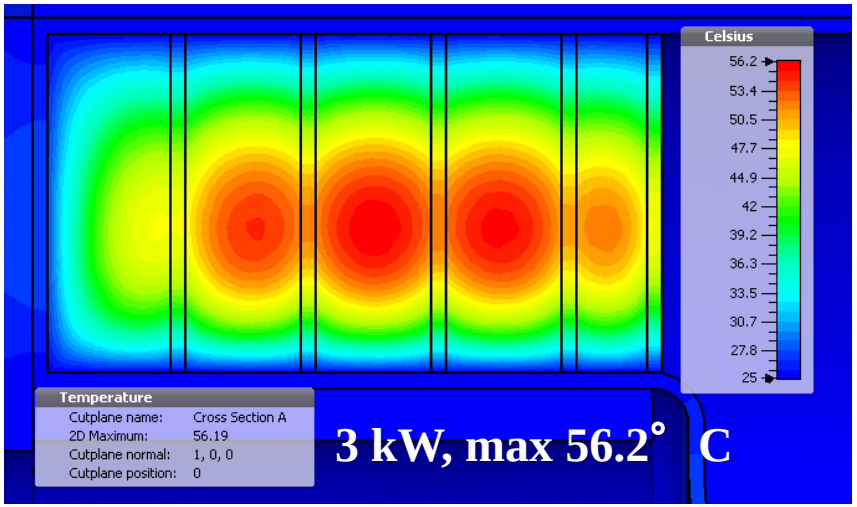

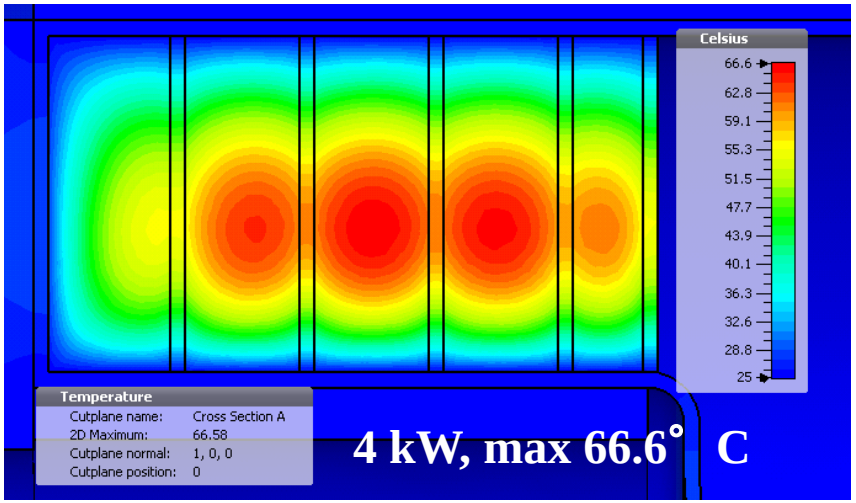

The thermal losses averaged over cycle vary from 3 to 4 kW, depending on soft used, model modifications, mesh density, material properties etc

Transmission line model -> CST

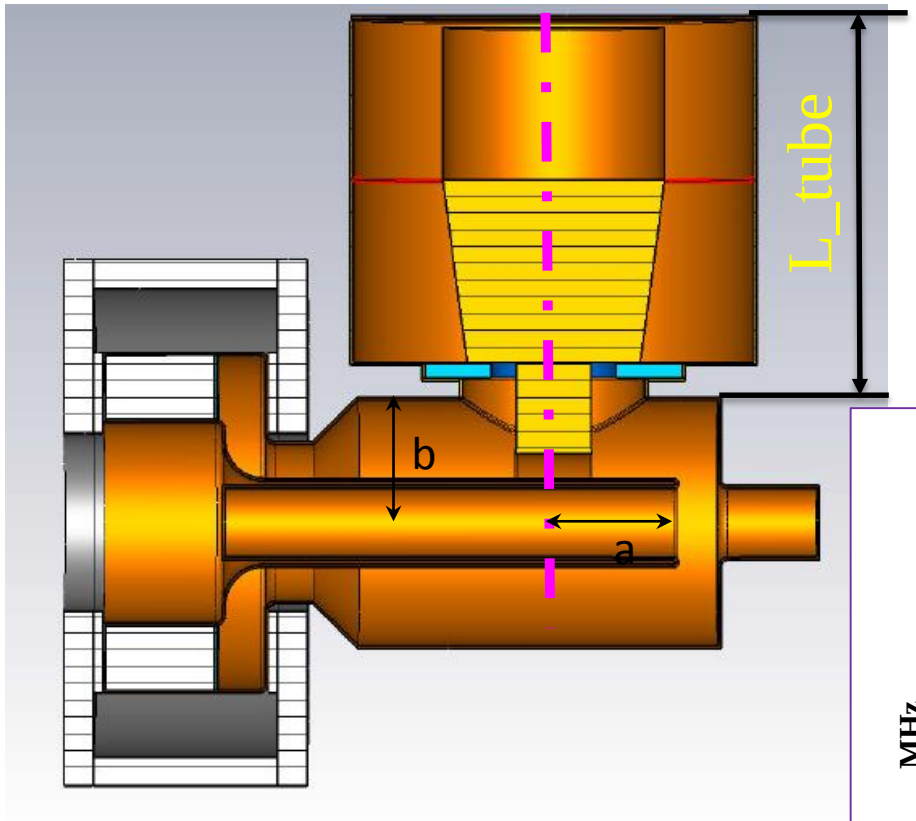

I assumed:

- L_tube is constant
- Coupling capacitor is ½ of full circle

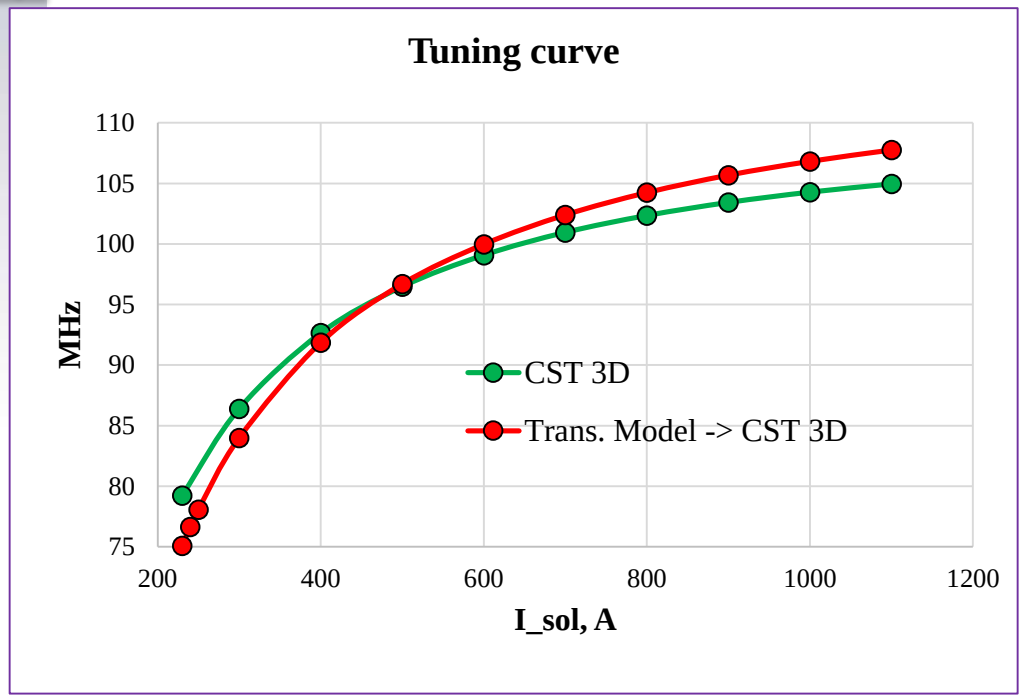

a: 127 mm -> 107
b: 125- > 100
Length of ferrite -> 105 mm
Coupling capacitor goes from 10 pF -> 7.5 pF in trans line model