PIP Meeting: 2nd Harmonic cavity Update

C.Y. Tan

13 Jan 2016

Latest design

Design as of 08 Oct 2015

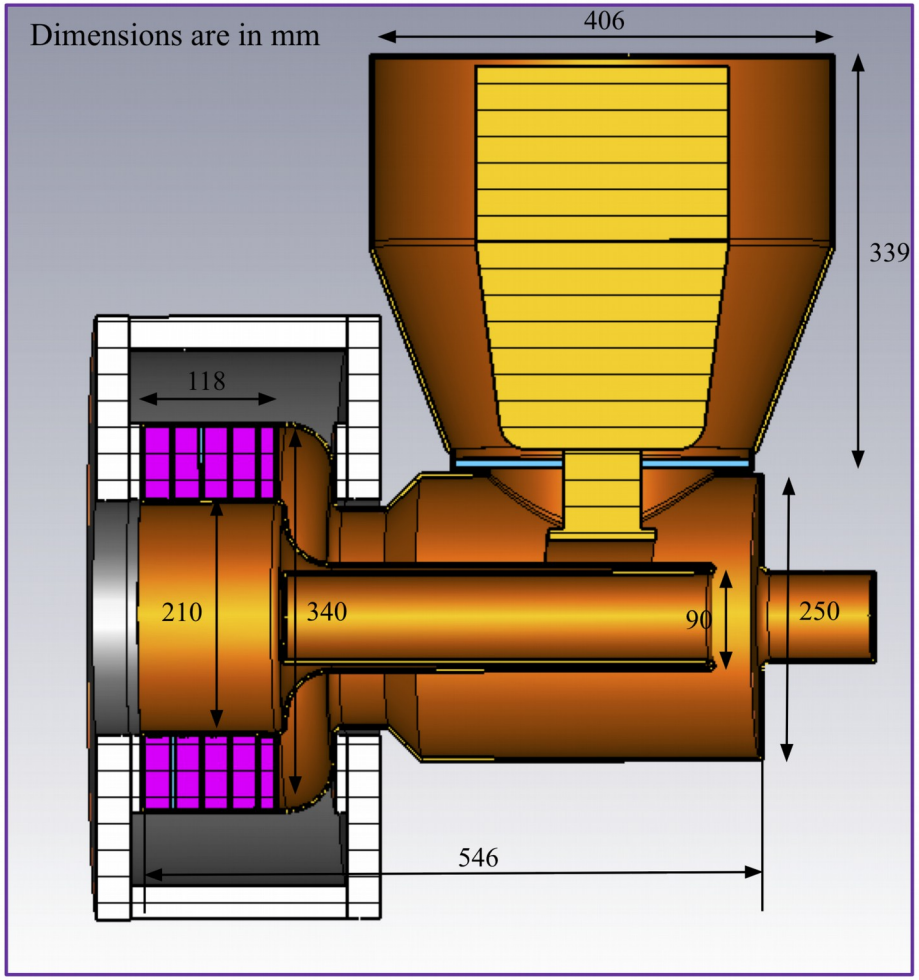

- Power module is modified from Booster power module.
  - Uses same tube as Y567.

- Beam pipe ID is 3”
- Frequency range: 76 – 106 MHz (Δf = 30 MHz)

Not shown:
- RF windows
- HOM damper cavity
- Final solenoid design.

Thickness of garnets are being optimized

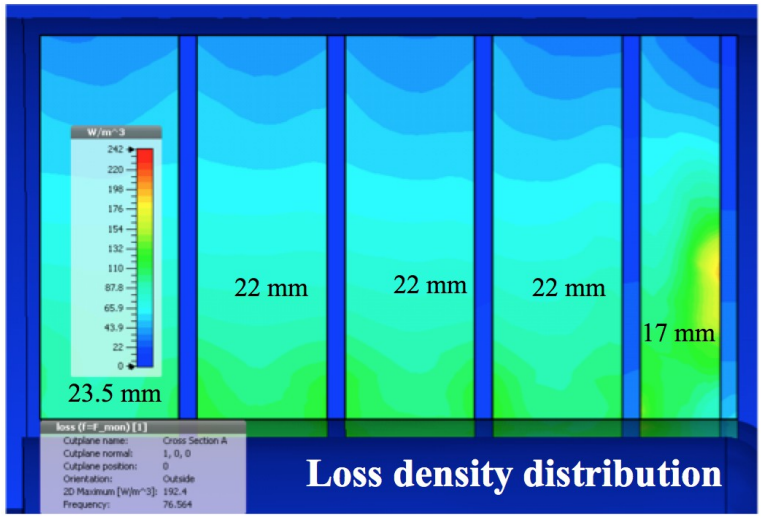

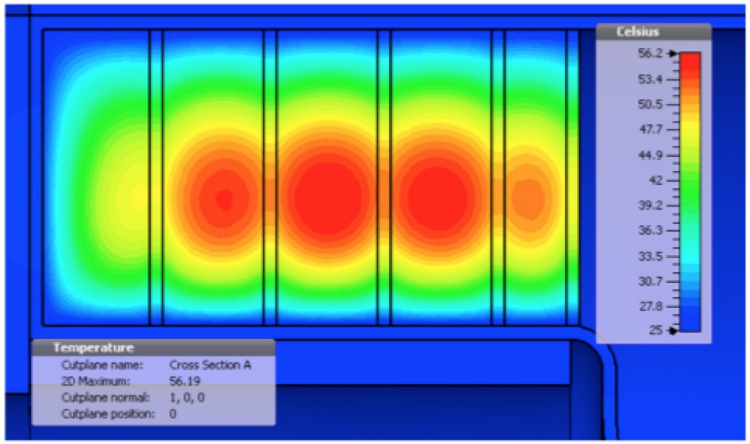

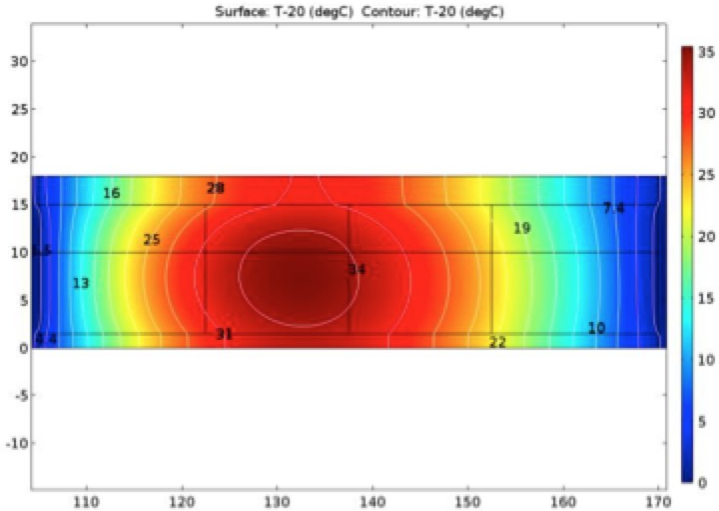

Using our special ramp and time averaging, the maximum temperature rise in the top most garnet/alumina sandwich is 35 degC

Goal: To get to a final size soon so that garnets can be ordered

Mock cavity to check simulations

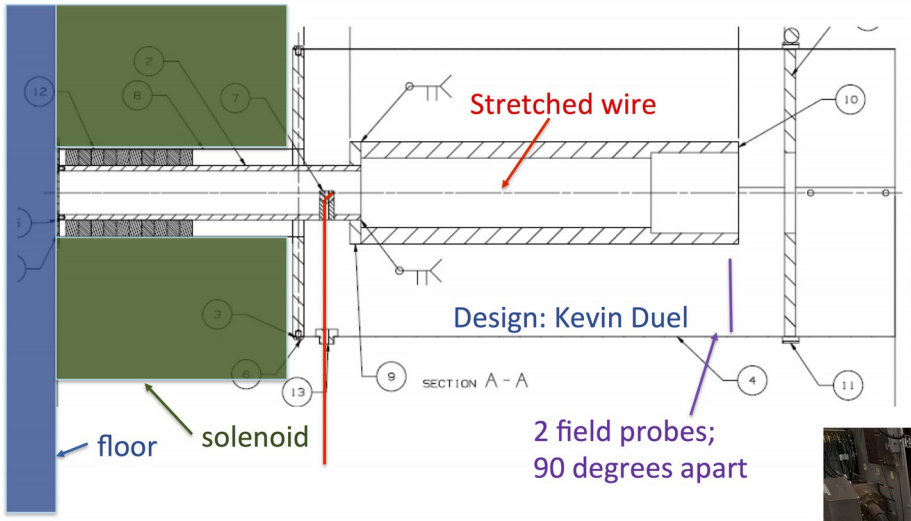

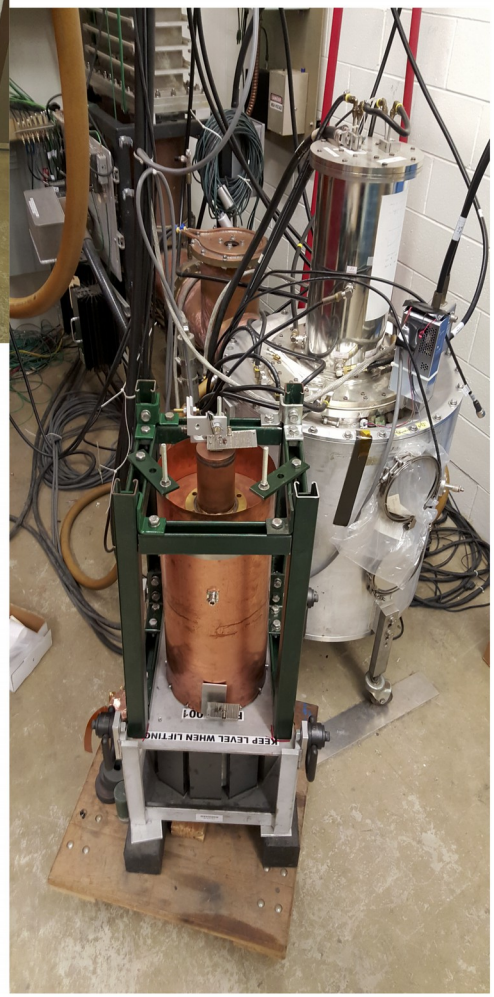

Measure shunt impedance and Q and HOM.
Use the results to check CST simulations. This is to close the loop between sims and measurements. We need assurances that the simulations are correct!

Future: test HOM dampers.

First CST results

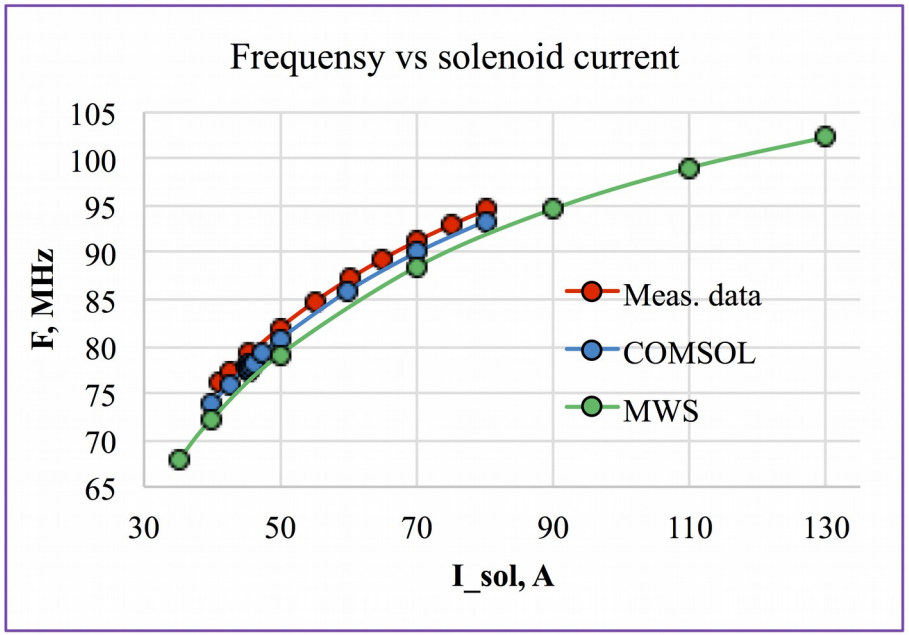

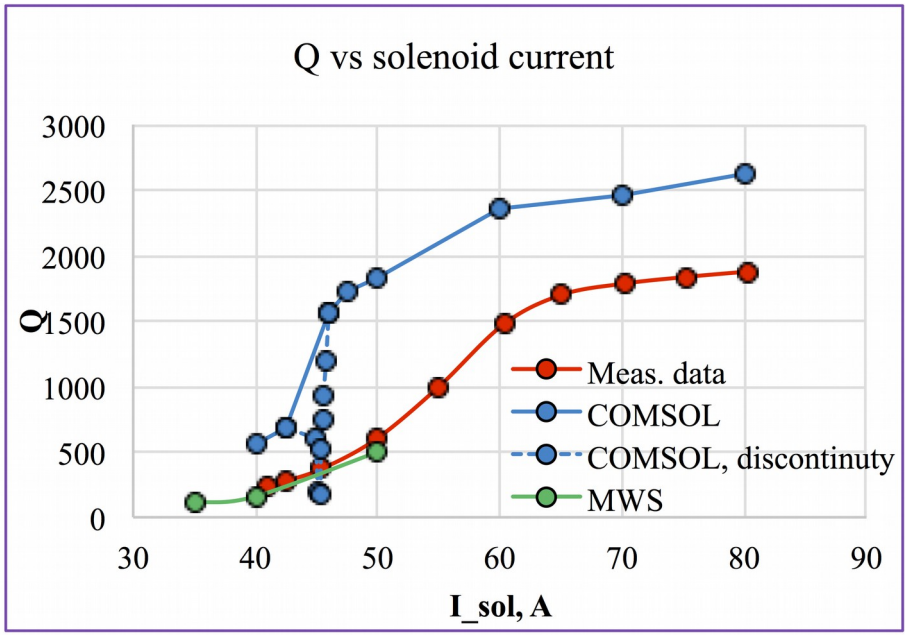

COMSOL: α=0.0035; ε = 13.8; $\tan\delta_E$ = 0.0001

MWS: α=0.0036; ε = 14; $\tan\delta_E$ = 0.0001
F = 132 MHz for empty cavity
F = 123 MHz for ε=14 and μ=1 (Eigenmode, no losses, uniformity)

CST and COMSOL matches measured resonance well. CST low frequency Q also matches.
High frequency not matching due to bad joints in copper cavity. This will be fixed.
COMSOL does not match Q at all. (Will know in next 2nd harmonic meeting the reason)

Windows are being optimized

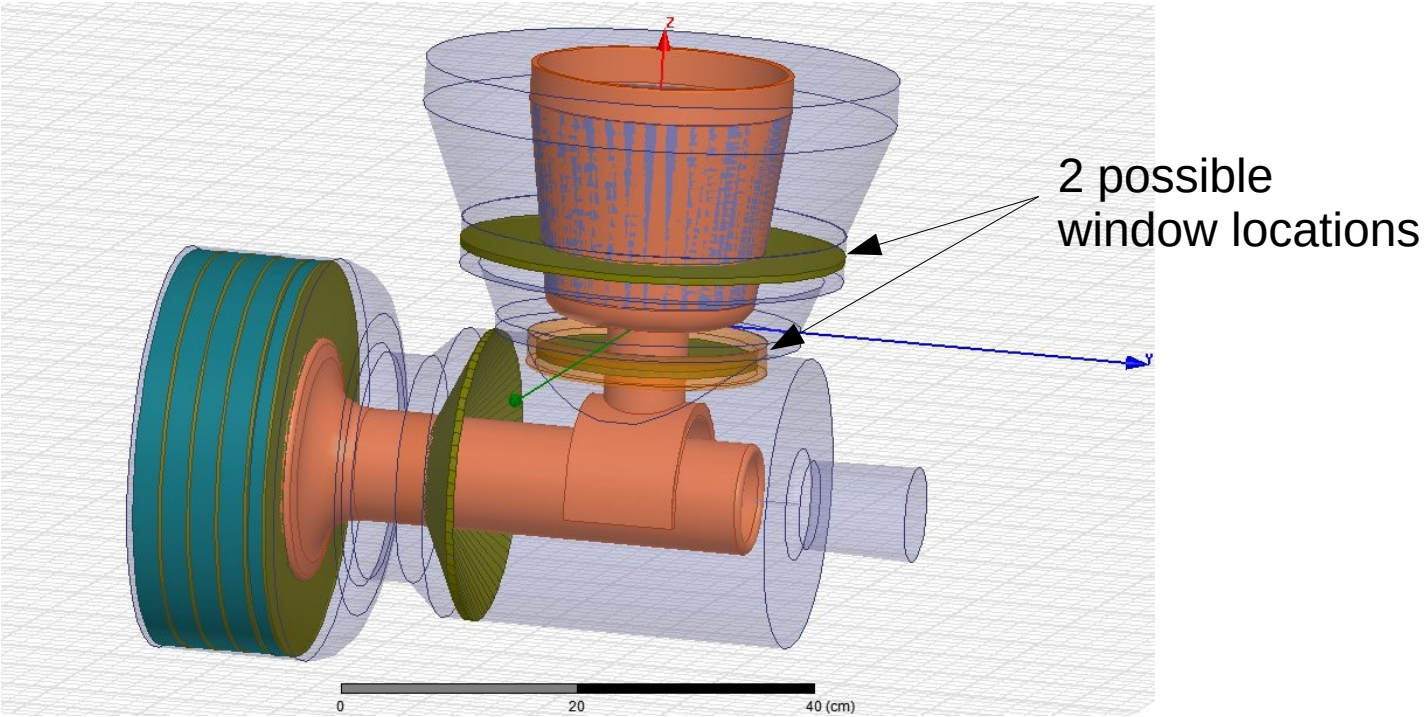

Simulations show that the length of the power coupler is critical because of strong coupling to the accelerating cavity.
We have to minimize any length changes.
This limits the possible locations for the windows.
The two location choices for the windows in the power coupler are doable. Vendor is being consulted at this point.

PA test

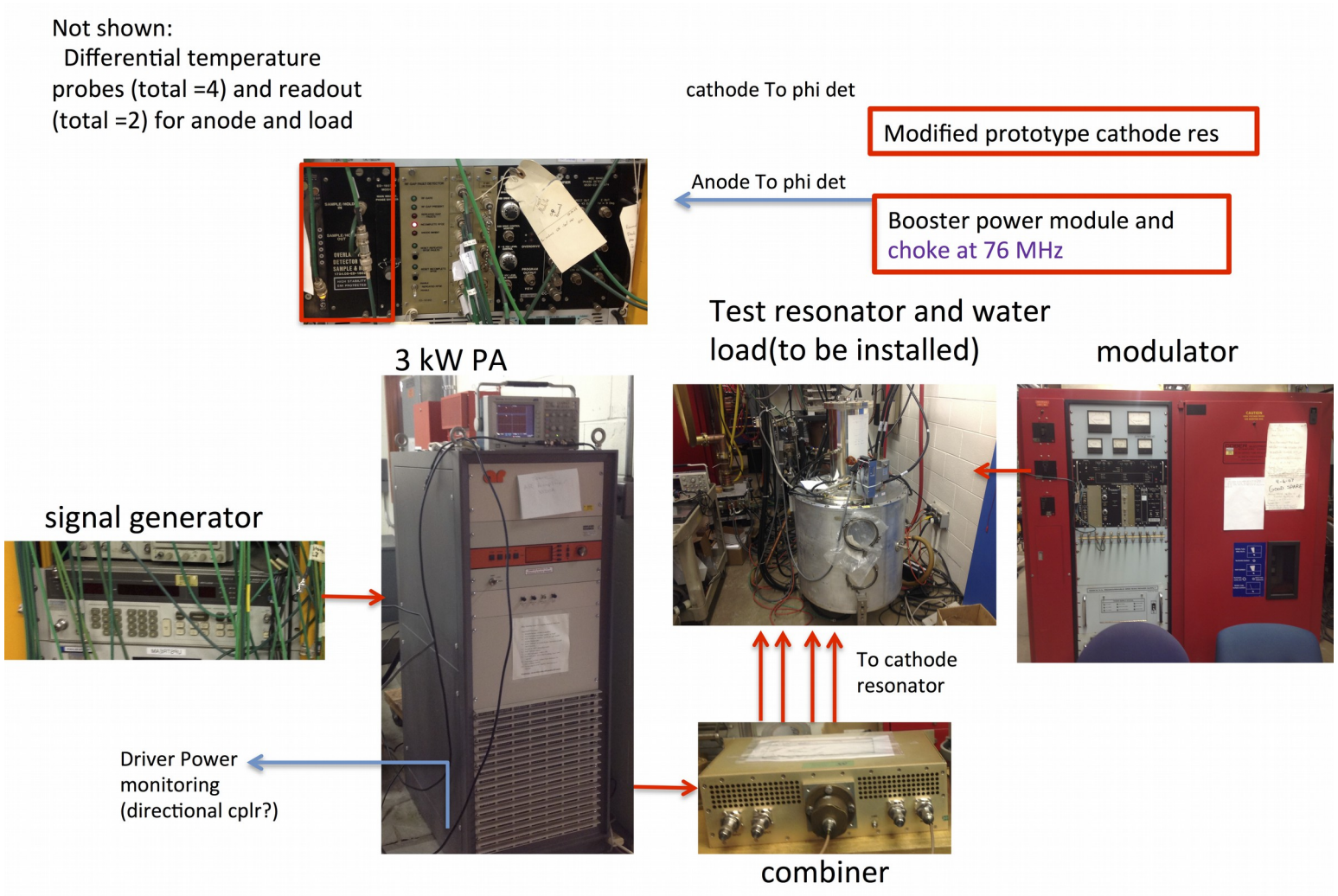

Test resonator is basically complete at the machine shop. Will be sent out for plating. Hopefully done by end of the month. Testing to start in February ...

Anode resonator (PA test)

Anode resonator is nearly done!

Some cooling tubes need to be welded. Aluminum part needs to be plated.

Cathode resonator has to be modified and cut (class I). To be completed soon.

If there are no delays, looking at testing in February.

Large garnet test stand

Test area is at MS7.
Magnet is still there (1.6 T field), which is plenty for what we need.
PS is still there.

Water, electricals must be checked before power up.

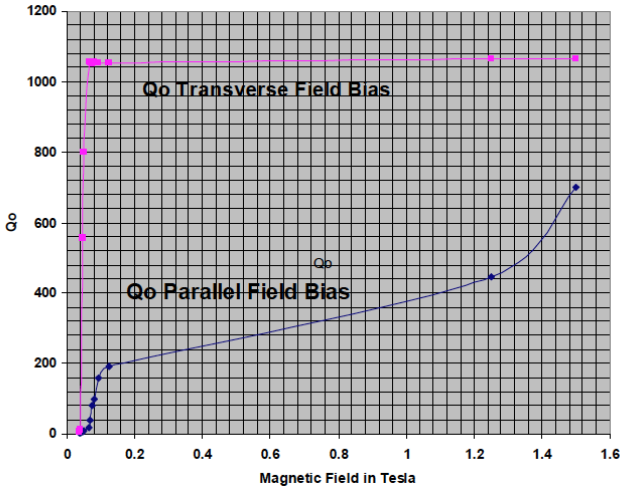

Large garnet test cavity

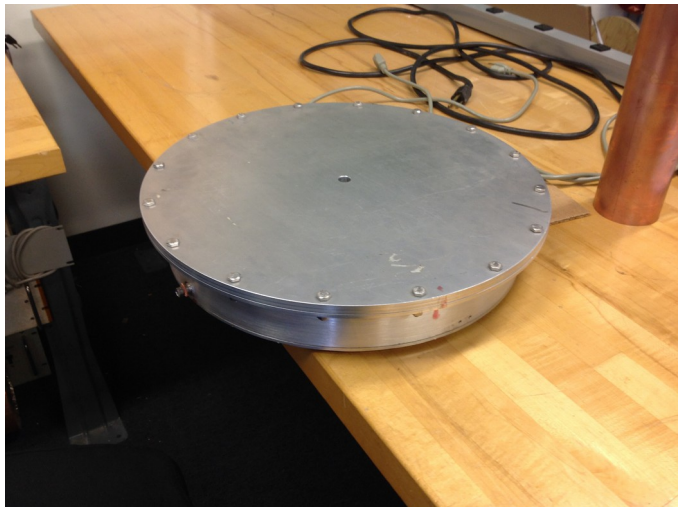

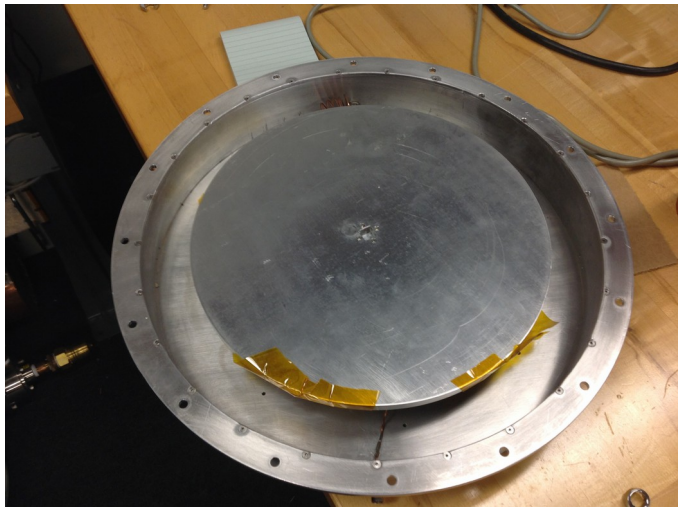

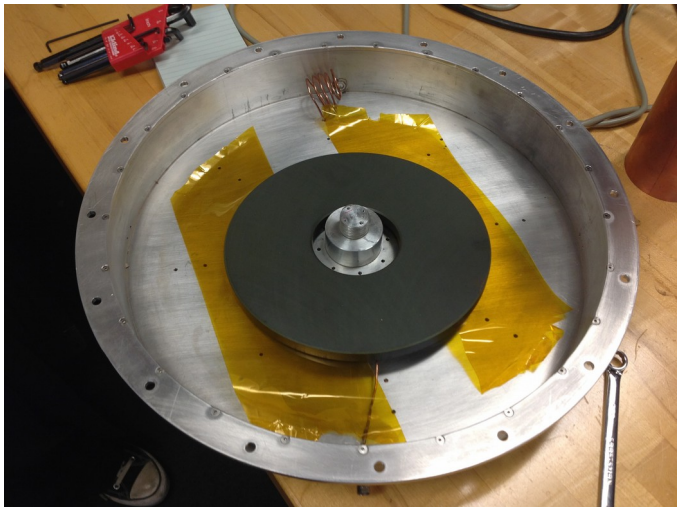

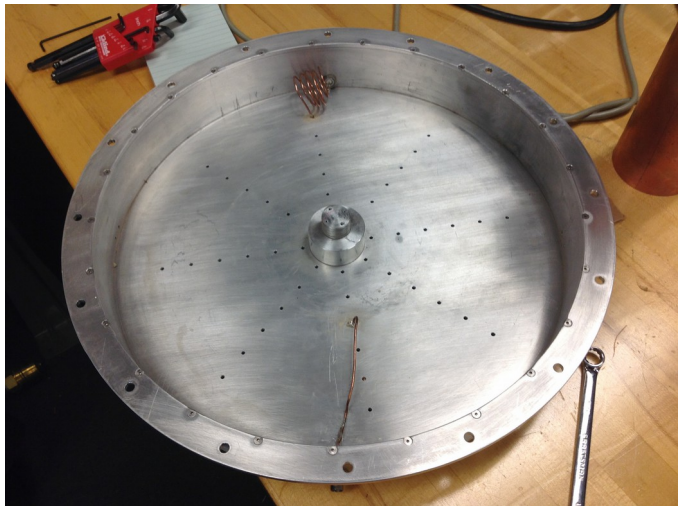

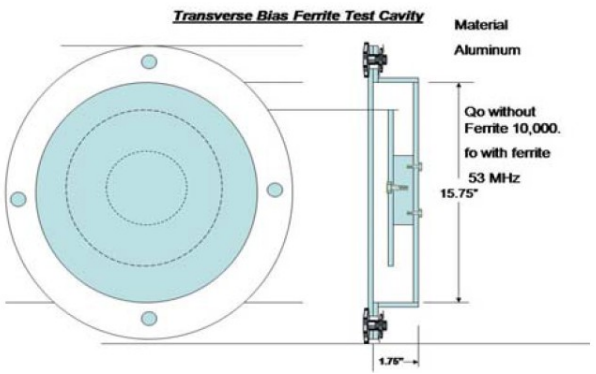

Garnet diameter: 340 mm = 13.4 inches < 15.75 inches, so we can fit in one garnet ring.

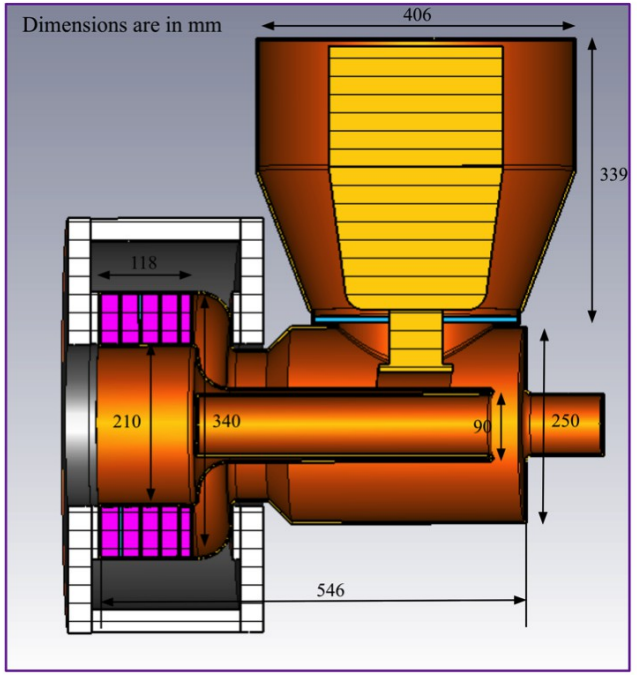

Plans and conclusion

- Tests that are happening early this year.
  - PA test (Feb)
  - Mock cavity test with HOM cavity (March?)
- Getting garnet dimensions finalized for ordering (Jan)
  - Garnet test stand needs some work but should be minimal
    - Have new Master's student, John Kuharik, to help with this work.
- RF windows design to be finalized.
- HOM cavity design started and to be finalized.
- Solenoid design has started and to be finalized.
- Mechanical design has started.
  - Eddy currents to be taken into account.