Fermilab

Managed by Fermi Research Alliance, LLC for the U.S. Department of Energy Office of Science

Further cavity tweaking

Gennady Romanov

2nd Harmonic cavity meeting

June 16, 2016

Mechanical changes

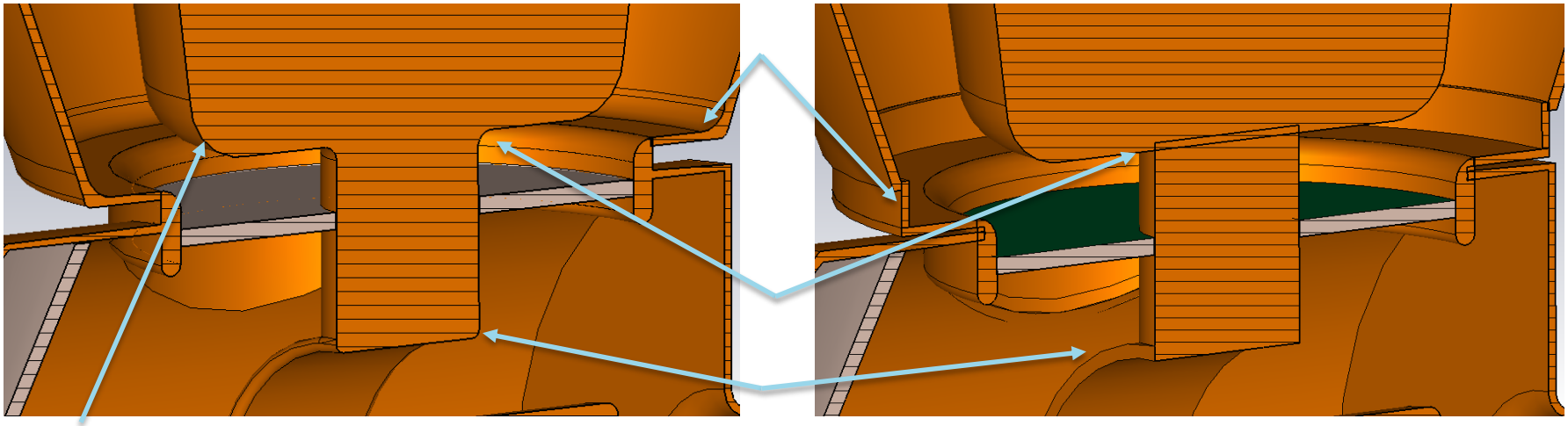

R_s

Window is up by 7 mm
Corners are smoothed and rounded
May be corona ring will be needed on the coupling ring

How big R_s can be?

Port at the cavity input

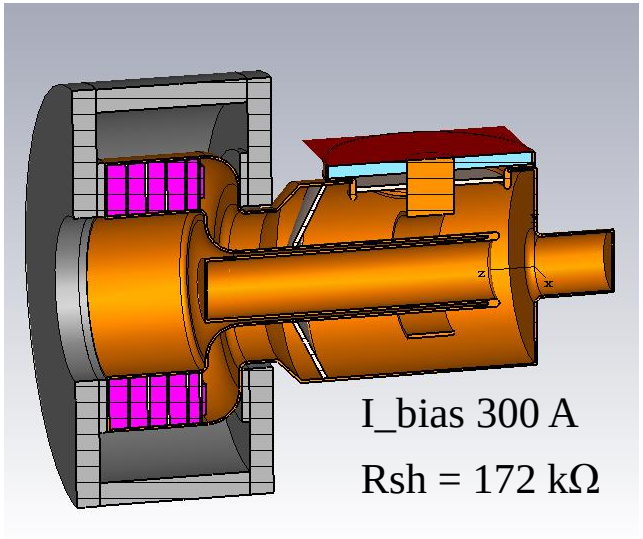

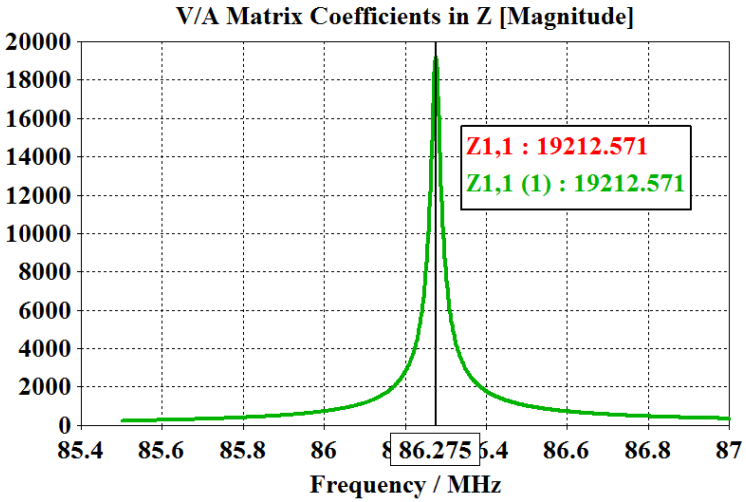

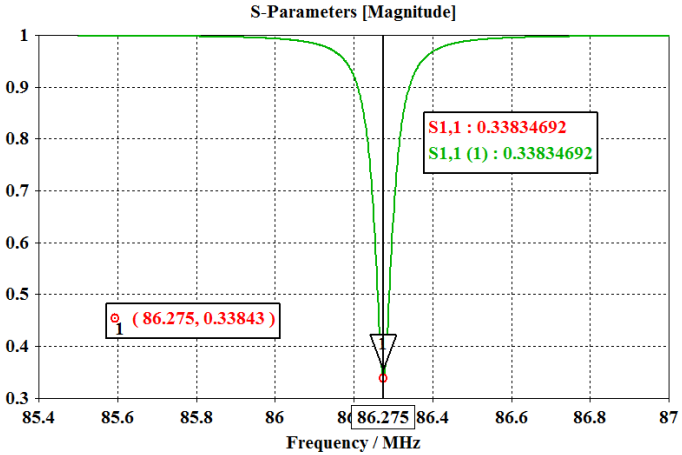

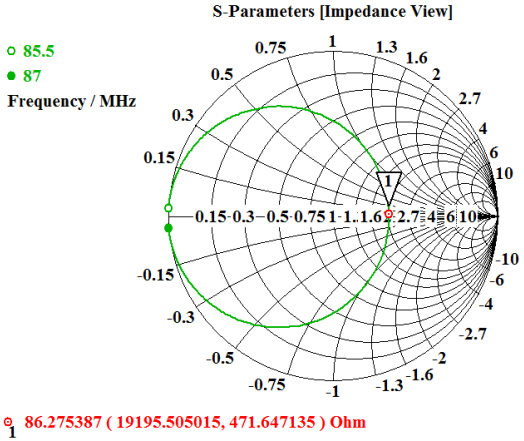

Parameters with new position of the window

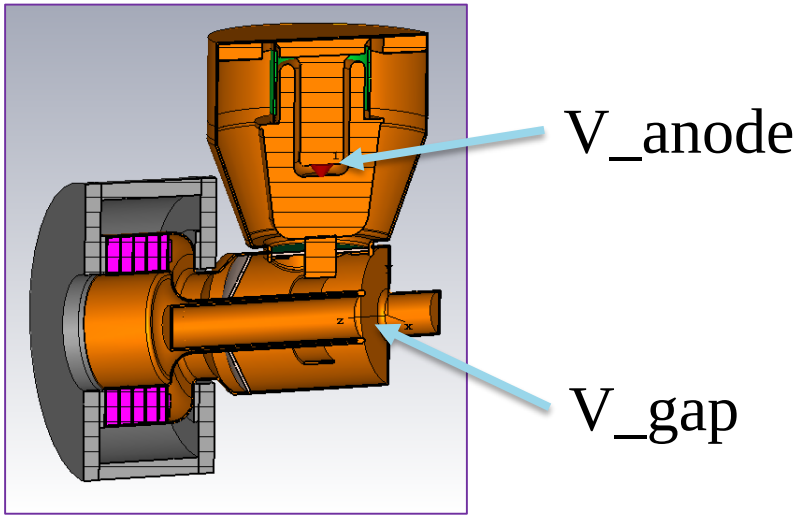

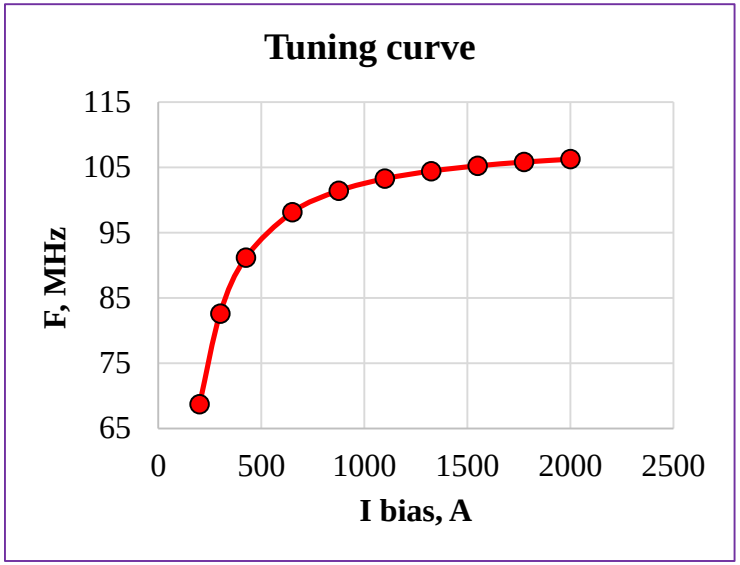

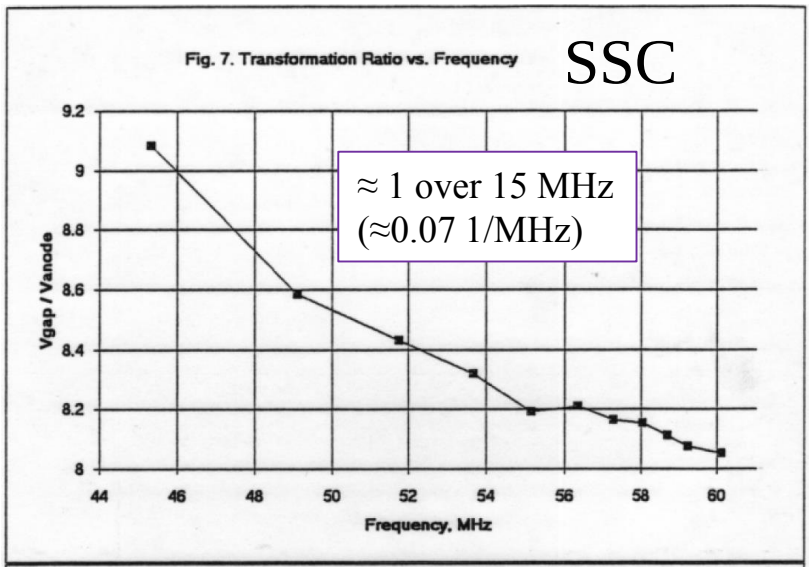

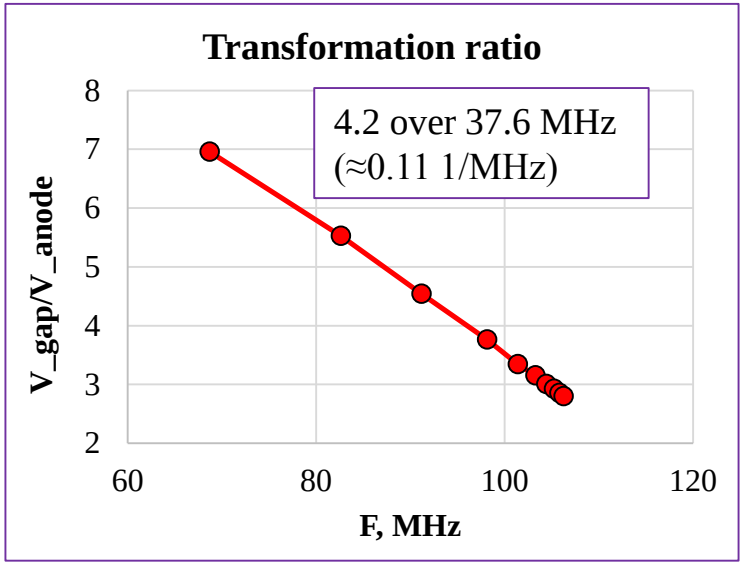

Parameters with new position of the window

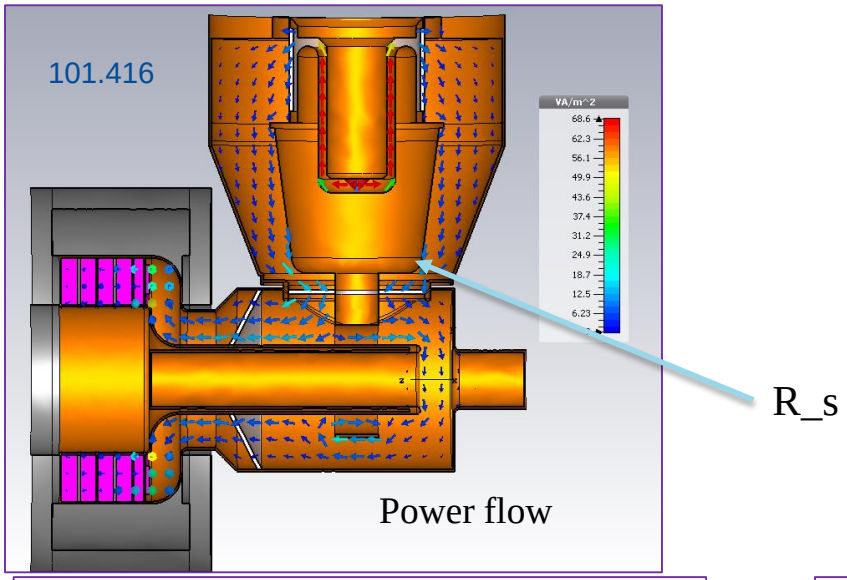

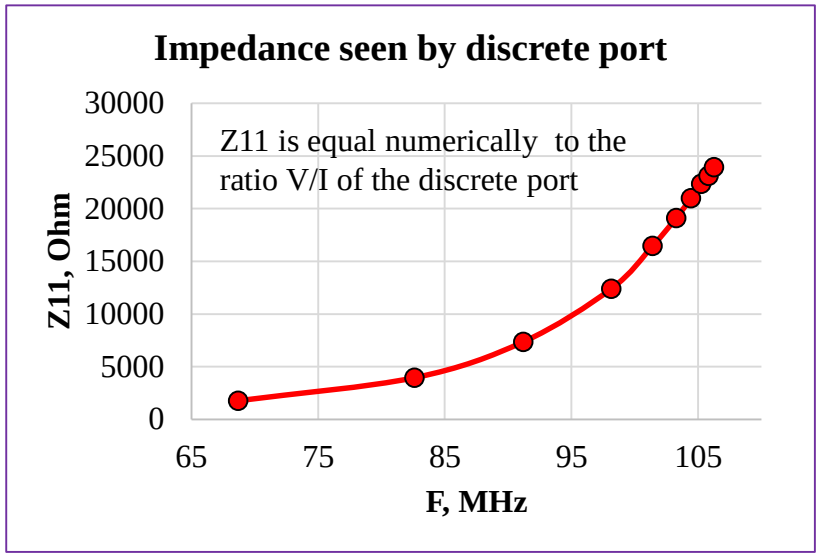

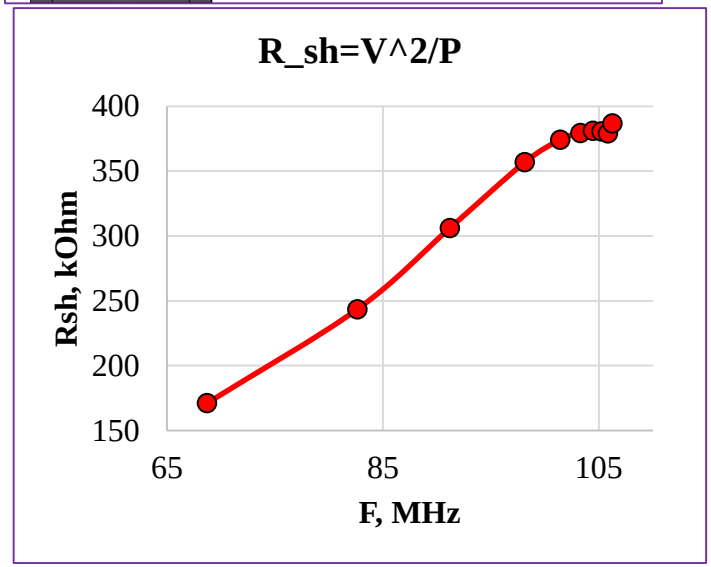

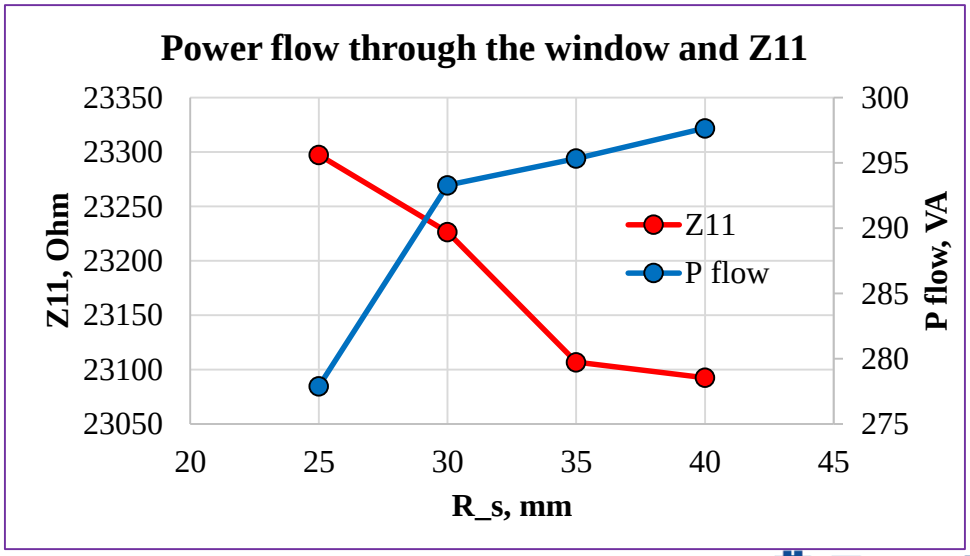

Next

Optimal balance of the tuning parameters
More mechanics
Losses and thermo-analyses