Writeup & Tuning stub

C.Y. Tan
29 Sep 2016

Writeup

- Please have a look on the shared drive:
  - smb://beamssrv1.fnal.gov/2nd_harmonic/project_writeup
  - Latest version is always in that directory called **project_v*.docx** and **project_v*.pdf**
- There is no deadline.
- Chapters, sections with stubs have names attached.
  - These are suggestions. Chapters, sections can be changed, and moved as required.
- Give me your writeup in whatever format you like, I will update the file.
- Good to start writing now so that we don't forget what we did!
  - It will be a large document.
  - Probably about 200 pages.
- Nice for posterity to show how smart (or dumb) we were all in one place!

Tuning stub for cathode resonator

- One thing that bothered me was why does adding a tuning stub flatten out the VWSR?
  - I had expected correction should only be good at one point!

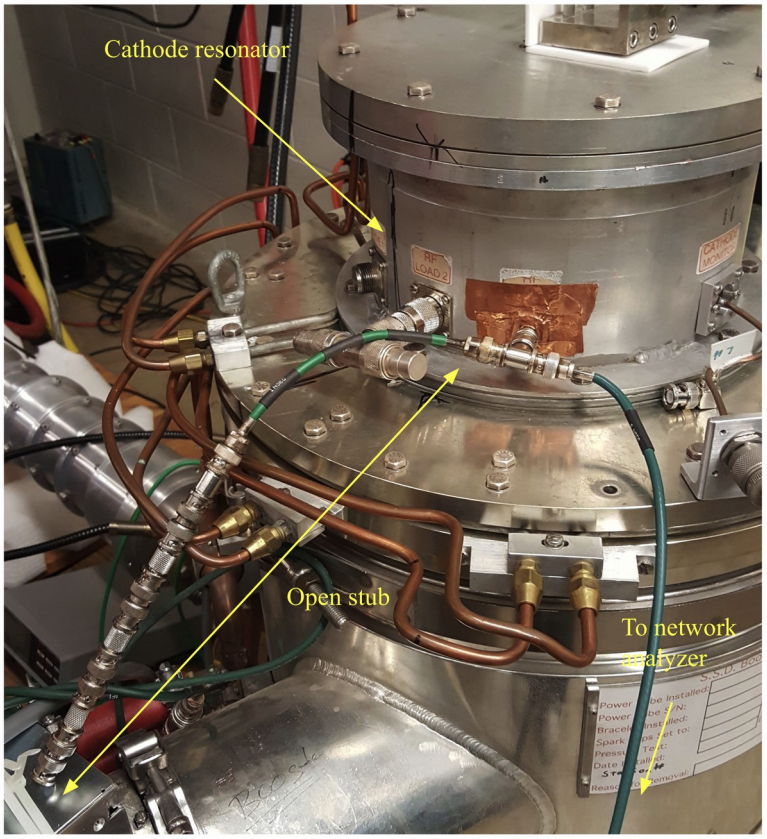

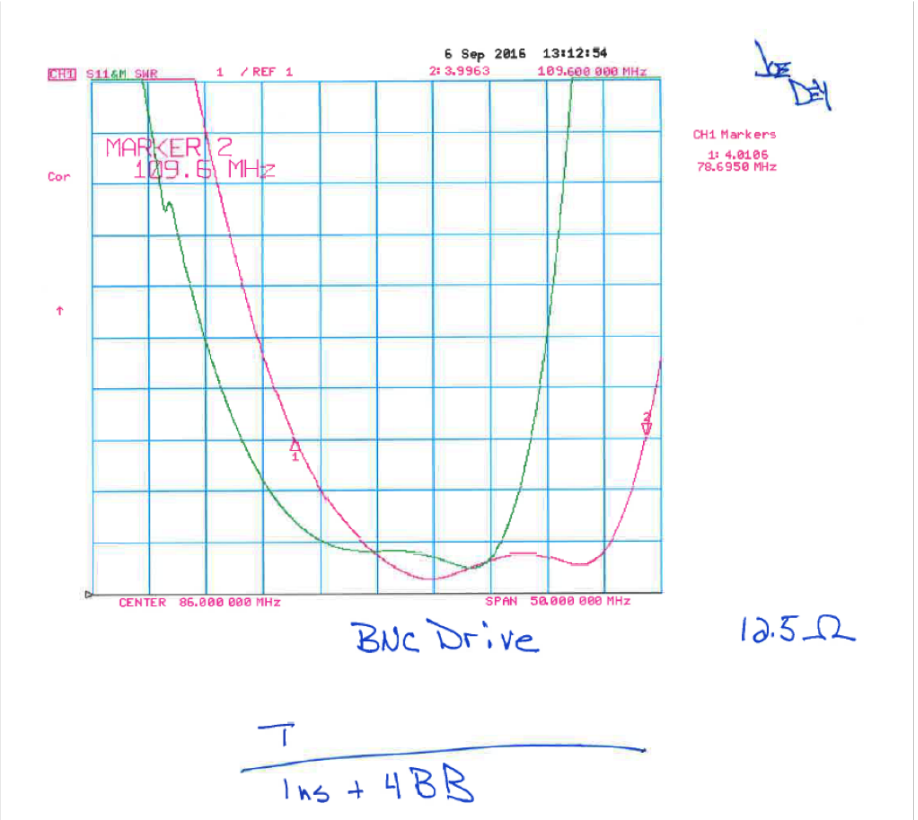

Frequency response of cavity (s21), no stub

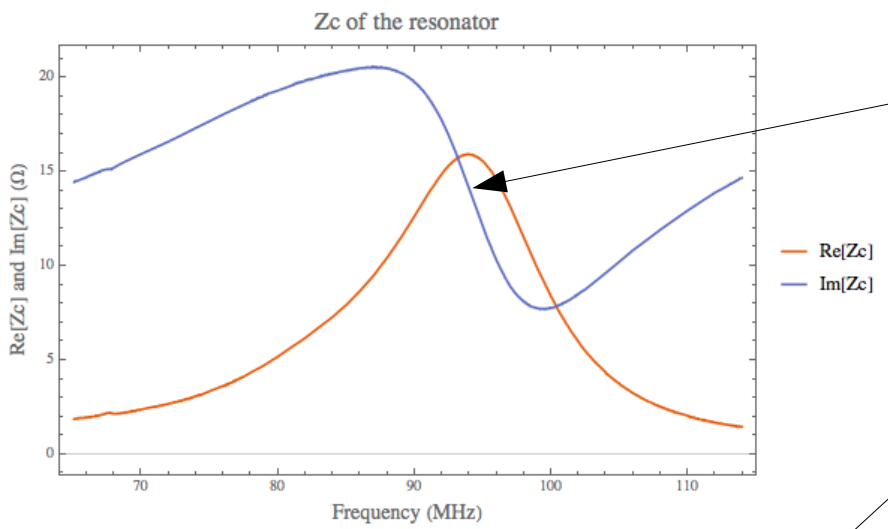

Notice that imaginary part is not zero at resonance!
Inductive impedance comes from banana plug + HN to N adaptor at the power input! Inductance is about 35 nH

We have to cancel this inductance somehow in a broadband sense.

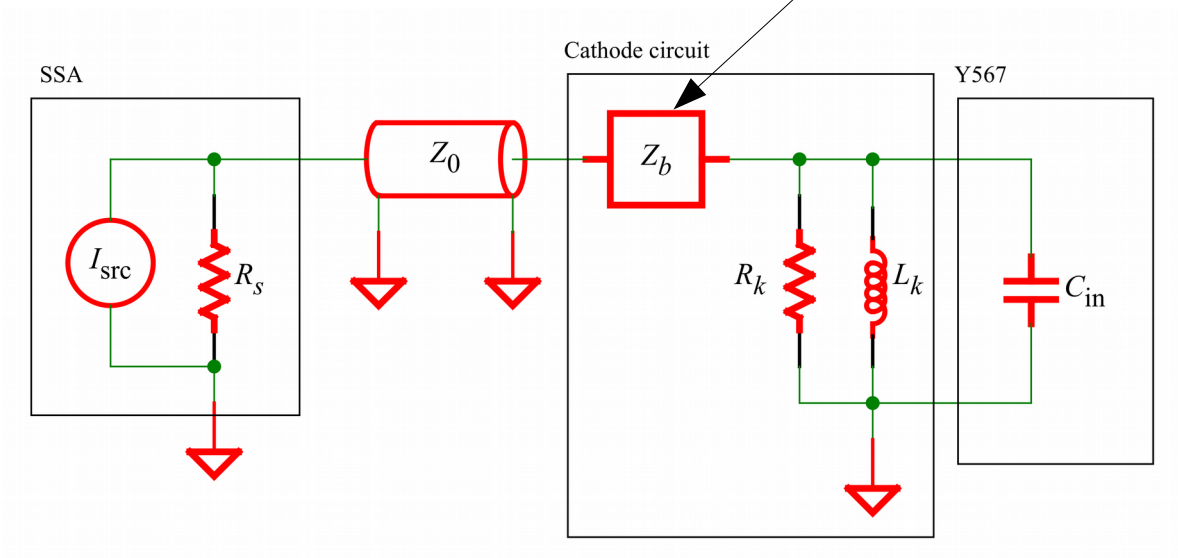

Matching Stub

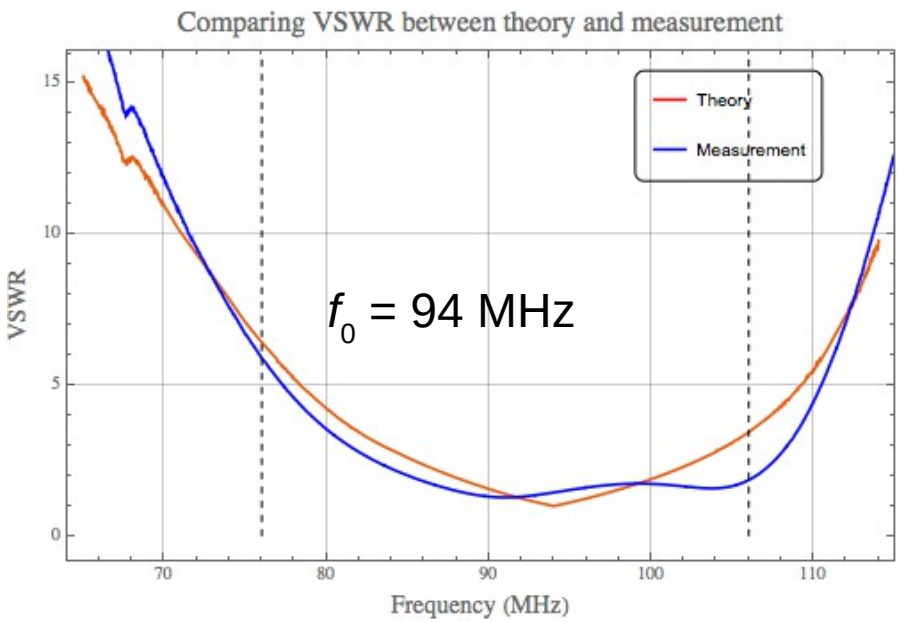

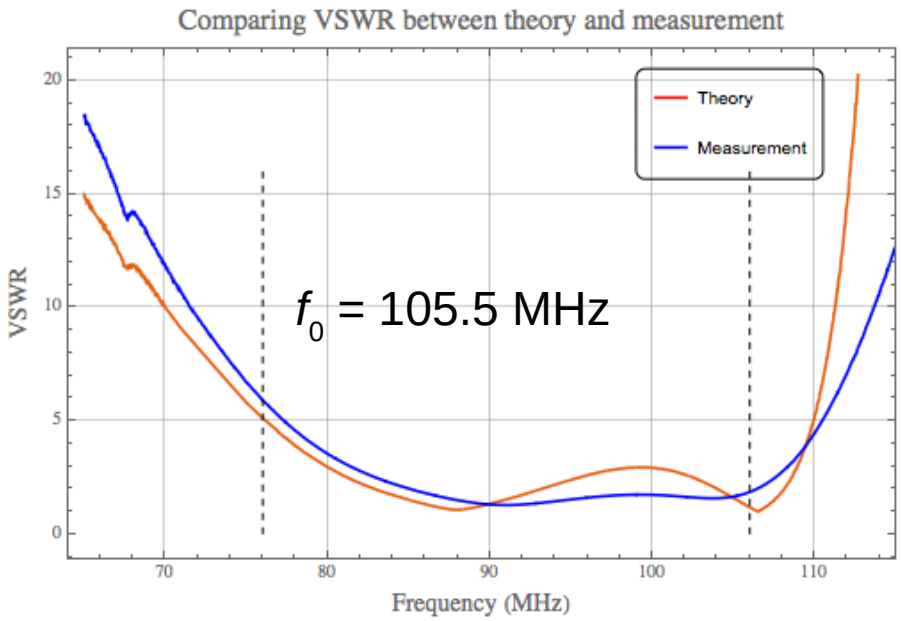

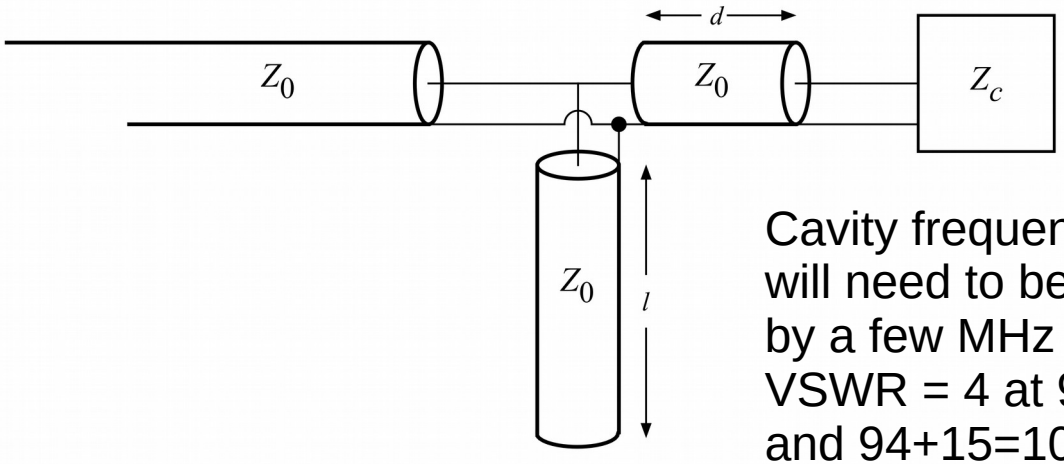

Cavity frequency is too high, will need to be shifted down by a few MHz in final design. VSWR = 4 at 94-15=79 MHz and 94+15=109 MHz

Reason

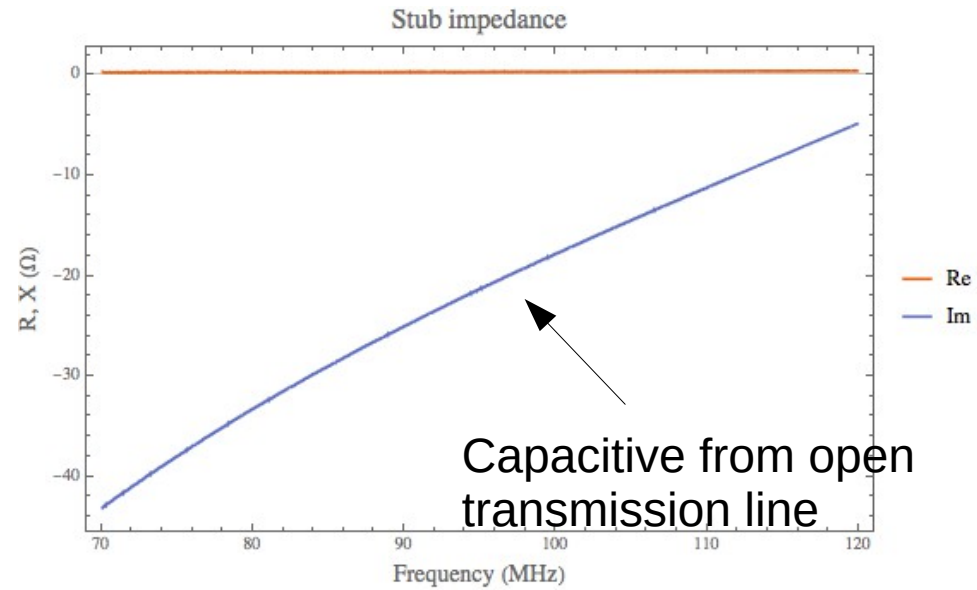

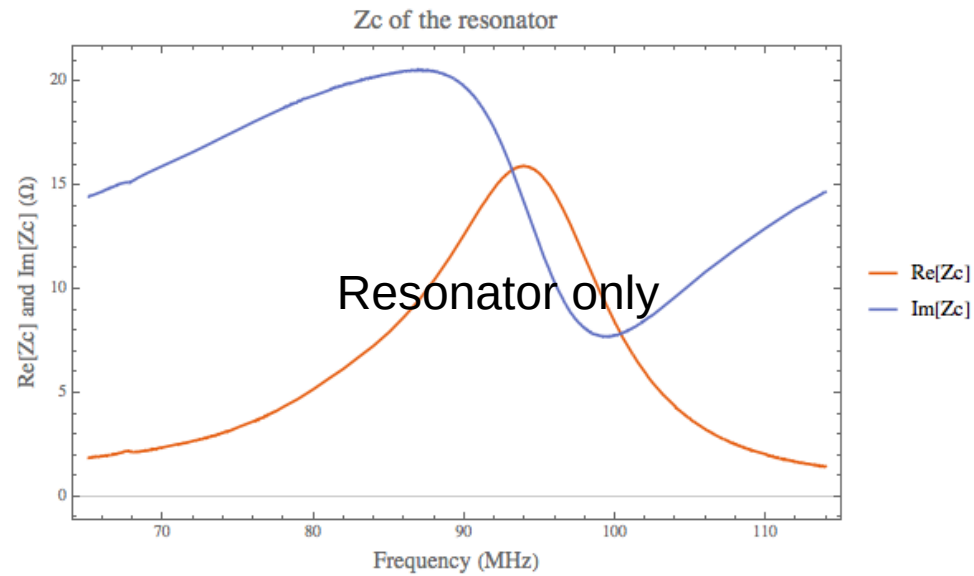

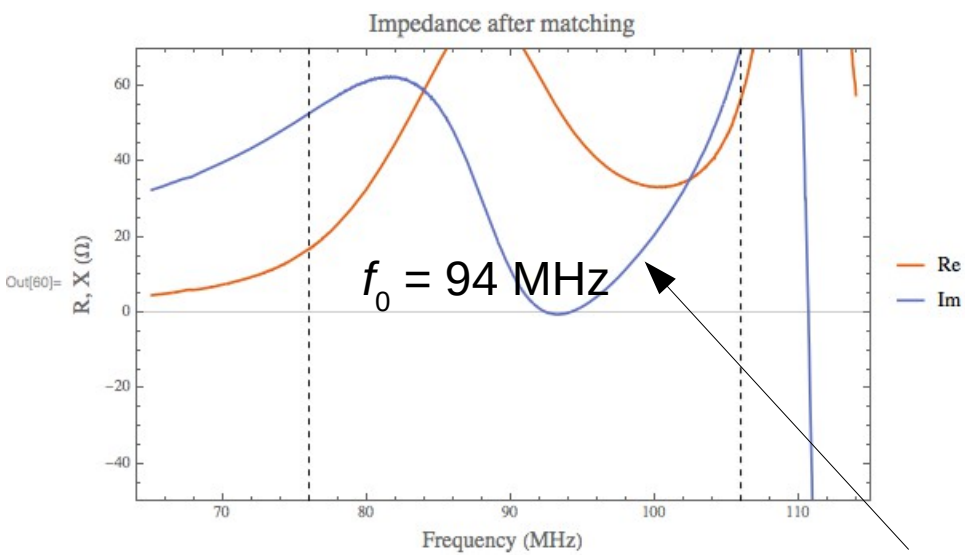

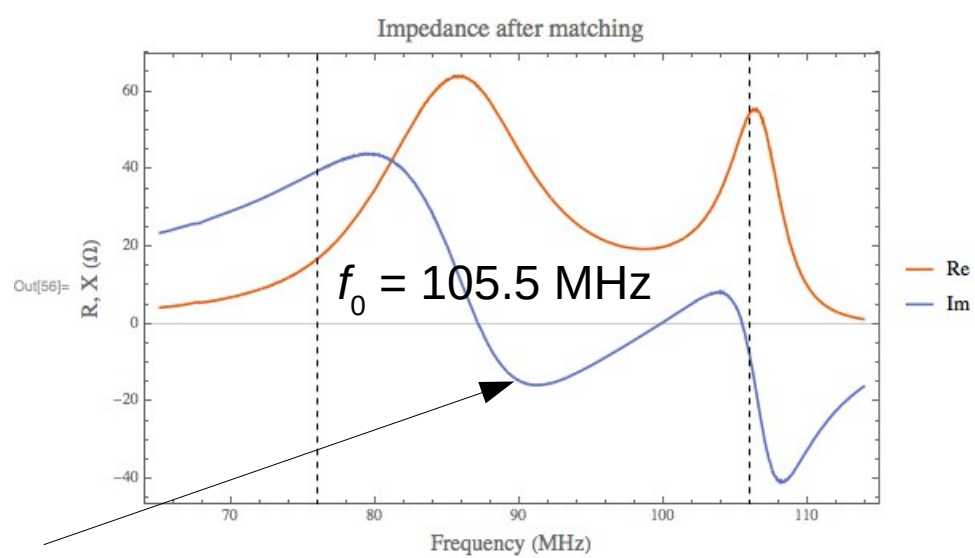

More smaller imaginary parts at 105.5 MHz

Reason (cont'd)

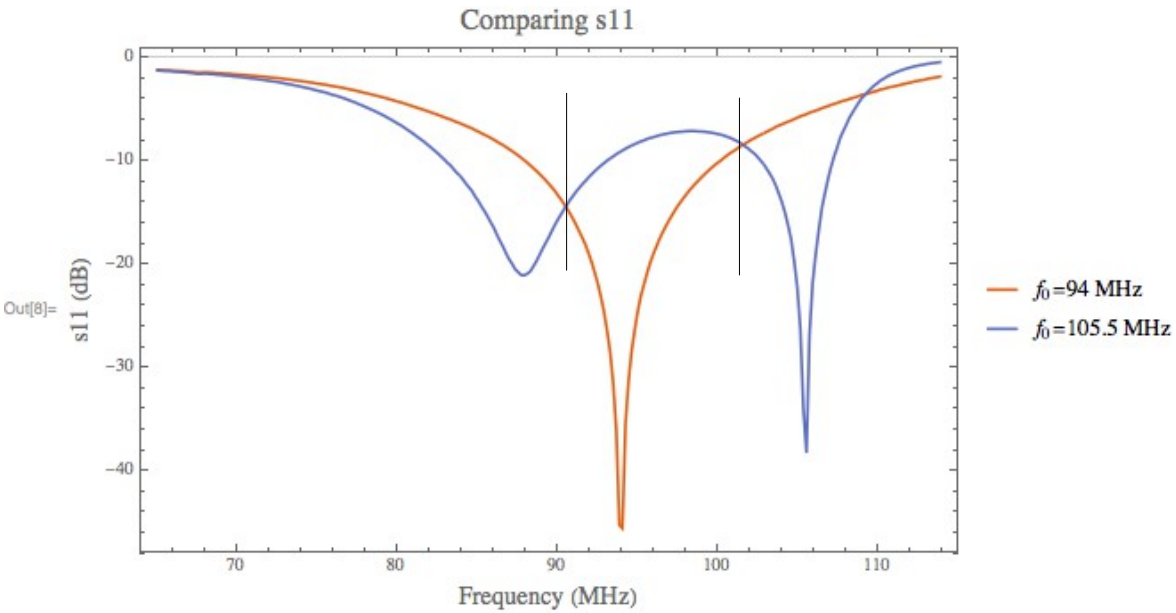

Clearly s11 is better for a wider range and at the places we care for f_0 = 105.5 MHz

Conclusion

This gives us confidence that

- When high power stub is built, we can match to present cathode resonator.
- For new cathode resonator for the final cavity which has the correct centre frequency, we should be able to match it since we understand why the bandwidth is increased.