A Perpendicular Biased 2nd Harmonic Cavity for the Fermilab Booster

Edited by C.Y. Tan

Contributors: J.E. Dey, K.L. Duel, M.R. Kufer, J.C. Kuharik, R.L. Madrak, R. Padilla-Dieppa, W.A. Pellico, J.S. Reid, G. Romanov, M.H. Slabaugh, D. Sun, C.Y. Tan & I. Terechkine.

8 March 2018

A perpendicular biased 2nd harmonic cavity for the Fermilab Booster is currently being designed and built. The goal for the cavity design is to have 100 kV in the gap that works at both injection and at transition. This is the technical document that describes the measurements, simulations and decisions that were made for this cavity.

A Perpendicular Biased 2nd Harmonic Cavity for the Fermilab Booster

Edited by C.Y. Tan

Table of Contents

1 Introduction

It is well known for a long time that by flattening the bucket at injection, it is possible to increase the capture efficiency because of increased bucket area and a reduction in space charge density. See, for example, Ref. [1]. Although beam capture efficiency in Booster is already quite efficient, > 90% for 5.3×10^{12} protons, there is still an activation problem in Booster from beam loss. Therefore, even a gain in efficiency of a few percent can help mitigate this problem. This is the main motivation for the installation of 2nd harmonic cavities in the Booster.[1]

The addition of 2nd harmonic cavities also opens up the possibility of using it at transition to help the beam cross it and linearization of the accelerating voltage for bunch rotation at extraction.

At transition, the main mechanism for beam loss is bucket mismatch and not from space charge. See Ref. [2]. The 2nd harmonic cavity can be used to shape the bucket so that the beam is better matched to it before and after transition.

At extraction, the 2nd harmonic cavity can be used to linearize the voltage during bunch rotation so that there can be a reduction in the tails of the rotated distribution. [3]

The above three requirements for the cavity opens up technical challenges that have to be met:

1. The cavity that operates at $(2 \times 37.865) = 75.73$ MHz at injection, $(2 \times 52.25) = 104.5$ MHz at transition and $(2 \times 53.18) = 105.63$ MHz at extraction. This means that this cavity must be able to track the main frequency ramp that goes between these three frequencies in approximately 33 ms.
2. There must be sufficient volts on the cavity to effectively shape the bucket so that capture can be improved. ESME simulations show that for improved capture, the voltage on the 2nd harmonic cavity must be at least 100 kV, although optimally it should be 50% of the fundamental accelerating voltage. Capture efficiency improves slightly with higher voltage. See section 1.2.1.3
3. The voltage required for transition crossing depends on the method used. For example, if focus free transition crossing is selected, the optimum voltage ratio between the fundamental and the 2nd harmonic voltages is $\frac{815\text{ kV}}{224\text{ kV}} = 3.64$. This means that at least two cavities are required for this scheme to work optimally. See section 1.2.2.
4. For extraction, the required voltage ratio between the 2nd harmonic to the fundamental is 1/8 for canceling the cubic term. Presently (2016), the extraction voltage is 240 kV and thus only 30 kV is required for the 2nd harmonic cavity during bunch rotation.

[1] In this report, 2nd harmonic means twice the fundamental frequency.

These technical challenges imply that the cavity must be tunable and thus a ferrite loaded cavity must be used in the design. The high voltage requirement for one cavity means that high Q is necessary. In order to satisfy these requirements, a perpendicular biased cavity is proposed.

1.1 Historical perspective

Perpendicular biased cavities were proposed as a scheme for achieving higher Q and thus higher voltages compared to parallel biased cavities back in the 1980s. [4] And although this type of cavity has been designed and built for rapid cycling synchrotrons in the past, for example, for TRIUMF and the SSC [5], none of them became operational. The most successful cavity to date has been the TRIUMF cavity [6] that reached its design voltage of 65 kV. However, this cavity subsequently developed a problem and never did see beam.[2] This is not to say that perpendicular biased cavities are a pipe dream. In the subsequent years, perpendicular biased cavities have been successfully built, commissioned and made operational. However, these cavities typically have a small frequency sweep of < 1 MHz. For example, the Recycler 53 MHz cavities are perpendicularly biased and have a frequency sweep of 10 kHz. [7]

Thus, if successful, the cavity that is being proposed for Booster will be the first perpendicular biased cavity that has a large frequency sweep range of about 30 MHz that will be installed into a rapid cycling synchrotron.

1.2 ESME simulations

We have used ESME [8] simulations to test out a series of voltage settings on the 2nd harmonic cavity to see its effect on capture efficiencies at injection. For these simulations, we will use PIP (Proton Improvement Plan) proton intensities, i.e. 5×10^{12} protons at injection. Note: PIP specifications require 4.2×10^{12} protons at extraction. We will assume that the total voltage available from the fundamental RF is 1 MV.

In the case of transition crossing, we have used the "focus free" method [9, 10] in the simulations as an example. This is just a particular choice that we have chosen because there are other methods to achieve matching of the beam to the bucket before and after transition.

[2] There is a vacuum leak from a crack in the ceramic window in the tuner [34], but the exact cause of the window failure has been lost in the mists of time. This cavity was shipped from TRIUMF to FNAL and it is stored at MI-60 now (2015).

1.2.1 Injection

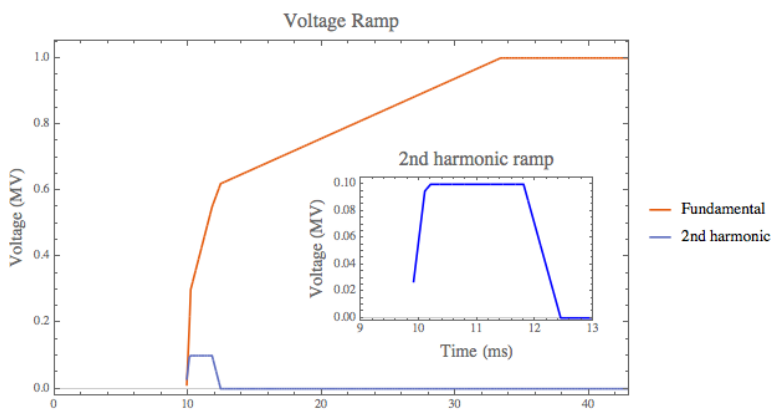

Figure 1: The voltage ramp on the fundamental and the 2nd harmonic used in the ESME simulations. In this example, the maximum 2nd harmonic voltage is 100 kV. The beam is injected at 0 ms and allowed to debunch. The RF voltage ramps start at 9.9 ms.

In our injection simulation, 200 MHz structured beam is injected into Booster from Linac at 0 ms. The RF is not ramped from zero volts until 9.9 ms later, this is to allow time for the beam to debunch. After 9.9 ms, the fundamental RF is ramped up to 1 MV using its nominal ramp profile, while the 2nd harmonic RF is ramped up and down in 2.54 ms. The ramp profiles of both RF systems used in the simulations are shown in Figure 1. The injected beam and flattened bucket when the 2nd harmonic voltage is at 100 kV are shown in Figure 2. Besides being flattened, the bucket area is also slightly increased with the 2nd harmonic turned on.

Table 1 summarizes the results when we change the voltage on the 2nd harmonic cavity. These simulations were done with 10500 macro particles and the number of macro particles that remained alive just before transition was counted. From this table, we can see that there is a point of diminishing returns in the capture efficiency after 100 kV. Of course, the efficiencies do not quite correspond to reality but these results give us a notion as to what value to set the voltage on the 2nd harmonic cavity. Using these results, we have specified that the voltage on the 2nd harmonic cavity should be 100 kV for an improvement of ~90% (1.8% loss to 0.2% loss).

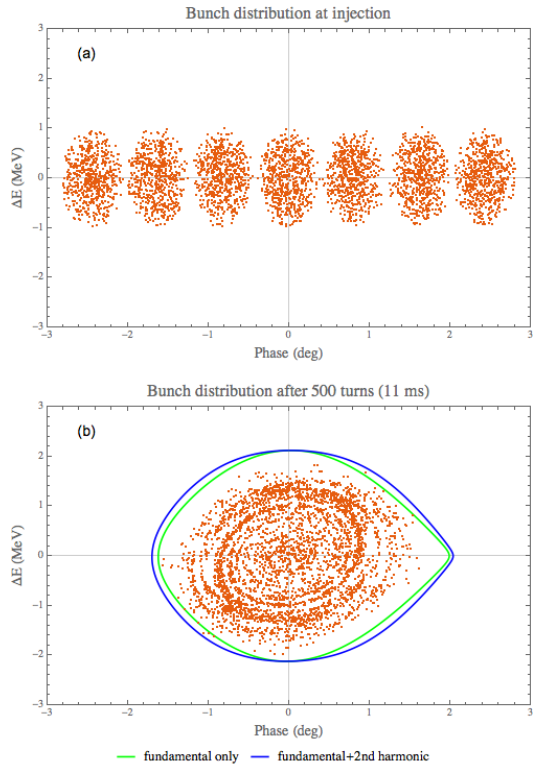

Figure 2: (a) The initial distribution of the injected beam that has 200 MHz structure. (b) The captured beam at 11 ms with 2nd harmonic at 100 kV.

2nd harmonic voltage (kV)	Number alive	% alive
0	10318	98.2
50	10417	99.2
100	10483	99.8
200	10488	99.9

Table 1: Summary of capture efficiency results.

1.2.2 Transition crossing

The natural problem in transition crossing is matching the beam to bucket right after transition. Any mismatch causes a quadrupole oscillation [11] of the beam that dilutes its longitudinal emittance. See Figure 3. There is a number of solutions to fix this mismatch besides just damping out the

oscillations, for example with a γt jump system [12] or with RF methods discussed in references [9, 10, 13]. But, in the end, all these methods require more volts from the cavities, whether this comes from the fundamental cavities alone or from a combination of fundamental and higher harmonics cavities. We discuss one particular method here, called "focus free" for crossing transition. This method, in principle, only works if the space charge induced instabilities is not a problem. And from ESME simulations for the beam charge of 4.2×10^{12} protons in PIP (and 6.4×10^{12} protons in PIP II), space charge has negligible effects.

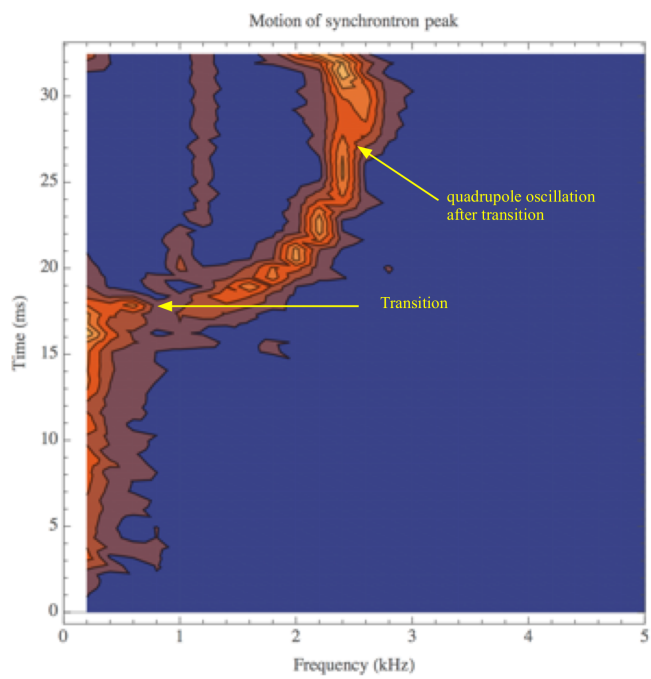

Figure 3: There is a quadrupole oscillation due to bucket mismatch after transition crossing in the Booster. Data was taken on 04 Nov 2015 for 4.5e12 protons.

For the focus free method to work, we must flatten the peak accelerating voltage so that the head and the tail of the bunch both see *the same accelerating voltage as the synchronous particle* – in effect the bunch looks like it is "drifting" through transition albeit being accelerated. A quick calculation shows that the ratio between the fundamental voltage and the 2nd harmonic voltage that creates a flatness variation of 0.6% is $\frac{816\text{ kV}}{224\text{ kV}} = 3.64$. This means that bunches which have a length of ± 49 degrees or less will see at most $\pm 0.30\%$ variation in voltage in this optimized case. See Figure 4. Since the required voltage on the 2nd harmonic is 224 kV, we would need at least 2 cavities in this method.

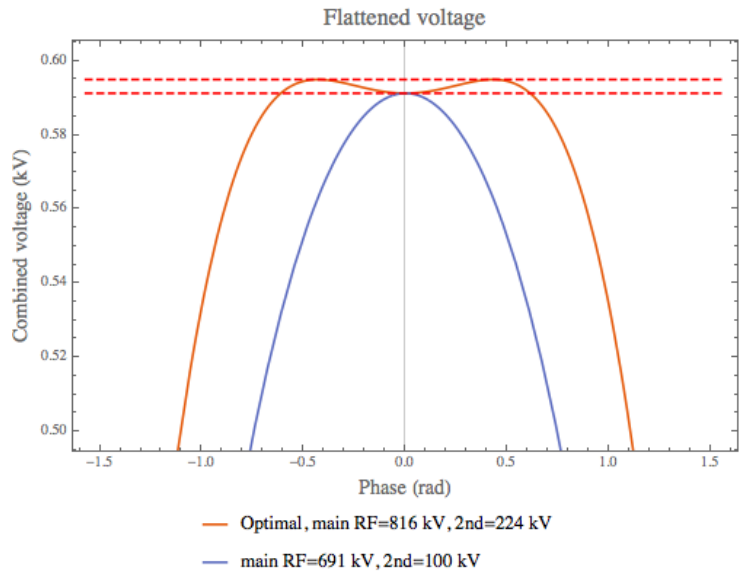

Figure 4: This graph shows the flattened voltages that can be used for going through transition. The dashed red lines on the graph indicate ±0.3% variation in the voltage variation on the optimized flat voltage curve (red). The blue curve is when the 2nd harmonic voltage is limited to 100 kV.

1.2.3 Bunch rotation at extraction

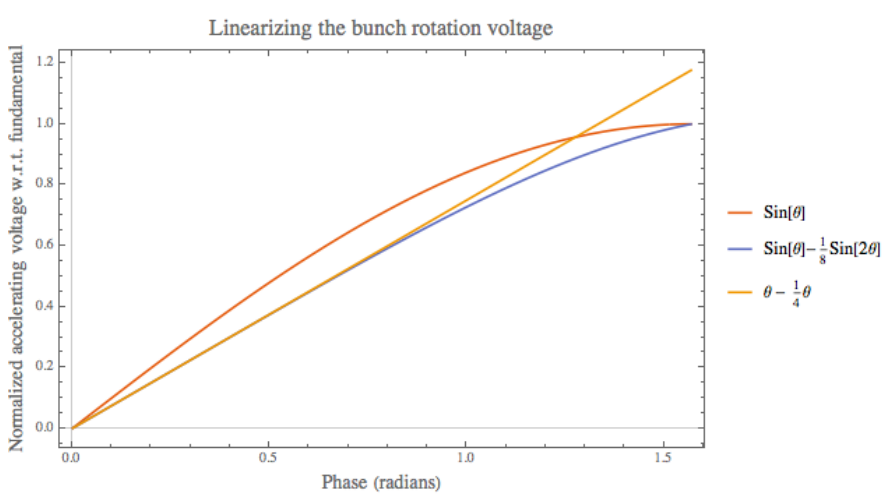

Figure 5: Linearizing the bunch rotation voltage.

Booster uses bunch rotation at extraction to reduce the bunch length of the beam before it is injected into the Recycler. It is trivial to show that the required 2nd harmonic voltage to cancel out the cubic term

of the fundamental sinusoid voltage is 1/8th its peak voltage. The normalized voltage w.r.t. the fundamental with and without the 2nd harmonic cavity compared to a pure linear voltage is shown in Figure 5. However, for operations, a higher voltage is required because of beam loading and the bunch distribution.

The results from the ESME simulations with and without the 2nd harmonic cavity are shown in Figure 6. The optimized voltages are 130 kV for the fundamental and 30 kV for the 2nd harmonic, and thus the voltage ratio is just below ¼. The improvement in rms energy spread is about 17% with this ratio.

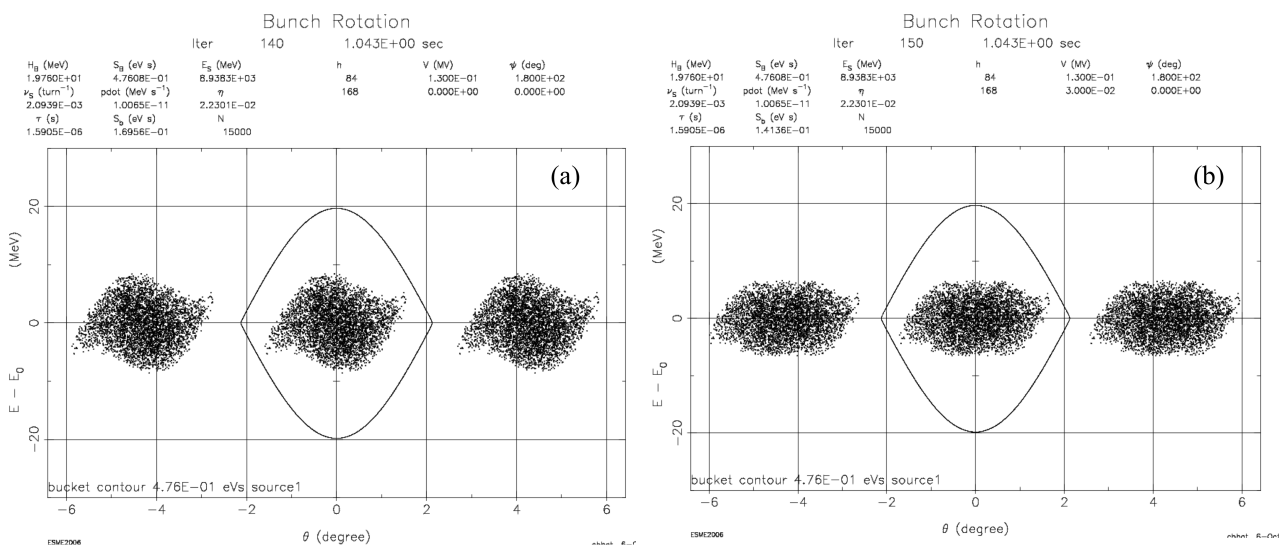

Figure 6: This is the 8 GeV bunch rotation simulated with ESME. (a) Only the fundamental cavity is used here. The rms energy spread after rotation is is 3.44 MeV. (b) This time, the 2nd harmonic is turned on. The voltage ratio between the two cavities is 0.23. The rms energy spread after rotation is 2.85 MeV [14].

1.3 The voltage ramps

The proposed ramps are shown in Figure 7. The goals are:

1. Improve both injection and transition efficiencies. It is proposed that the cavity be "on" for 3 ms at injection and at transition.
2. Improve both injection and extraction efficiencies. It is proposed that the cavity be "on" for 3 ms at injection and 1 ms at extraction. It is expected that the required voltage for bunch rotation is < 50 kV.

The duty factor of the RF system is 10% or less which helps to reduce the power losses in the garnet. The injection frequency is at 75.73 MHz, the transition frequency is 104.5 MHz and the extraction frequency is 105.6 MHz. The heating and cooling of the garnet and the identification of the local hotpots are discussed in section 8.3.

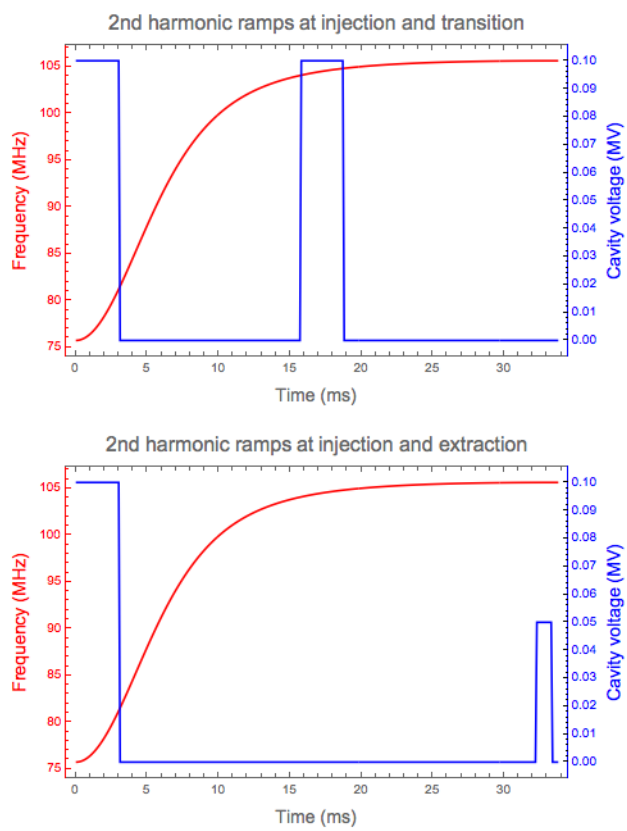

Figure 7: The proposed 2nd harmonic voltage ramp. The cavity is "on" during injection and transition or extraction and "off" otherwise.

2 The 2nd harmonic cavity

The NX9 model of the cavity is shown in Figure 8. We have used the experiences from both TRIUMF and SSC to improve the design. Our goals for the new design are:

1. Double both the operating and frequency swing ranges.
2. Improvement of the cooling of the garnet.
3. Removal of BeO cooling disks.

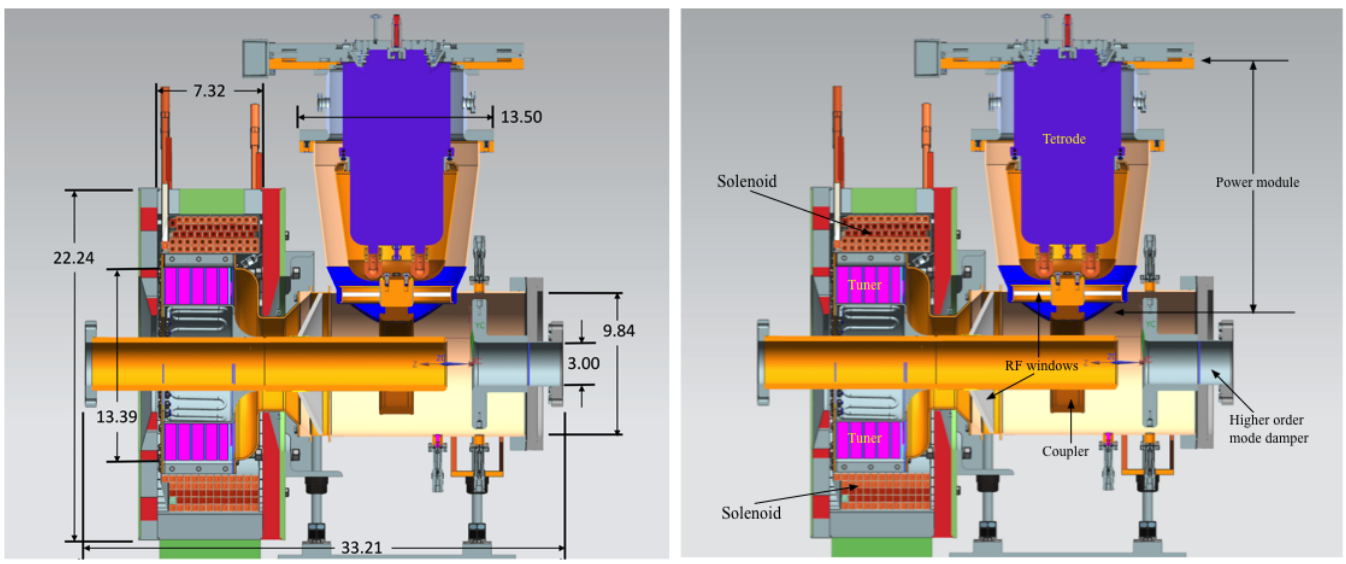

Figure 8: A cross sectional view of the 2nd harmonic cavity. All dimensions are in inches.

It turns out that cooling the local hotspots in the garnet is very important because these hotspots can cause a fracture in the garnet and destroy the cavity. See Ref [5] where the authors state that some of the garnet literally melted at the hotspot. Learning from this lesson, we have used MWS (Microwave Studio) and COMSOL to help us locate where these hotspots are so that we can take care of them before any disaster strikes.

The use of BeO as the material for cooling disks is troublesome because there are significant safety requirements for handling them. Our design uses Al_2O_3 instead which, although, has a conduction coefficient 30 W/m K that is ten times worse than BeO (265 W/m K), MWS simulations show that when we use Al_2O_3 cooling disks, the garnet is better cooled than without.

Furthermore, the geometry of the cavity that holds the garnet has been shaped so that cooling channels can be embedded at both the inner and outer radii of the shell that holds the garnet. Thus, this new geometry also increases cooling of the garnet.

The garnet material that we have chosen for our cavity is AL800. It is necessary to use garnet rather than ferrite material, like NiZn ferrite, for perpendicular biasing because in this scheme, the cavity operates near saturation magnetization. As a comparison, AL800 saturates at 800 G (CGS units), while NiZn ferrite saturates at 3.2 kG. Thus, it is much easier to design a magnet that can saturate AL800 when compared to NiZn ferrite.

Another garnet material, AL400, is also a possible choice for the tuner. It has a lower saturation magnetization of 400 G compared to AL800. But its Curie temperature is 130°C which is too low because local hot spots can have temperatures that exceed 100°C. Contrast this to AL800 which has a Curie temperature of 200°C. Thus, AL800 is a good compromise between saturation magnetization and Curie temperature. [15]

The loss tangent, $\tan \delta_m$, of AL800 is a critical parameter for calculating heating in the garnet. Unfortunately, all the published literature that we have found does not give an accurate parameterization of it. We have spent a lot of effort in measuring $\tan \delta_m$ to get it right. Our measurements are described in section 3. We have also measured the loss tangent of the glue that binds the AL800 sectors together and to the alumina cooling ring in section 4.

Parameter	Value	Units
Frequency range	75.7 – 105.6	MHz
R/Q	> 30	Ω
Higher order modes impedance	$\lesssim 2$	kΩ
Gap voltage	100	kV
Average garnet permeability (μ)	$1.3 < \mu < 3.5$	-
Anode impedance	1200 – 5000	Ω
Tube efficiency in class B operations	> 60	%
Repetition rate	15	Hz

Duty factor (66 ms cycle)	~10	%
Diameter of beam pipe	3	inches

Table 2: The specifications of the 2nd harmonic cavity

The garnet is biased with a solenoid so that its average permeability over the entire tuner volume can span the range from 1.3 to 3.5. The solenoid design will be discussed in section 9. Since the B-field will be ramped at 15 Hz, eddy currents induced on the surfaces of the metal shell of the cavity is a major concern. Eddy current mitigation will be discussed in section 8.3.

The specifications of the cavity are summarized in Table 2.

2.1 RF power

In order to save costs on the required infrastructure to power this cavity, we have decided to use the same tetrode tube, the Y567B[3] that is used to power the Booster RF cavities, to power our cavity. The only caveat is that although the Y567B is specified to work to 108 MHz, it has never been used at Fermilab at the required frequency range for the 2nd harmonic. In order to verify that the Y567B is capable of working in this frequency range, a test stand has been built to check its operating characteristics. The results from these tests will be discussed in section 13.

2.2 RF windows

In order to separate the vacuum from air, RF windows are required. There are two AL_2O_3 windows in this design. One window in the power module separates the tetrode cavity from the vacuum and another window separates the garnet section from the vacuum. The final location of the second window is a compromise between minimizing the following effects:

1. Multipacting
2. E-field on the surface of the window
3. Heating of the window

and ease of assembly of the cavity.

A consideration in the design of the RF window is how it impacts the length of the RF power module. Since the RF power module is strongly coupled to the accelerating cavity, the RF window has to be designed to not impact the input impedance seen by the Y567B. Small changes in the length of the

[3] Although the tube is generically called the Y567B, the actual tube used in the Booster cavities is a mechanically modified version of the Eimac 4CW150000.

RF module have a significant impact on the input impedance, and some care has to be exercised in its design.

The design of the windows will be discussed in section 12.

2.3 Cavity design

The optimization of the cavity is an iterative process: the dimensions of the garnet and the non-garnet parts are optimized so that the cavity resonance spans the required frequency range for $\mu = 1.3$ to 3.5. The value of the coupling capacitor, which affects the resonant frequency range, is chosen so that both the step up ratio is reasonable for the range of μ's, and the Y567B sees the required anode impedance for it to operate. The iterative optimization of the dimensions, value of the coupling capacitor, and anode impedance continues until the specifications of the cavity summarized in Table 2 are satisfied. The results of the MWS simulations and the transmission line model of the cavity that are used in the cavity optimization will be discussed in section 6. The anode impedance and step up ratio that will allow the Y567B to drive the cavity will be discussed in section 7.2.

2.3.1 Tuner assembly

The tuner consists of a sandwich of 5 rings of garnet and alumina cooling rings. The garnet ring that is farthest from the shorted end of the cavity is thinner than the rest of the garnet rings and has a garnet shim glued on top of it. With the shim, the bias magnetic field is more uniform than without. Thus, the shim lowers the RF power losses, which in turn lowers the temperature on this garnet face during operations. As was discussed earlier, cooling of the tuner assembly is critical for preventing runaway heating. The design of the tuner assembly will be discussed in sections 8 and 17.3.

2.3.2 Power module

Since the power module and the cavity are strongly coupled, there are two normal modes in the system. Computer simulations have found that for the RF cavity to work properly, these two normal modes must be separated by at least 30 MHz so that the excitation of the cavity does not cause the power module to oscillate as well. This is because power will be wasted exciting the power module. This is an important criterion in the design of the power module. Its design will be discussed in sections 6.1.2 and 6.2.1.

2.3.3 HOM damper

The HOM (higher order mode) damper is a Smythe style damper [16].

2.3.4 Mechanical design

The mechanical design is critical for realizing the virtual model that we found from simulations. The reasons for the choices that were made will be discussed in section 17.

3 Measuring the static permeability and loss tangent of AL800 (I. Tereckhine, R. Madrak & G. Romanov)

The ability to accurately model the cavity is key to the success of the design. In particular, it is necessary to know the permeability as a function of the bias magnetic field. The tuning range and losses are determined by the real and imaginary parts μ' and μ'' respectively. The bias magnetic field in the tuner is never perfectly uniform, and in order to properly model the device, these properties must be known at every point in the tuner for all bias settings. In the following sections, we describe our measurements of the static permeability and the loss tangent using the available set of AL800 garnet rings, obtained from National Magnetics/TCI Ceramics. More details can be found in Ref. [17].

3.1 Static permeability

The static magnetization curve was extracted by iteratively adjusting the magnetization curve used in the simulation of the setup, until the simulation results matched measurements. The initial $\mu(B)$ curve was a guess based on the vendor's data for the initial permeability (~50) and a theoretical value for large bias magnetic field.

A sketch of the setup is shown in Figure 9. Ten stacked rings, each having the following dimensions: 3.0″ OD, 0.65″ ID, and 0.5″ thick, are placed inside the solenoid that has a flux return on the bottom and sides made from CMD-10 and G4 ferrite. The solenoid's length, ID and OD are 7″, 4″, and 12″, respectively. The number of turns is 112. A steel plug is inserted on top to improve the uniformity of the bias magnetic field within the samples.

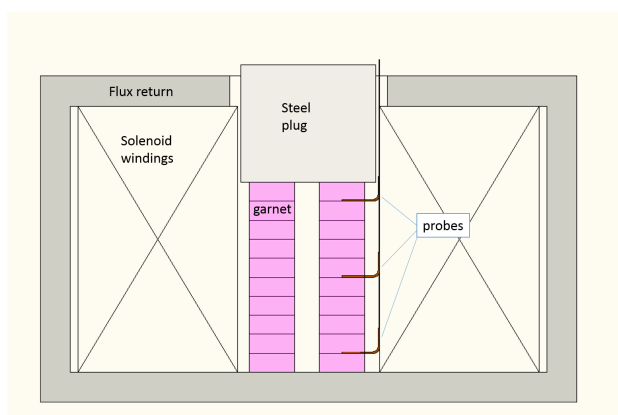

Figure 9: Setup concept for the measurement of the static magnetization.

Three different magnetometer/Hall probe pairs were available for measurement, and they were cross calibrated inside of the solenoid with no garnet. The Hall probes were placed between rings, on the top, bottom, and middle of the stack. The bias magnetic field was measured with each probe as a function of solenoid current.

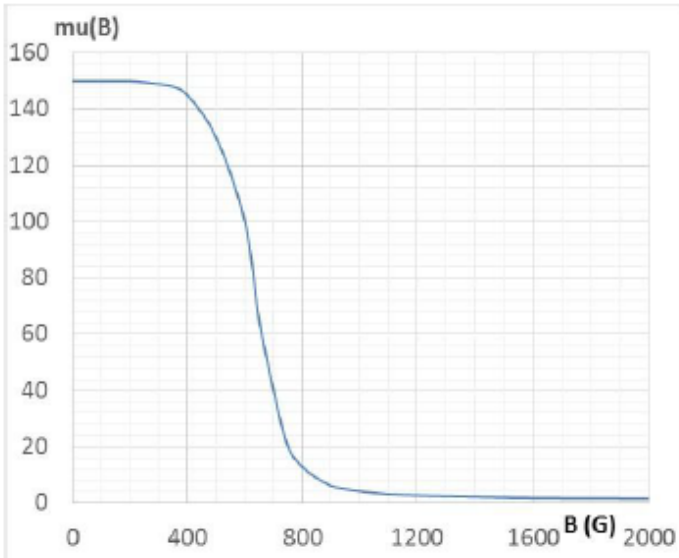

Figure 10: The extracted magnetization curve $\mu(B)$.

The iteratively obtained magnetization curve was gradually changed starting with low current. At each new current level, changes to the magnetization curve used at the previous level were made until the modeling result matched the measurement data. The existence of 1 mm gaps between rings (due to the presence of the probes) had a significant impact on the field distribution within the sample material, especially near the edges of the rings. It was necessary to take this into account in the modeling. The iterative modeling was accepted as converged when changes to the curve $\mu(B)$ become smaller than the spread in the measurement data. The final magnetization curve is shown in Figure 10. A comparison between the magnetic probe readings and the simulated bias magnetic field at the same locations (using the final magnetization curve) is shown in Figure 11.

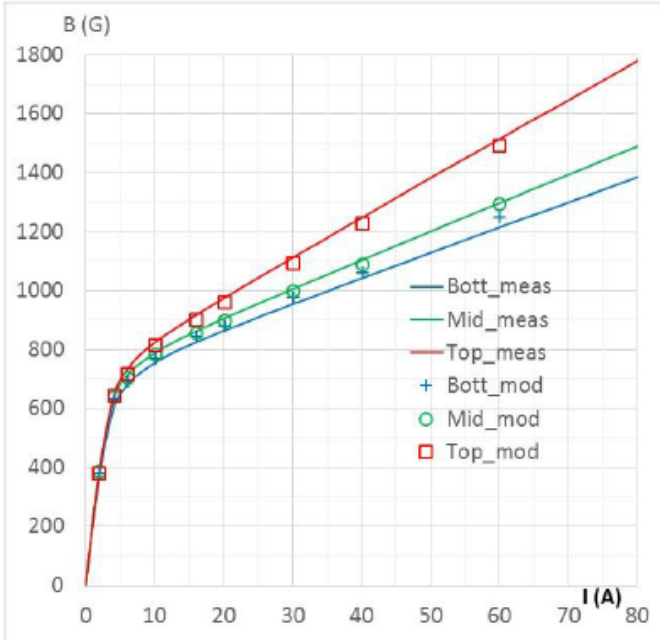

Figure 11: Comparison between measured values and values predicted by a model using the extracted magnetization curve. Values are *B* as a function of solenoid current.

Note that for the real cavity being designed, the maximum (averaged over the garnet) value of μ~3.5. Although this is the average value, the local value of the permeability, being a function of the local bias magnetic field, can be significantly greater. Thus the full magnetization curve is needed for the cavity modeling, unless one can make sure that the bias magnetic field is sufficiently uniform.

More details can be found in Ref. [18].

3.2 Loss tangent

To measure the magnetic loss tangent of the garnet, $\tan\delta_m = \mu''/\mu'$, a test resonator was constructed using the same set of garnet rings used for the static permeability studies. The measurement setup is shown in Figure 12. The cavity was the quarter-wave coaxial type with the garnet rings as a filler material. The resonator is placed inside the same solenoid that was used for the static permeability measurements, which allowed measurements for a range of frequencies. Again, a steel plug was placed on top of the cavity, to help with field uniformity. The quality factor Q of the cavity was measured at various settings of the bias current. As the Q is an integrated quantity, and the loss tangent depends on the magnitude of the bias magnetic field and the frequency, an iterative approach is used, as before, since the field in the sample is not uniform.

Weakly coupled probes were used for the excitation and for measurement of s21 with a network analyzer.

Figure 13 shows a field map in the sample for $I_{sol} = 30$ A current in the solenoid. The frequency of the cavity is 84 MHz, which means the gyromagnetic resonance would occur is at 30 Oe. The minimum field in the sample is ~50 Oe. Note that, without the steel plug, even for $I_{sol} = 40$ A, a large fraction of the sample was in gyromagnetic resonance, and similar resonances were observed, although in smaller volumes, up to near the maximum value of the current.

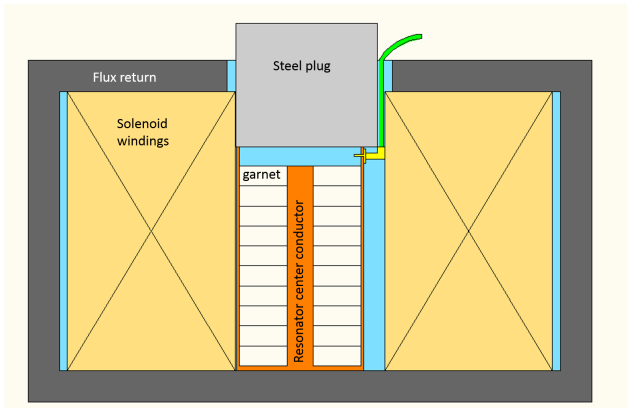

Figure 12: Measurement setup for measuring tan δ_m.

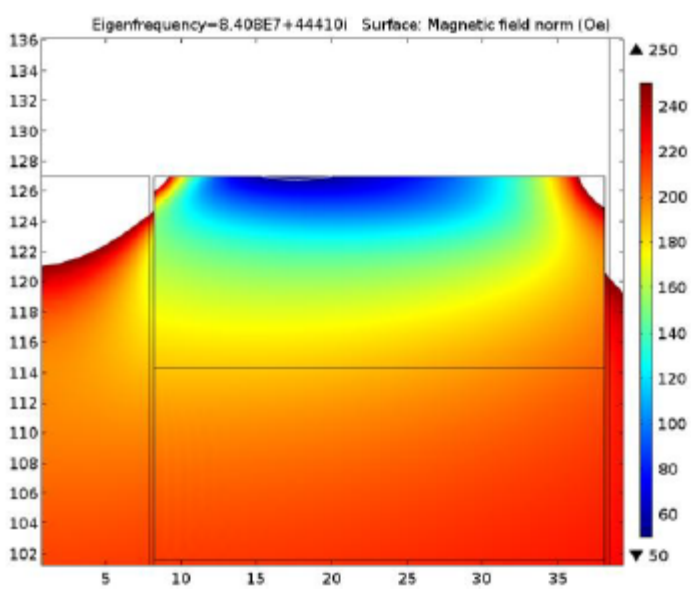

Figure 13: The field map in the sample for I_{sol} = 30 A. The horizontal axis is the radial coordinate, and the vertical axis is the longitudinal symmetry axis of the cavity and cylindrical ring stack. Only one half of the cavity/sample (in the radial direction) is shown.

Figure 14 shows measured values of Q as a function of I_{sol}. Resonant frequencies of the cavity range between 78 and 121 MHz. The significant increase in power loss at currents below 35 A can be attributed to onset of gyromagnetic resonance somewhere in the sample. Power losses in the cavity are resistive (copper), dielectric ($\tan\delta_\epsilon$) and magnetic ($\tan\delta_m$). The resistive losses can be calculated without difficulty since the conductivity of copper is well known. National Magnetics has supplied a measurement of $\tan\delta_\epsilon = 0.0001$.

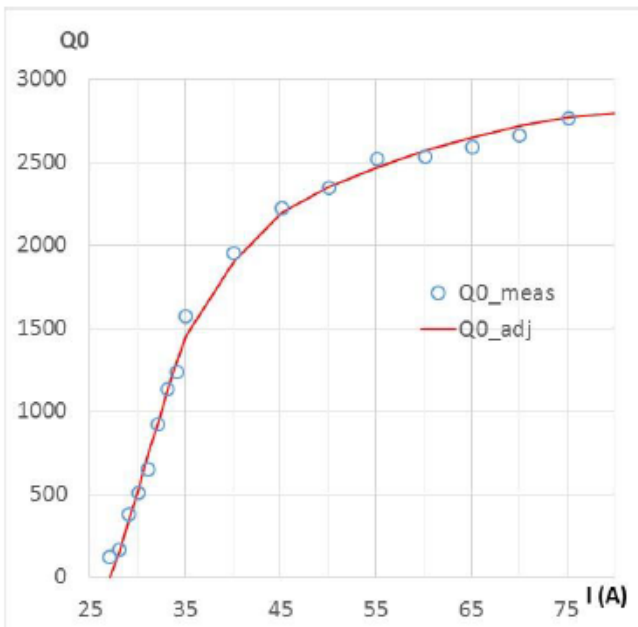

Figure 14: The measured Q of the resonator as a function of I_{sol}.

Magnetic power losses are traditionally characterized by the loss coefficient [19]. Since $\alpha \ll 1$, neglecting terms proportional to α^2:

$$\tan\delta_m = \frac{\mu'}{\mu''} = \frac{\alpha\omega\omega_M(\omega_0^2+\omega^2)}{(\omega_0^2-\omega^2)(\omega_0^2-\omega^2+\omega_M\omega_0)} \tag{1}$$

where ω is the frequency of interest, $\omega_0 = \mu_0\gamma H_0$ is the precession frequency for a given bias magnetic field, H_0, in the material, $\gamma = e/m_e$ is the gyromagnetic ratio, $\omega_M = \mu_0\gamma M_s$, and M_s is the saturation magnetization. For AL800, $\mu_0 M_s \approx 0.08$ T or 800 G.

The expression in Eq. (1) is accurate when $\omega_0 \gg \omega$, and this imposes a lower limit on H_0. Assuming that this requirement is satisfied, for a material with properties parameterized by ω_m at a point with field given by ω_0, and RF frequency ω, the loss tangent is proportional to α. It is unclear as to whether α itself has a dependence on the bias magnetic field. Some sources argue that it is a constant [19] while others dispute this [20].

Values of α for the AL800 sample were determined for each value of I_{sol} by adjusting its value in the model until the model predicted the same values for Q and frequency that were seen in the data.

Copper and dielectric losses are easily calculated by simulation. Inputs to the simulation were manufacturer measured values of dielectric constant $\epsilon = 13.8$, $\tan\delta_\epsilon = 0.0001$, and $4\pi M_s = 764$ G. In addition, the static permeability curve described in the previous section was used. Results are shown in Figure 15. The sharp rise of α at low currents can be explained by either (a) the onset of the resonant condition in some (initially small) parts of the sample or (b) that α has a dependence on the field or frequency. With the relatively low excitation current in the current experimental setup, the local power loss can be orders of magnitude higher than the averaged one. Results can be trusted only for the cases were resonance is nowhere within the material, i.e. when $I_{\text{sol}} \geq 40$ A.

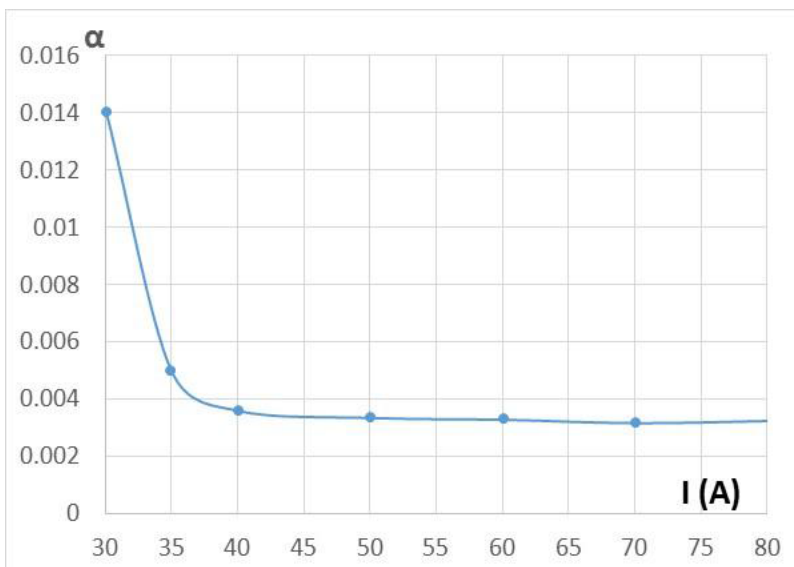

Figure 15: Extracted value of the loss coefficient α as a function of solenoid current. The rise at lower currents is likely due to an onset of gyromagnetic resonance.

As an initial assumption, α (used in Eq. (1) to calculate $\tan\delta_m$) was accepted to be constant over a wide range of frequencies, with $\alpha = 0.0033$. This assumption will be verified later by direct measurements.

For a comparison, α can also be calculated using the following formula with the line width data, $\Delta H = 24$ Oe, supplied by the vendor

$$\Delta H = \frac{2\alpha\omega_0}{\mu_0\gamma} \tag{2}$$

The above gives $\alpha = 0.0036$. Thus the vendor's α agrees to within 10% of the α found in these measurements.

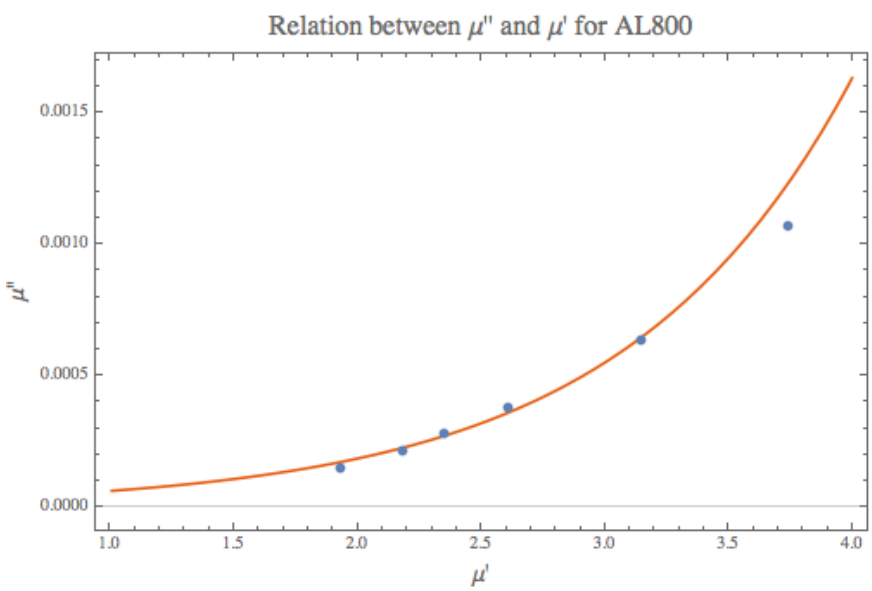

Figure 16: The relationship between μ'' and μ' for AL800.

Given the above-mentioned onset of gyromagnetic resonance, the biasing field equipment for devices that contain garnets should be designed to avoid field non-uniformity and the resulting onset of this resonance. Taking this into consideration, a more refined setup for permeability measurements has been built. This has been used to measure parameters of witness samples of the material that will be used in the 2nd harmonic cavity. See section 16.1. In addition, a test system (a cavity and a bias magnet) has been used to perform measurements on the actual garnet rings that will be used in the cavity. See section 16.2.

More details can be found in Ref. [17].

Furthermore, from the damping constant α, the μ'' as a function of μ' curve can be generated. The result is shown in Figure 16. This curve is how the losses in the garnet of the transmission line model of the cavity, discussed in section 6.1, is calculated. The non-linear least squares fit to the measured data n that relates μ'' to μ' is

$$\mu'' = 0.211 \times 10^{-4} e^{1.088\mu'} \tag{3}$$

4 Measuring the loss tangent of Stycast epoxy (R. Madrak & I. Terechkhine)

It was decided to use Stycast 2850FT with Catalyst 9 [21] to join the sectors of AL800 to form a ring, and to attach the AL800 rings to the alumina cooling rings. The manufacturer specifies the dielectric constant as 5.01 and the dissipation factor as 0.028 at 1 MHz. It was necessary to measure the loss factor in the frequency range at which the harmonic cavity will operate.

A 76 MHz quarter wave resonator was constructed from standard 3-1/8″ transmission line. A 2″ thick ring of epoxy with an OD/ID of ~3″/1.375″ was made to fit into the end of the resonator. A model of the setup is shown in Figure 17. The Q was measured with and without the epoxy sample. Without epoxy, Q was 1628, though the simulation predicted 2342. The conductivity of copper in the simulation was scaled down until the measured and simulated values of Q with no epoxy agreed. An analytical approximation of Q resulted in tan $\delta_e = 0.017$. This value was then used in the simulation with epoxy, in which case the measured and simulated values were 235 and 230. The conclusion was tan $\delta_{e\varepsilon}$ from this measurement is 0.017, substantially smaller than the vendor's value of 0.028 at 1 MHz. As a check of the sensitivity, the value of tan $\delta_{e\varepsilon}$ in the simulation was increased to 0.03, in which case the simulation predicted Q = 138.

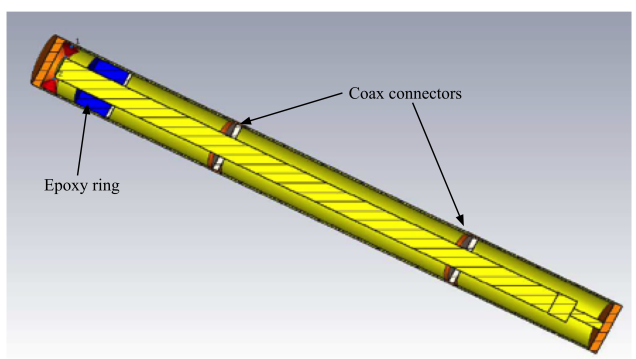

Figure 17: A sketch of the 76 MHz quarter wave resonator made from 3-1/8″ transmission line. The measurement of tan δ_ε for a 2″ thick ring of epoxy, and no garnet was done in this setup.

5 Measuring the loss tangent and dielectric constant of thermal grease (R. Madrak)

To make good thermal contact between the garnet-alumina rings and the outer and inner conductors of the cavity, thermal grease will be used. This is crucial because heat is removed by cooling lines on the outer and inner conductors. In addition, the grease will fill in small air gaps which could enhance the local electric field and cause sparking. The same grease will also be used between rings for the latter reason.

The grease that was chosen is MG Chemicals® Super Thermal Grease II 8616 [22]. The grease has a base of synthetic oil, and its principal components are aluminum oxide and zinc oxide. Values quoted in the technical data sheet for the dielectric constant were 6.77 and 6.69 at 1 and 10 kHz, respectively. At these frequencies, the dissipation factor is 0.01.

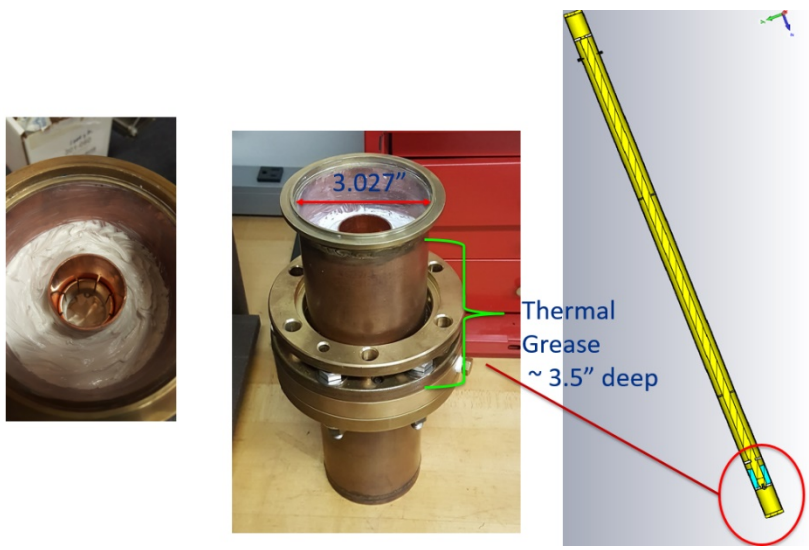

Figure 18: The half-wave resonator containing the thermal grease.

The properties of the grease were measured at low (kHz) frequencies, and also in the MHz range. In the first measurement, a half resonator was constructed from standard 3-1/8" transmission line. Thermal grease was added to a section of the line as shown in Figure 18. The frequency and Q of the resonator were measured with a network analyzer (S21). The setup was simulated in CST Microwave Studio. First, the conductivity of the metal outer and inner conductors was tuned so the Q values of the empty resonator matched in simulation and data. Using the tuned value for the conductivity, the setup with grease was simulated. The dielectric constant was tuned in the simulation the make the frequencies match in data and simulation, and then tan was tuned to make the values of Q match. The

resonant frequencies with and without grease were ~68 and 59 MHz, respectively. The values obtained for ε and $\tan\delta$ were 5.2 and 0.03. These were not what was given by the data sheet at lower frequency, but still considered acceptable given the relatively thin layer of grease that is expected to be used.

The value of ε was also measured at lower frequency by measuring the capacitance of a layer of grease sandwiched between two metal plates. The distance between the plates was maintained using small G10 spacers, and the capacitance was measured using a HP4263 LCR meter with and without the grease. The value of ε was obtained from the ratio of these two measurements, after correcting for the presence of the G10. The values obtained were between ~5.8 and 5.5 for 100 Hz to 100 kHz, which were again considered acceptable, though they did not agree well with specifications quoted in the data sheet.

6 Modeling the cavity

The simulations can be divided into two major parts: those that were done using a transmission line (TL) model and those that were done using a MWS model. Although MWS is the final arbiter on the behavior of the cavity, the TL model serves as a sanity check of the MWS results. Another advantage of the TL model is that calculating the results from any change in the model is relatively fast compared to MWS and thus besides serving as a sanity check, it also guides changes to the MWS model for it to achieve the desired cavity characteristics shown in Table 2.

6.1 The transmission line model (C.Y. Tan & R. Madrak)

The TL model that we have used in our *Mathematica* [23] calculations is shown in Figure 19. This is a simplified model of the MWS model shown in Figure 8 and described in section 6.2. A more complex Advanced Design System (ADS) [24] TL model has also been made, but the results are essentially the same when compared to the model shown here. And thus, we will only talk about the simplified TL model here. The ADS model is described in section 6.1.3.

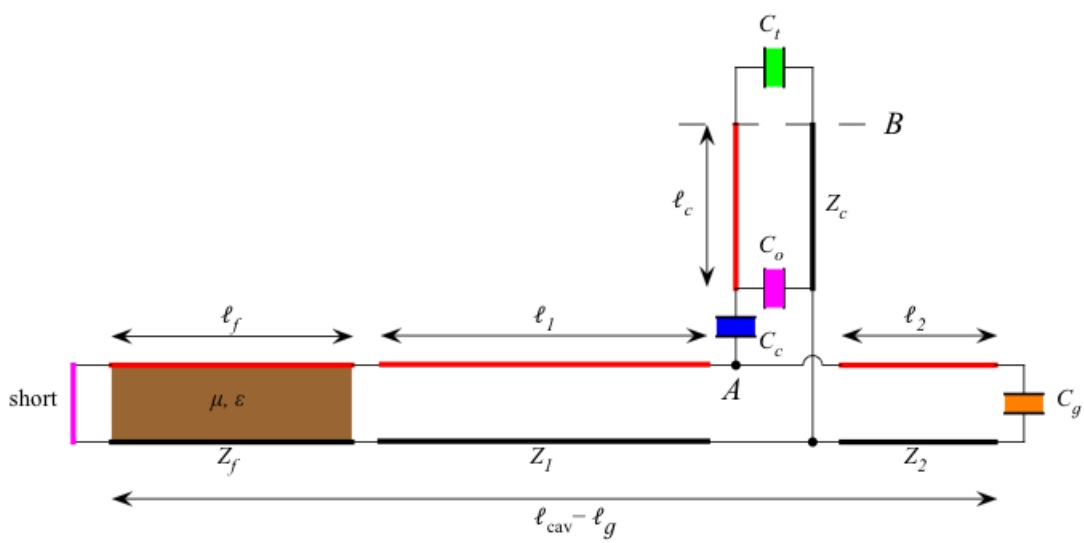

Figure 19: The TL model of the 2nd harmonic cavity.

The TL model is shown in Figure 19. Going from left to right, we will discuss the approximations that we have used in this model which are:

1. We have ignored the Al_2O_3 cooling plates that are sandwiched between the garnet rings, i.e. our model assumes a continuous cylinder of garnet material.

2. We have ignored the neck between the garnet and the main body of the cavity.
3. We have ignored the taper of the power module and approximated it as a uniform cylinder.
4. We model the Y567B as a capacitor $C_t = 60$ pF. C_t is the output capacitance of the Y567B in the grounded grid configuration.
5. C_o is the sum of the outer capacitance between the coupling capacitor and the outer wall of the transmission line and the capacitance of the RF window between the power module and the cavity.
6. We have neglected the impedance of the stem that connects power module to the coupling capacitor.

Parameter	Value	Units
Garnet part		
inner radius of transmission line r_{fi}	170	mm
outer radius of transmission line r_{fo}	105	mm
Vacuum part		
l_1	291	mm
l_2	100	mm
inner radius of transmission line r_i	45	m
outer radius of transmission line r_o	125	m
Power module		
l_c	339.2	mm
inner radius of transmission line r_{ci}	100.85	mm
outer radius of transmission line r_{co}	203.2	mm
Capacitors		
gap capacitance C_g	2.9	pF

coupling capacitance C_c	8.0	pF
outer capacitance C_o	4.5	pF
anode capacitance C_t	60	pF
Power module RF window capacitance	3.4	pF
relative permittivity of garnet	14.4	-
dielectric loss tangent $\tan\delta_e$	0.0001	-

Table 3: The parameters of the TL model.

A summary of the parameters of the used in the TL model that come from the MWS model discussed in section 15 are shown in Table 3. Notice that the length of the garnet l_f is not in Table 3 because we have varied this length to get the cavity to resonate at 76 MHz when $\mu = 3.5$. Our optimization found that $l_f = 112.46$ mm.

Using this length and the parameters in Table 3, we can calculate various cavity parameters of interest. These parameters are plotted in the next section.

6.1.1 Plots

We show in Figure 20 the frequency range of the cavity as a function of permeability of the garnet. It is clear from this figure that the TL model covers the required frequency range for $1.25 < \mu \leq 3.5$.

The shunt impedance[4] as a function of the resonant frequency calculated with the TL model is shown in Figure 21. We can calculate R/Q of the cavity using the shunt impedance and the following formula that we will derive in Appendix B

$$R/Q = 2\left(\omega_0 \frac{dB}{d\omega}\bigg|_{\omega=\omega_0}\right)^{-1} \tag{4}$$

[4] We will use the RF engineer's definition of shunt impedance throughout this report rather than the accelerator physicist's definition of shunt impedance. See Appendix A for an explanation of the differences between the two definitions.

where B is the imaginary part of the admittance of the parallel RLC circuit model of a resonator and ω_0 is the angular resonant frequency of the circuit. The R/Q of the TL model is shown in Figure 22. Once we have R/Q, we can calculate the Q of the cavity and the result is shown in Figure 23. From this figure, we can see that at low frequencies, the garnet dominates the losses, while at high frequencies, the losses are dominated by the copper part of the cavity.

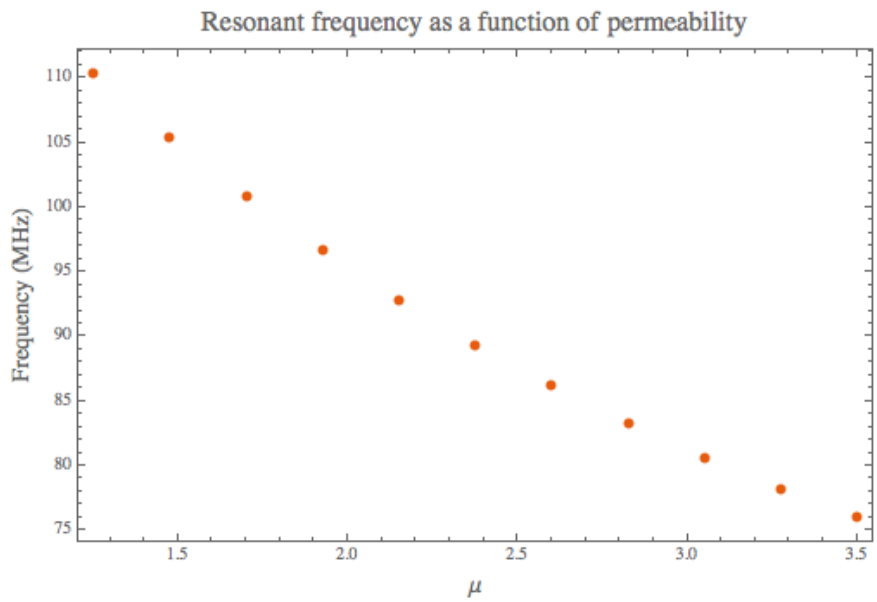

Figure 20: This figure shows the resonant frequency as a function of permeability. The cavity clearly covers the required frequency range.

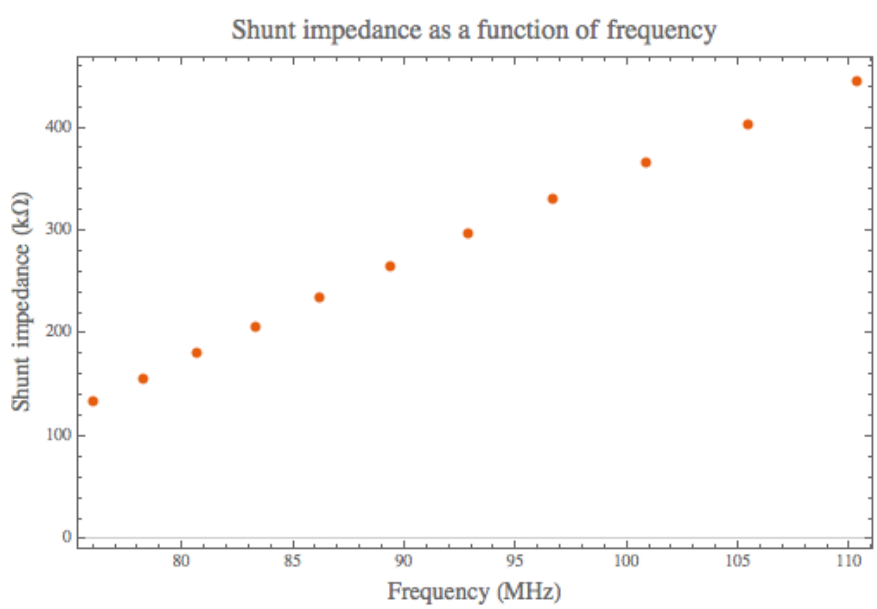

Figure 21: This is the shunt impedance of the TLM model cavity as a function of its resonant frequency.

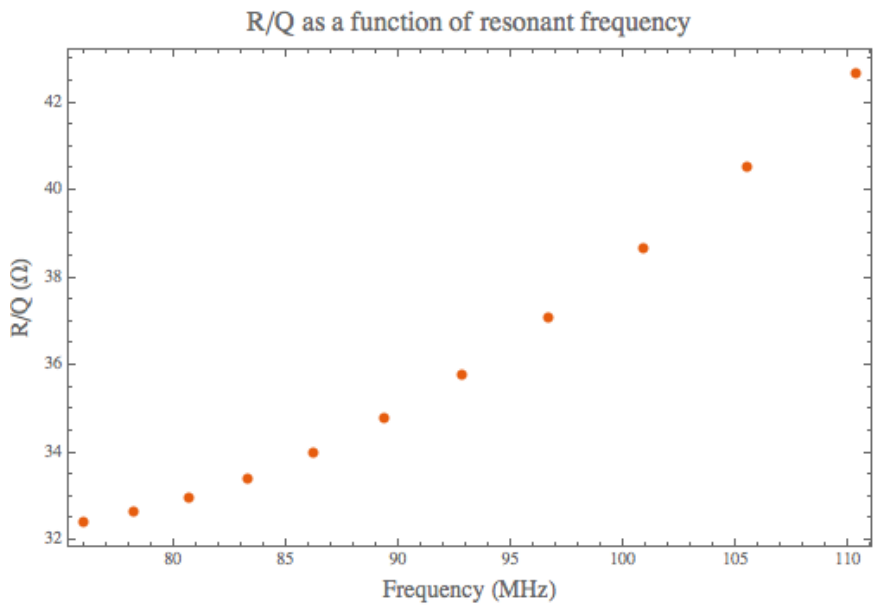

Figure 22: R/Q of the TL model cavity.

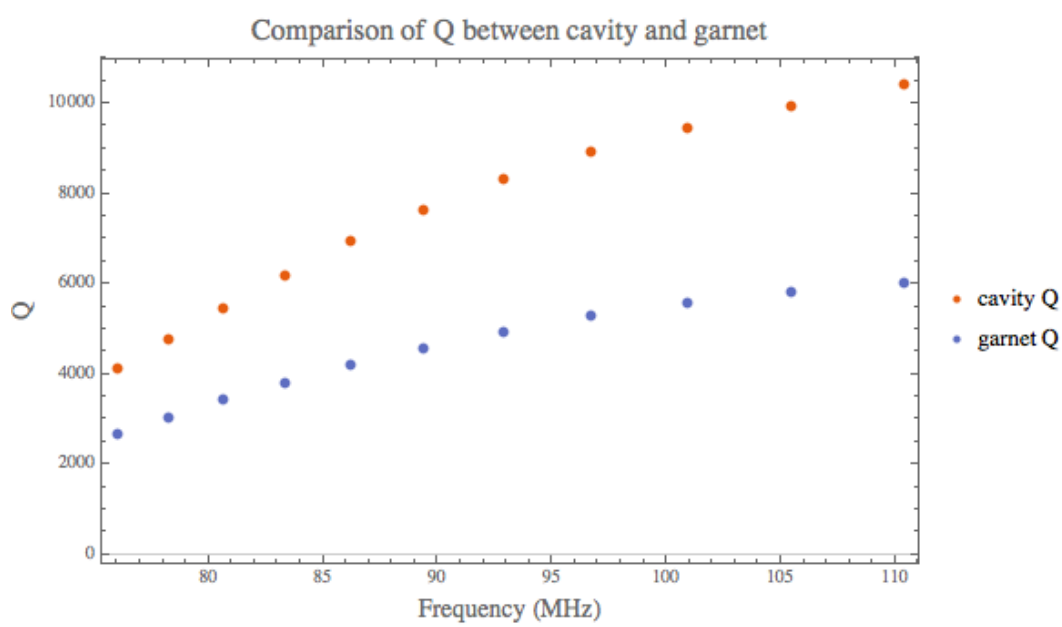

Figure 23: The Q of the TLM cavity and the garnet is shown here. At low frequencies, the losses in the cavity is dominated by the garnet while at high frequencies, it is dominated by losses in the copper.

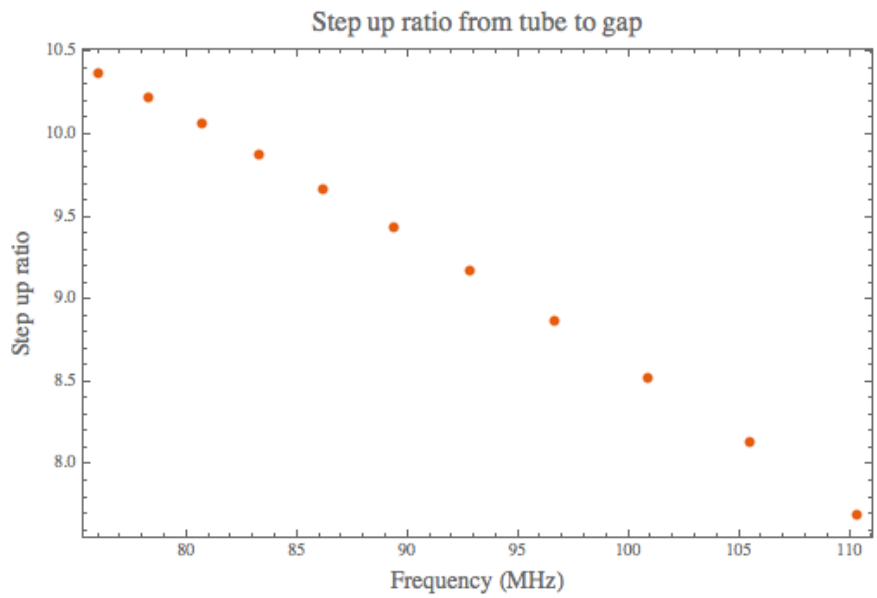

Figure 24: The step up ratio as a function of resonant frequency.

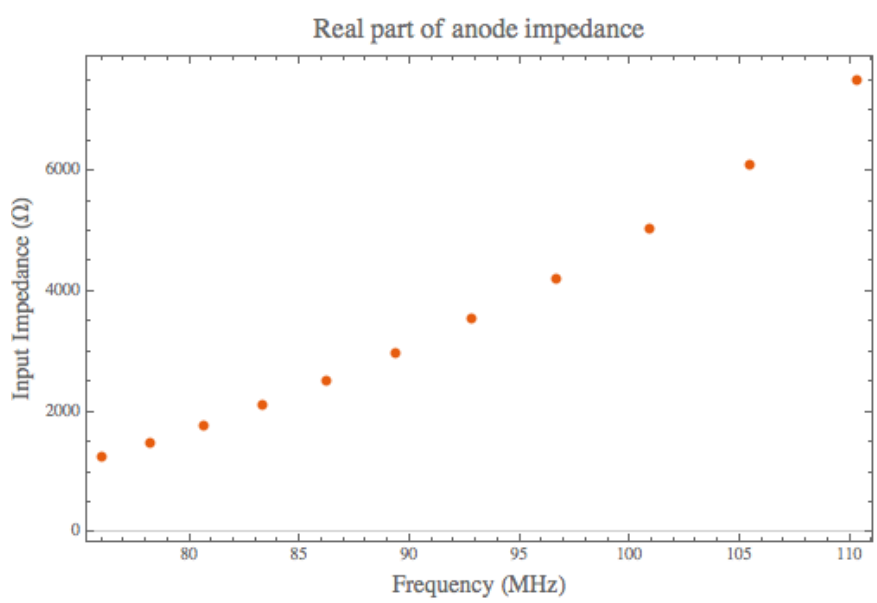

Figure 25: The impedance seen by the tube as a function of resonant frequency.

The step up ratio of the cavity is shown in Figure 24. We define the step up ratio to be $V_{\text{gap}}/V_{\text{anode}}$, where V_{gap} is the voltage across the accelerating gap and V_{anode} is the voltage at the power input of the cavity, marked with "B" in Figure 19.

The impedance seen by the anode of the tube, shown in Figure 25, is an important parameter because it determines whether the cavity can be driven by the Y567B. We can see that the TL model predicts that the anode impedance $>$ 1.3 kΩ for the entire frequency range of interest. The determination of the tube efficiencies will be discussed in section 7.2.

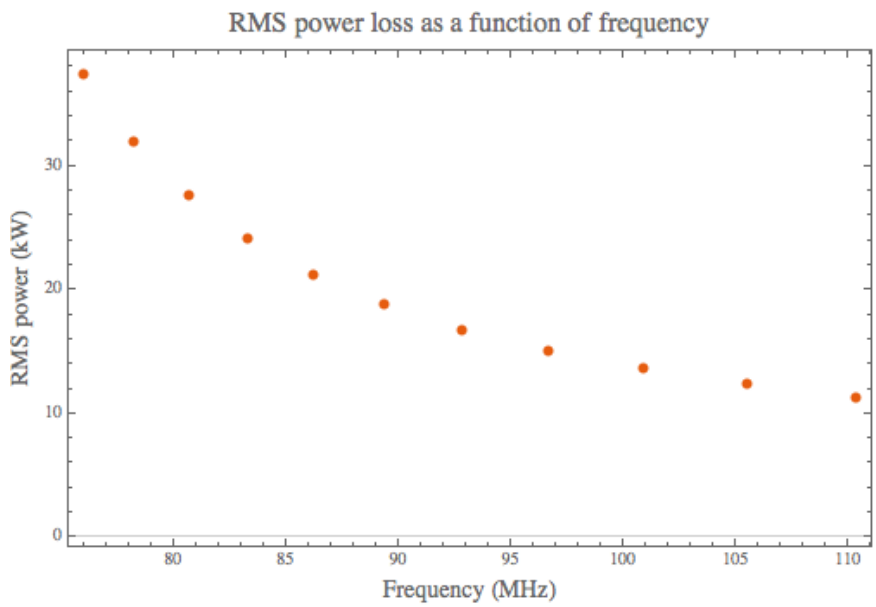

Figure 26: The rms power loss of the TL model cavity assuming a 100 kV gap voltage.

The rms power loss in the cavity assuming a 100 kV gap *peak* voltage is shown in Figure 26. We constructed this figure using the gap peak voltage and the shunt impedance of the cavity shown in Figure 21. At low frequency, most of the power is lost in the garnet (See Q plot in Figure 22) while at high frequency most of the power is lost in the copper.

6.1.2 Power module

The power module is capacitively coupled with C_c to the cavity at point "A" shown in Figure 19. At the end of the power module transmission line is a capacitor, C_t, which is used to model the Y567B tube. C_t is the output capacitance of the tube. The power module structure will resonate by itself and thus when it is coupled to the cavity resonator there are two normal modes (and their harmonics) in the structure. The natural resonant frequency of the module alone in this case is ~200 MHz and it is

sufficiently far away from the natural frequency of the cavity in the required $\mu < 3.5$ range that the power module itself does not resonate and take away power from exciting the accelerating gap.

6.1.3 ADS model

The ADS model of our cavity is shown in Figure 27. It is a more detailed transmission line model than the TL model shown in Figure 19. The main improvements in the ADS model that we have made over the TL model are the inclusion of the tapers and the Al_2O_3 garnet stack. We model the taper by joining transmission lines that have successively smaller radii to mimic the taper. Despite adding in the details, we have found that the results from the ADS model and the TL model give nearly the same results, and thus all the essential physics are captured with the TL model.

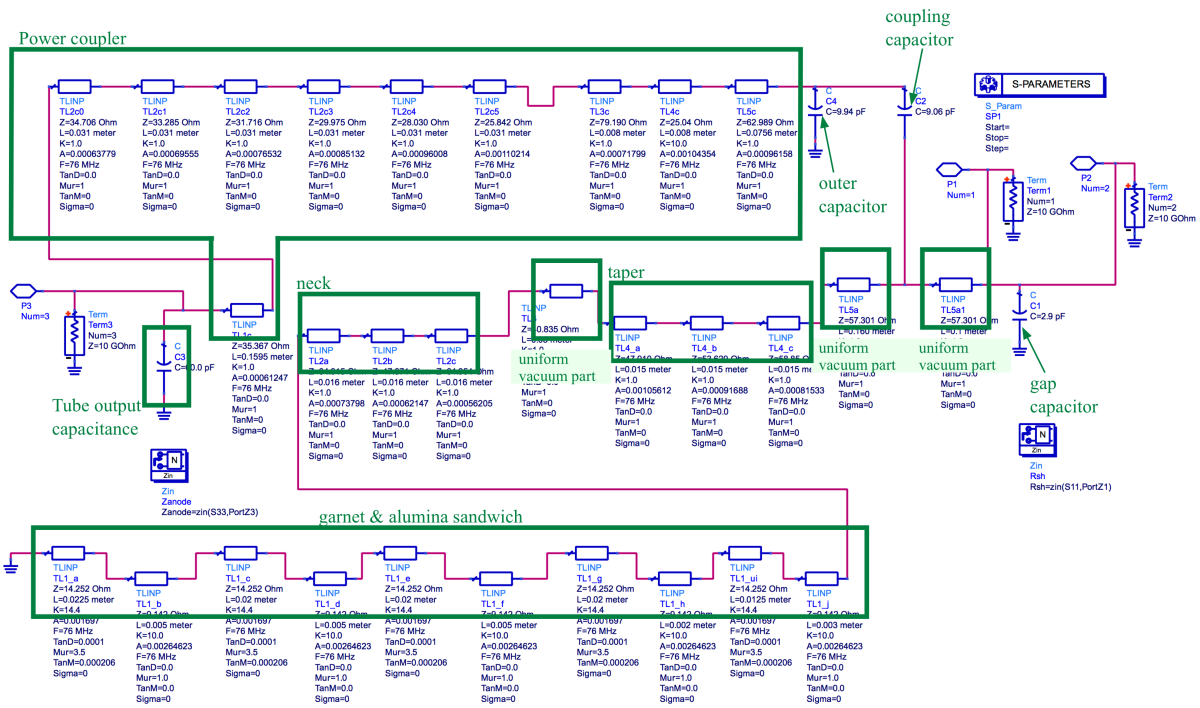

Figure 27: The ADS model of our cavity. It is a much more detailed transmission line model.

6.2 The CST Microwave Studio model (G. Romanov)

The CST Microwave Studio model of the 2nd harmonic cavity has gone through many iterations. The first model simply scaled the dimensions of the TRIUMF KAON cavity [6] to get the required frequency range of 75.7 MHz to 105.6 MHz. The final model shown in Figure 28 took into account the measured properties of the garnet, solenoid field, power amplifier (PA) and the higher order mode (HOM) cavity. In this section, we will only summarize the results that are not covered in the later chapters. The evolution of the model can be found by reading the presentations given in the fortnightly meetings on http://beamdocs.fnal.gov/AD-public/DocDB/DocumentDatabase (search for `2nd harmonic`).

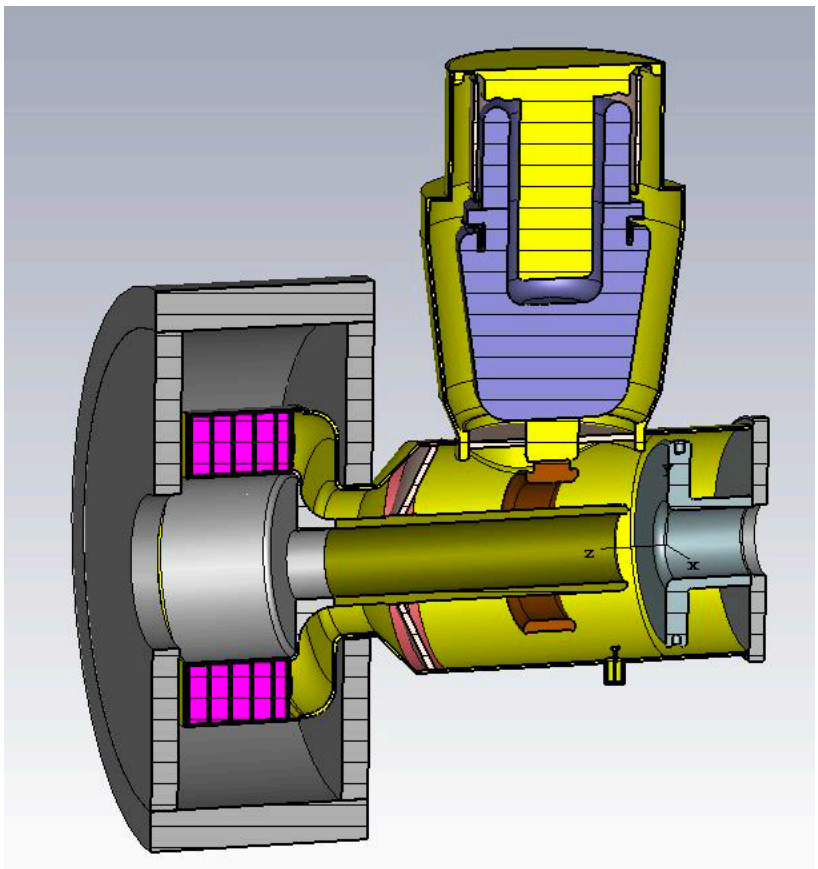

Figure 28: The final MWS model that includes every component.

6.2.1 Power amplifier model

We define the power module (shown in Figure 8) to be the part that contains the PA and the shell that houses it. The PA is capacitively coupled to the accelerating cavity with a ring. The power module of the 2nd harmonic cavity is strongly coupled to the accelerating cavity and thus any changes to the power module strongly affects the RF characteristics of the cavity. In fact, due to the strong coupling, the power module and the accelerating cavity cannot be considered as two separate entities and must always be treated as a multi-modal resonant structure in all optimizations.

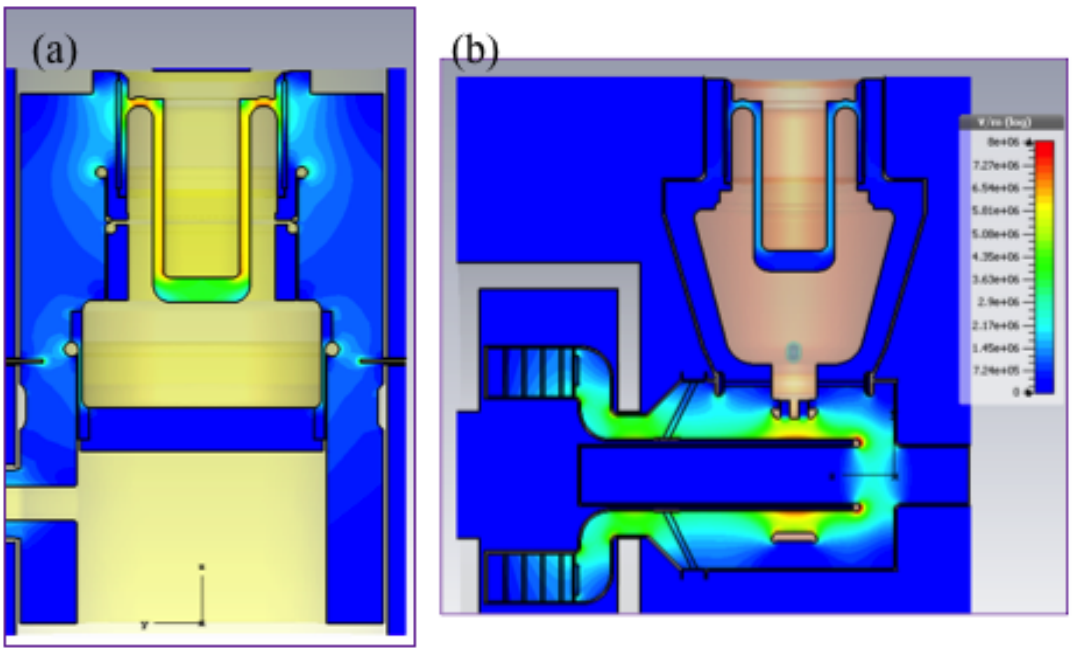

Figure 29: These pictures show the E-fields when the PA installed in (a) the PA test cavity and (b) the 2nd harmonic cavity.

Our early simulations simply modeled the PA as a 60 pF capacitor. This proved to be insufficient because the RF characteristics of cavity are very sensitive to the shape and length of the power module. Small changes to the dimensions of the shell to accommodate water pipes and electrical connections have non-trivial RF consequences. Therefore, a good MWS model of the PA was made so that it could be synchronized with the mechanical model. This meant that we could verify that any mechanical changes would not have detrimental effects on the RF characteristics. In order to assure ourselves that the PA model was done correctly, it was verified by checking that the resonant frequency that MWS found for the PA test cavity (see section 14) was the same as the measured one [25]. Figure 29 shows the PA model installed in both the test cavity and the 2nd harmonic cavity.

We also studied where the simulation port should be placed in the PA model so that the anode impedance can be calculated. Our studies (See references [26, 27]) showed that the exact location of the port within the PA was not critical for evaluating the value of the anode impedance. We chose the port location shown in Figure 30.

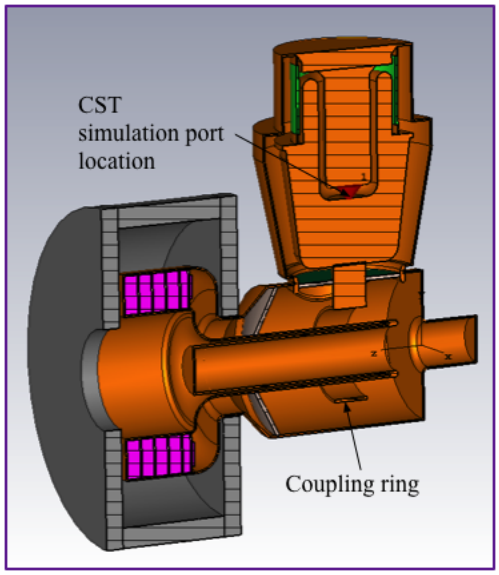

Figure 30: Location of CST simulation port in PA and the coupling ring.

6.2.2 Capacitive coupling ring

The capacitive coupling ring, shown in Fig 30, couples the power from the PA to the accelerating cavity. It is necessary to properly shape the coupling ring so that sparking does not occur. The screws that hold the coupling ring to the stem are recessed as well so that the fields are always below the Kilpatrick and W. Peter *et al* limits [28]. The limits in the frequency range from DC to 100 MHz are shown in Figure 31. From this plot, we will limit the surface fields to between 10 and 12 MV/m (or 100 kV/cm and 120 kV/cm). This is a very conservative limit because from the experiments that were conducted by W. Peter *et al*, they showed that the surface fields can be a factor of 2 higher before surface breakdown occurs.

The surface fields calculated by MWS after appropriately shaping the coupling ring and the edge of beam pipe at the accelerating gap are shown in Figure 32. The maximum surface field on the coupling ring is less than 59 kV/cm and on the beam pipe at the accelerating gap is less than 66 kV/cm. These two values are much less than the surface field limits and thus should not present sparking problems.

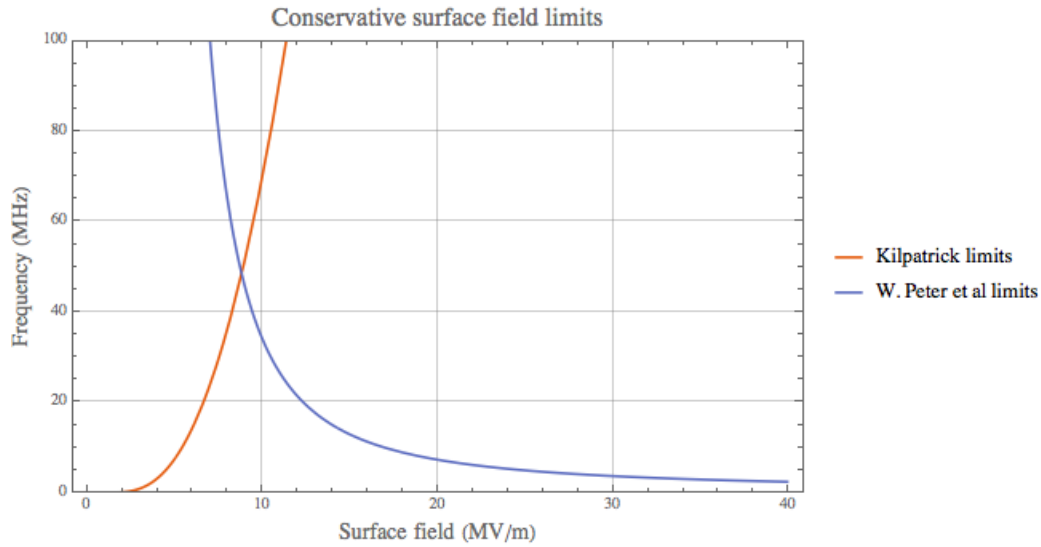

Figure 31: The curves show the conservative limits for surface fields. The limits for our cavity are between 10 to 12 MV/m.

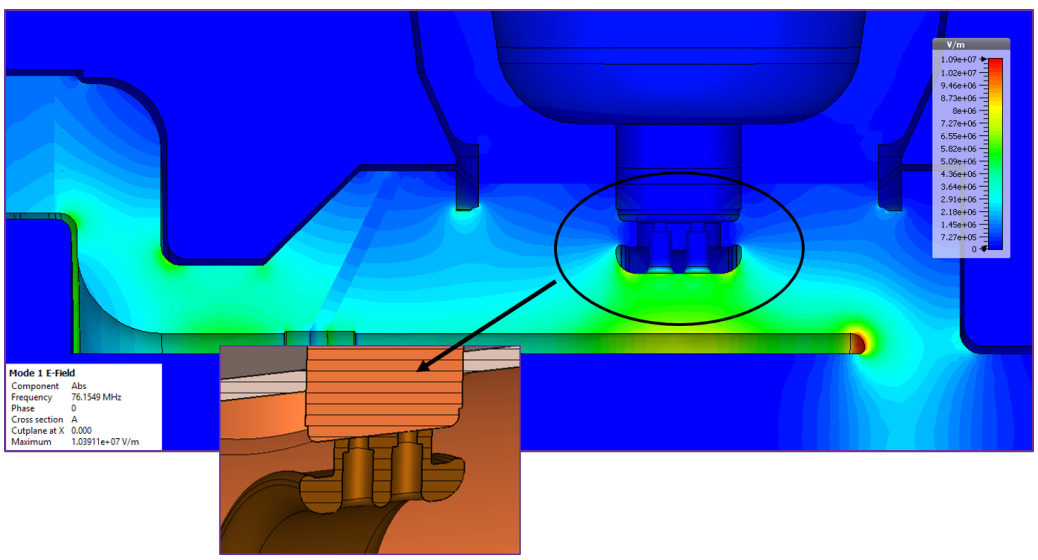

Figure 32: This is the E-field distribution in the cavity. The areas of concern are at the coupling ring and the beam pipe edge of the accelerating gap. The zoomed in view shows how the ring is connected to the stem via recessed screws.

6.2.3 Field probes

A pair of field probes will be placed near the accelerating gap. These field probes will be placed orthogonally at the gap. The locations of these probes will give 10 V when the gap voltage is 100 kV. There is minimal effect on the resonant frequency with the addition of these probes [29]. The probe is made from a Type-N connector [30] and a button. See Figure 33.

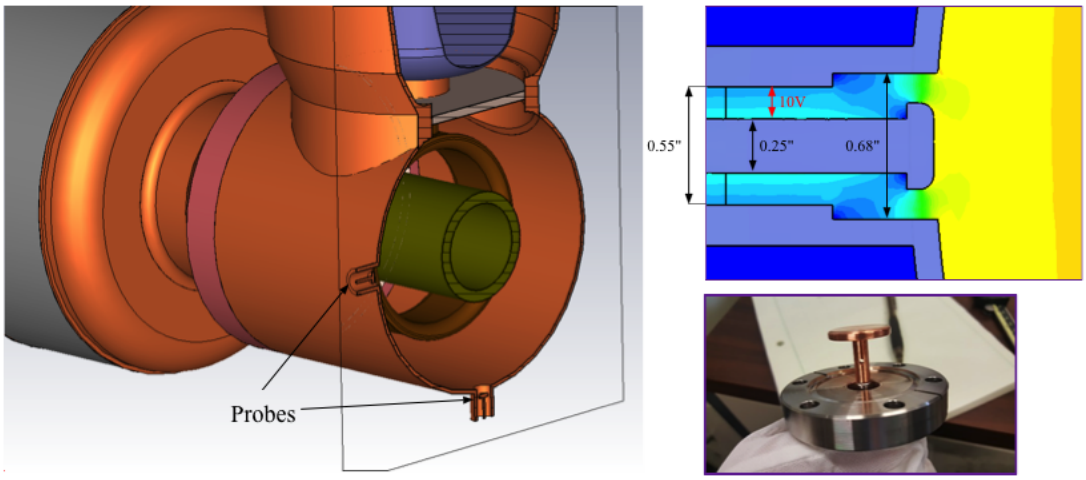

Figure 33: The field probes near the accelerating gap. An example of a field probe used in the Recycler cavity is shown on the bottom right. The button will be smaller in our cavity.

6.2.4 Calculated RF parameters

The RF parameters that MWS calculated for the cavity are shown in Figure 34 and Figure 35. These values will be used in the subsequent analysis of the cavity power requirements. These curves came from the MWS calculations dated 22 May 2017, MWS model file `2Dto3D_FD_CutOff_20170509`. The DC part of the solenoid current is 745 A into 11 solenoid turns which keeps the cavity at the injection frequency of 75.7 MHz at all times. The AC part of current ramps the solenoid to produce the magnetic field necessary to bias the tuner for higher frequencies. **Editor's note: The results here assume that the solenoid is divided into a DC coil with 11 turns and an AC coil with 48 turns. The actual operation of the solenoid will have all 59 turns connected in parallel.**

Note: The Engineer's definition of the shunt impedances are used here. See Appendix A .

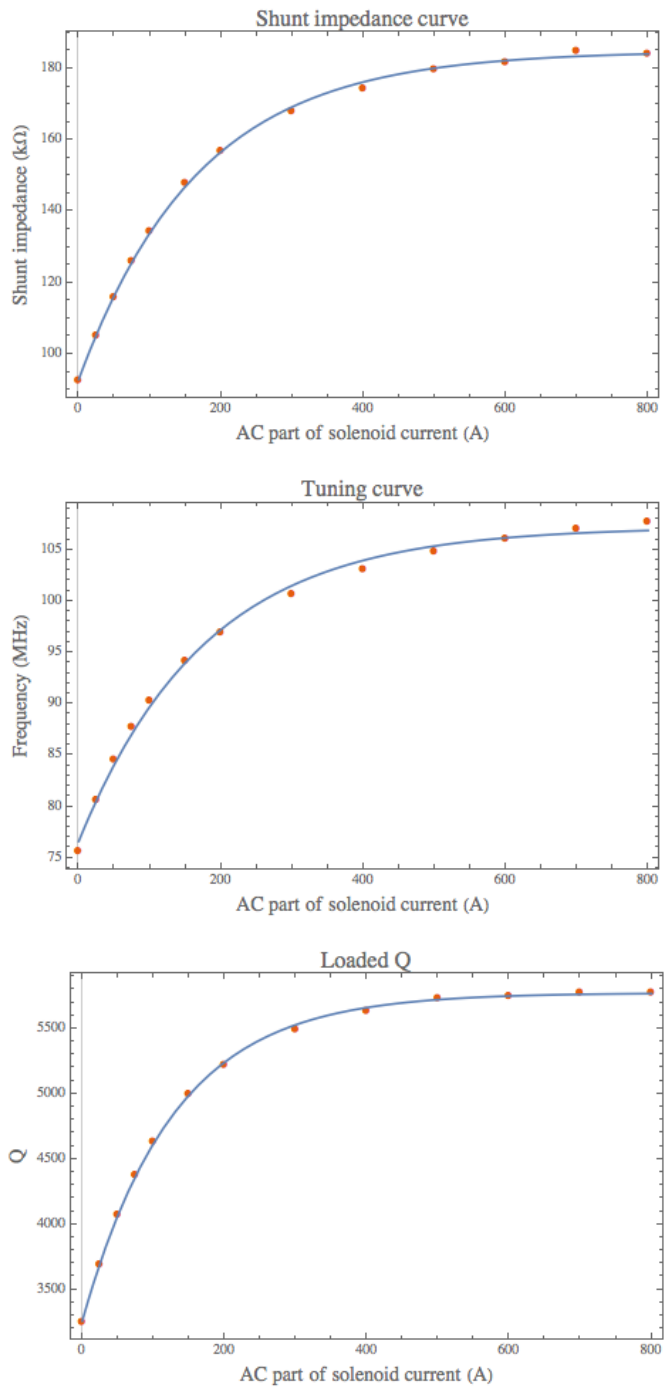

Figure 34: The shunt impedance, resonant frequency and loaded Q as a function of the solenoid current going into 48 solenoid turns.

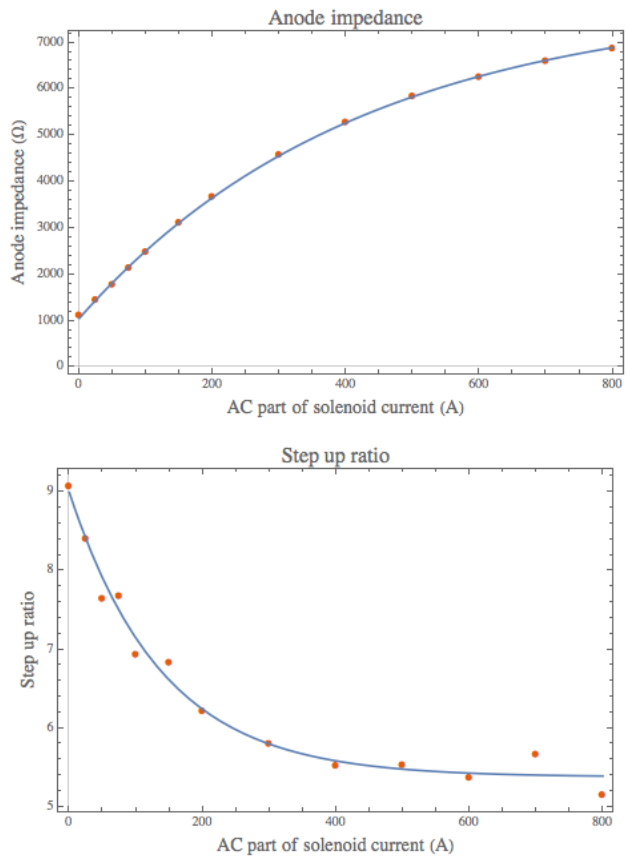

Figure 35: The anode impedance and the step up ratio.

7 HOM damper

The HOM (higher order mode) damper is an important part of the cavity design to lower the HOM modes of the cavity so that they do not become the source of beam instabilities. The HOM damper design is a modification of the Smythe style HOM damper cavity [16] that was used in both the TRIUMF cavity and the SSC [31] LEB cavity. The damping characteristics of the HOM damper have been calculated with a semi-analytic approximation and with MWS. Both methods are presented here. The goal is to have the higher order modes have impedances less than 2 kΩ. (This is very conservative and there are more than 20 cavities.)

7.1.1 Semi-analytic approximation (C.Y. Tan)

This semi-analytic approximation of the Smythe style damper cavity comes from Smythe [16] and Paramonov [32]. The reasons for using the semi-analytic approximation are that

1. Quick optimization of the geometry of the damper cavity.
2. Superfish [33] does not have the capability of calculating the effects of a resistive load.

Figure 36 shows the cavity + HOM damper cavity approximation. The cavity impedance is Z_1, Z_2 is the impedance of the HOM damper cavity, C is the gap capacitance, R is the load resistor, and I_b is the beam current. Z_g is the total impedance from the R, C and Z_2 contributions.

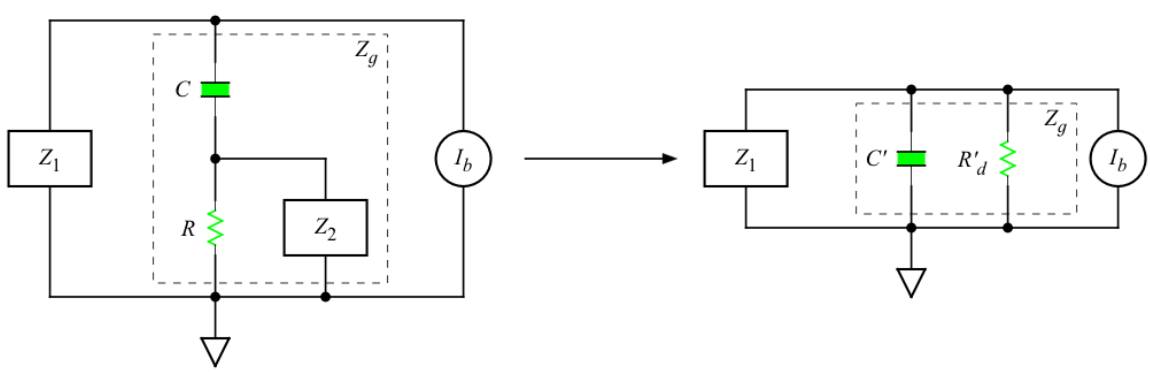

Figure 36: On the left is the cavity+HOM damper equivalent circuit. The symbols are explained in the text. On the right is the Smythe approximation where he introduces the equivalent damping resistor R'_d.

Smythe then asserts that Z_g can be made to look like a circuit that consists of a new gap capacitor C' and a damping resistor R'_d in parallel. Again see Figure 36. Since C' and R'_d are in parallel, we have

$$\frac{1}{Z_g} = \frac{1}{R'_d} + \frac{1}{Z'_c} \quad \Rightarrow \frac{1}{R'_d} = \frac{1}{Z_g} - \frac{1}{Z'_c} \tag{5}$$

where $Z'_c = 1/i\omega C'$. But Z'_c is completely imaginary and R'_d is completely real and thus

$$R'_d = \frac{1}{\mathrm{Re}[1/Z_g]} \tag{6}$$

Since Superfish does not have the capability of calculating the effects of the load resistor, we have to use R'_d that was found in Eq. (6) to calculate the effect on the shunt impedance. This is what we will do below.

Now, since Superfish can calculate both the voltage V_g across the accelerating gap, i.e. across Z_g without any resistors, and the voltage V_d across the HOM cavity gap, i.e. at the same location where R will be attached, we can these values to relate R to R'_d. We do this by assuming that the damper resistor R only perturbs the voltage across the accelerating gap and the HOM cavity gap, thus we can assume that both V_g and V_d are the same with it is attached. When this approximation holds, we must have the rms power lost through R equal to the power lost through R'_d, i.e.

$$\frac{V_d^2}{2R} = \frac{V_g^2}{2R'_d} \tag{7}$$

Therefore, the relationship between R and R'_d is

$$R'_d = R\left(\frac{V_g}{V_d}\right)^2 \tag{8}$$

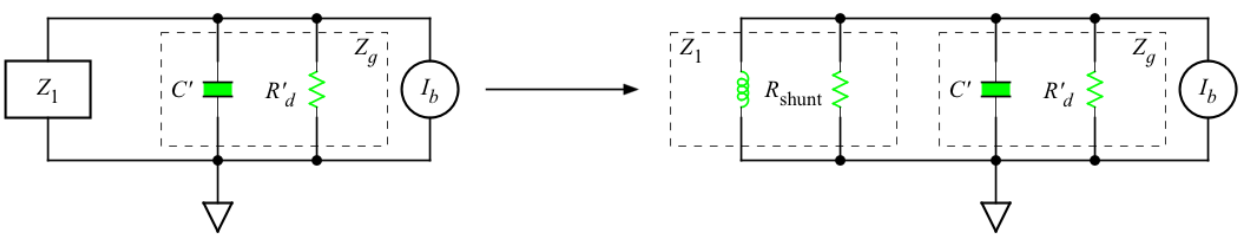

Figure 37: The cavity impedance Z_1 can be broken up into an inductance (and perhaps a capacitance as well) and the shunt impedance R_{shunt} that is the impedance without the HOM damper.

Finally, using Figure 37, we can calculate the shunt impedance R_{shunt} of the cavity without the HOM damper is in parallel with R'_d, the reduced shunt impedance of the cavity R'_{shunt} is simply given by

$$R'_{\mathrm{shunt}} = \frac{R_{\mathrm{shunt}} R'_d}{R_{\mathrm{shunt}} + R'_d} \tag{9}$$

7.1.1.1 Simple HOM damper

We have the required equations to calculate the shunt impedance of the cavity from the previous section after we calculate V_g and V_d for a given model from Superfish. We show the results of a Smythe style HOM damper cavity attached to the accelerating cavity shown in Figure 38.

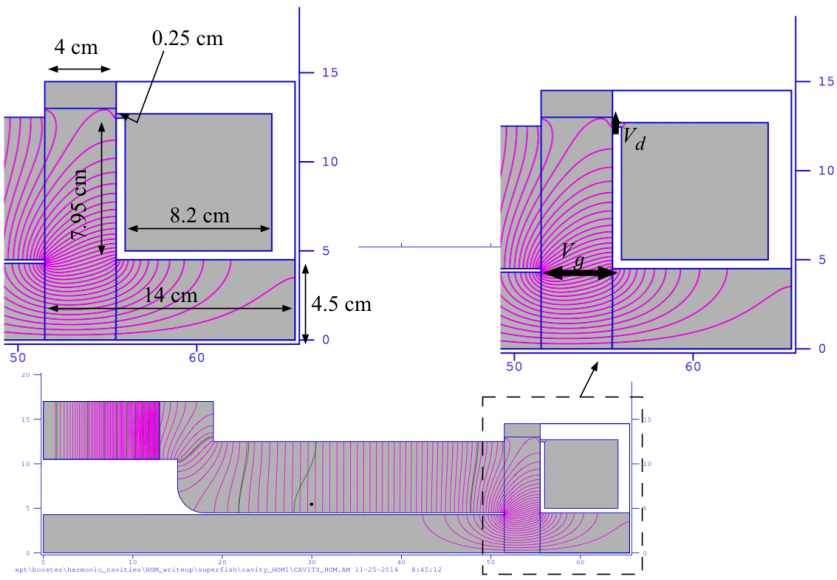

Figure 38: The accelerating cavity with a Smythe style damper cavity attached. The insets show where the voltages will be calculated and its dimension.

The dimensions of this simple HOM cavity are summarized in Figure 38. We point out that the HOM gap is ridiculously small at 0.25 cm. In the final design this gap will have to be optimized to give us the required impedance of each HOM.

When the load resistance $R = 50\Omega$, the HOMs of the accelerating cavity are damped. The results are quite good: although the impedance of the fundamental is reduced by 11% from 494 kΩ to 440 kΩ, the next higher harmonic, which has the highest impedance, is reduced by 93.3% from 228 kΩ to 1.6 kΩ. The comparison between the impedances with and without the HOM cavity is shown in Figure 39.

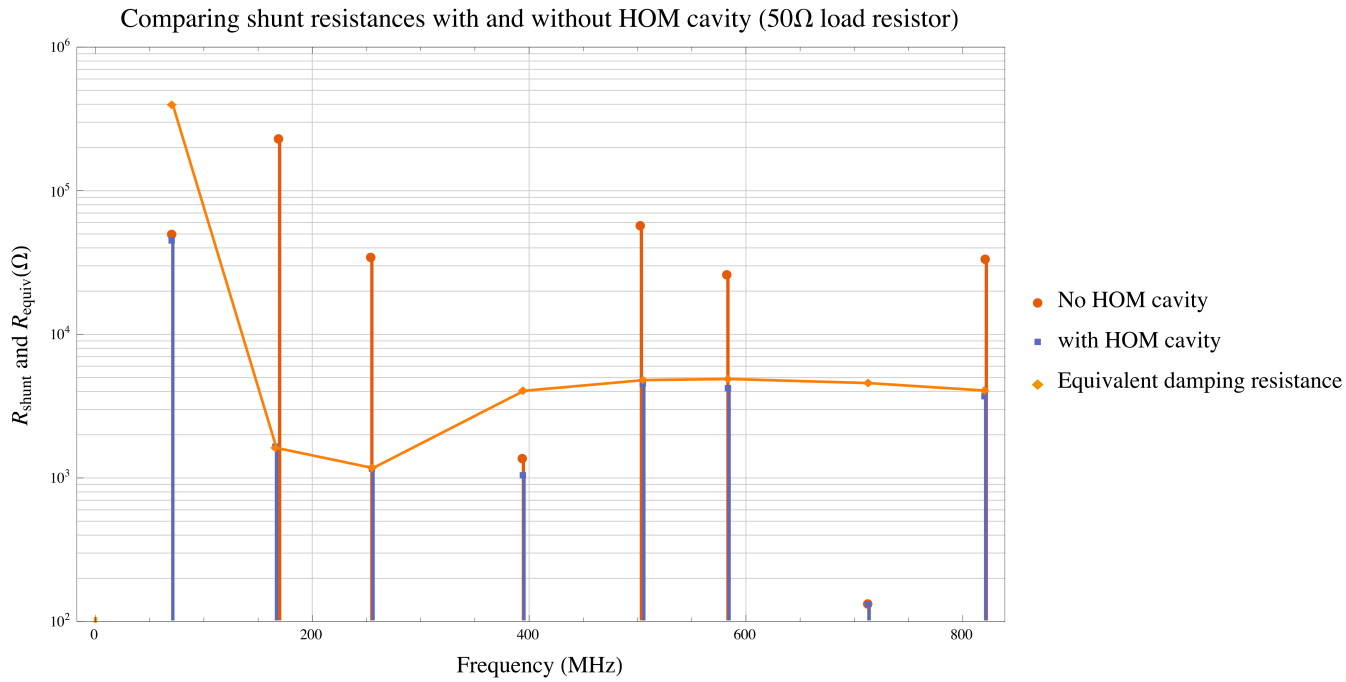

Figure 39: The shunt impedance of the cavity with and without the HOM cavity is shown here.

7.1.2 Microwave studio model (G. Romanov)

The MWS model of the HOM cavity connected to the accelerating cavity is shown in Figure 40. Using MWS, the HOM cavity dimensions were optimized to suppress the HOM modes while minimizing the effect on the fundamental. The initial HOM cavity dimensions came from the semi-analytic approximation discussed in the previous section. The optimized parameters are shown in Table 4 for a damping resistance of 21.875 Ω (Four 87.5 Ω resistors in parallel). In later MWS calculations, realistic resistor values are used: four 80 Ω resistors in parallel to give 20 Ω. Figure 40 illustrates the locations of these parameters.

Parameter	Description	Value (cm)
H_L	Cavity length	7.2
H_R_in	Inner radius	5.0
S_L	Coupling gap length	2.5
d_slot	Coupling gap width	1.0

S_R_in	See Figure 40	11.5
S_R_out	See Figure 40	12.5
H_R_out	See Figure 40	12.5
S_tip	See Figure 40	0.0

Table 4: The dimensions of the HOM cavity after optimization

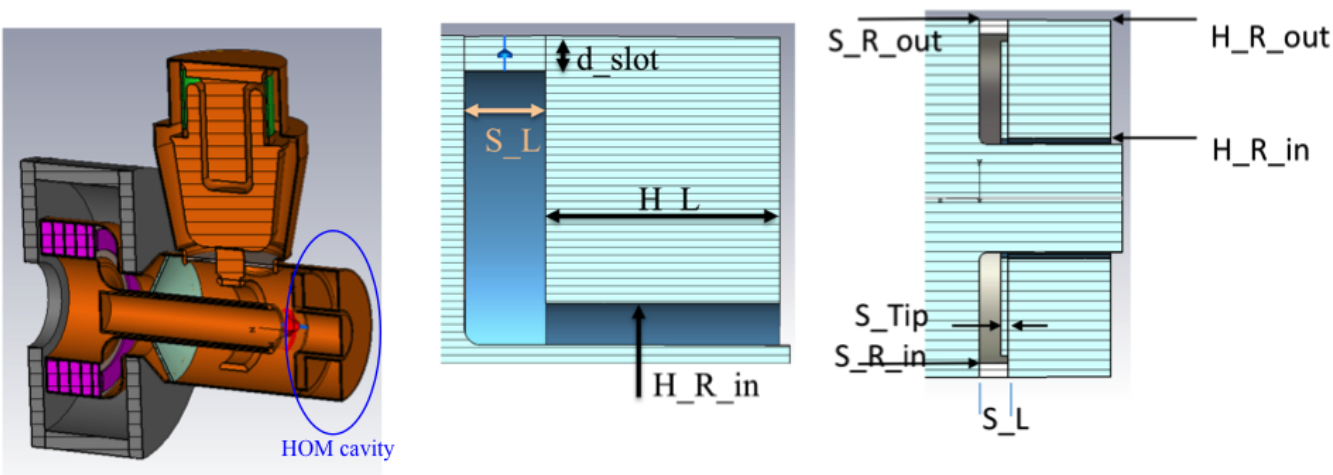

Figure 40: The HOM cavity is attached to the gap end of the cavity. The parameters shown in Table 4 to optimize the size of the HOM cavity are shown here.

The higher order modes of the cavity without the HOM cavity are calculated with two different MWS tube models and the semi-analytic model is shown in Figure 41. In all three cases

- The R/Q of the operating mode is almost the same in all three models.
- The HOMs associated with the tuner are nearly unchanged.
- The HOMs associated with the tube cavity go to higher frequency.
- The tube cavity provides additional damping of the HOMs.

The fundamental operating mode and HOM 1, 2 and 4 when the HOM cavity is connected (without damping resistors) are shown in Figure 42. These HOMs are well separated from the fundamental operating mode by >30 MHz and so do not interfere with the fundamental. However, the Q of the fundamental operating mode is lowered with the addition of the HOM cavity. Its impact is the greatest at the high frequency end where the Q is lowered by 10%. See Figure 43. The effect on the shunt impedance is minimal.

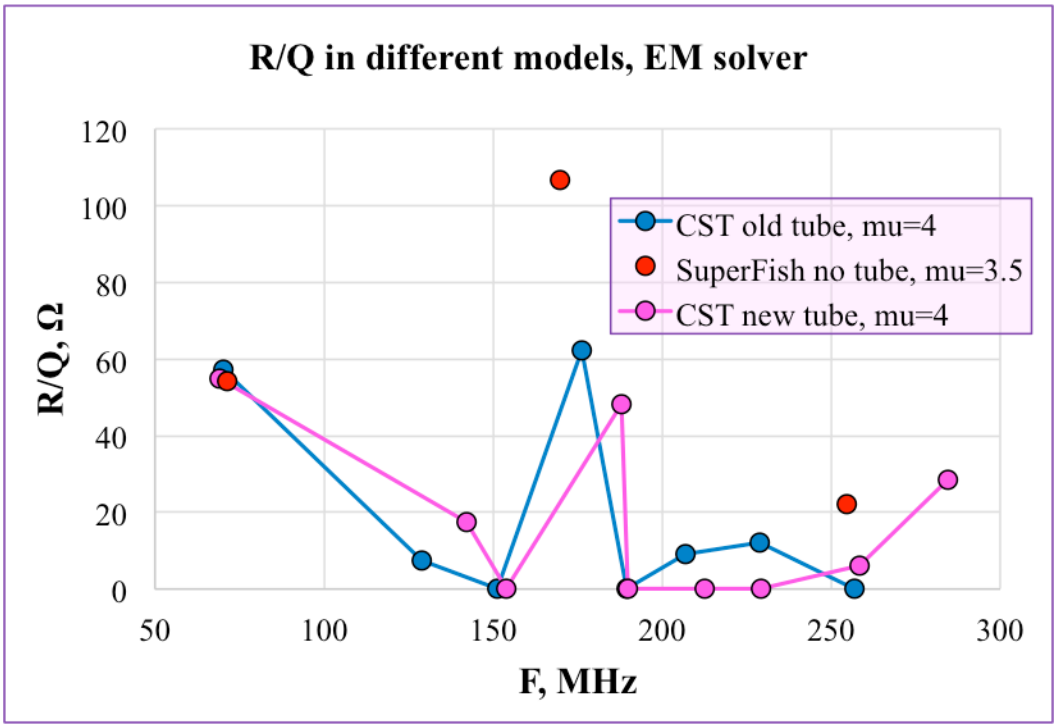

Figure 41: The R/Q of the cavity without the HOM cavity from three different models. Note: HOM 1 is not seen in the Superfish model.

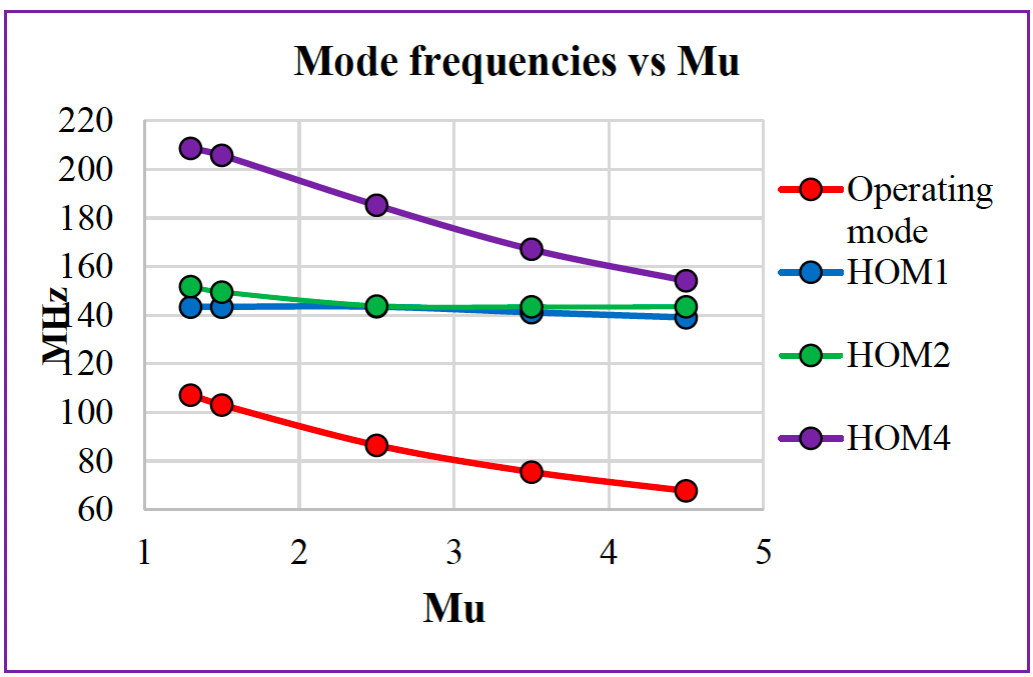

Figure 42: The behavior of the modes of the cavity with the HOM cavity without damping resistors.

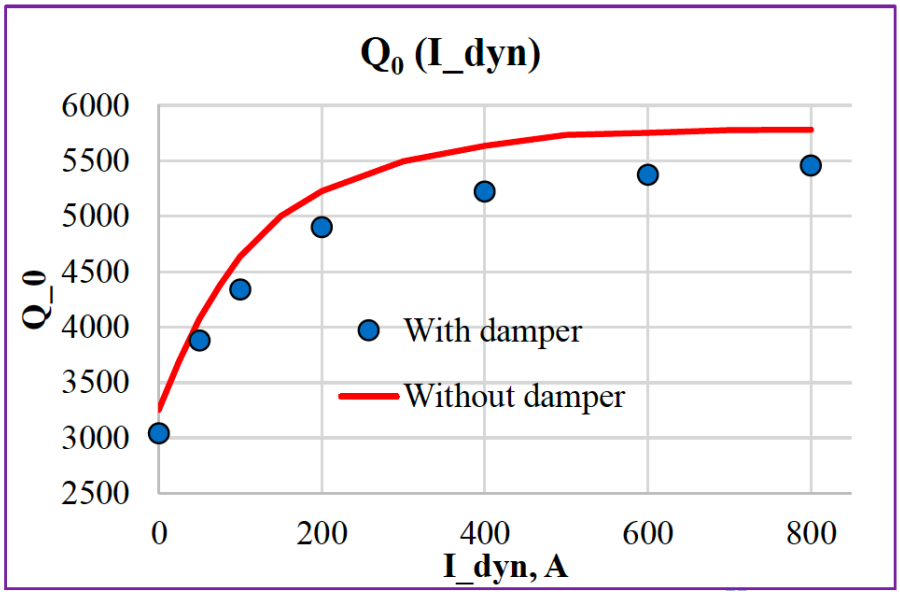

Figure 43: The Q of the cavity with and without the HOM cavity. Editor's note: The current required assumes 48 turns for AC and 11 turns for DC. See section 6.2.4.

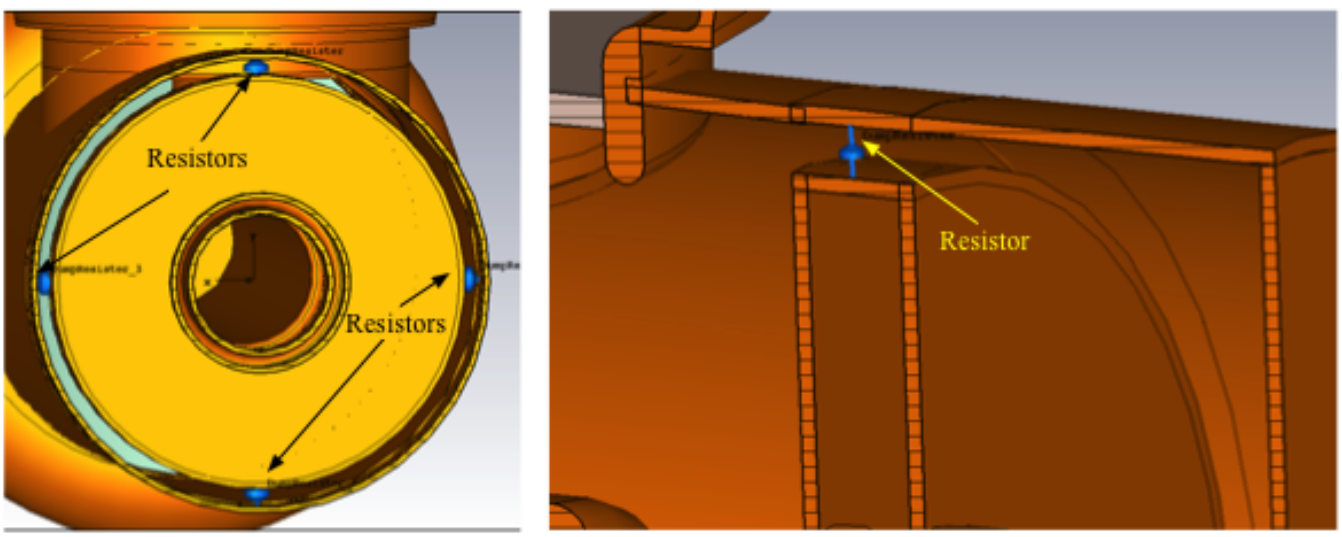

Figure 44: The location of the four damping resistors used in the CST model. These four resistors are effectively in parallel.

The strongest HOM mode is HOM 2 (HOM 1 is not seen in the Superfish calculation). When the damping resistance is 20 Ω (four 80 Ω in parallel shown in Figure 44), the shunt impedance of HOM 2 at injection is reduced from 150 kΩ (zero damping resistance) to 2 kΩ while the fundamental is increased by about 4%. See Figure 45. The behavior of HOM 2 as a function of bias current is shown in Figure 46.

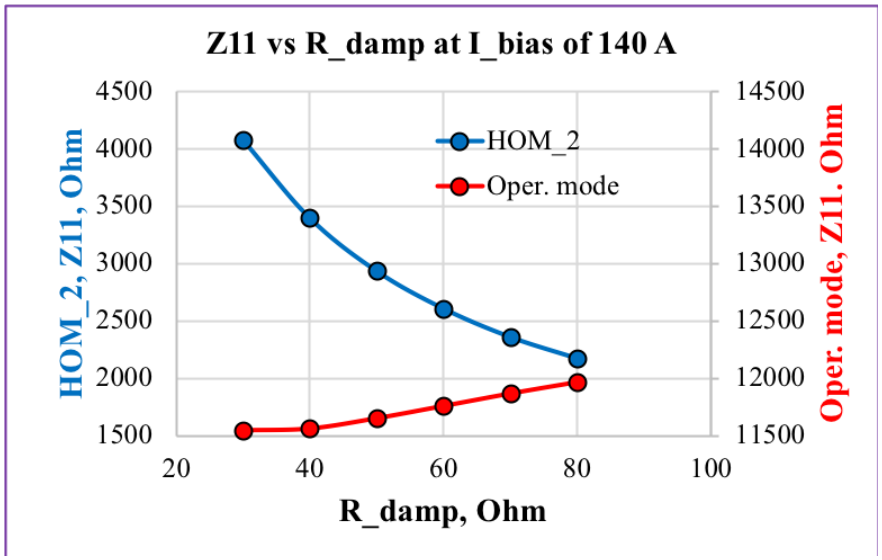

Figure 45: Optimizing the damping resistance.

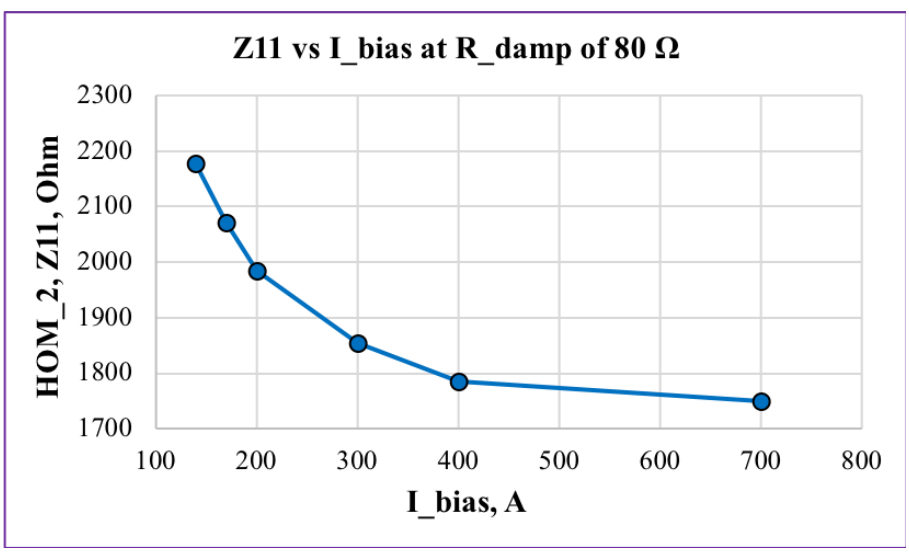

Figure 46: The behavior of HOM 2 as a function of the solenoid bias into 48 solenoid turns.

7.2 Y567B load lines

In order to drive the cavity, we have to check that the impedance seen by the Y567B is within its range so that it can power it efficiently. In our setup, the Y567B is in the "grounded grid" configuration for powering the cavity. It is also operated approximately as a class B amplifier. Our analysis of the power efficiency comes from Carter [34, 35]. We will assume that the tube is operated as a class B amplifier in the following analysis. And, in this operating mode, the best-case theoretical amplifier efficiency is 75% where power efficiency is defined to be the ratio $P_{\mathrm{rf}}/P_{\mathrm{DC}}$, and P_{rf} is the power going into the wanted RF part of the half sine wave and P_{DC} is the power going into the DC component of the half-sine wave.

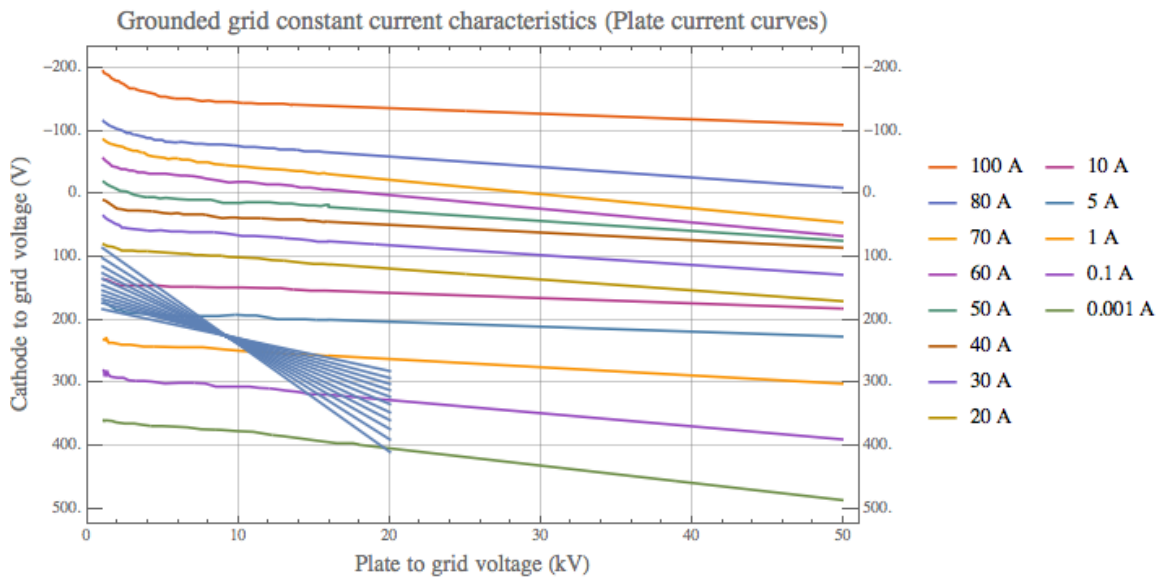

Figure 47: A set of load lines (blue) is plotted against the grounded grid constant current curves of the Y567B.

We determine the required anode voltage from the tube to get 100 kV gap voltage with the step up ratios shown in Figure 25. (Note: At the time when this calculation was made, the MWS model was not mature enough to be used and so the TLM was used instead. The final results from MWS shown in Figure 35 for the anode impedance and the step up ratios are close enough to the TLD model that a recalculation was not done.) We increase the required voltage by 1 kV to take into account the screen voltage. We then use the anode voltage and the power loss (shown in Figure 26) and 75% power efficiency to calculate the anode current. From here, we multiply the anode current by 4 (rather than π to take into account non-linearities of the tube) to obtain the peak anode current.

Using the method described by Carter, we use the peak current found above, minimum cathode to grid bias of 250 V, minimum anode voltage of 1 kV, to get the end points of the load lines. An example

of load lines that we have used the data from Figure 25 and Figure 26 is plotted against the grounded grid constant current characteristic curves of the Y567B is shown in Figure 47. And from these load lines, we can calculate the tube efficiency as a function of anode impedance shown in Figure 48. As we can see from this figure, the tube is most efficient at 1.3 kΩ, i.e. at injection. This is exactly where we would want the highest tube efficiency because this is where the tube is required to output the highest power. Therefore, from these calculations, the Y567B is able to drive our cavity because the power required is always $<$ 50 kW for the entire frequency range.

There are two observations that we would like to point out:

1. The anode impedances calculated by the load lines are different compared to the TL model at high frequency. For example at 110 MHz, the anode impedance calculated by the load lines method gives 5.5 kΩ while the TL model gives 7.5 kΩ. However, at 76 MHz the results are much closer: the load lines method gives 1.1 kΩ and the TL model gives 1.2 kΩ.
2. The anode impedance does not only determine the efficiency. The efficiency also depends on the step up ratio, and thus the value of the anode voltage and current. Therefore, it is insufficient to just specify the anode impedance to have an idea of what the efficiency is, i.e. the anode voltage also matters.

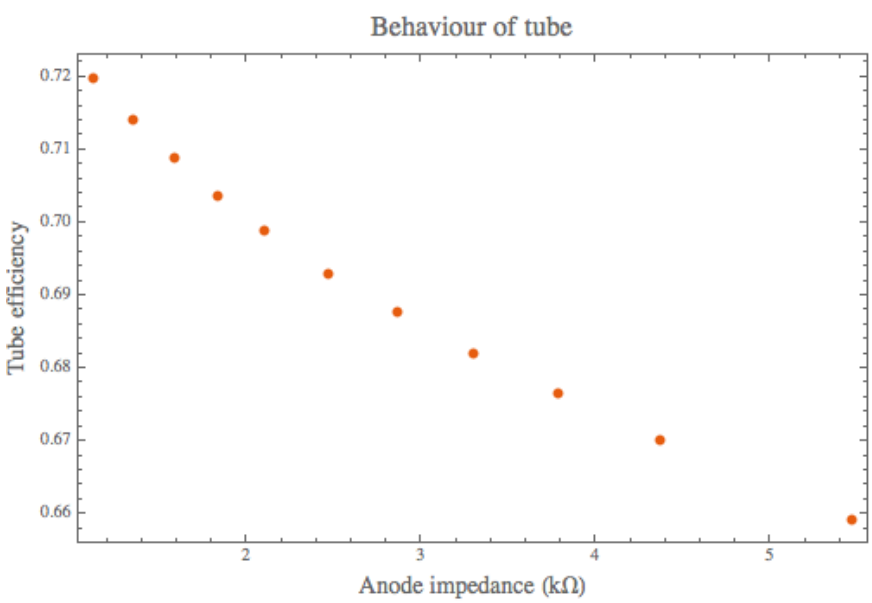

Figure 48: The tube efficiency as a function of anode impedance.

8 Tuner (I. Terechkine, G. Romanov)

The accelerating cavity is loaded with garnet which is a gyromagnetic material. The permeability of the garnet is a function of the bias magnetic field. The part of the cavity that is the garnet is placed within the bias magnetic system is called the tuner. Five garnet rings with a specially shaped shim piece form the tuner stack. The shim piece is there to improve the bias magnetic field uniformity at the transition between the loaded and unloaded parts of the transmission line. Each of the 21 mm thick garnet rings have a thin alumina ring glued to it, while the 16 mm thick garnet ring has two thin alumina rings glued to it. The alumina rings enable the heat that is generated by the RF to be conducted out to the shell of the tuner. The shell of the tuner is copper plated stainless steel with water cooling pipes brazed to it. The thickness of the shell and the thickness of the copper coating has been chosen to reduce eddy currents without compromising the RF properties of the cavity. Figure 49 shows a cross-sectional view of the tuner assembly.

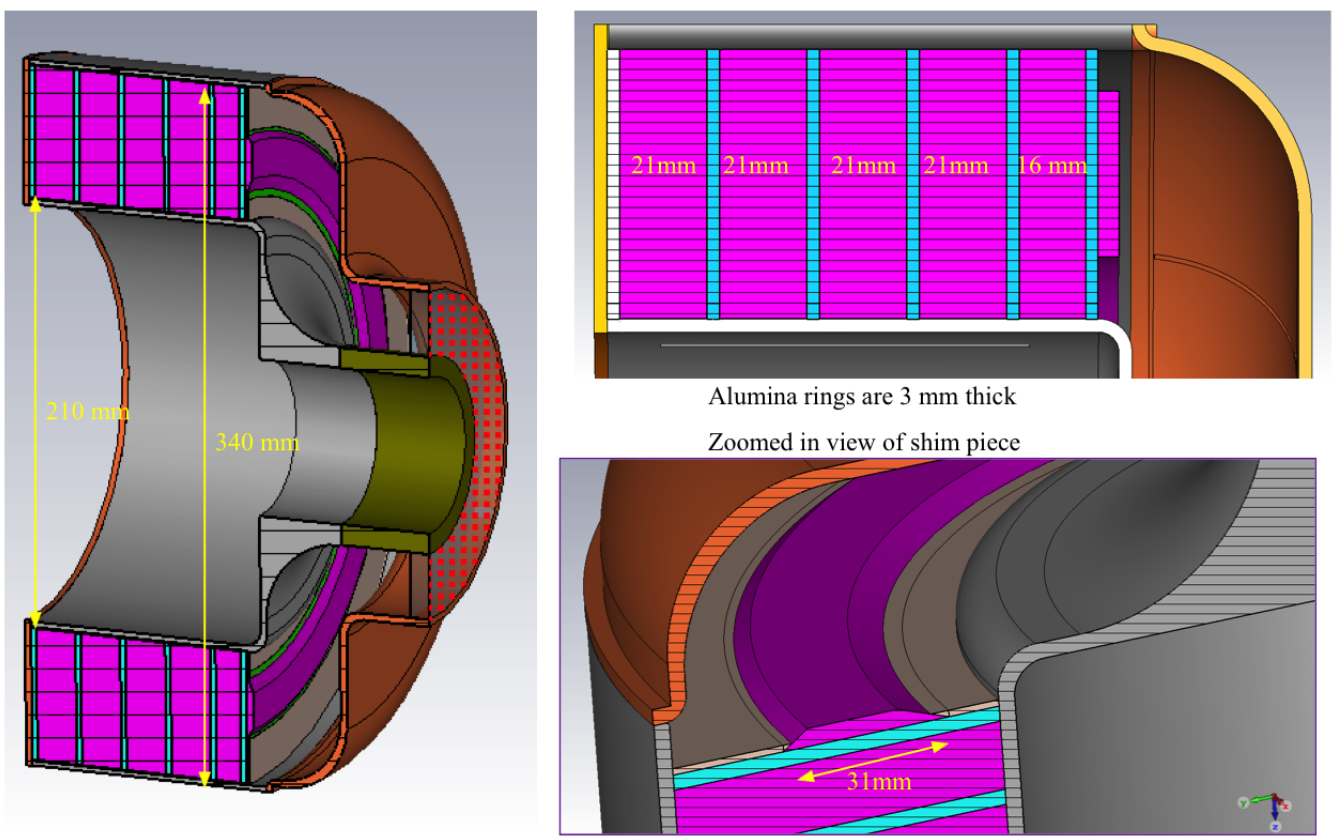

Figure 49: The tuner assembly consists of 5 garnet rings that are glued to an alumina substrate and a specially shaped shim piece. The shell is made of copper plated stainless steel with slits to reduce eddy currents.

8.1 Garnet ring

Each garnet ring is made of 8 sectors of garnet glued together and then glued onto an alumina substrate. See Figure 50. The reason why the ring cannot be made as one contiguous piece of garnet is because currently (as of 2016), the only known vendor for garnets, National Magnetics, does not have a large enough oven to make anything bigger.

For quality assurance, each garnet sector is accompanied with a witness piece. Every witness piece and ring undergoes RF tests. The results of these tests will be discussed in section 16.

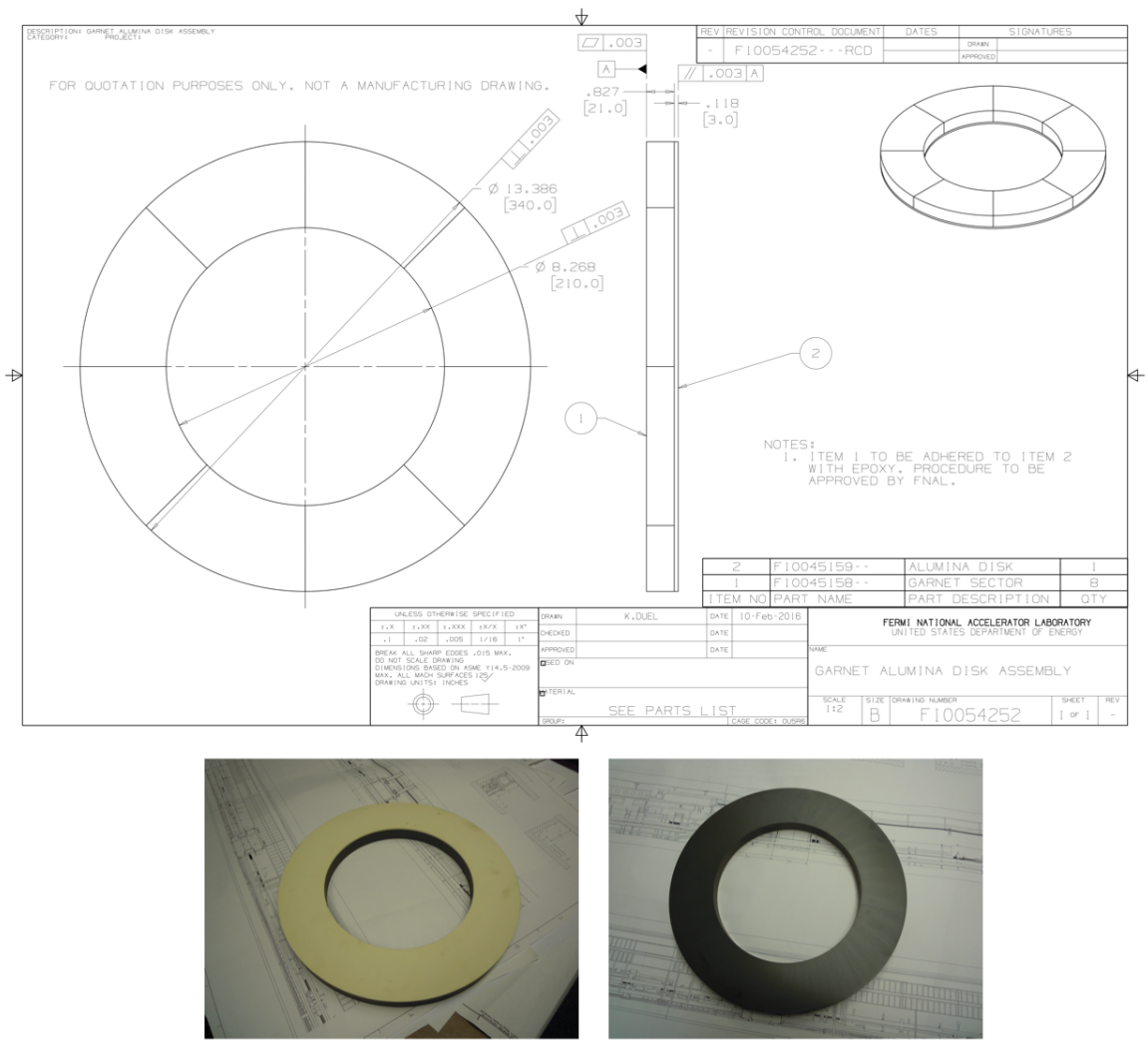

Figure 50: Each garnet ring is made from 8 sectors of garnet glued together and then glued onto an alumina substrate.

8.1.1 Stycast 2850FT epoxy

The epoxy used to glue the ring together is Stycast 2850FT [21]. The procedure for gluing the garnet sectors together is detailed in section 17.2. The RF properties of Stycast have been measured and was discussed in section 5.

8.2 Shim

A shim ring has been added to the front of the tuner stack to improve the bias magnetic field uniformity at the transition between the loaded and unloaded parts of the tuner [36]. The shim ring like the garnet ring, is made of 8 sectors of garnet glued to an alumina substrate. See Figure 51.

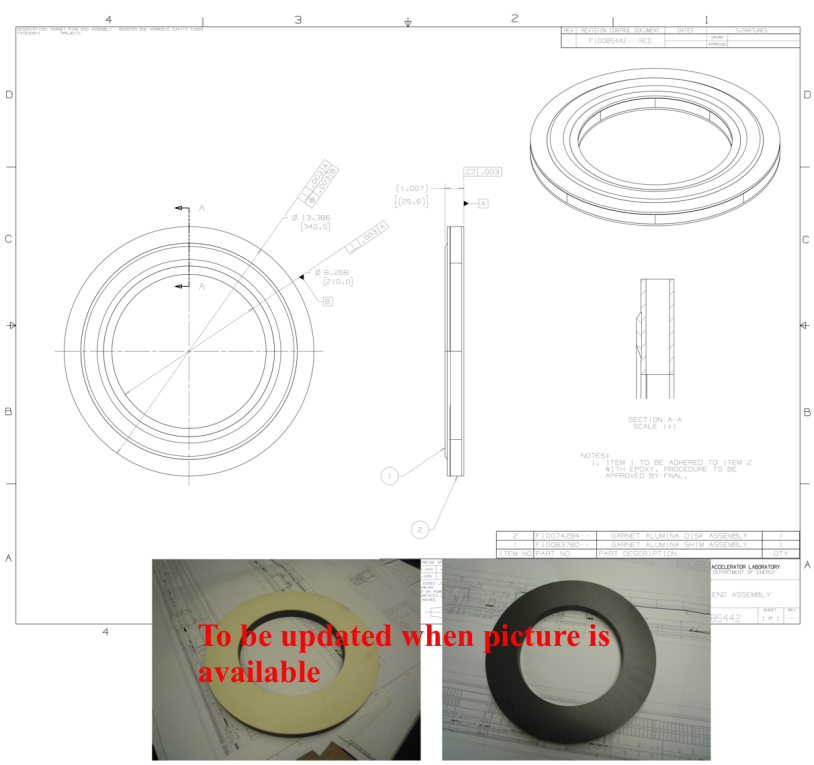

Figure 51: The shim ring consists of 8 sectors of garnet glued onto two alumina rings. A shim alumina ring is glued to the top surface.

8.3 RF thermal analysis

The region where there is high RF power loss is closely associated with the regions where the bias magnetic field is at its weakest. From our simulations, the transition region between the loaded and unloaded transmission line is where there is a sharp increase in the complex magnetic permeability. There are several ways to improve the field quality at the transition. The option that is chosen is to add a shim on this transition surface. The result of adding a shim to the tuner greatly improves the uniformity of the field in the tuner as shown in Figure 52.

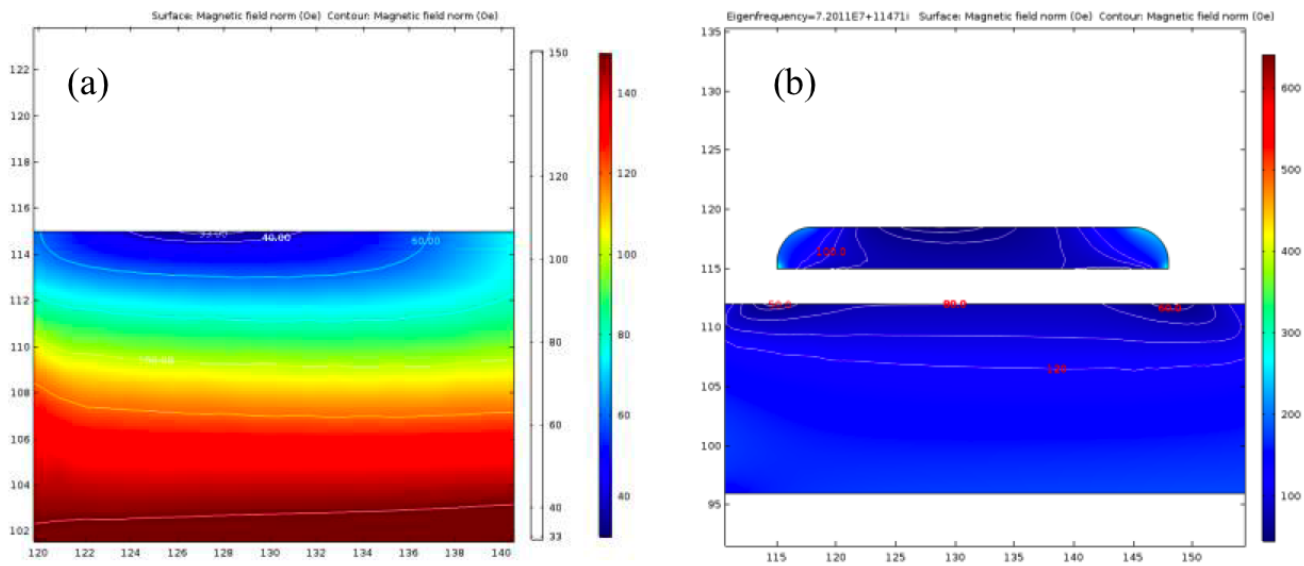

Figure 52: The magnetic field density and contour plots in the tuner (a) without the shim and (b) with the shim. It is clear from these results that the magnetic field is a lot more uniform when the shim is added.

If we call the garnet at the transition surface the top ring, then due to the lower power loss on the top surface with the addition of the shim ring, its thickness of the top ring has been increased from 13.5 mm (without the shim ring) to 16 mm. The rest of the rings are 21 mm thick.

There are two 3 ms intervals of interest during the ramp: injection and transition where the gap voltage is at 100 kV. See Figure 7. The power dissipation in the top ring during these two active intervals are shown in Figure 53. The time averaged heat deposition is ~300 W during injection and ~115 W during transition. Thus, thus the total heat dissipated is ~415 W. For the shim, the heat deposition is 21 W during injection and 15 W during transition. This gives a total of 36 W.

To evaluate the temperature in the top portion of the tuner, we have to use the average power density distribution in those parts of the tuner. The RF power loss density in the top two alumina rings and the RF losses at the top of the tuner stack are shown in Figure 54.

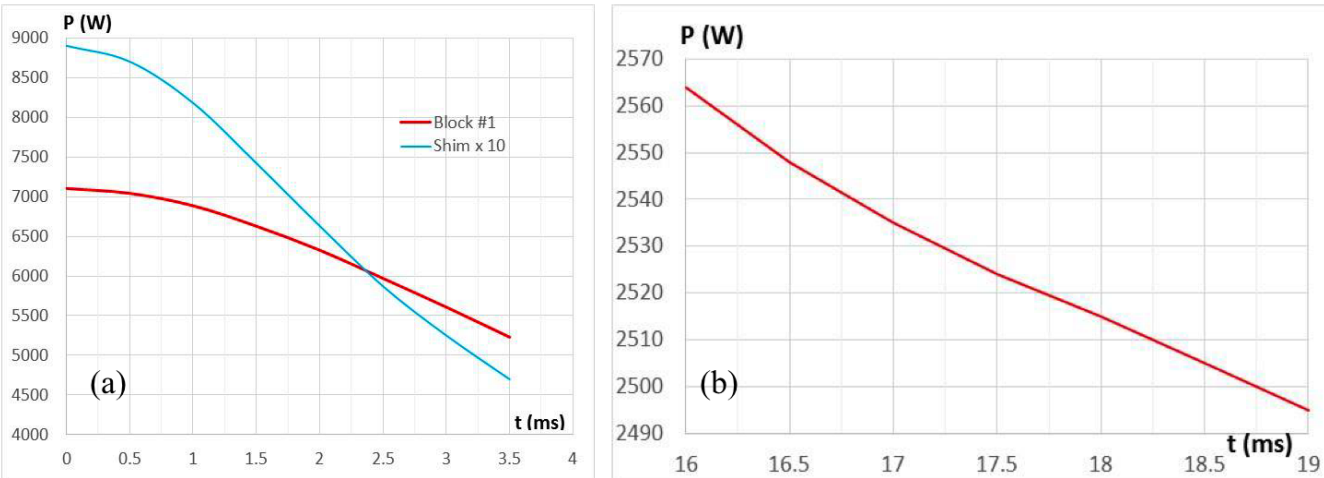

Figure 53: The power dissipated in (a) the top ring and shim during injection and (b) in the top ring during transition.

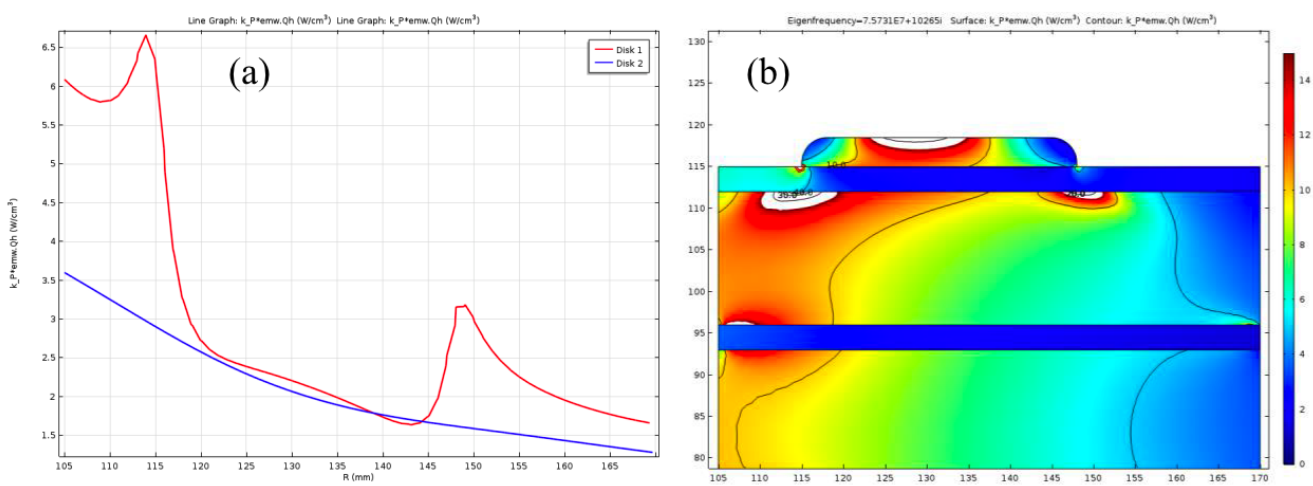

Figure 54: (a) The RF power loss density in the top two alumina rings and (b) the density map of the RF losses at the top of the tuner.

The temperature distribution map of the top part of the tuner with and without thermal contact on the inner and outer cylindrical surfaces are shown in Figure 55. The details of how these maps were created from the power loss distribution can be found in Ref. [36]. The maximum temperature rise is 49°C without thermal contact for the garnet rings but thermal contact for the alumina rings. And it is 44°C when there is contact on both the garnet and alumina rings.

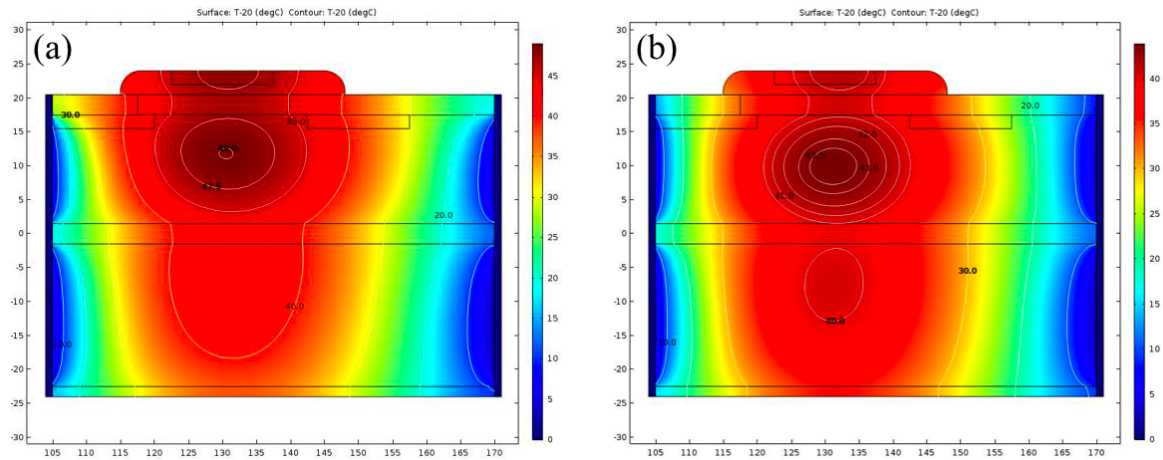

Figure 55: The temperature map when (a) the garnet ring does not have thermal contact with the walls both the inner and outer cylindrical surfaces while the alumina rings do; (b) all both the garnet and alumina rings have thermal contact. The maximum temperature is lowered by 5°C between cases (a) and (b).

8.4 Optimizing the shape of the shim

Although a rounded shim with straight edges was used in the thermal analysis in the previous section, we found that there is anomalous heating of the top alumina disk. Our analysis showed that this was due to an elevated electric field between the shim and the inner electrode of the cavity. Figure 56 shows the static RF power loss density in the alumina (a) and the values of the electric field in the area (b).

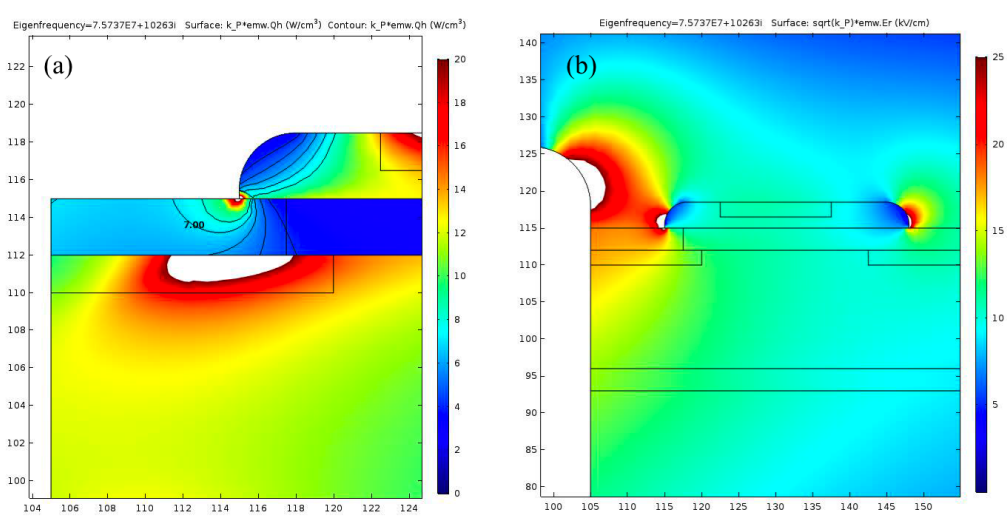

Figure 56: (a) RF power loss density and (b) the electric field.

The maximum value of the radial component of the electric field on the surface of the alumina at the triple point is ~40 kV/cm. However, this value can be reduced to 27.5 kV/m by simply reshaping the shim. An added advantage after the modification is that the minimum bias magnetic field is slightly increased from 67.3 Oe to 69.3 Oe and the localized permeability decreased from 12 to 11.75. Figure 57 shows the before and after results.

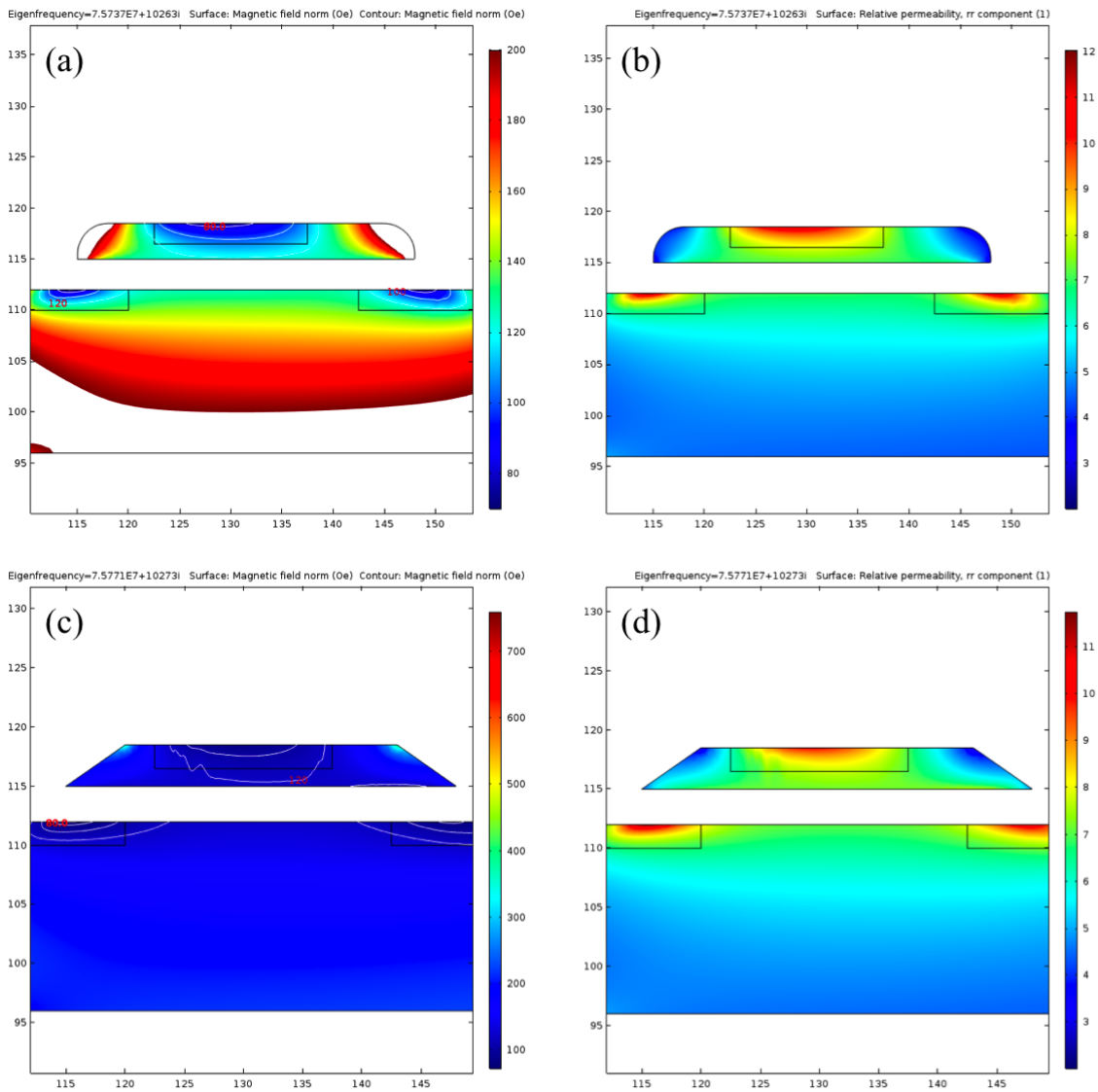

Figure 57: (a) and (b) show the magnetic field density and the relative permeability of the top of the tuner stack with a rounded shim. (c) and (d) shows the same plots for an angled shim.

8.5 Thermal grease

Thin layers of thermal grease will be applied between all contact surfaces in the tuner stack. The grease that will be used is Super Thermal Grease II 8616 [22] which is a mixture of alumina and zinc oxide suspended in non-silicon based oil. We chose this grease because

1. It has acceptable thermal conductivity of 1.78 W/m·K.
2. It has a high dielectric constant of 6.77 at 1 kHz. The high dielectric constant is desirable because the grease will be used to fill in the air gaps between copper and garnet or copper and alumina which reduces the electric field at the triple points of contact. Its dielectric property at our frequency of interest has been measured and was discussed in section 5.
3. It does not contain silicon which can contribute to mixed waste in a radioactive environment.

Its RF properties in our frequency of interest were measured and was discussed in section 5.

8.6 Eddy currents

The details of the Eddy current analysis can be found in Ref. [37]. **Warning: This analysis was done before the solenoid design was finalized. In this study, the solenoid has 50 turns rather than 59 turns as in the as-built solenoid.** Nonetheless the results apply for how the tuner shell should be made.

The solenoid and tuner geometry that is used in this analysis is shown in Figure 58. A simplified current pulse for this study is shown in Figure 59. In this study, We will assume that the solenoid has 50 turns and has this current pulse at a repetition rate of 15 Hz.

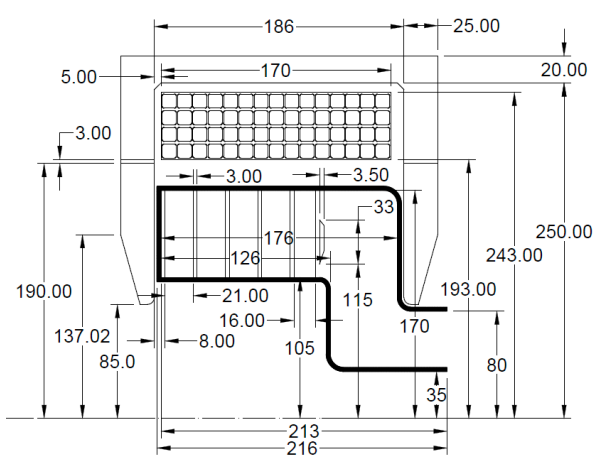

Figure 58: This is the solenoid geometry used in the 2D analysis. Note: This is not the final solenoid design.

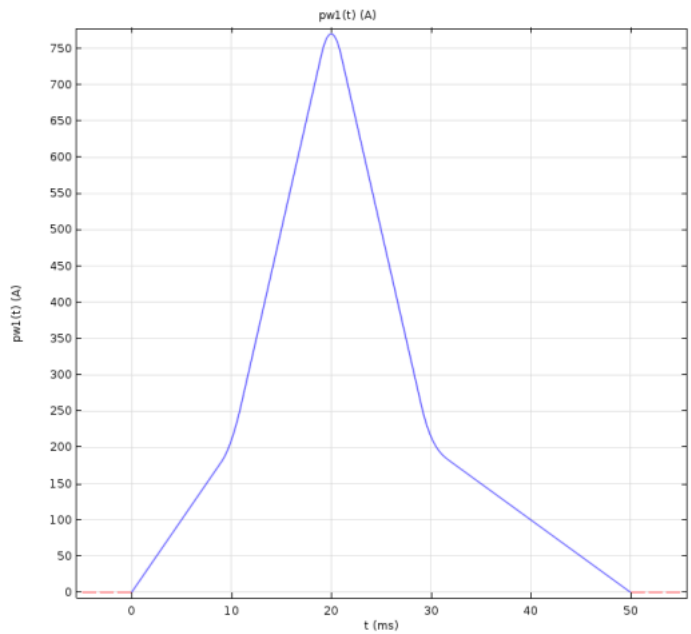

Figure 59: This is the simplified current pulse sued for the Eddy current impact study. In this study the number of solenoid turns used is 50.

The bias current pulse has been designed so that at injection, it is 168 A for the cavity to have a resonant frequency of 75.7 MHz. To reach the injection state, a "setting" current ramp is used with a ramp rate of 20 A/ms. After injection, the maximum current ramp rate is 60 A/ms. After the transition period, which ends at 19 ms, the current is brought back to zero before the next accelerating cycle. The ramp down rate is also 60 A/ms.

In the conceptual design of the tuner, the shell is made of 3 mm thick stainless steel with a 25 μm thick copper coating. Our 2D simulations of the Eddy current impact analysis concludes that the shell is magnetically semi-transparent. The Eddy current in the shell reaches 1200 A, which is about 14% of the total current turns at injection (168 A × 50 turns = 8400 A turns). The average heat generated in the shell with this current ramp can reach about 1.5 kW with most of the heat deposited in the outer part of the shell.

Besides heating, the Eddy current in the shell changes the spatial distribution of the bias magnetic field inside the tuner. Thus, both the redistribution of the bias magnetic field and the heating complicates the design of the cooling for the shell. The most natural way for increasing the transparency of the shell to the changing magnetic field and decreasing the power loss is to interrupt the azimuthal component of the current flow by adding longitudinal slots to the shell. This analysis requires the use of a 3D model.

8.6.1 3D model

The geometry of the RF shell used for the 3D Eddy current impact analysis is shown in Figure 60. Although there are more design features than that used in the 2D model shown in Figure 58, this geometry is still simplified but captures the needed details for the Eddy current analysis. We will not consider RF performance at this stage.

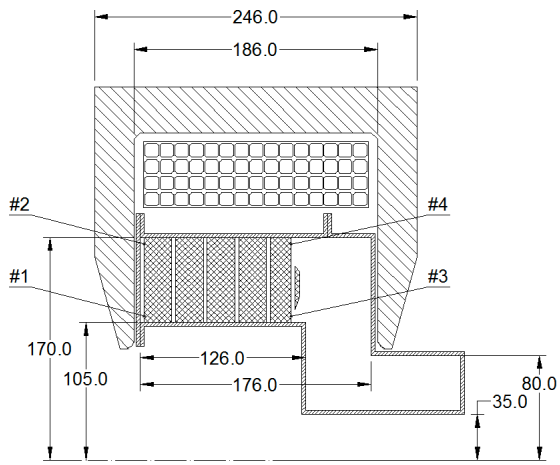

Figure 60: The geometry of the tuner and solenoid used for the 3D study. Note: This is not the final solenoid design.

We have found that the most challenging part of the accelerating cycle is at injection [38]. During this time, the bias magnetic field in the garnet can get dangerously close to the gyromagnetic resonance. Therefore, we will only study this part of the cycle. The results at injection can be used to evaluate the impact of the Eddy currents for the entire accelerating cycle because the bias current ramp rate reaches its maximum here. Figure 61 shows the bias current that we have constructed to ensure that we have the required frequency ramp for the tuner at injection only.

The 3D simulations discussed in Ref. [37] show that by splitting the tuner shell into four insulated sectors, the azimuthal component of the Eddy current is interrupted. In Figure 62, we show the current flow before and after segmentation. The new current flow pattern tells us how to add longitudinal slots to the shell if needed. When we add these slots, it will have to be done without disturbing the TEM-type mode in the tuner and compromising the structural integrity of the shell.

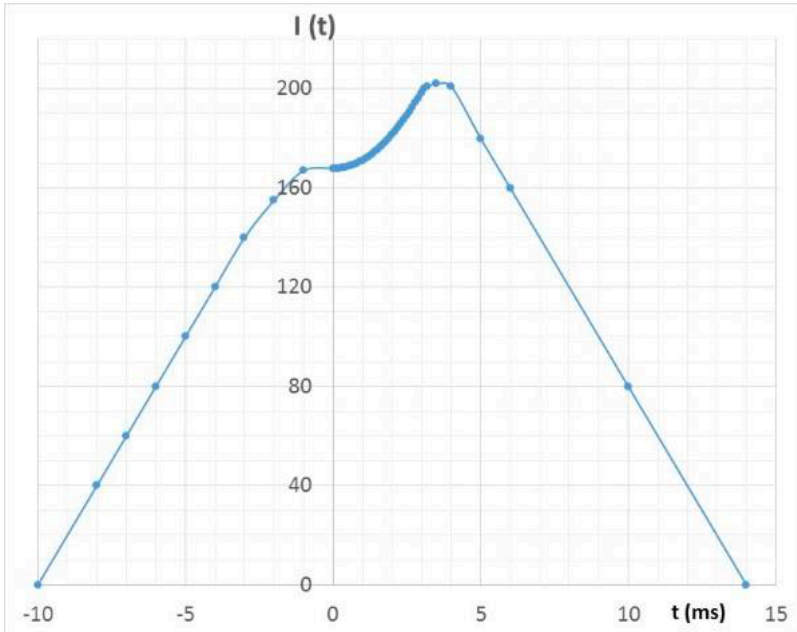

Figure 61: The current time profile for injection only. The darker part of the curve is the region where beam injection occurs.

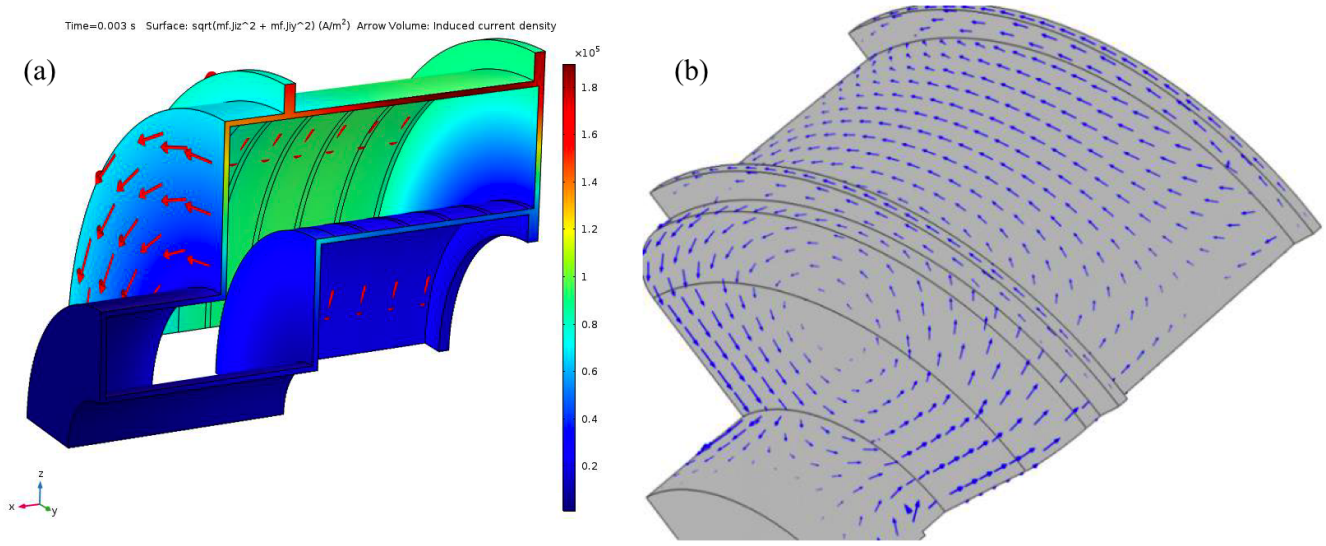

Figure 62: (a) shows the azimuthal Eddy current flow when the tuner has not been partitioned into 4 segments. (b) is the Eddy current flow after partitioning.

We made several shell models that had different longitudinal slot patterns to check their impact on the setting current rise rates and its effect on the bias magnetic field. We used the slot pattern shown in Figure 63 as the reference design. We found that the addition of more slots to the reference tuner shell and to the end plates only led to subtle changes in the distribution of the Eddy currents and fields. Increasing the number of segments from 4 to 8 also did not show any significant improvement of the bias magnetic field uniformity but only made the mechanical design more difficult. Therefore, we settled for just partitioning the tuner into 4 segments without any additional slots in the final design, i.e. Figure 62(b).

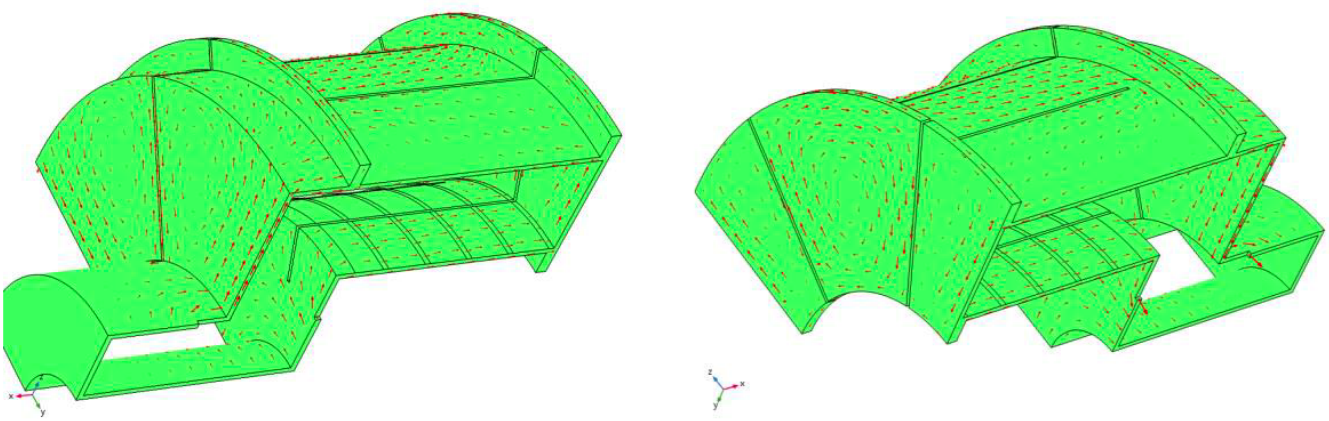

Figure 63: Two views of the reference tuner shell that show the slot patterns. Note: the final design does not have slots.

8.6.2 Bias magnetic field distribution

The magnetic properties of the garnet are highly non-linear. Its permeability and local magnetic field can have large variations in a small area. If the bias magnetic field becomes close to the gyromagnetic resonance at any RF frequency, then significant RF loss can result. It was shown in Ref. [38] that the part of the tuner closest to the accelerating gap is the most vulnerable part of the cavity that can be subject to the increase in RF power loss. And so, we must pay attention to the field at this location. We also have to pay attention to the field of the tuner at the end flange because of the segmentation. Here, the field is partly forced into the gap between segments of the shell. Figure 64 and Figure 65 show the bias magnetic field and permeability in these two regions.

We have found from the results shown in Figure 64 and Figure 65 that the volumetric average permeability of the tuner is 3.41 at injection. The minimum bias magnetic field in the tuner is about 200 G which is comfortably higher than the gyromagnetic resonance value of about 27 G at the injection frequency of 75.7 MHz.

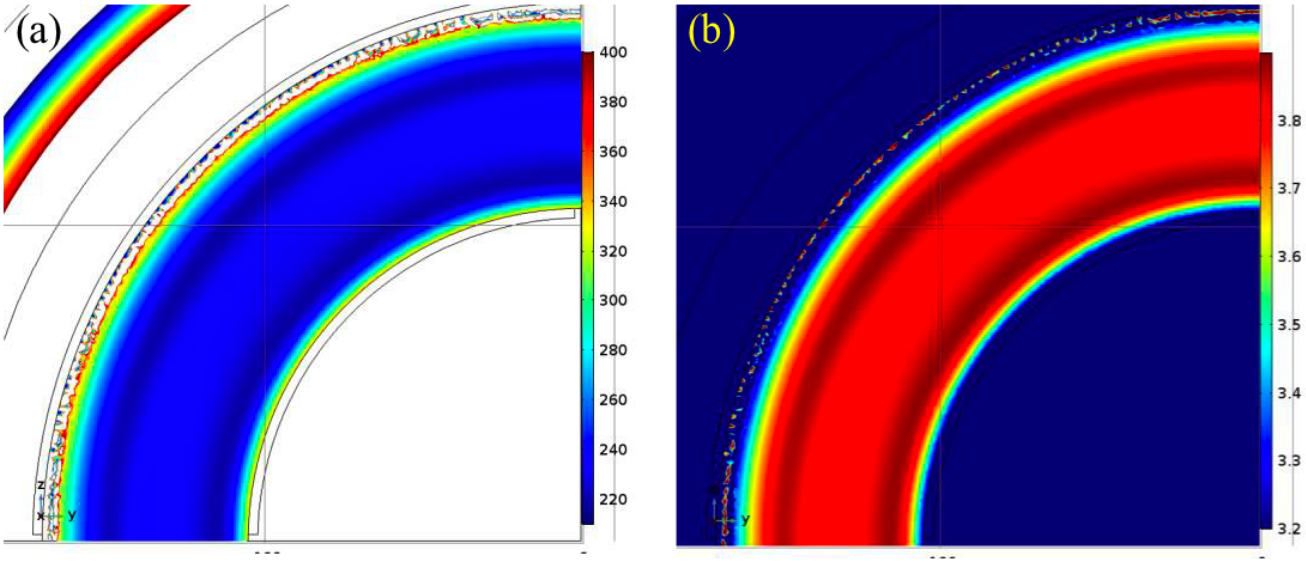

Figure 64: The maps of (a) the magnetic field and (b) the permeability in the plane closest to the gap (z = 118 mm) at injection (3.75 ms).

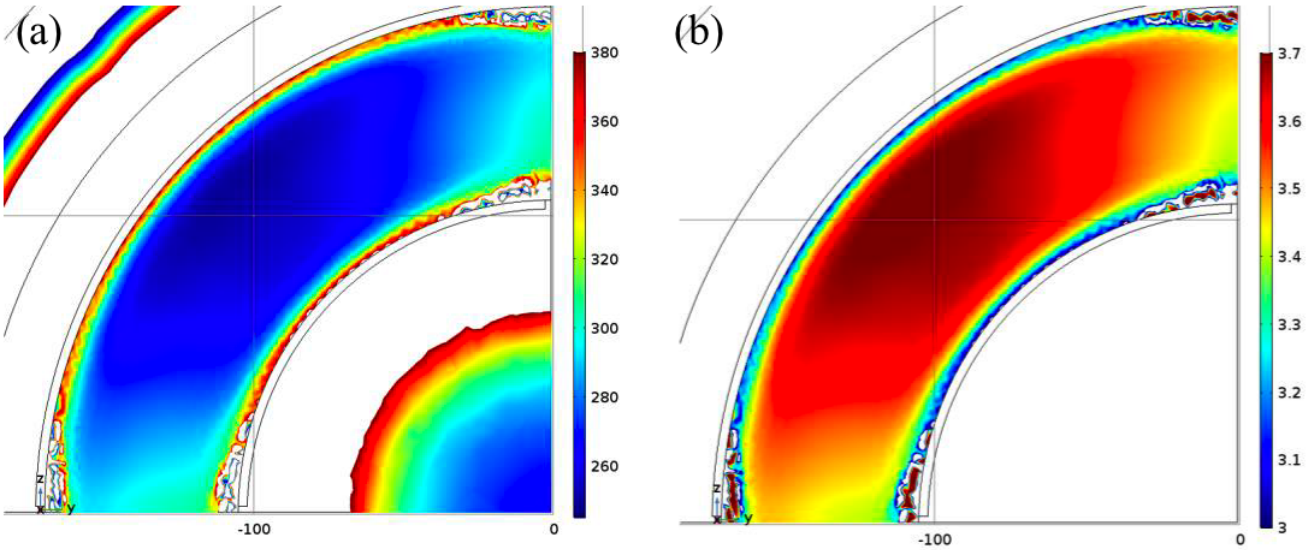

Figure 65: The maps of (a) the magnetic field and (b) the permeability in the plane closest to the end flange (z = 10 mm) at injection (3.75 ms).

8.6.3 Tuner shell heating and cooling

The RF loss in the garnet stack has been discussed in section 8.3 and Ref. [38] and the Eddy current distribution in the tuner has been found and so we can calculate the temperature distribution in the tuner. Figure 66 shows the tuner with the cooling channels in the inner surface of the shell with the solenoid removed. The outer shell has a similar cooling arrangement. Each segment will be cooled with its own electrically insulated cooling circuit. The cooling water is assumed to be 27°C in these simulations. The goal is to keep the temperature of the tuner shell below 100°C which became possible from the use of the thermally conducting grease between the shell and the rings.

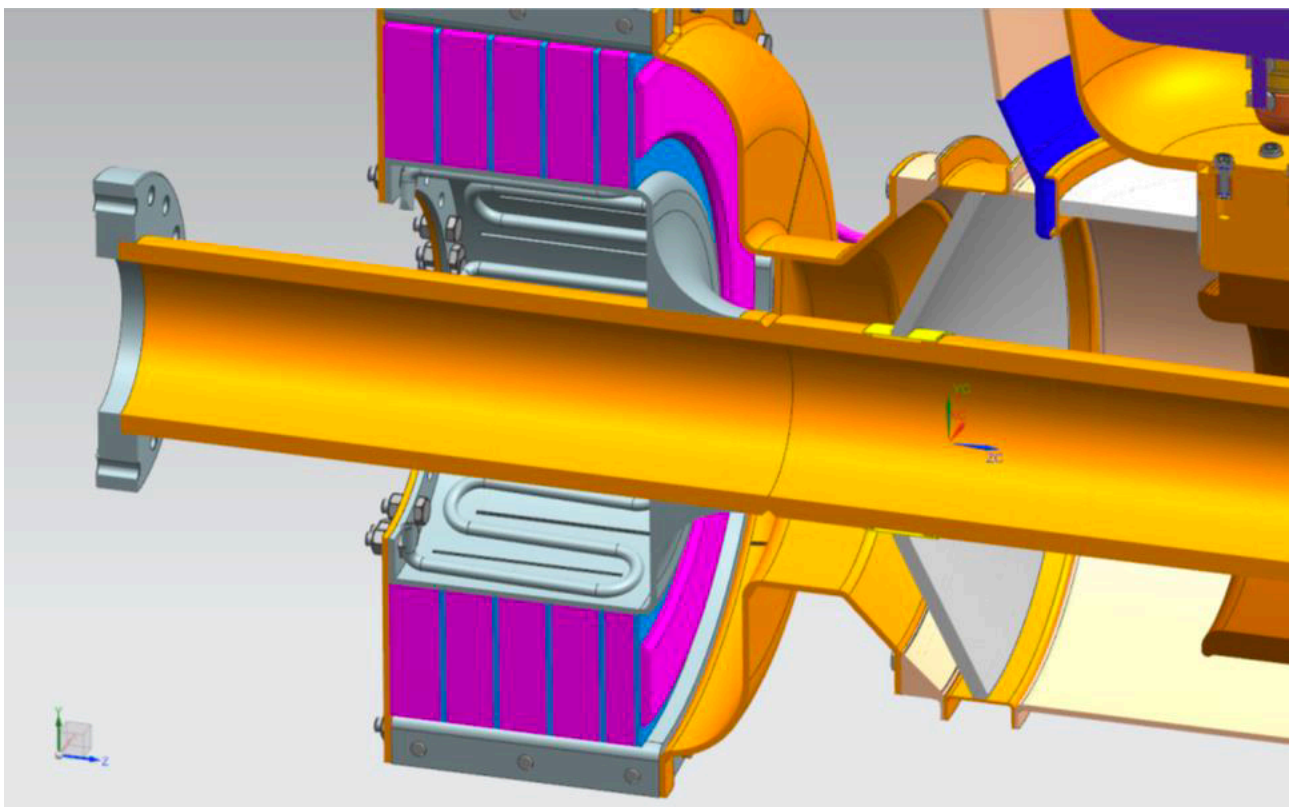

Figure 66: The tuner with the solenoid removed. The cooling channels on the inner surface of the shell can be clearly seen here. (Editor's note: there is an extra cooling disk between the end flange and the tuner stack that is not shown here).

After many iterations of the cooling design, we have found that by adding an alumina disk between the end flange and the tuner stack, we only need to apply cooling to the peripheral surfaces of the flange. In this case the temperature of the flange does not exceed 95°C. Cooling has to be applied to the neck region as well because we have found that Eddy current heating is high at the electrical connection of the neighboring segments. Figure 67 shows the proposed cooling scheme.

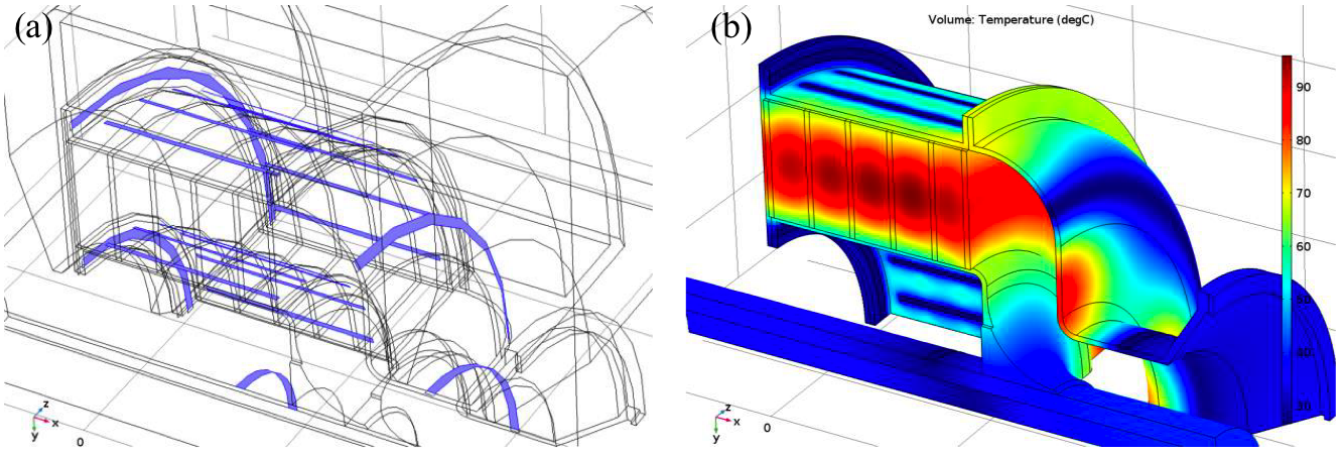

Figure 67: (a) is the proposed tuner cooling scheme and (b) the temperature map.

8.7 Triple points (G. Romanov)

We have to be very careful in the design and assembly of the tuner to avoid triple points where the E-field can be greatly enhanced. Areas where the garnet, alumina and metal shell meet must be carefully filled with thermal grease (See section 8.5). If we assume that the dielectric constant of the thermal grease is about 6 then the E-field can be reduced by a factor of between 6 and 7. See Figure 68. Another location of concern is the interface where the tuner shell segments are bolted together shown in Figure 69. The E-field is reduced by a factor of 3 to 3.5 without thermal grease but with straight edges. The addition of thermal grease should reduce the E-field even further.

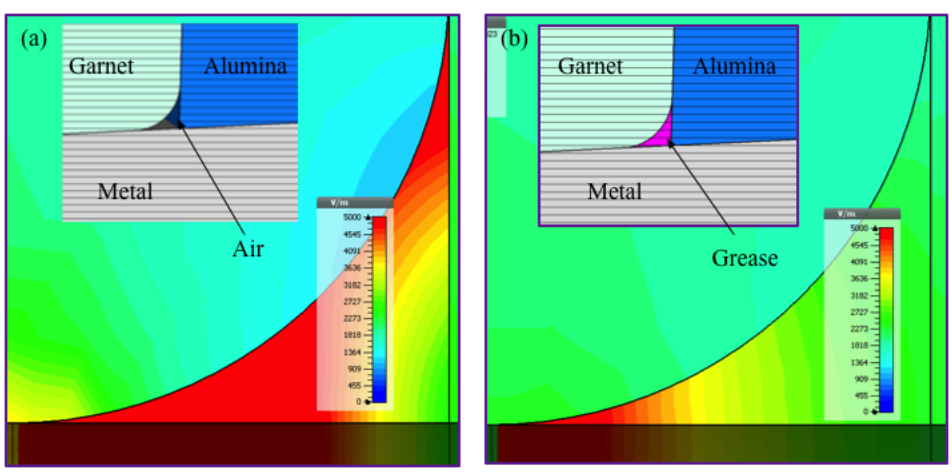

Figure 68: (a) shows the field with air in the gap and (b) with grease. The E-fields are reduced by a factor between 6 and 7 in (b).

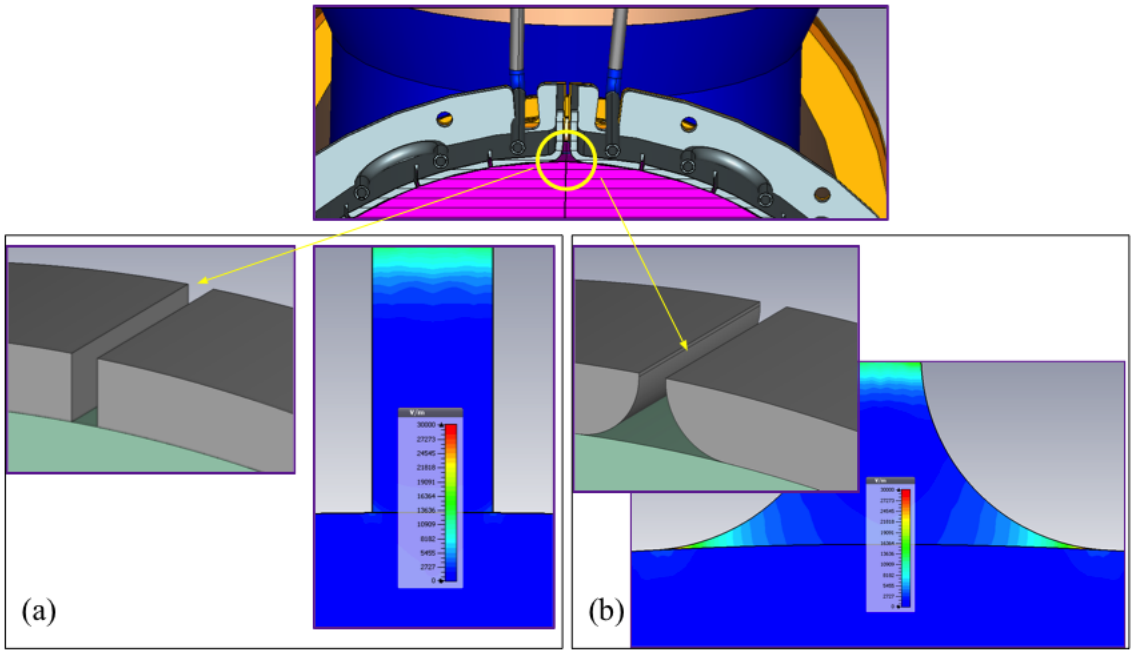

Figure 69: The gap at the location where the tuner segments are bolted together can have a lower E-field by a factor of 3 to 3.5 by having straight edges shown in (a) compared to straight edges shown in (b). In this comparison, there is no thermal grease filling the gap.

9 Bias solenoid (I. Terechkine)

The magnetic permeability of garnet in the tuner is determined by the bias magnetic field. In this design, the bias magnetic field is generated between the two poles of a magnet with a solenoid type winding. The central (axial) part of the dipole accommodates the beam pipe. The solenoid has been designed so that it can produce the necessary fields to bias the tuner so that it can follow the Booster ramp. The fast cycling of the Booster at 15 Hz means that the solenoid yoke has to be made of laminations to reduce the effects of Eddy currents. The cross-sectional view of the solenoid and tuner is shown in Figure 70.

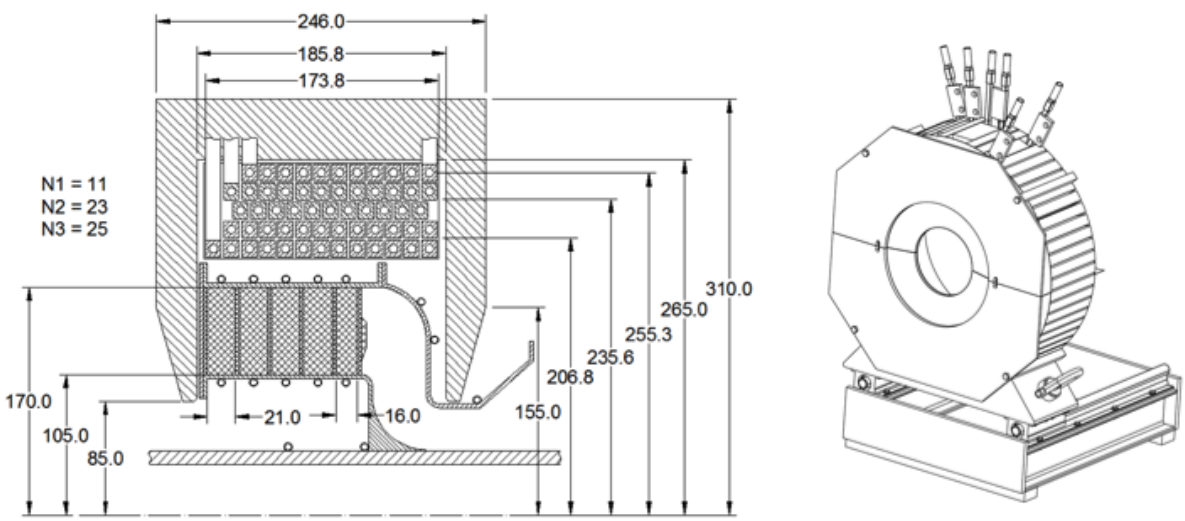

Figure 70: A cross sectional view of the bias solenoid and the tuner. All dimensions are in millimeters.

The winding is made of three coils. Depending on the chosen scheme to power the magnet, the coils can be connected in series or independently. In our design, the three coils are connected in series for a total of 59 turns. The coils are made from 10.4 mm square copper wire with 5.8 mm diameter cooling channel. The calculated resistances of the coils are shown in Table 5. The inductances of the coils in series as a function of DC bias for two different coil excitations are shown in Figure 71. In particular, the inductance of the coils when they are biased at 100 A which is close to injection is 4.7 mH. (These results are from document `Bias_System_Parameters.docx` dated 20 Jul 2017, and private communications dated 08, 09 Aug 2017).

The DC current at injection is 139 A into 59 turns (8200 A·turns) so that the tuner is biased for a resonant frequency of 75.7 MHz.

Winding	Number of turns	Resistance (mΩ)
1a, 1b	11	4.5
2a, 2b	23	8.8
3a, 3b	25	8.3

Table 5: Calculated resistance of the windings. Winding 1 consists of two coils 1a and 1b which will be electrically connected in series together with Winding 2 (coils 2a, 2b) and Winding 3 (coils 3a, 3b).

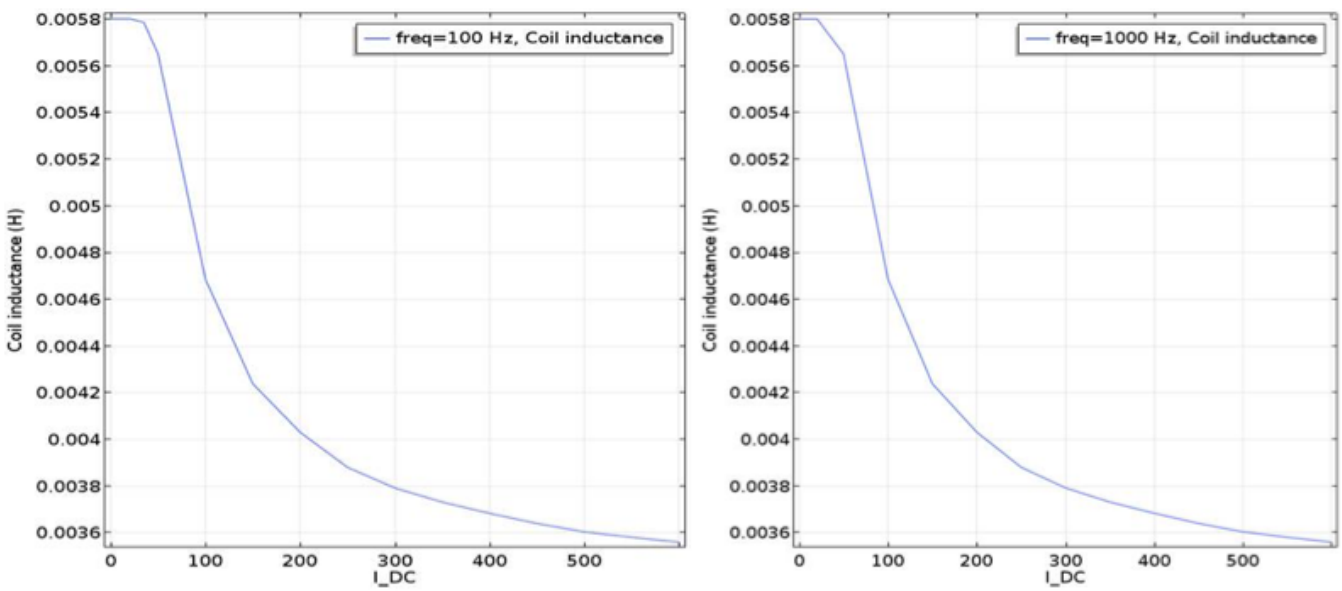

Figure 71: The inductance of the coils connected in series for two different coil excitations. These results show that the inductance is independent of the way the coils are excited.

9.1 The current ramps

The required solenoid (59 turns) current ramps for the cavity to operate a injection, transition and extraction are shown in Figure 72. The maximum dI/dt and inductive voltages at these three breakpoints are summarized in Table 6. Note that the current ramp will follow some curve outside these regions in order to make sure that the revolution harmonics do not land on the fundamental or HOM resonances.

Booster breakpoint	Maximum dI/dt (kA/s)	Maximum inductive voltage
Injection	16	80
Transition	17	70
Extraction	1	3

Table 6: Maximum parameters in the three Booster break points.

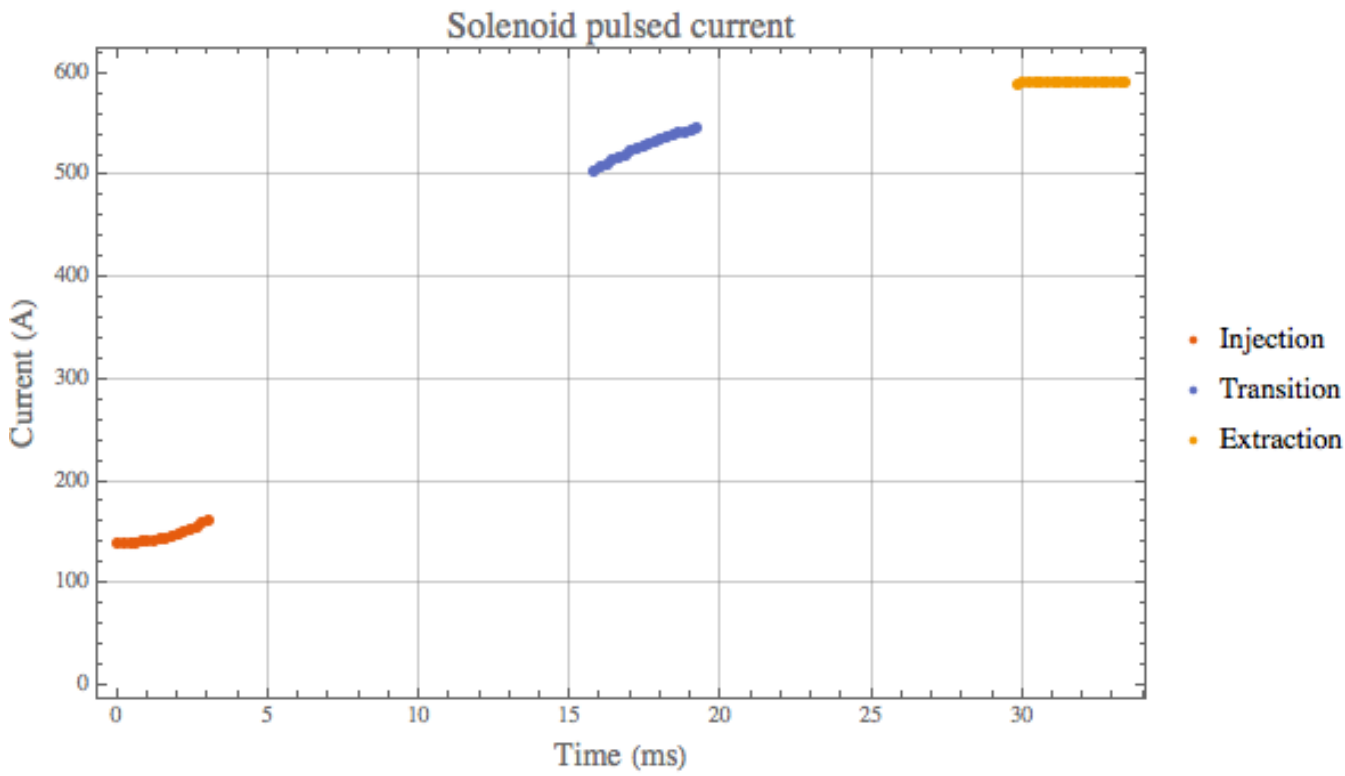

Figure 72: The current pulses required to bias the garnet. These current values assume that the solenoid has 59 turns. The current ramp outside these regions are not shown here. The exact ramp will be determined operationally.

9.2 Coil heating and cooling requirements

The coils will need to be cooled because heat will be generated by the current ramp. Using the fictitious ramp shown in in Figure 73, the power loss in the windings is 4.1 kW (derived below). This is a lot of power and so cooling of the windings is imperative. The exact current ramp need only be known in the three regions shown in Figure 72. The current outside these regions will be determined operationally to keep the revolution harmonics of the beam outside the fundamental and the HOM resonances. A fictitious current ramp shown in Figure 73 models the required ramp with sufficient precision for our thermal analysis.

The fictitious current ramp starts from 139 A at injection and rises linearly in 20 ms to 592 A. It stays constant until $T_{\text{pulse}} = 66$ ms before linearly ramping down to 139 A. The rms current,I_{rms}, for this ramp is simply

$$I_{\text{rms}} = \sqrt{\frac{1}{T_{\text{pulse}}} \int_0^{T_{\text{pulse}}} I_{\text{rms}}^2(t)\, dt} = 435 \text{ A} \tag{10}$$

where $I_{\text{pulse}}(t)$ is the current pulse shown in Figure 73.

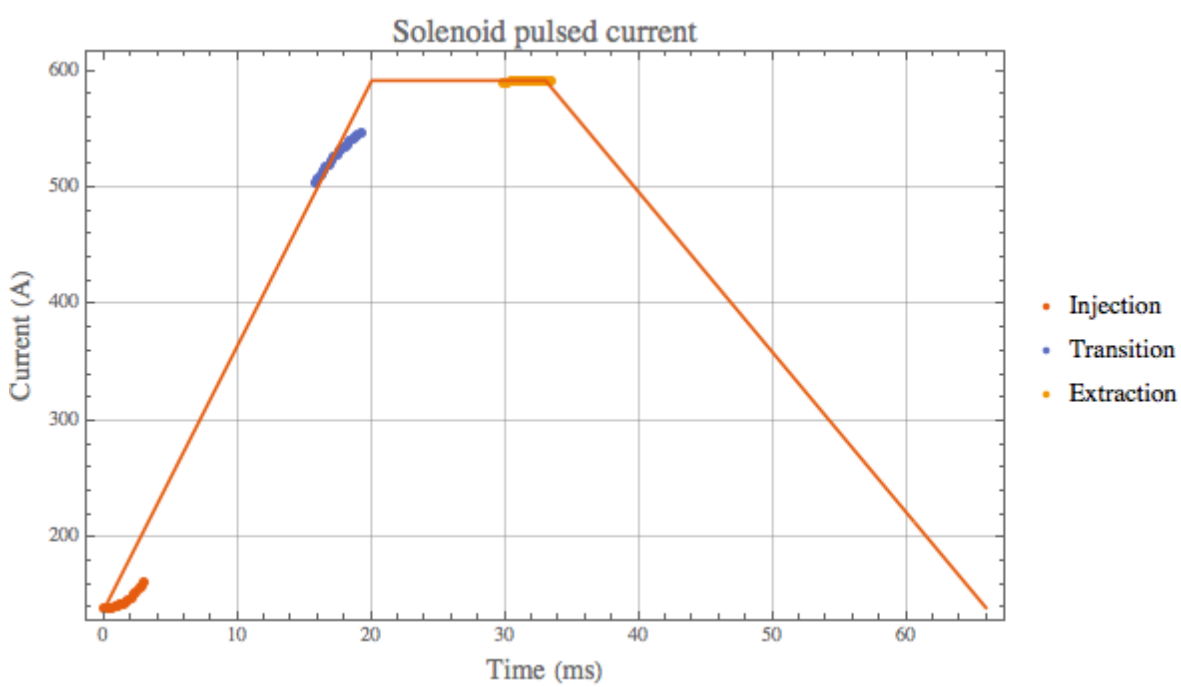

Figure 73: A fictitious ramp for the purpose of calculating the heating and required cooling of the coils. The required ramps for injection, transition and extraction are superimposed onto the fictitious ramp.

The resistance of the coils is the sum of the resistances in series from Table 5 and is $R_c = 21.6$ mΩ. Thus, the rms power, P_{rms}, deposited in the coils from the fictitious ramp is

$$P_{\text{rms}} = I_{\text{rms}}^2 R_c = 4.1 \text{ kW} \tag{11}$$

9.2.1 Flow rate

We can use the specific heat formula to calculate the energy required to raise the temperature of water by ΔT. If we assume that the water temperature rise is $\Delta T = 10°\text{C}$, then we have

$$\Delta E = mc_p \Delta T = 4.1 \text{ kJ in 1 second} \tag{12}$$

where m is the mass of water in kg, $c_p = 4.1813 \times 10^3$ J/kg/K is the specific heat of water at constant pressure. Solving for m, we get $m = 0.1$ kg. The volume, V, of water that corresponding to this mass in 1 second is

$$V = \frac{m}{\rho} = \frac{0.1[\text{kg/s}]}{1000[\text{kg/m}^3]} = 0.1\times10^{-3} \text{ m}^3/\text{s} \tag{13}$$

where ρ is the density of water. Thus the flow rate, f, is

$$f = 0.1\times10^{-3} \text{ m}^3/\text{s} = 0.1 \text{ L/s} = 6 \text{ L/min} \tag{14}$$

which is quite large for only 1 cooling channel with a narrow cross-sectional area.

9.2.1.1 3 cooling channels in parallel

The way the coils will be wound and connected, it is possible to have 3 cooling channels connected in parallel (but electrically in series). If we have 3 cooling channels then the cross-sectional area is increased by 3. Therefore, for a hole in the wire that has a diameter $d = 5.8$ mm, the cross-sectional area is

$$a = \pi(d/2)^2 = 0.26 \times 10^{-4} \text{ m}^2 \tag{15}$$

And by using 3 channels, the cross-sectional area is increased by this factor

$$a3 = 3 \times (0.26 \times 10^{-4})[\text{m}^2] = 0.8 \times 10^{-4} \text{ m}^2 \tag{16}$$

From the above, we can calculate the velocity of water and it is

$$v = \frac{V}{a3} = 0.1\times10^{-3} \left[\frac{\text{m}^3}{\text{s}}\right] / 0.8 \times 10^{-4}[\text{m}^2] = 1.2 \text{ m/s} \tag{17}$$

We can calculate the required differential pressure, Δp, that generates v. We do this by using the following formula is used at Technical Division for calculating the required water pressure [39]

$$\Delta p = \frac{v^2 L}{2d^{1.33}} \tag{18}$$

where Δp is the differential pressure in atm, v is the velocity of the water in m/s, L is the length of the pipe in m, and d is the diameter of the pipe in mm. When we substitute in the numbers we had shown above and set $L = 22$ m, we have

$$\Delta p = \frac{(1.2\ [\mathrm{m/s}])^2 (22\ [\mathrm{m}])}{2(5.8\ [\mathrm{mm}])^{1.33}} = 1.6\ \mathrm{atm} = 23.5\ \mathrm{psi} \tag{19}$$

Therefore, cooling of the coils is easily done.

9.3 The poles and flux return

The flux return of the solenoid (the detailed analysis of the flux return can be found in [40]) both closes the magnetic circuit and reduces fringe fields. Since the solenoid will have to ramp at 15 Hz, the flux return has to be laminated to minimize both Eddy current heating and its impact on the bias magnetic field. We have selected M15 silicon steel sheets that are 0.025″ thick to be the flux return material. Its magnetization curve is shown in Figure 74.

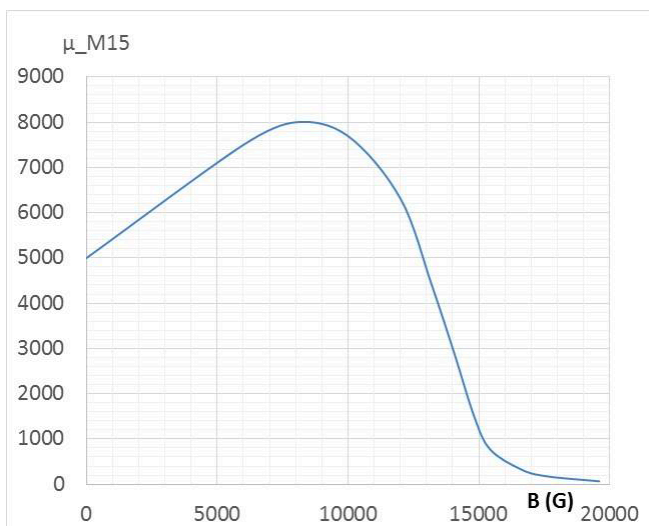

Figure 74: M15 silicon steel magnetization curve.

Both 2D and 3D modeling of the flux return were done. It was necessary to perform a 3D analysis of the poles and flux return because they are made from stacks of laminated steel and there are gaps between the stacks that cannot be accounted for in the 2D model. Figure 75 shows the configuration of the flux return and the poles and the 3D COMSOL model used to calculate the bias magnetic field.

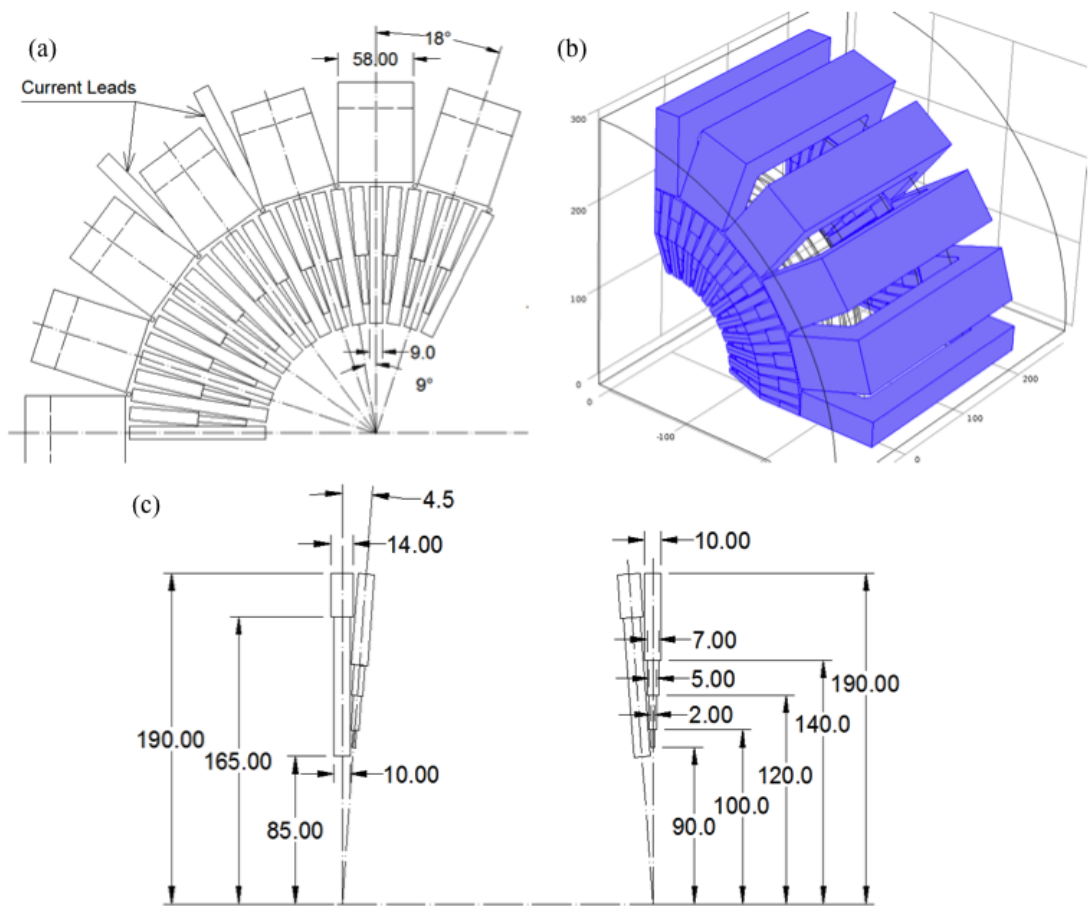

Figure 75: (a) and (c) show the cross-sectional views of the flux return and poles and the laminations. (b) is the 3D COMSOL model.

Figure 76 shows the map of the flux density in the flux return at the maximum current in two planes: the inner surface of the pole and the longitudinal cross section at zero degrees. The geometry of the laminations was chosen to avoid saturation at high current. At the design stage, further optimizations of the flux return were made with the goal of simplifying its fabrication and assembly.

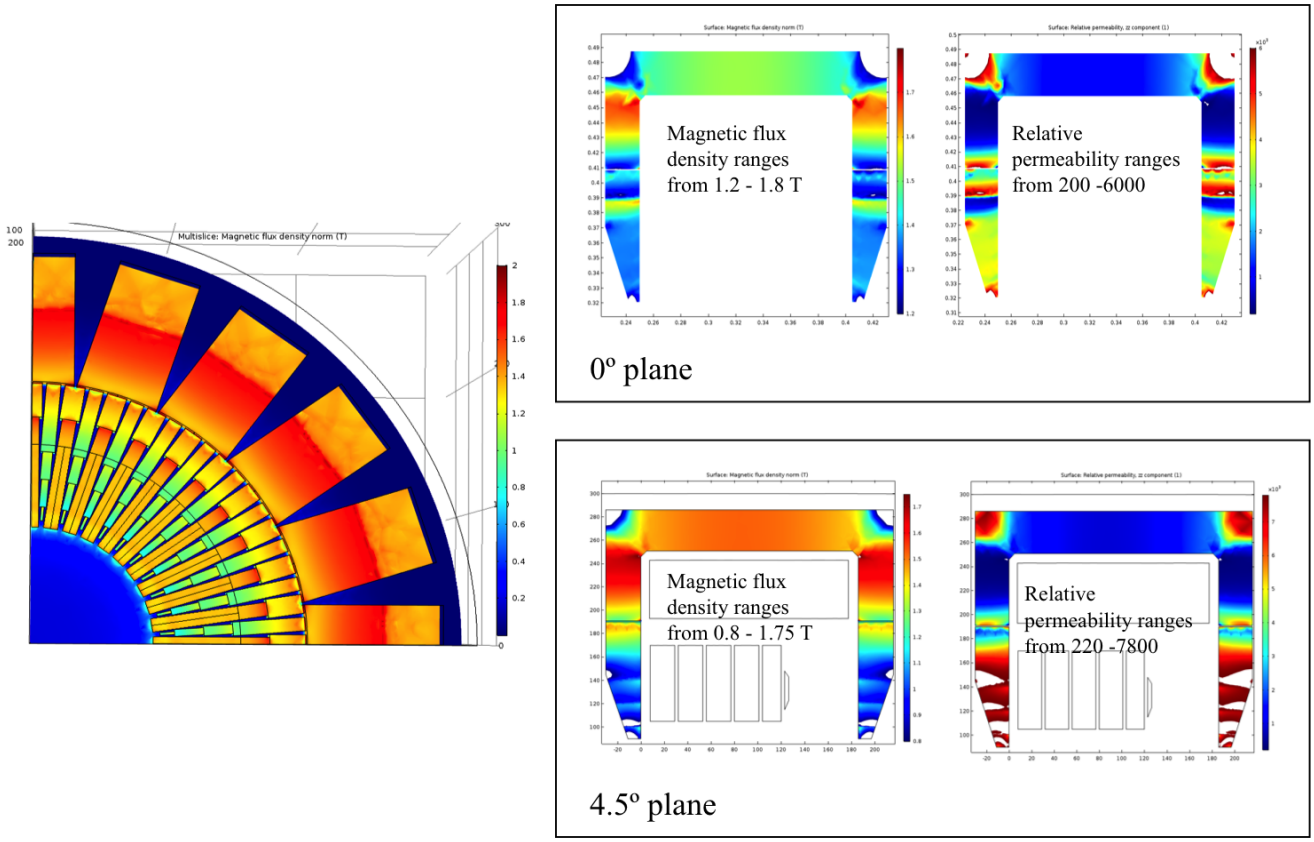

Figure 76: The magnetic flux density at high field is shown on the left. The flux returns in two planes are shown on the right.

9.4 Effect on the tuning stack

The effect on the permeability and bias magnetic field in the tuner stack at the maximum current before the flux return saturates is shown in Figure 77. At this bias current, the average permeability is significantly lower than the permeability required for the cavity to be resonant at transition, i.e. at 104.86 MHz.

At injection, the permeability and bias magnetic field in the garnet for the cavity to be resonant at 75.73 MHz is shown in Figure 78. And since the gyromagnetic resonance at 75 MHz is about 32 Oe, this calculation shows that the all low field regions in the tuner are still far away from the gyromagnetic resonance condition.

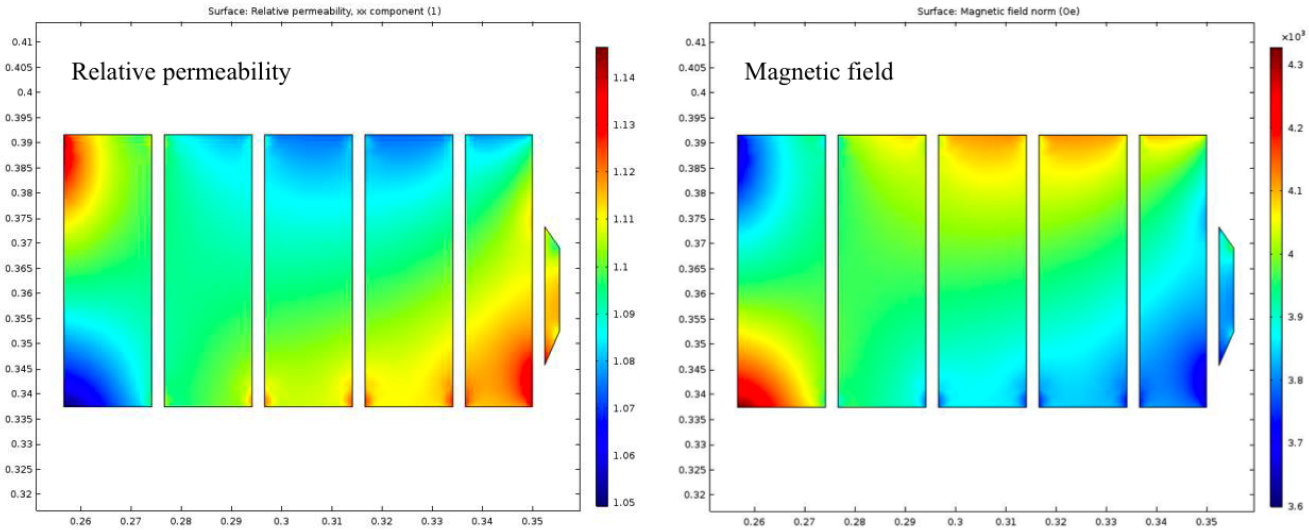

Figure 77: The relative permeability and bias magnetic field in the tuner at the maximum current in the solenoid before the flux return saturates.

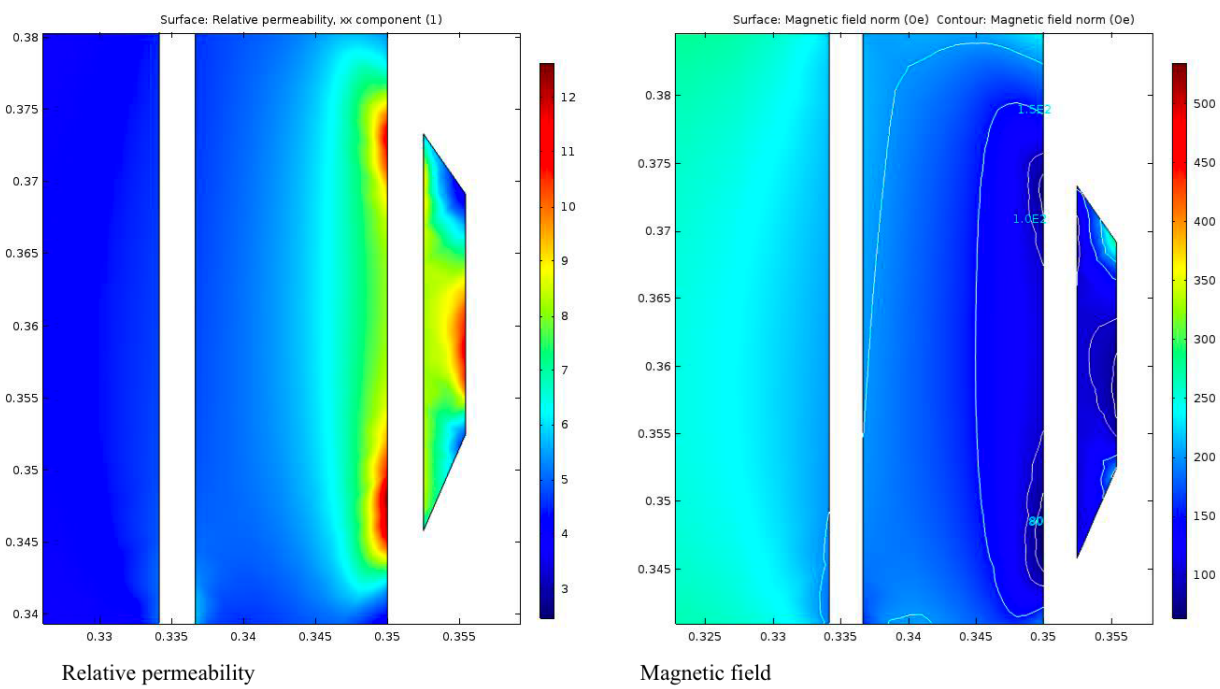

Figure 78: The relative permeability and bias magnetic field in the tuner at low field for injection. The magnetic field levels are 80, 100, 150 and 200 Oe for the contour plot on the right.

10 Bias solenoid power supply (M. Kufer)

Hello world

10.1 Bias ramp for operating at injection only (C.Y. Tan)

Due to funding constraints in FY2018, our cavity will only be "on" during injection for the first 3 ms. Therefore, for the rest of the ramp, the bias ramp has to be "parked" so that its fundamental resonance and HOMs lie between revolution harmonics as much as possible or to not be at any revolution harmonic for very long.

Our initial choice was to "park" the fundamental resonance at the "flat" part of the frequency ramp. Figure 79 shows a plot of several revolution harmonics as they evolve during the ramp. We can see that the flattest part of the frequency is after about 20 ms. The range of revolution harmonics that are available to us for parking is between 120th to 129th revolution harmonic. Higher revolution harmonics, like 130th, are unavailable to us at this time because of the constraints on the bias power supply.

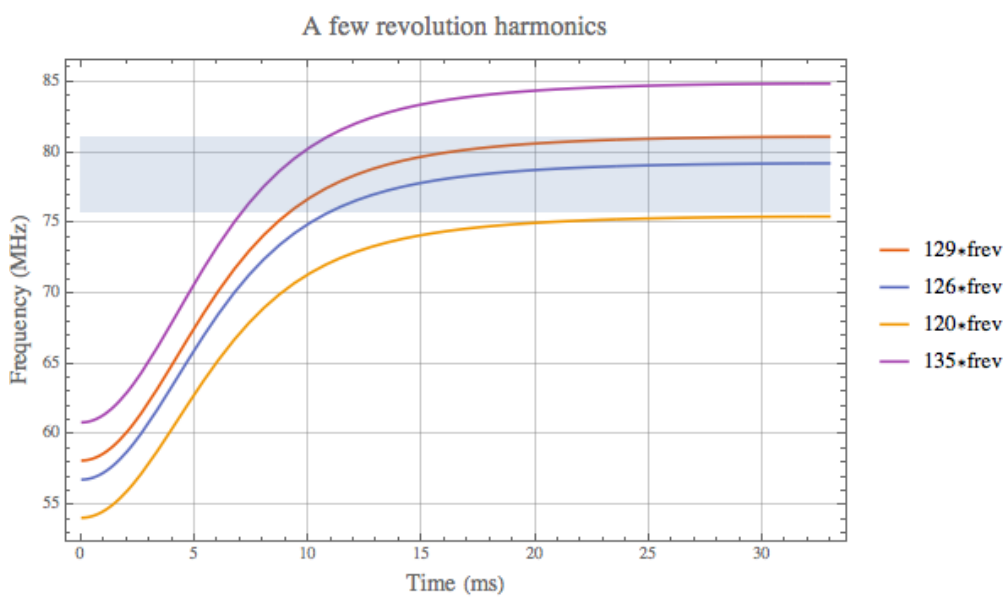

Figure 79: Plotted here are several multiples of the revolution frequency, frev. The shaded region is the range of frequencies that are allowed from the capabilities of the bias power supply. The flattest part of the frequency curve is above 20 ms.

Unfortunately, "parking" after 20 ms at around 78 MHz mid-way between 76 MHz and 81 MHz was deemed to be too close to the HOM resonance of the fundamental cavities. This resonance was the source of the coupled bunch mode instability at high field and so we decided not to use the parking scheme. So instead of parking, we will linearly ramp down the frequency back to 76 MHz.

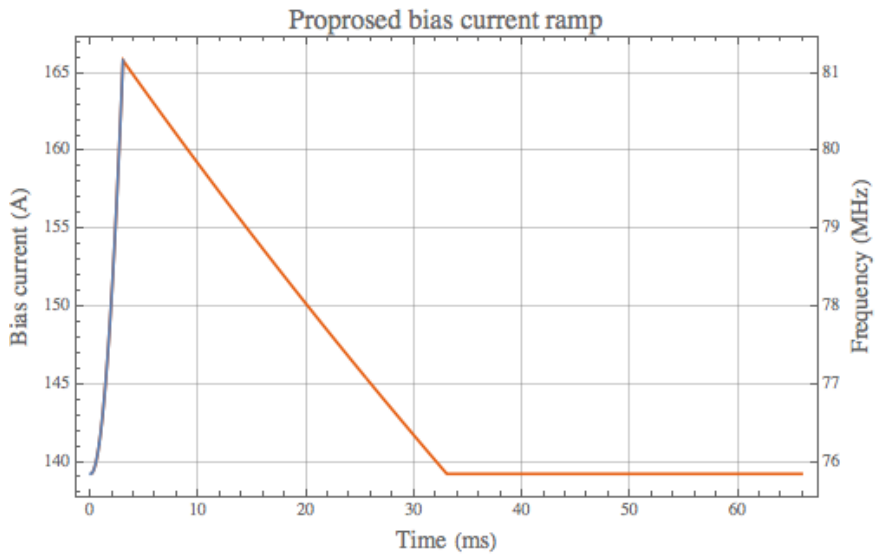

Figure 80: The proposed bias current and frequency ramp. The first 3 ms of the ramp must faithfully be 2× the fundamental.

The proposed current and frequency ramps are shown in Figure 80. We will faithfully follow the required frequency ramp that must be twice the fundamental frequency from 0 to 3. We will then linearly ramp down from 3 ms to 33 ms to the injection frequency 76 MHz and sit there until the beam is re-injected at 66 ms.

Note that the bias supply has a finite bandwidth and so the high frequency components of the current cannot be reproduced, i.e. all the sharp changes in current will roll off. The way that we plan to compensate for the roll off is to pre-shape the current ramp so that current output of the power supply will reproduce the required ramp especially between 0 to 3 ms. If we suppose that the bandwidth of the power supply is 1 kHz, our proposed pre-shaped current ramp is shown in Figure 81. After going through a 1 kHz low pass filter, the required current curve is recovered from 0 to 3 ms. But there is some overshoot after 3 ms that we can tolerate.

10.1.1 RMS current of the bias ramp

The rms current of the bias current ramps shown in Figure 80 and Figure 81 is 150 A. This current is within the specifications of the bias power supply.

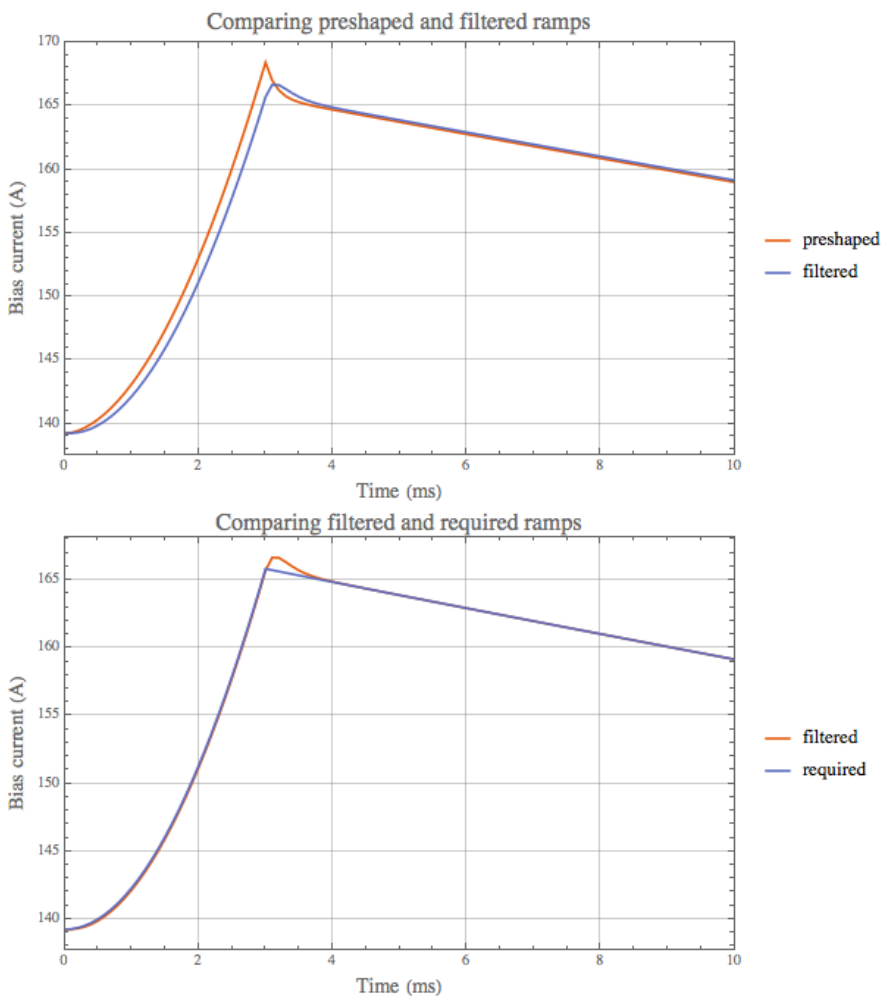

Figure 81: The current has to be preshaped so that after it passes through a bias supply that has a 1 kHz bandwidth, the output current has the required profile between 0 and 3 ms. There is a small overshoot of the current after 3 ms that can be tolerated.

11 Phase locked loop (C.Y. Tan)

A phase locked loop (PLL) is required to keep the RF at the correct point of the cavity phase when both the RF frequency and the cavity resonance are ramped. The block diagram of the PLL is shown in Figure 82.

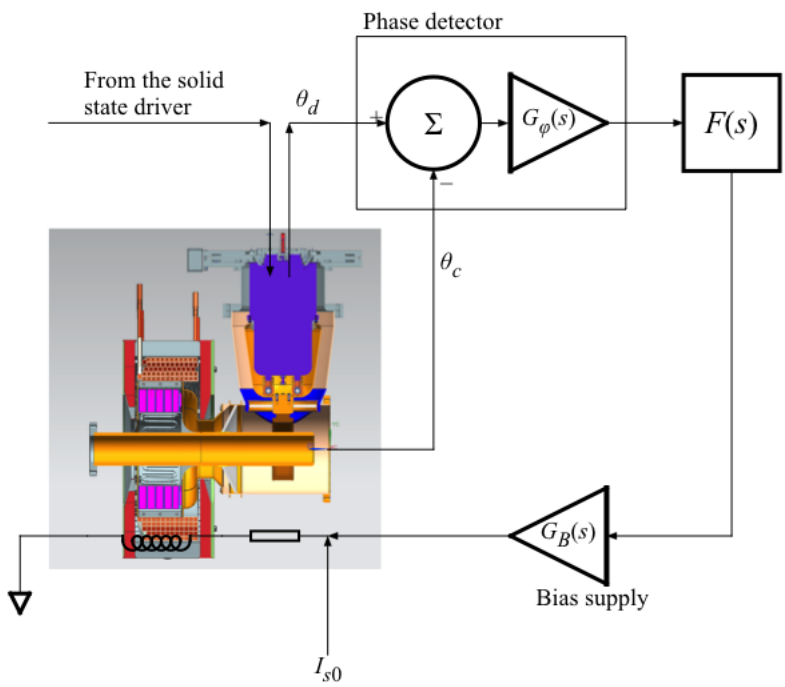

Figure 82: This is the block diagram of the PLL. There is a bias current I_{s0} that flows into the solenoid so that it always biased even when $(\theta_d - \theta_c)$ is zero.

In the analysis of the of the PLL model, the RF cavity is modeled as a parallel RLC circuit. Let I_s be the current in the bias solenoid. The impedance of the parallel RLC circuit is given by

$$Z_c[\Delta\omega, I_s] = \left(\frac{1}{R_c(I_s)} + \frac{1}{i\omega L_c(I_s)} + i\omega C_c(I_s)\right)^{-1} \tag{20}$$

where the shunt impedance, R_c, the cavity inductance L_c and capacitance C_c have explicit dependence on the bias current I_s. The above can be linearized to give

$$Z_c[\Delta\omega, I_s] \approx \frac{R_c(I_s)}{1 + 2Q_c(I_s)\Delta\omega/\omega_c(I_s)} \approx R_c\left(1 - i2Q_c\frac{\Delta\omega}{\omega_c}\right) \tag{21}$$

where $\omega_c = 1/\sqrt{L_c C_c}$, $\Delta\omega/\omega_c \ll 1$, and $Q_c = \omega_c R_c C_c$. And thus the linearized phase of the cavity impedance is

$$\arg\,[Z_c] = -\tan\left[2Q_c\frac{\Delta\omega}{\omega_c}\right] \approx -2Q_c\frac{\Delta\omega}{\omega_c} = -2R_c C_c \Delta\omega \tag{22}$$

In the time domain, how the cavity shifts the drive phase can be seen with the following equation

$$\theta_c(t; I_s) = \theta_d(t) - 2R_c(I_s)C_c(I_s)\big(\dot{\theta}_d(t) - \dot{\theta}_s(t; I_s)\big) \tag{23}$$

where θ_d and $\dot{\theta}_d$ are the phase and frequency of the drive applied to the cavity, and $\dot{\theta}_s$ is the resonant frequency of the cavity when the solenoid current is at I_s. The above can be further simplified for analysis if the following approximations are adopted

1. Both R_c and C_c are constant in the small range around the resonant frequency, $\dot{\theta}_{s0}$, of the cavity when the bias current is at I_{s0}.
2. If $K_d = d\dot{\theta}_d/dI_d$ then $\dot{\theta}_d(t) - \dot{\theta}_{s0} \approx K_d(I_d(t) - I_{s0})$.
3. With the above approximation for the slope, any frequency close to I_{s0} is given by $\dot{\theta}(I) = \dot{\theta}_{s0} + K_d(I - I_{s0})$.

Thus, by using the above approximations, Eq. (23) can be further simplified. It becomes

$$\theta_c(t; I_s) = \theta_d(t) - 2R_c C_c K_d(I_d(t) - I_s(t)) \tag{24}$$

In Laplace space, the above becomes

$$\Theta_c(s) = \Theta_d(s) - 2R_c C_c K_d(\tilde{I}_d(s) - \tilde{I}_s(s)) \equiv \Theta_d(s) - \mathcal{H}_c(\tilde{I}_d(s) - \tilde{I}_s(s)) \tag{25}$$

where $\mathcal{H}_c$ is the transfer function that relates how the cavity shifts the phase of the drive for a given change in bias current.

11.1 Output of phase detector and the transfer function of the PLL

The output of the phase detector in Laplace space is

$$\Theta_\varphi(s) = G_\varphi \Delta\Theta_d(s) \tag{26}$$

where G_φ has units of V/rad. And then through the rest of the block diagram up to the solenoid, the output voltage is

$$\tilde{V}_s = G_B F G_\varphi \Delta\Theta_d \tag{27}$$

At the solenoid, the bias current is

$$\tilde{I}_s = \tilde{I}_{s0} + \frac{G_B F G_\varphi \Delta\Theta_d}{sL_s + R_s} \tag{28}$$

where $\tilde{I}_{s0}$ has been added so that when $\Delta\Theta_d = 0$, there is current in the solenoid that keeps the resonance at $\dot{\theta}_{s0}$. When the above is substituted into Eq. (25), the amount the drive phase is shifted by the cavity resonance is

$$\Delta\Theta_d = 2R_c C_c K_d \left(I_d - I_{s0} - \frac{G_B F G_\varphi \Delta\Theta_d}{sL_s + R_s} \right) \tag{29}$$

In the simplified model described above,

$$\dot{\theta}_d = \dot{\theta}_{s0} + K_d (I_d - I_{s0}) \equiv \omega_0 + K_d (I_d - I_{s0}) \tag{30}$$

The ω_0 is troublesome, but is neglected in all VCO analysis (see For example Best [41] page 15). If this term is neglected, the phase variation of the drive is

$$\Delta\theta_d = \int_{-\infty}^{t} K_d [I_d(\tau) - I_{s0}(\tau)]\, d\tau \tag{31}$$

which has the Fourier transform

$$\Theta_d = \frac{K_d}{s} (\tilde{I}_d - \tilde{I}_{s0}) \;\; \Rightarrow (\tilde{I}_d - \tilde{I}_{s0}) = \frac{s\Theta_d}{K_d} \tag{32}$$

if $\Delta\theta_d(t = 0) = 0$.

After some algebra, the phase error between the cathode and anode is found to be

$$\Delta\Theta_d = \Theta_d - \Theta_c = \frac{2\tau_c Z_s s}{Z_s + 2\tau_c F G_B G_\varphi K_d} \Theta_d \tag{33}$$

Where $\tau_c = R_c C_c$ and $Z_s = sL_s + R_s$.

11.2 Loop performance analysis

In this section, the loop performance is analyzed. In order to proceed, the proportional-integral (PI) filter is chosen to be the loop filter so that a pole is introduced into the feedback loop. The PI filter is

$$F(s) = \frac{1 + s\tau_2}{s\tau_1} \equiv F'(s)/s \tag{34}$$

where τ_1 and τ_2 are the RC time constants that determine the shape of the filter response.

11.2.1 Phase step applied to Θ_d

When there is a drive phase step, $\Delta\Phi$, in the drive

$$\Theta_d = \Delta\Phi/s \tag{35}$$

By using Eq. (33),

$$\Delta\Theta_d = \frac{2\tau_c Z_s s^2}{sZ_s + 2\tau_c F' G_B G_\varphi K_d}\left(\frac{\Delta\Phi}{s}\right) \tag{36}$$

and applying the final value theorem to the above

$$\Delta\theta_d(t = \infty) = \lim_{s\to 0} s\Delta\Theta_d(s) = 0 \tag{37}$$

Thus, the phase step error approaches zero as $t \to \infty$.

11.2.2 Frequency step applied to Θ_d

When there is a frequency step, $\Delta\omega$, in the drive

$$\Theta_d = \Delta\omega/s^2 \tag{38}$$

By using Eq. (33),

$$\Delta\Theta_d = \frac{2\tau_c Z_s s^2}{sZ_s + 2\tau_c F' G_B G_\varphi K_d}\left(\frac{\Delta\omega}{s^2}\right) \tag{39}$$

and applying the final value theorem to the above

$$\Delta\theta_d(t = \infty) = \lim_{s\to 0} s\Delta\Theta_d(s) = 0 \tag{40}$$

Thus the frequency step error approaches zero as $t \to \infty$.

11.2.3 Frequency ramp applied to Θ_d

When there is a frequency ramp, $\Delta\dot{\omega}$, in the drive

$$\Theta_d = \Delta\dot{\omega}/s^3 \tag{41}$$

By using Eq. (33),

$$\Delta\Theta_d = \frac{2\tau_c Z_s s^2}{sZ_s + 2\tau_c F' G_B G_\varphi K_d}\left(\frac{\Delta\dot{\omega}}{s^3}\right) \tag{42}$$

and applying the final value theorem to the above

$$\Delta\theta_d(t=\infty) = \lim_{s\to 0} s\Delta\Theta_d(s) = 0 \tag{43}$$

Thus the frequency ramp error approaches zero as $t \to \infty$.

Therefore, in all three scenarios, the feedback loop is able to compensate for those errors and eventually reduce the phase error to zero.

11.3 PI-like filter

In real life, a PI filter is impossible to build because it has an infinite response at DC. A realizable PI filter will have a roll off. An implementation of a PI-like filter is shown in Figure 83.

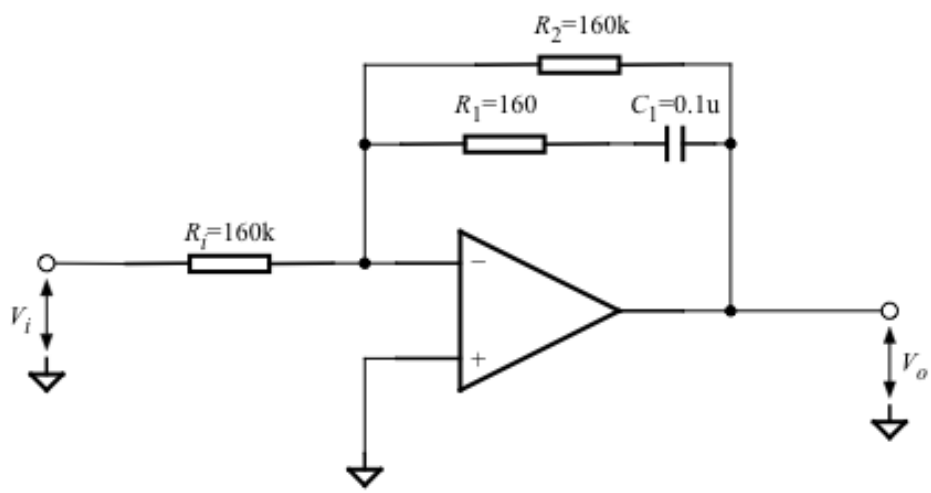

Figure 83: This is a PI-like filter that has the time constants $\tau_1 = R_1C_1 = 1.6 \times 10^{-5}$s and $\tau_2 = R_2C_2 = 0.016$ s.

The PI-like transfer function for an ideal opamp is

$$\mathcal{H}_{\text{PI-like}} = -\frac{1}{R_i\left(\frac{1}{R_2} + \frac{1}{R_1 + 1/sC_1}\right)} \tag{44}$$

The roll offs in this particular design are at $f_1 = 10$ Hz $\Rightarrow$ $\tau_1 = \frac{1}{2\pi f_1} = 0.016$ s, and $f_2 = 10$ kHz $\Rightarrow$ $\tau_2 = \frac{1}{2\pi f_2} = 1.6 \times 10^{-5}$ s. The frequency response with these values are shown in Figure 84. The PI filter response from Eq. (44) when plotted together with this curve shows that between 10 Hz and 10 kHz, the PI-like filter acts like a PI filter and hence like an integrator.

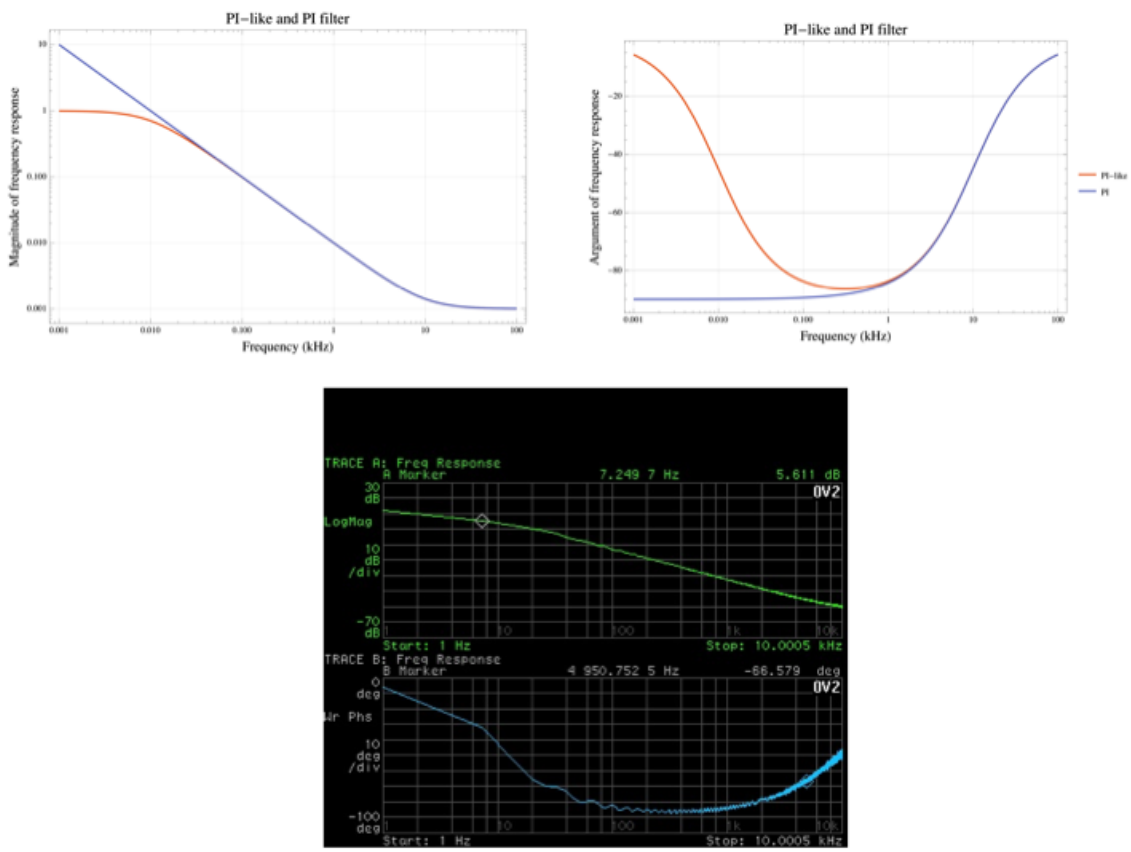

Figure 84: The PI-like and PI filter frequency responses that have the time time constants $\tau_1 = R_1C_1 = 1.6 \times 10^{-5}$s and $\tau_2 = R_2C_2 = 0.016$ s. The measured frequency response of an implementation of the PI-like filter shown in Figure 83 is also shown here. The behavior of the implementation is very similar to the theory.

11.4 Time domain analysis

In the time domain analysis, the goal is to determine the tracking error of the PLL during the ramp. The maximum loop error that is allowed comes from the available rms power from the PA. Therefore, given the maximum power $P_{\max}$ of the PA, the minimum allowable impedance can be found with the formula

$$P_{\max} \geq \frac{V_{\max}^2}{2R_{\min}} \tag{45}$$

If the maximum available power $P_{\max} = 100$ kW and the required gap voltage is 100 kV, then the minimum shunt impedance $R_{\min} = 50$ kΩ.

11.4.1 Allowable frequency error at injection

The first 3 ms at injection, the frequency sweep of the cavity is from 76 MHz to 81 MHz. The Q and shunt impedances of these two frequencies are summarized in Table 7.

Frequency (MHz)	Q_c	R_c (kΩ)	Max allowable freq error (kHz)
76	3200	92.75	±10.9
81	3800	110	±10.9

Table 7: The start and end point Q and shunt impedance for the first 3 ms of the ramp.

By using the linearized form of the cavity impdance from Eq. (21), the maximum allowable frequency error $\Delta f_{\max}$ from resonance given $R_{\min}$ is

$$R_{\min} = \mathrm{Re}\left[\frac{R_c}{1 + i2Q_c\,\Delta f_{\max}/f_c}\right] \tag{46}$$

Using the above formula and the numbers from Table 7, $\Delta f_{\max} = 10$ kHz when $R_{\min} = 50$ kΩ.

11.4.2 Numerical results

The shunt impedance, tuning curve and Q of the cavity calculated by MWS are shown in Figure 34. **Editor's note: The results here assume that the solenoid is divided into a DC coil with 11 turns and an AC coil with 48 turns. The actual operation of the solenoid will have all 59 turns connected in parallel.** These curves are applied to the proposed AC part of the solenoid pulsed current shown in Figure 85. The tracking and the frequency error during the first (1 + 3) ms of the frequency ramp are shown in Figure 86 for $G_B G_\varphi = 5 \times 10^3$ for the proposed AC pulsed current. The first 1 ms of the ramp

is used to settle the PLL. It is clear that the frequency error is well within the required ±10 kHz frequency error.

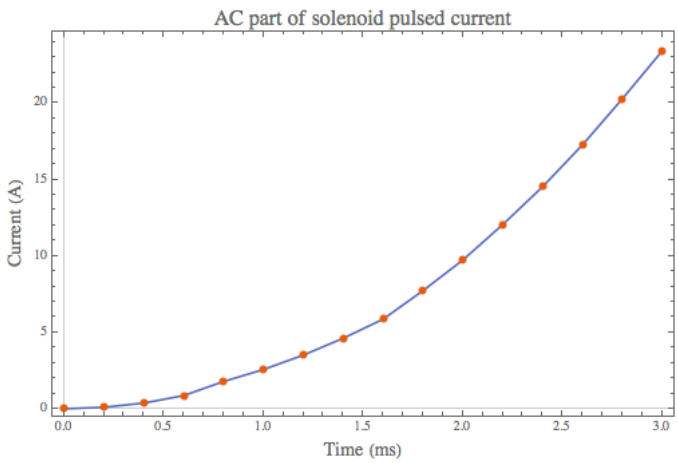

Figure 85: This is the proposed AC part of the solenoid current ramp at injection from 0 ms to 3 ms.

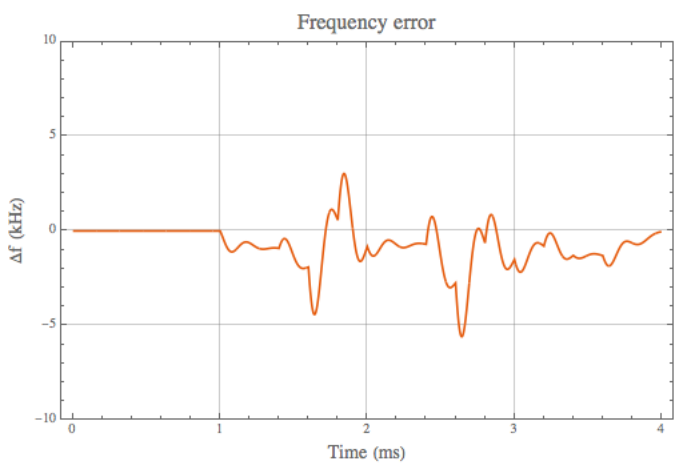

Figure 86: This is the PLL frequency error of the (1+3) ms ramp. It is well within the ±10 kHz requirement.

12 RF windows (D. Sun)

Hello world

13 Cathode resonator (R. Madrak , J. Dey, & C.Y. Tan)

A cathode resonator is required to match the output impedance of the solid-state amplifier (SSA) to the input impedance of the Y567B, which is mainly reactive due to the cathode-grid capacitance. However, due to the large frequency swing ~30 MHz requirement, the cathode resonator has to have a very low Q < 10, and thus the impedance match is far from perfect except at the peak frequency. Section 13.2 discusses the cathode resonator model that served as the starting point of the design. However, it was discovered soon after the first resonators were made that the model is too simplistic and did not adequately predict the matching impedance, and thus the VSWR. It was also found that the input capacitance of the Y567B is dependent on frequency, which was not known during the initial design stage. This meant that the size of the inductance required for resonance at the design frequency was wrong and had to be corrected in the final design. Although the model's usefulness is limited in scope, the relative changes it predicts can still be used as an aid in the "trial and error" method to arrive at the final design.

It was found that the cathode resonator, by itself, still presented a poor match to the SSA. A matching tuning stub was added between the SSA to the resonator to improve the VSWR. The details of the tuning stub are discussed in section 13.3.

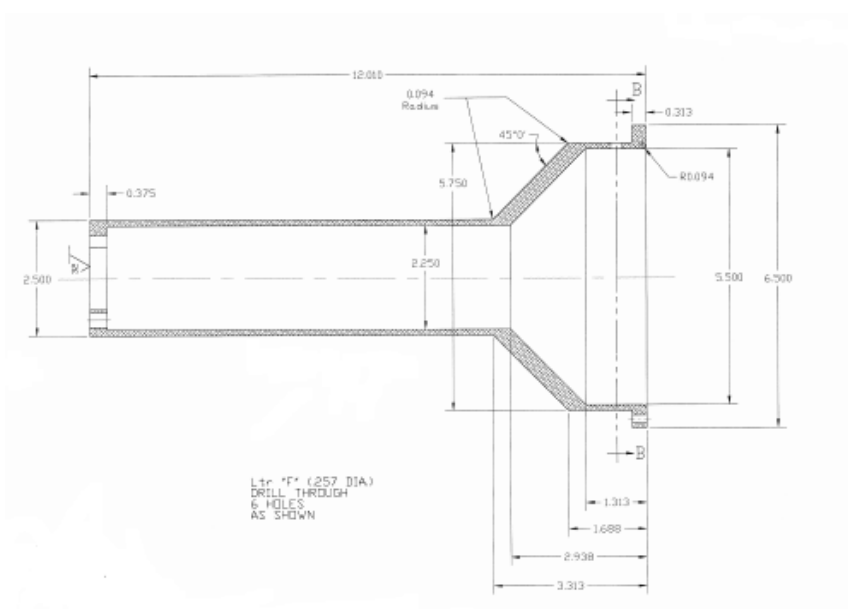

Figure 87: Center conductor of the cathode resonator for the Booster fundamental PA.

13.1 Modified Booster cathode resonator

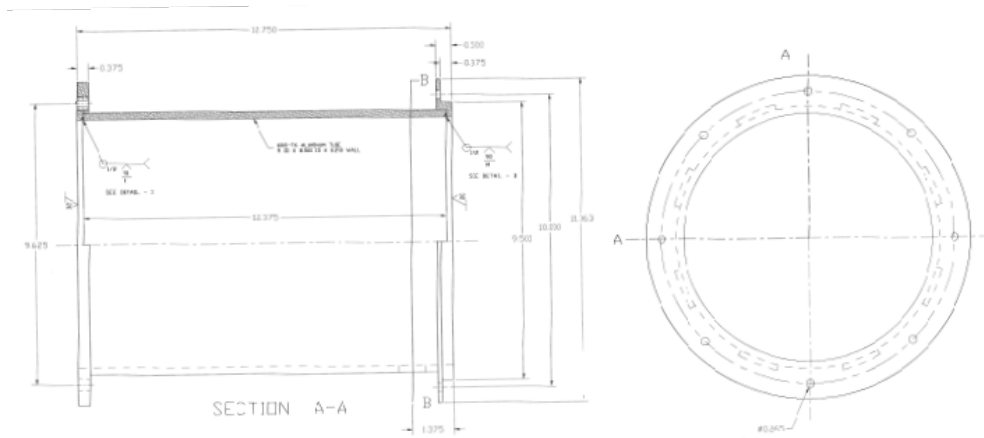

Figure 88: Outer conductor of the cathode resonator for the Booster fundamental PA.

The cathode resonator is a modified version of the fundamental Booster cathode resonator. Figure 87 shows the center conductor and Figure 88 shows the outer conductor. Since the harmonic cavities operate at a higher frequency, the inductance of the resonator must be smaller and therefore it must be shorter. A prototype version of the Booster fundamental cathode resonator was available to be modified. Both the center conductor and outer conductor were cut transversely by the same amount (to remove length), and re-welded. This is shown in Figure 89 for the center conductor.

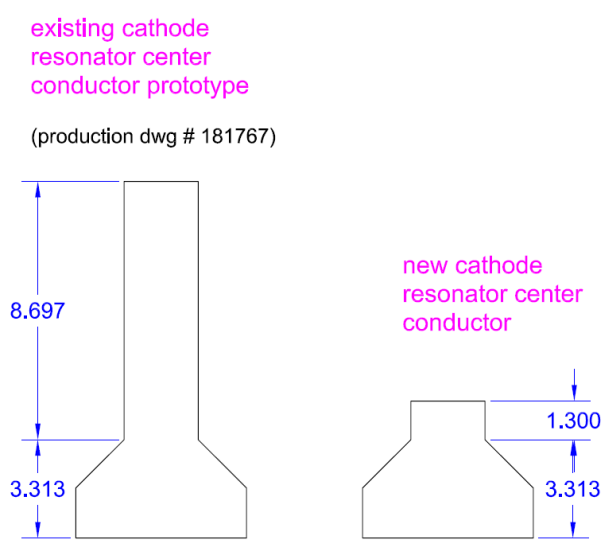

Figure 89: Modifications to the prototype Booster fundamental cathode resonator.

13.2 Cathode resonator model (R. Madrak & C.Y. Tan)

The cathode resonator model that we are using is based on the model developed by T. Berenc [42]. There are some major differences between our model and Berenc's model. The first difference is that we do not include transconductance, g_m, of the Y567B. Experimentally, we have found that $1/g_m$ in the frequency of interest is > 1 kΩ, and thus its contribution to the parallel RLC circuit is negligible when compared to the swamper resistors that contribute either 12.5 Ω or 25 Ω depending on the setup. The second difference is that we have added a series impedance, Z_b, in series with the RLC circuit. Z_b is the collective impedance of the banana plugs + adapters used to connect the solid state amplifier (SSA) to the cathode resonator. Our s11 measurements show that the banana plugs + type N to HN adapters together have a surprisingly large inductance of about 35 nH. The improved resonator model is shown in Figure 90. Although we have made a better model, and used it for our initial design, we have found that it is not very useful for absolute results. For example, the VSWR that the model calculates does not match measurement.

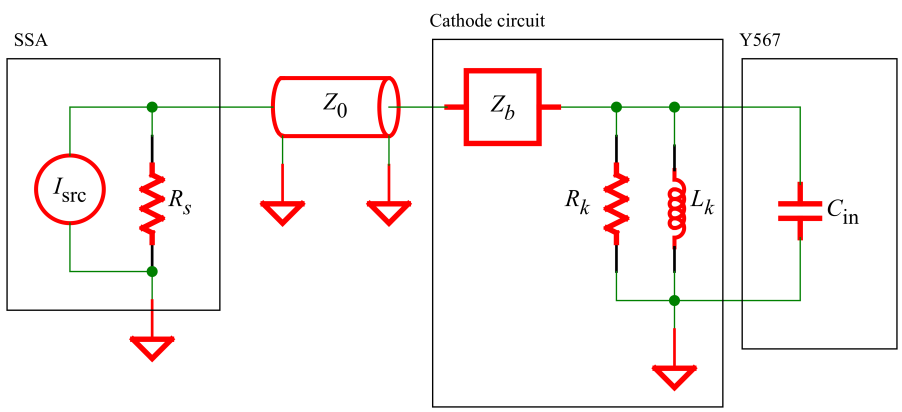

Figure 90: The resonator model for calculating the bandwidth of the cathode resonator. R_k comes from the swamper resistors, L_k is the inductance of the cathode resonator shown in Figure 89, and C_{in} is the cathode capacitance of the Y567B. Z_b is the inductive contribution from the banana plugs + adapters, Z_0 = 50 Ω is the characteristic impedance of the cable (note: In Booster fundamental cavities, Z_0 = 12.5 Ω) between the SSA and the resonator. R_s = 50 Ω is the SSA output impedance.

However, despite its shortcomings, we will continue with our analysis. The impedance of the cathode resonator shown in Figure 90 is

$$Z_c = Z_b + \frac{1}{\frac{1}{Z_{L_k}} + \frac{1}{R_k} + \frac{1}{Z_{C_{\text{in}}}}} \tag{47}$$

where $Z_{L_k} = i\omega L_k$ is the inductive impedance of the cathode resonator, and $Z_{C_{\text{in}}} = 1/i\omega C_{\text{in}}$ is the capacitive impedance at the input of the Y567B.

The input capacitance, C_{in}, has been measured as a function of frequency and is shown in Figure 91. This was done using three different cathode resonators that were connected to the Y567B for measuring the resonant frequencies. Weakly coupled probes were used in a transmission measurement (s21) so that the peak was narrow, and the resonant frequency was measured. Since the geometries of the cathode resonators are known, their inductances, L_k, are easily calculated. The Y567B input capacitance is then determined by the equation $C_{\text{in}} = \frac{1}{\omega^2 L_k}$. Since there is a large change in C_{in} in the frequency range of interest, our final choice of L_k has to be a compromise.

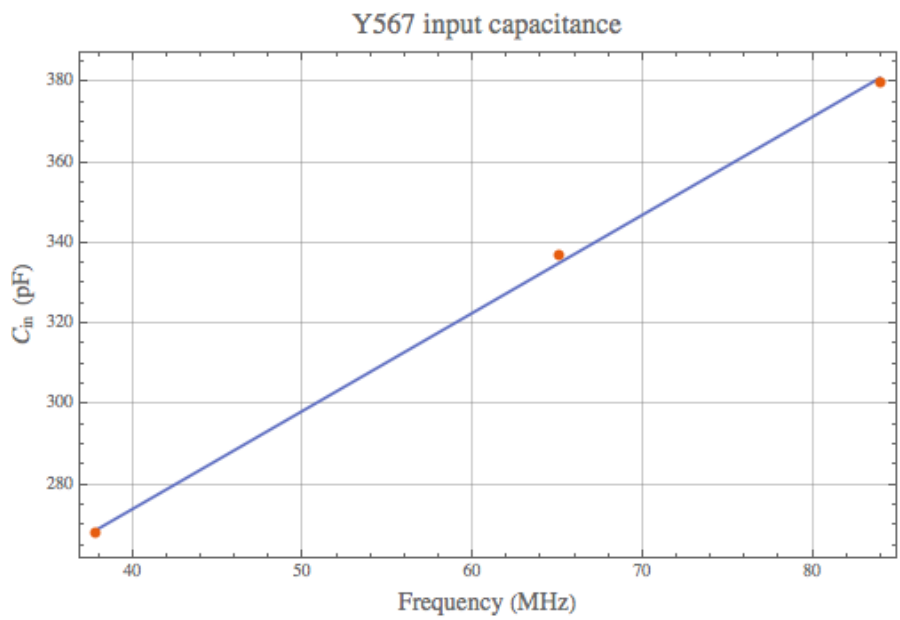

Figure 91: The measured input capacitance of the Y567B as a function of drive frequency. The red circles come from measurement.

13.2.1 VSWR example

We can use the model to calculate the VSWR so that the maximum power from the SSA is delivered to the cathode resonator. For these calculations, we will use $Z_b = i\omega \times (35 \times 10^{-9})\ \Omega$ that was obtained from measurements. We will make the cathode resonator resonate at the mid point between 76 and 106 MHz, i.e. 91 MHz. To do so, we must have $L_k = 7.6$ nH and $C_{\text{in}} = 361$ pF from Figure 91. The only variables left are the swamper resistance R_k that we can vary in integer fractions of 50 Ω and the characteristic impedance Z_0. An example of how the VSWR changes as function of these two variables is shown in Figure 92. The best VSWR is obtained when $R_k = 12.5\ \Omega$ is when $Z_0 = 25\ \Omega$.

We have to emphasize here that the model is not that useful for predicting absolute values because it is too simplistic and does not capture the true behavior of the system. For example, we have found that when $Z_0 = R_k = 12.5\ \Omega$, the VSWR ≈ 6 at both 76 and 106 MHz, although our model says that the VSWR >10 at 76 MHz and VSWR ≈ 7 at 106 MHz.

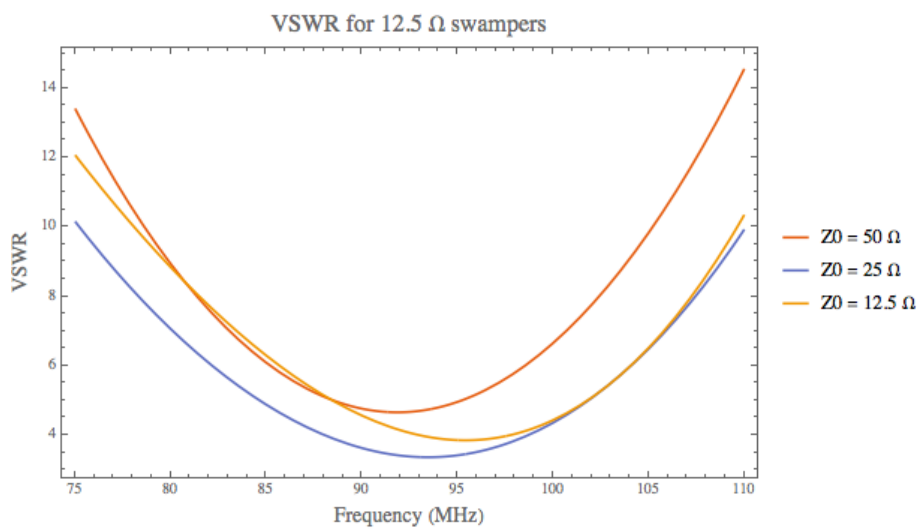

Figure 92: The VSWR calculated with the model. The VSWR predicted by the model is too pessimistic.

13.3 Matching tuning stub (J. Dey, R. Madrak & C.Y. Tan)

Note: High power tests with a newly designed cathode resonator (see section 14) demonstrated that the tuning stub is not needed. This section is left here, as is, for reference only.

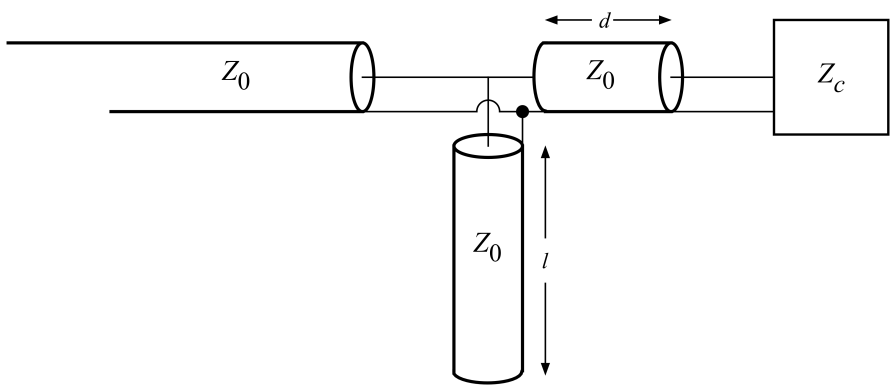

Figure 93: This is the diagram of the open tuning stub that is added before the cathode resonator Z_c for matching to Z_0. The two lengths d and l can be found so that VSWR=1 at one chosen frequency.

In order to reduce the reflected power from the cathode resonator so that the TOMCO solid-state amplifier (SSA) does not substantially de-rate (see section 13.4), it is necessary to either have a matching network or a circulator between the SSA and the cathode resonator. We choose to make an open stub tuner for matching, which is shown in Figure 93. Our requirement is VSWR ≤ 4 because this means that $\leq 36\%$ of the power is reflected. This is an acceptable limit for driving the Y567B so that it can output $>$ 100 kW. See section 13.4.

We measured the impedance of our test cathode resonator, Z_c, that has its center frequency at 94 MHz rather than at the mean frequency of $\frac{76+106}{2} = 91$ MHz. This cavity has $(4 \times 50)\ \Omega$ swamper resistors in parallel connected to it. The results are shown in Figure 95. We can use these results and together with the standard method used for tuning stub matching (for example in Pozar [19], section 5.2), to find d and l. We found that for $Z_0 = 50\ \Omega$ (see Figure 93) and choosing, by trial and error, the matching frequency, $f_0 = 105.5$ MHz, we have $d = 0.02$ m and $l = 0.59$ m (or equivalently an electrical length of 1.9 ns). The required bandwidth is 30 MHz and from our model, we have a VSWR of 3.3 at $(94 - 15) = 79$ MHz and 4.4 at $(94 + 15) = 109$ MHz. The trick that we have done here for increasing the bandwidth is that, instead of selecting f_0 to be in the middle of the required frequency range, we have chosen f_0 to be close to the outside of this range. This, then, allows the capacitive part of the length l transmission line below f_0 to cancel out more of the inductive contribution from the banana plugs + type N to HN adapters.

We have found experimentally that by starting with the d and l found from above, we can tune the stub so that the VSWR ≈ 4 with a 30 MHz bandwidth. Figure 95 is the comparison between theory and the measured VSWR of the cathode resonator with the tuning stub added. It is clear from this figure that we have the required bandwidth and the VSWR is better at 109 MHz and worse at 79 MHz. Our final cathode resonator with the correct center frequency and a high power tuning stub will need to be tuned so that the required VSWR ≤ 4 occurs at both 76 MHz and 106 MHz.

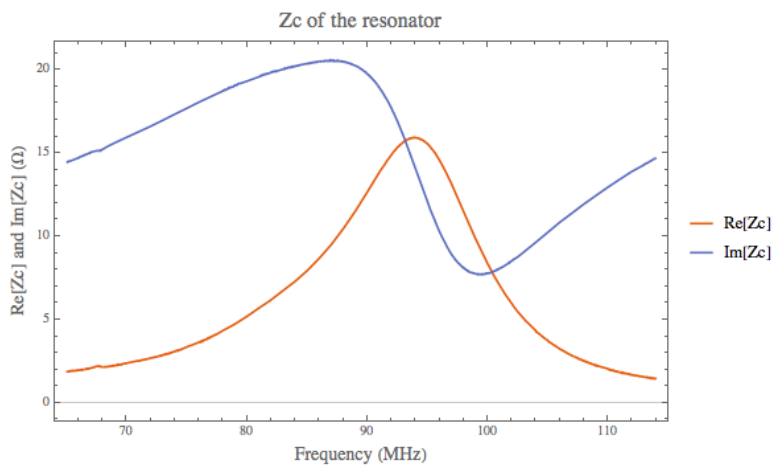

Figure 94: The impedance of the test cathode resonator with (4×50 Ω) swamper resistors in parallel. It resonates at 94 MHz.

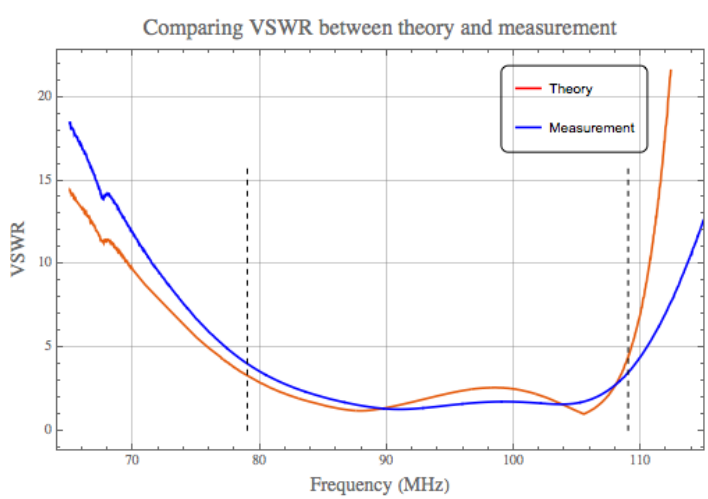

Figure 95: The measured VSWR versus the theoretical VSWR that has center frequency at 94 MHz. The dotted vertical lines indicate the locations of (94–15) MHz and (94+15) MHz. The measured VSWR at these two locations is approximately 4.

13.3.1 The matching tuning stubs

The low power matching tuning stub is shown in Figure 96. The open end of the tuning stub l consists of one 1 ns cable + 4 bullets + 4 barrels which together gives 1.8 ns of electrical length. This is about the same electrical length of 1.9 ns that was calculated in the previous section. Decreasing the length of the RF connection to about 0.06 ns (i.e. half a BNC tee because we will assume that the "parallel" connection happens in the middle of the tee), which was also calculated from the previous section, at the resonator itself increases the bandwidth of the match. This decrease was achieved by replacing the original HN connector with a BNC connector. The swamper resistance in this case is 12.5 Ω.

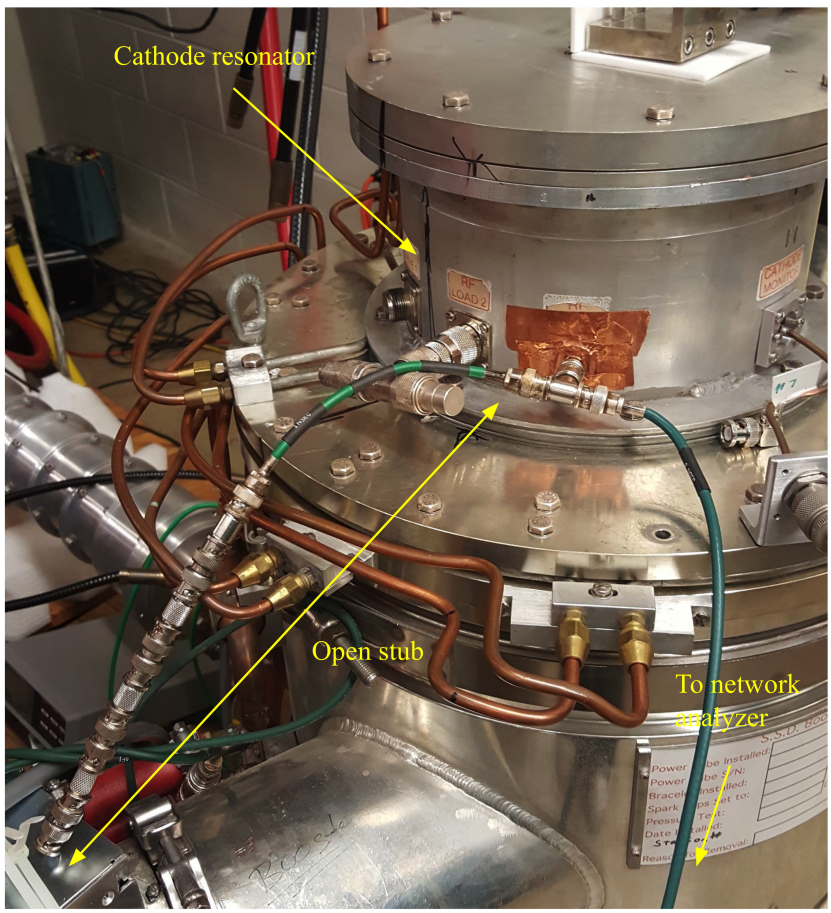

Figure 96: The low power open tuning stub. The open end of the stub consists of one 1 ns cable and 4 bullets + 4 barrels to give 1.8 ns of electrical length.

13.4 TOMCO SSA de-rate table

The TOMCO SSA de-rates from 8 kW as a function of VSWR [43]. However, the amplifier does not limit output unless the amount of reflected power is above the threshold for 2 seconds, for which it can withstand 100% reflected power at full output. Since we operate in pulsed mode with pulse widths substantially less than 2 seconds, this situation will never be realized. See section 14.

Forward power degradation (VSWR)	Percent of full power
1	100
1.5	100
2	80
3	60
5	40
10	30
∞	20

Table 8: TOMCO SSA de-rate table. The SSA is capable of supplying 8 kW at full power.

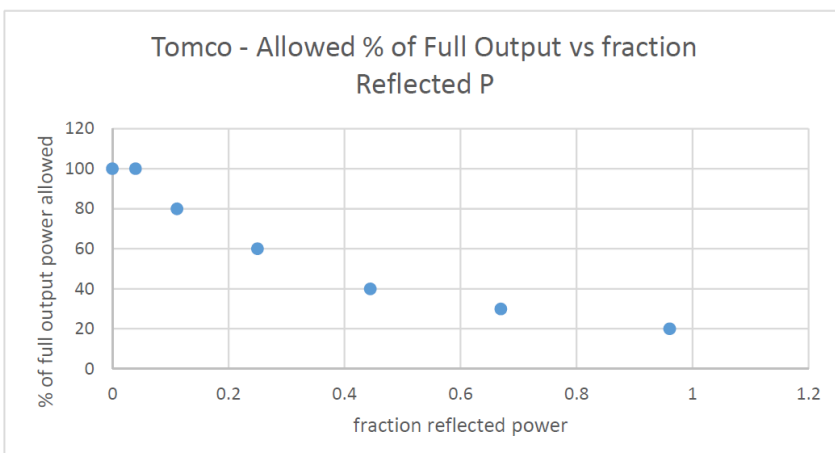

Figure 97: The de-rate table is plotted here.

14 Y567B measurements [44](R. Madrak & J. Reid)

We will use the same power tetrode (Eimac Y567B) which is used in the main (fundamental frequency) Booster cavities (~38 - 53 MHz), the Main Injector, and the Recycler (~53 MHz). According to the specifications for the Y567B (Eimac 4CW150000 [45],), it can operate with up to 150 kW of power dissipated in the anode, and up to 108 MHz. In present Booster cavities, the output maximum is 100 kW, with an efficiency of ~60 – 70%. The 2nd harmonic cavity is expected to have shunt impedances of 96 kΩ and 180 kΩ at 76 and 106 MHz, respectively. For the required peak voltage of 100 kV across gap, substantially less power will be needed by the Booster 2nd harmonic cavities when compared to the existing cavities operating at the fundamental frequency. Nevertheless, we must verify that the tetrode can produce the required output power at the frequencies of the 2nd harmonic.

14.1 The power amplifier and test station

Testing and use of the tetrode at a given frequency requires a module ("power module") to mechanically support the tube and supply voltage to its various electrodes, a drive resonator ("cathode resonator"), and an output resonator ("anode resonator"). The tetrode, power module, and cathode resonator together are referred to as the PA (power amplifier).

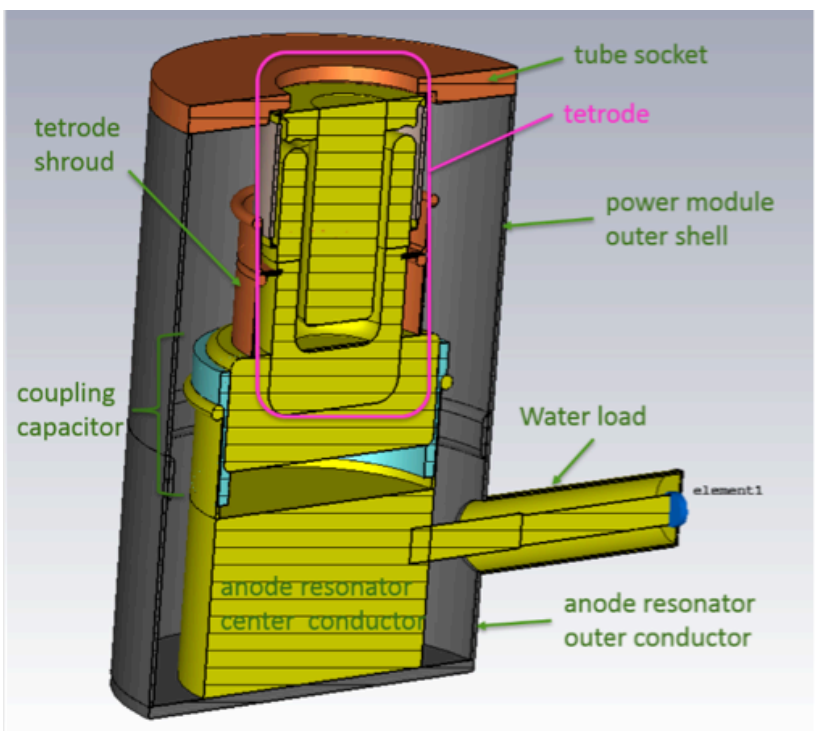

Figure 98: Drawing of the PA test setup.

The power module is essentially a shell with the tube socket. The drive resonator is a coaxial line which looks inductive. This ideally should cancel the imaginary part of the tube input impedance, which is capacitive. "Swamper loads" (two 50 Ω loads in parallel) are connected to it so that the resonance is broad, and the tube can be driven over a wide frequency range by a solid state amplifier which would ideally see a purely resistive 50 Ω load.

The anode resonator serves as a (non-tunable) stand-in for a real cavity during PA testing. A water cooled 50 Ω load is attached to it to mimic the power dissipation in the ferrite of a real cavity with a tuner. The resonator and power module form a shorted transmission line; a different resonator must be constructed for each frequency at which we want to test the tube. Since a spare Booster power module was available, we used this for our testing. In the case of the real 2nd harmonic cavity, the design for the power module is smaller so that the input part of the cavity does not excessively detune it. For the PA testing we also use the same coupling scheme as the main Booster PAs. That is, a shroud is attached to the anode of the tetrode and inserted into a blocking (coupling) capacitor which is mounted on the anode resonator center conductor. This scheme will also be different in the real 2nd harmonic cavity, but it is suitable for testing the tetrode.

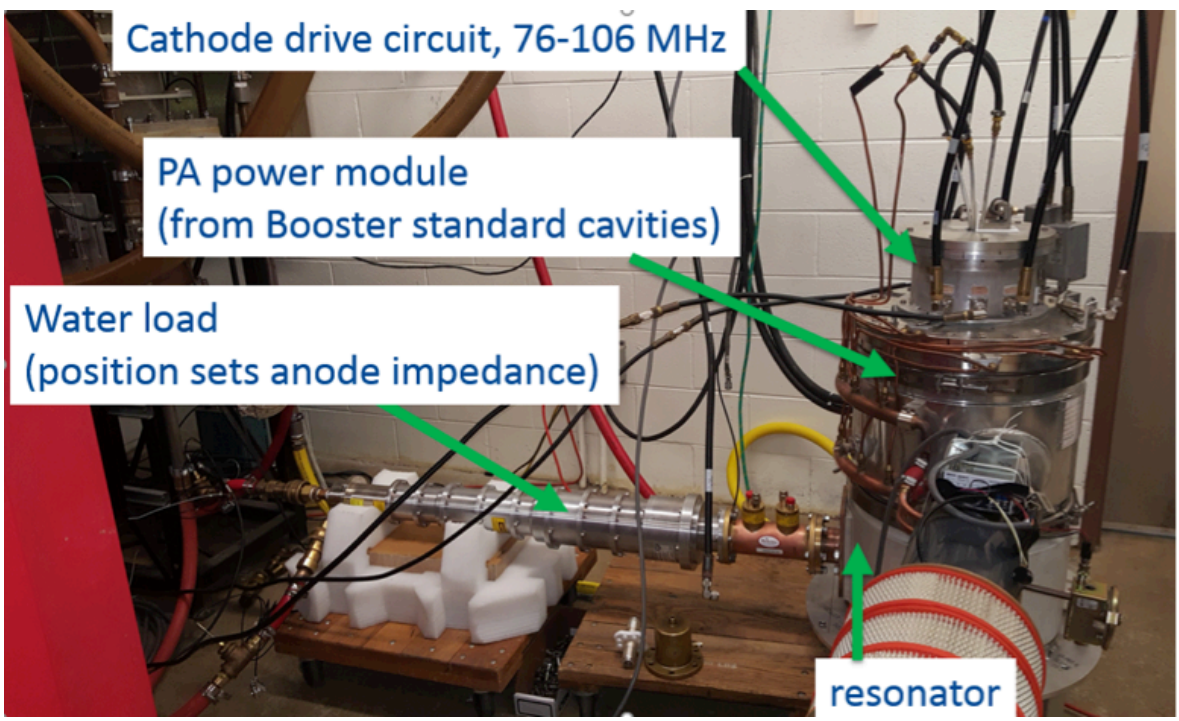

Figure 99: Photograph of the PA power test setup.

Given the components used, the 2nd harmonic test station looks very much like a fundamental Booster PA test station, except that the anode and cathode resonators are different sizes. The cathode resonator was constructed from a prototype fundamental cathode resonator by shortening it. (See section 13 for more details.) A new anode resonator was constructed so that the complete setup would resonate at 76 MHz. A drawing and photograph are shown in Figure 98 and Figure 99.

The first anode resonator was designed to test the PA at 76 MHz. The setup was modelled using a transmission line plus lumped circuit analysis with Agilent (now Keysight) Advanced Design System (ADS), and also with CST Microwave Studio. The simulations are discussed in section 14.2.

After construction of the first resonator, the measured frequency was only 71.7 MHz. Power tests were done at this frequency, and then later the resonator was modified to test at exactly 76 MHz.

The PA was also tested at 106 MHz. Since a quarter wave resonator would have been too small to be practical (for instance, to connect the load), the 106 MHz resonator plus PA form a 3 /4 resonator. A picture is shown in Figure 100(a).

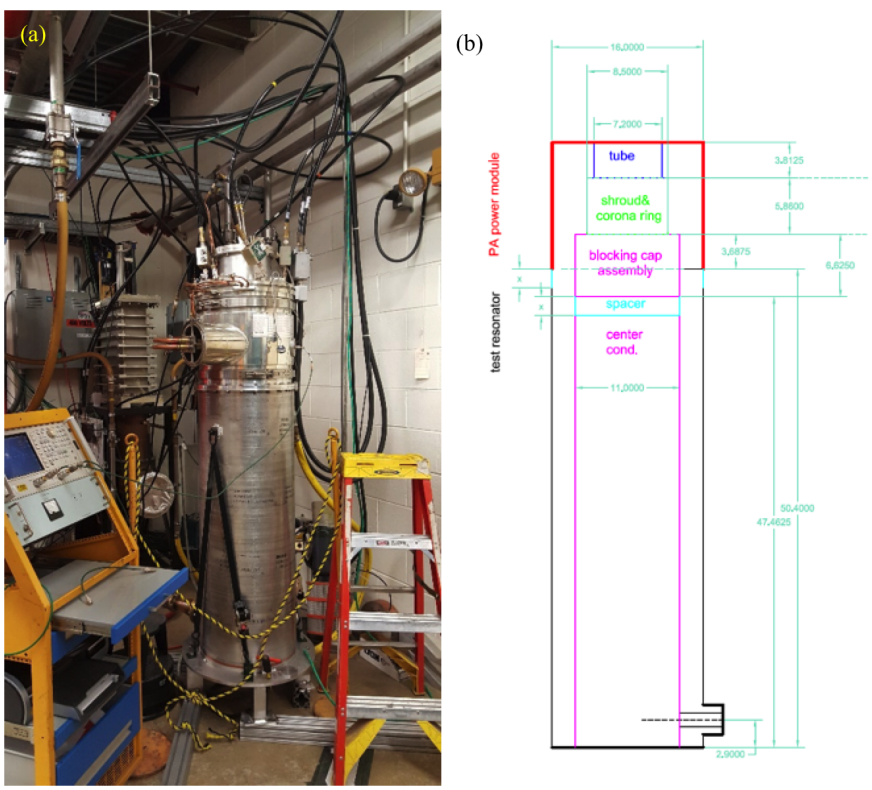

Figure 100: (a) Photograph of the 106 MHz PA test setup. (b) Drawing that shows a removable spacer (2″ long) that was included in the design.

14.2 Simulations and anode resonator design

To determine the geometry of the anode resonator such that the system would resonate at 76 MHz, a transmission line model of the existing setup for the fundamental Booster PA tests was constructed. The transmission line dimensions are determined by the diameters and lengths of the anode resonator inner and outer conductors, tube anode diameter, and power module outer shell diameter. The resonator is shorted at one end and the other end is foreshortened by the tube output capacitance of ~60 pF. The blocking capacitor is represented by another lumped capacitance of 1000 pF. The model in the Keysight/Agilent Advanced Design System (ADS) software is shown in Figure 101. The simulation predicted a resonant frequency of 53 MHz and a Q of 60, which agreed with what was measured. The dimensions of the transmission line corresponding to the anode resonator part of the setup were then modified so that the frequency of the setup was 76 MHz. Changes are shown in Figure 102.

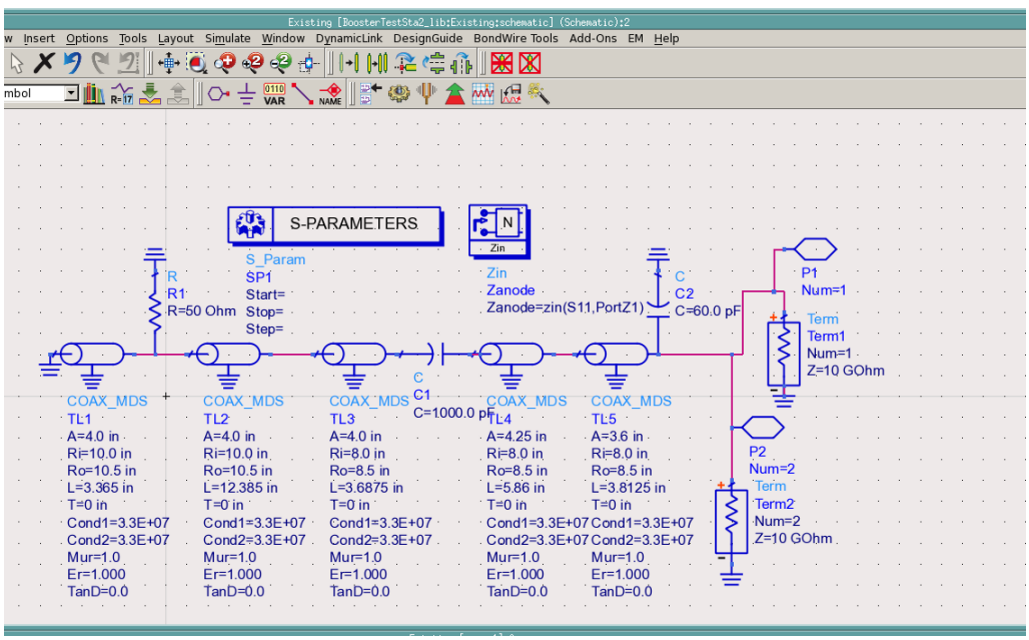

Figure 101: The transmission line model of the Booster fundamental PA test setup in Keysight/Agilent ADS.

As a check, the anode resonator and tube were also simulated in CST Microwave Studio. In the first (simplified) model the output capacitance of the tube was represented by a physical parallel plate capacitor at the end opposite the short. Again, the fundamental PA test station was modeled first and tuned (by adjusting the capacitor gap) until it predicted the correct resonant frequency. The model was then modified using the anode resonator dimensions which ADS had shown to give a resonant

frequency of 76 MHz. The CST model predicted 78 MHz. It was decided that this was sufficient agreement, especially since the simulations were both using simplified models of the tetrode. (The coupling capacitor was simplified as well).

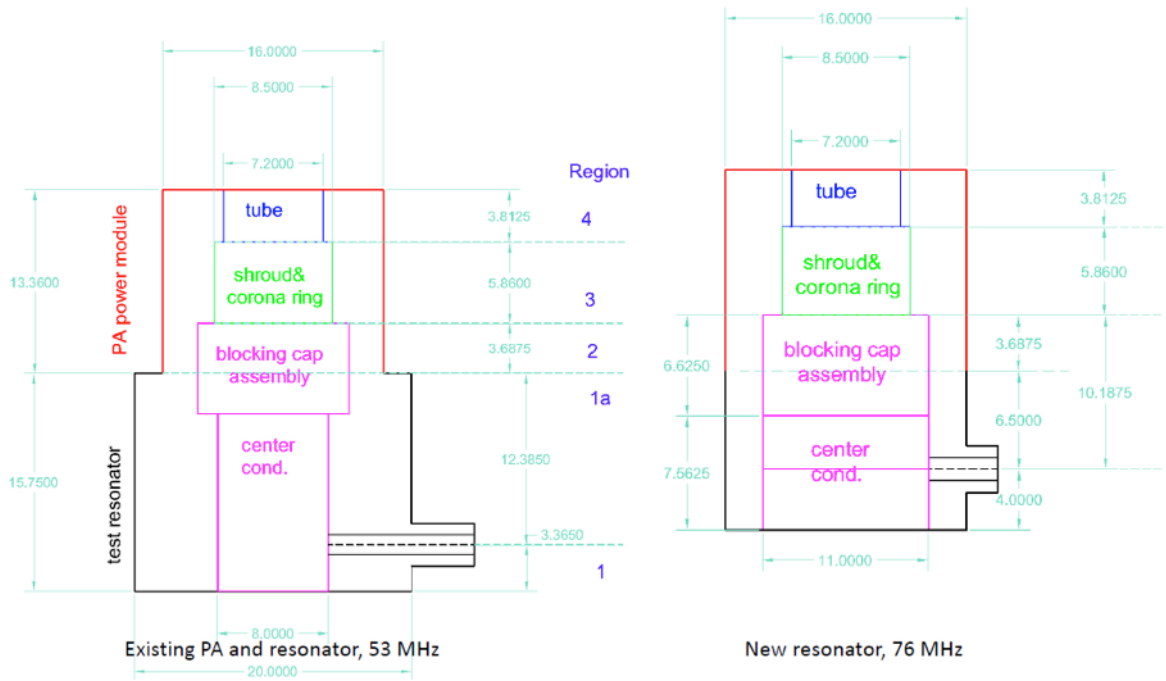

Figure 102: Modifications to the PA test setup.

The anode resonator was constructed according to the calculated dimensions, however, the resulting resonant frequency of the system was 71.7 MHz and not the desired 76 MHz. We proceeded with power tests since it was likely that it was sufficient to test the PA near 76 MHz. In order to test the PA at exactly 76 MHz, a modification to the setup was designed. A ring was manufactured and bolted to the bottom of the anode resonator, making it effectively shorter and higher frequency. A modification to the load connection scheme was also made. In order that the impedance seen by the tube was optimal and similar to that in the 71.7 MHz tests, the connection scheme for the load was changed from a direct straight across connection to one in which the conductor attached to the load loops up and back down again, as shown in Figure 103. (In order to maintain the same impedance with the added ring and a straight across connection, the connection point would have had to be moved up further than the end of the anode resonator center conductor, into the coupling capacitor region.)

For the design of the 106 MHz test station, we again used a model similar to that shown in Figure 101. The main differences were the following. First, the 106 MHz resonator and PA formed a three quarters wavelength resonator, instead of a quarter wavelength resonator. Second, the value of the tube output capacitance was changed from 60 pF to 73.1 pF, which is the capacitance, which, when used in

the model for the initial 71.7 MHz resonator, gave the correct measured frequency. Nevertheless, we had seen before that extrapolating from 53 MHz to 76 MHz gave a cavity with a low frequency. In anticipation that this might happen again, we designed the 106 MHz cavity to have 2 inch long removable spacers on the inner and outer conductors. The cavity nominal predicted frequency was 106 MHz with the spacers in. If the frequency was too low, the spacers could be removed or shortened. As it turned out, the test cavity was exactly on resonance at 106 MHz with the spacers removed. The change in the design to 106 MHz is shown in Figure 100(b) to be compared with Figure 102.

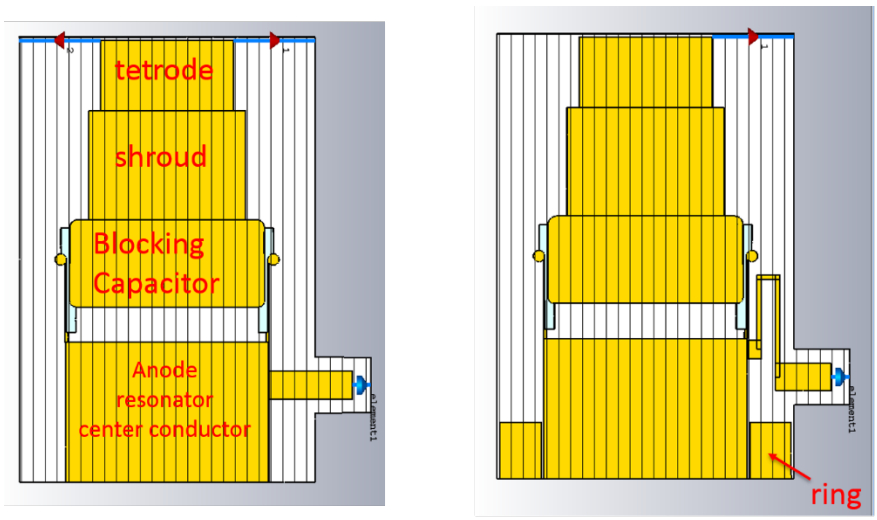

Figure 103: Original (left) and modified (right) anode resonator. The modified setup contains a ring at the bottom to increase the resonant frequency to from 71.7 to 76 MHz. In addition, the load connection geometry is changed so the tetrode sees the optimal impedance.

14.3 Cathode resonator

Editor's note: A more detailed discussion of the cathode resonator can be found in section 13.

A schematic of the drive circuit is shown in Figure 104. The amplifier, made by Tomco [43], has a maximum output power of 8 kW. It is meant to drive a 50 Ω load. To protect the amplifier components, forward output power is limited depending on the fraction of reflected power as shown in Figure 97 in section 13.4. However, the amplifier does not limit output unless the amount of reflected power is above the threshold for 2 seconds, for which it can withstand 100% reflected power at full output. Since we operate in pulsed mode with pulse widths substantially less than 2 seconds, this situation will never be realized.

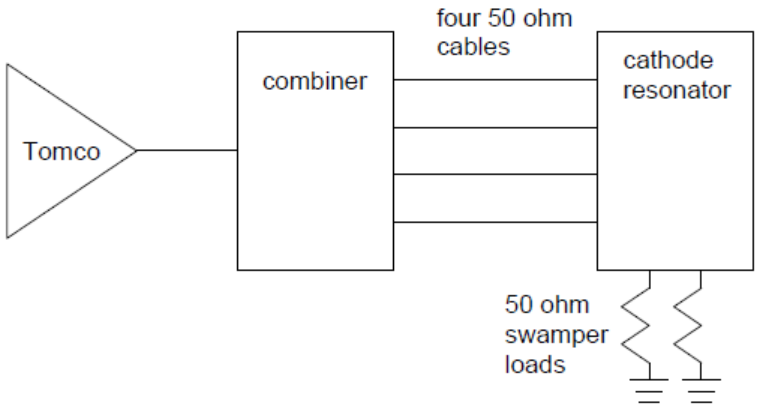

Figure 104: The schematic of the drive configuration.

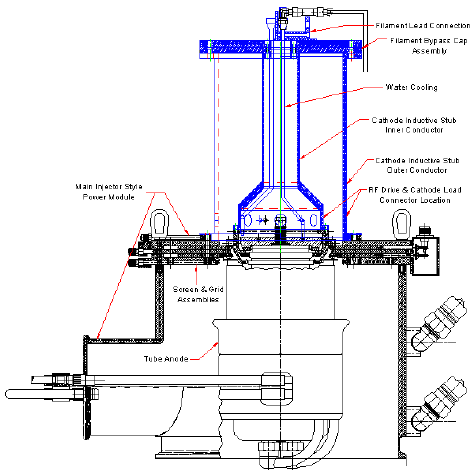

Figure 105: Cross section of the fundamental Booster PA. The cathode resonator is drawn in blue.

Four 50 Ω Heliax cables connect the combiner outputs to the cathode resonator, through HN connectors and banana plugs (inside the resonator).

The cathode resonator was modeled in a manner similar to that of the anode resonator, and is also discussed in Ref [42]. That is, it is essentially a shorted quarter wave resonator foreshortened by the tube input capacitance of 250 pF. Note, according to [42] this includes both the tube inter-electrode capacitance and the capacitance of the tube socket. The frequency of the new resonator, the "76 MHz

cathode resonator", was shifted up by shortening the Booster prototype fundamental resonator (see Figure 105 and Figure 89) so that its peak was near 76 MHz. As with the fundamental resonators, this frequency was chosen as the peak (as opposed to mid-range) since it is where the shunt impedance of the cavity is the lowest and thus where the most drive power would be needed.

The simulation predicted that the response would be down by only 1.1 dB at 106 MHz, compared to 76 MHz. Unfortunately, this turned out to not be true. In fact, with this cathode resonator, we have measured in low power tests that the fraction of reflected power is 77% at 106 MHz; at 76 MHz only 5 – 10% is reflected. The failure of the simulation to accurately predict the falloff in response and is larger than expected reflection is possibly due to a frequency dependence of tube input capacitance.

One way to improve the situation, which has been studied at low power levels and has shown promise (see section 13.3), is to attach an open stub (made from heliax cable) to the resonator to adjust the impedance. Here, we are shaping the response curve as a function of frequency to something which is more desirable. It turned out to be sufficient to slightly modify the design of cathode resonator — this time, aiming for maximum response between 76 and 106 MHz as opposed to at 76 MHz. So the response at 76 MHz is inferior to that of the initial resonator, but is nevertheless workable at both frequencies. This "modified cathode resonator" was shorter than the 76 MHz cathode resonator by 0.18". Also, the center conductor was not tapered; the OD was constant (5.75"), and the same OD as the base (larger OD part) of the 76 MHz cathode resonator. Before building the modified cathode resonator, we constructed one out of sheet metal and measured the reflected power at low power levels. We then iterated upon this to obtain the best possible responses at both 76 and 106 MHz.

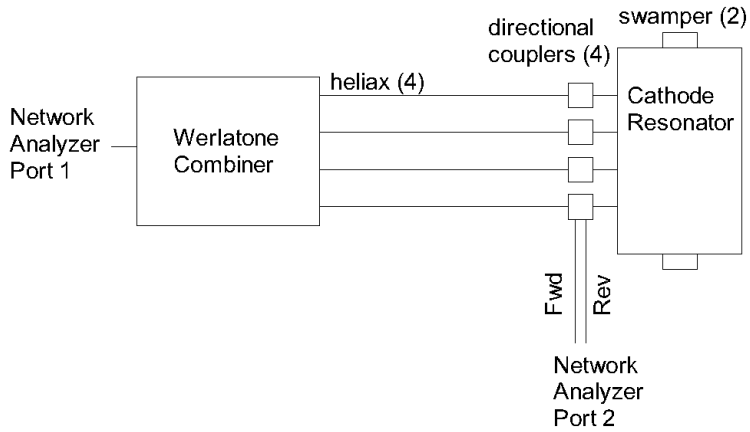

Figure 106: Low power measurement setup for 76 MHz for measuring the cathode resonator reflected power.

Figure 106 shows the setup used to measure the low power response of the cathode resonators with no high voltage on the tetrode. The filaments were on. Figure 107 shows the directional coupler measurements of the percentage of reflected power for the (1st) 76 MHz cathode resonator. As we will see in the next section, this is lower by up to around 5% when the tetrode is actually on, at 76 MHz. Figure 108 shows the response of the modified cathode resonator with the same low power setup. At 76 MHz ~32% of the power is reflected; at 106 MHz, ~59% of the power is reflected.

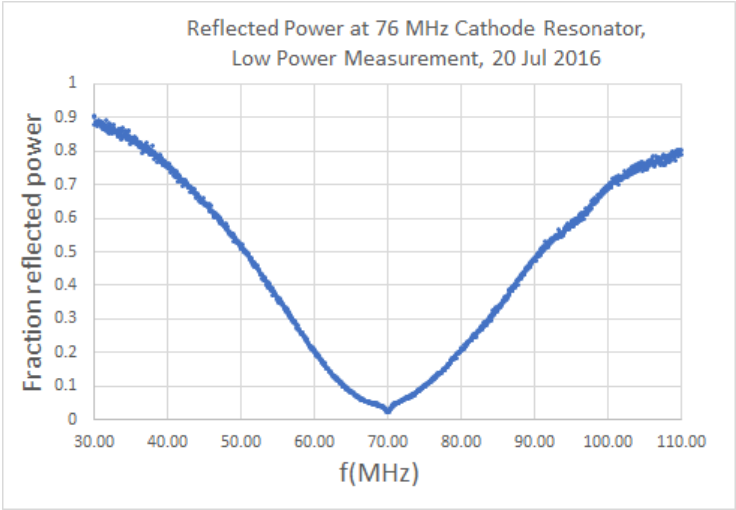

Figure 107: Measurement of the 76 MHz cathode resonator reflected power before modifying the resonator.

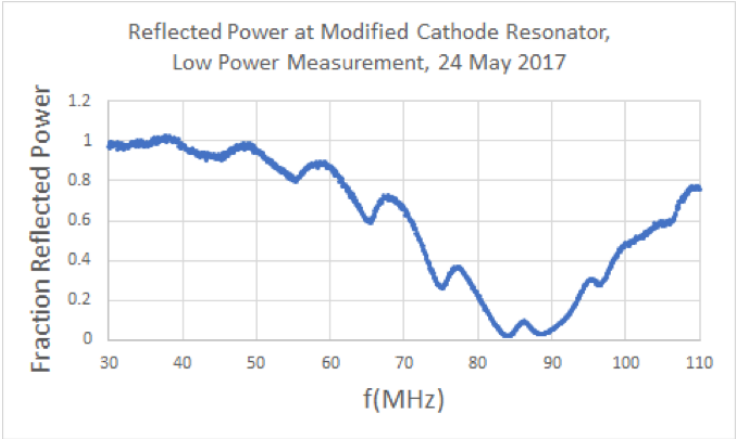

Figure 108: Measurement of the 76 MHz cathode resonator reflected power.

The modified cathode resonator was the one used in the power test at 106 MHz. For high power tests at 76 MHz, the PA was initially tested using the 76 MHz cathode resonator, and was then tested a second time with the modified cathode resonator. Again, in the high power tests, the measured reflected power was less than or equal to that measured in the low level tests. (See section 14.4 below.)

14.4 High power tests

The PA was first tested at 71.7 MHz in April 2016 and then at 76 MHz, with a modification to the anode resonator, in January 2017. The impedance seen by the tetrode is set by the vertical position of the 50 Ω water load, which is adjustable. We aimed for $Z_0 = \frac{V_a(DC)}{I_a(DC)} \approx 2\ \mathrm{k\Omega}$ where $V_a(DC)$ and $I_a(DC)$ are the DC anode voltage and current. Following Carter [34], by Fourier analysis for class B [5] operation, this corresponds to an impedance at the RF frequency of $Z_1 = {}^{2}/_{\pi}\, Z_0$.

The test was performed with 25 – 50% duty factor and 40 ms wide RF pulses. Power dissipated in both the anode and load were determined calorimetrically by measuring the flow to each and the temperature differential in the cooling water. As a cross check, power dissipated in the load was also measured using a directional coupler inline with it. Other measured quantities were DC anode voltage and current, forward and reflected drive power, and anode and cathode monitor response. Forward and reflected drive power were measured by one directional coupler on the output of the drive amplifier, and also by one of four directional couplers on the four inputs to the cathode resonator. A schematic of the test setup is shown in Figure 109.

For the main study, several data points were taken starting at an anode voltage of 12 kV and increasing it to 21 kV. At each point, the drive power was adjusted so that the screen current was 300 mA. In this case the tetrode was operating with an efficiency of $\geq 70\%$. For another study (only at 76 MHz), the anode voltage was kept constant at 21 kV and the drive power was varied, regardless of the screen current or efficiency. This was done in the interest of measuring output power in the case where the drive power is small due to poor impedance matching to the cathode resonator.

[5] Technically, the amplifier is operated as class AB, but since the conduction angle is not very much more than 180°, this estimate can be used.

For the main study, several data points were taken starting at an anode voltage of 12 kV and increasing it to 21 kV. At each point, the drive power was adjusted so that the screen current was 300 mA. In this case the tetrode was operating with an efficiency of 70%. For another study (only at 76 MHz), the anode voltage was kept constant at 21 kV and the drive power was varied, regardless of the screen current or efficiency. This was done in the interest of measuring output power in the case where the drive power is small due to poor impedance matching to the cathode resonator.

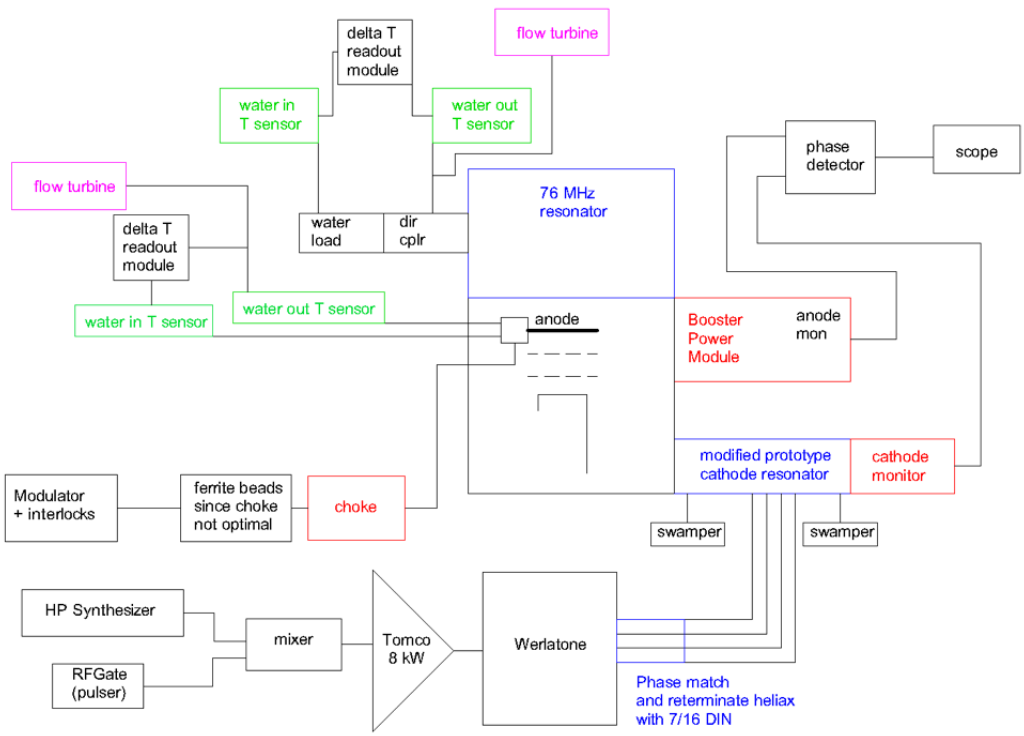

Figure 109: Schematic of the PA test setup.

For the main study, several data points were taken starting at an anode voltage of 12 kV and increasing it to 21 kV. At each point, the drive power was adjusted so that the screen current was 300 mA. In this case the tetrode was operating with an efficiency of 70%. For another study (only at 76 MHz), the anode voltage was kept constant at 21 kV and the drive power was varied, regardless of the screen current or efficiency. This was done in the interest of measuring output power in the case where the drive power is small due to poor impedance matching to the cathode resonator.

In the 76 MHz power test with the 76 MHz cathode resonator, A maximum output power of 138 kW was obtained with an anode voltage of 21 kV and forward drive power of 3 kW. The tube efficiency was 70%. Similar results were obtained in the 71.7 MHz test.

The tetrode was next tested at 106 MHz, with the modified cathode resonator (see section 14.3). Plots are shown in Figure 110 to Figure 113. In these plots, "`dir cplr`" refers to the directional coupler on the output of the drive amplifier. "`DC 1/4 x 4`" refers to the power at one of four directional couplers on the input to the cathode resonator. The power in one of these has been multiplied by four.

The final test conducted was again at 76 MHz, but this time with the modified cathode resonator. Plots are shown in Figure 114 to Figure 117.

Given the predicted shunt impedances of 96 kΩ and 180 kΩ at 76 MHz and 106 MHz, respectively, we expect we will need 52 kW and 28 kW to produce a peak voltage of 100 kV in the cavity. Technically, for, extraction, only 30 kV is needed, in which case the PA output is only 2.5 kW. For transition, it is likely that more than one cavity will be needed. As shown in the plots referenced above, the tetrode can produce more than the required amount of power at both frequencies, using the modified cathode resonator. In addition, the drive powers (and associated fraction of power reflected) required to produce these output power levels are within the safe operating range for the drive amplifier, as shown in Figure 97.

Additional plots and more detail can be found in Ref. [44].

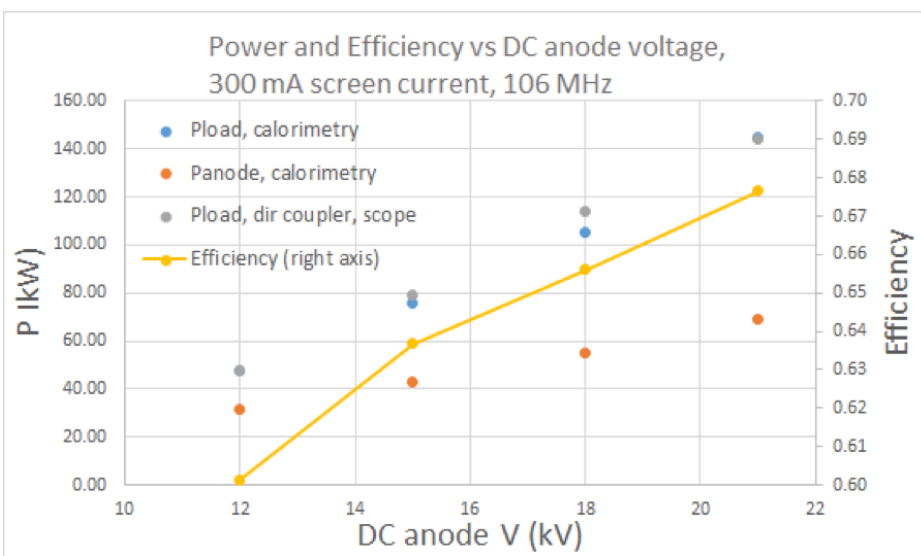

Figure 110: Output (load) power, power dissipated in anode, and efficiency for each value of DC anode voltage from the 106 MHz test. At each point the drive power was set to produce 300 mA of screen current.

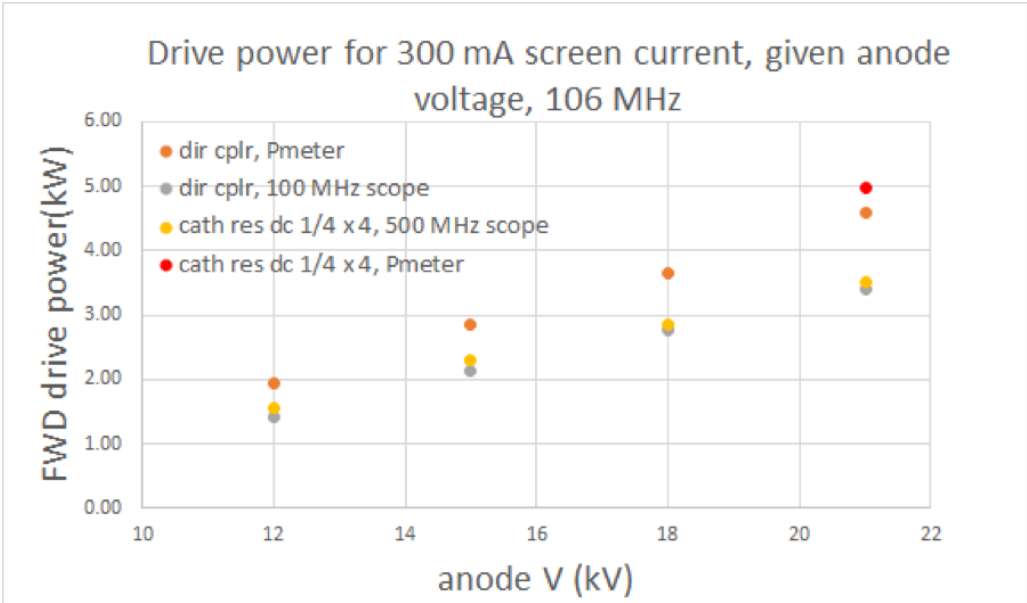

Figure 111: Drive power used at each anode voltage setting to produce 300 mA of screen current from the 106 MHz test. The measurements using the dedicated power meter (Pmeter) are more accurate. Additional measurements of the voltage were taken on the oscilloscopes, and power was calculated. This serves mainly as a cross check.

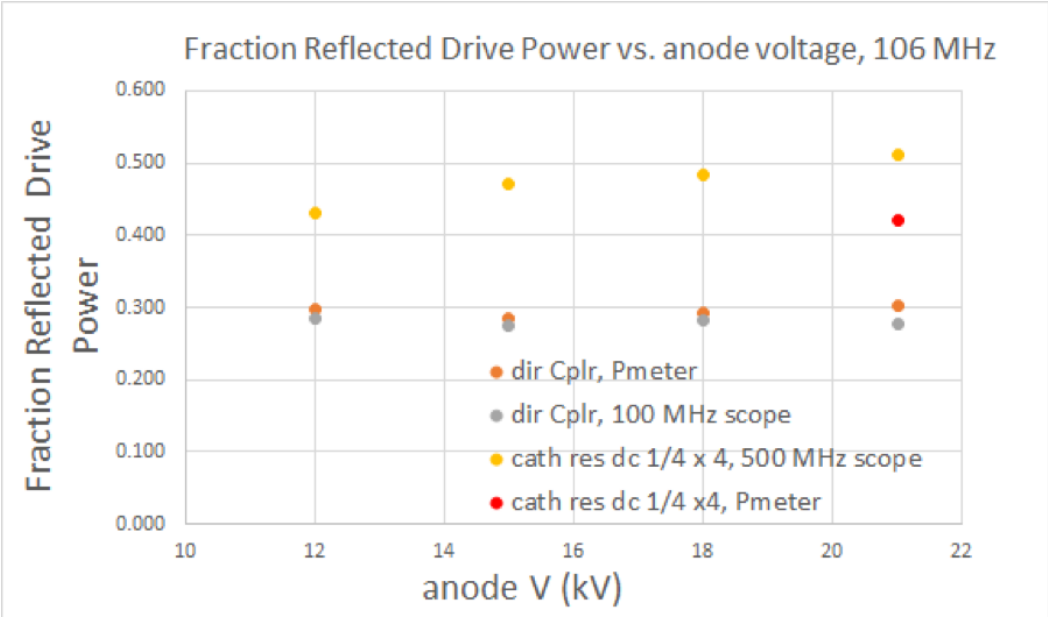

Figure 112: Fraction of reflected power, measured in several ways, for each DC anode voltage from the 106 MHz test.

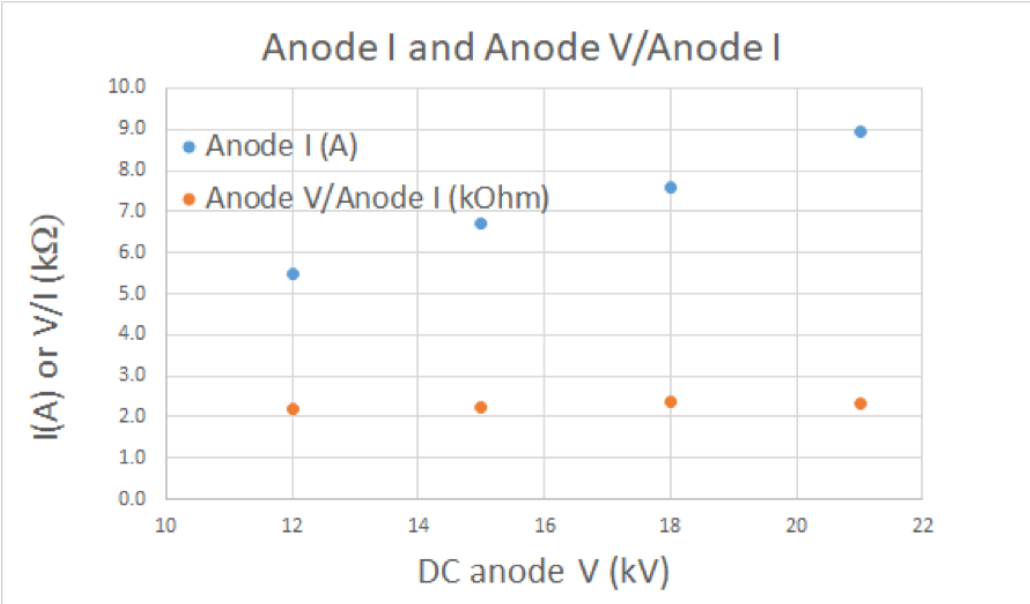

Figure 113: DC anode voltage and current for 300 mA screen current from the 106 MHz test.

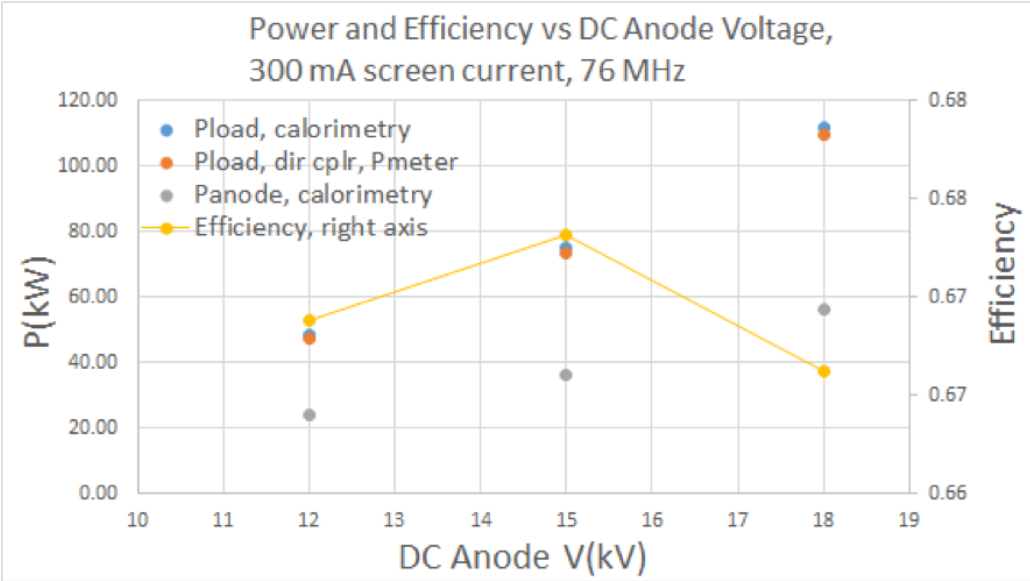

Figure 114: Output (load) power, power dissipated in anode, and efficiency for each value of DC anode voltage from the final 76 MHz test. At each point the drive power was set to produce 300 mA of screen current.

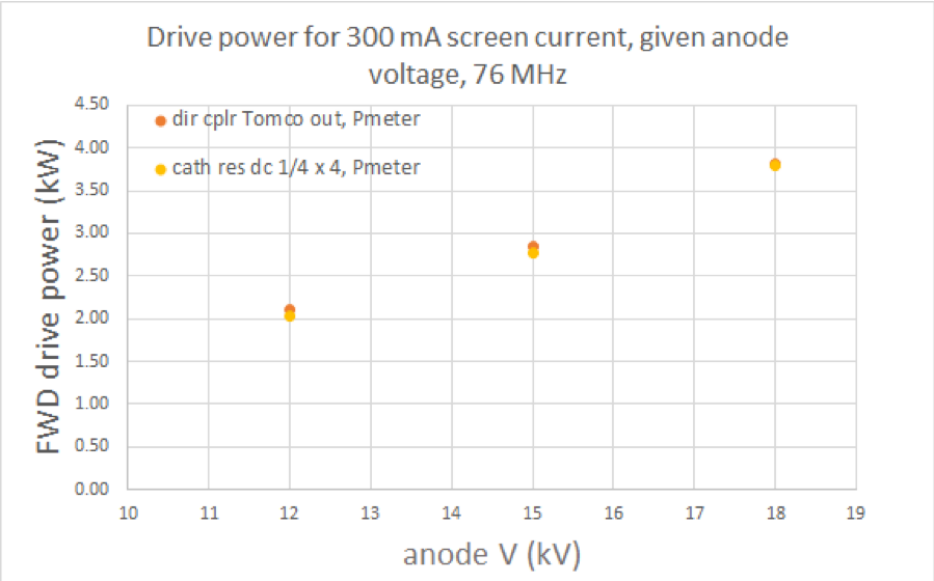

Figure 115: Drive power used at each anode voltage setting to produce 300 mA of screen current from the final 76 MHz test. The measurements using the dedicated power meter (Pmeter) are more accurate. Additional measurements of the voltage were taken on the oscilloscopes, and power was calculated. This serves mainly as a cross check.

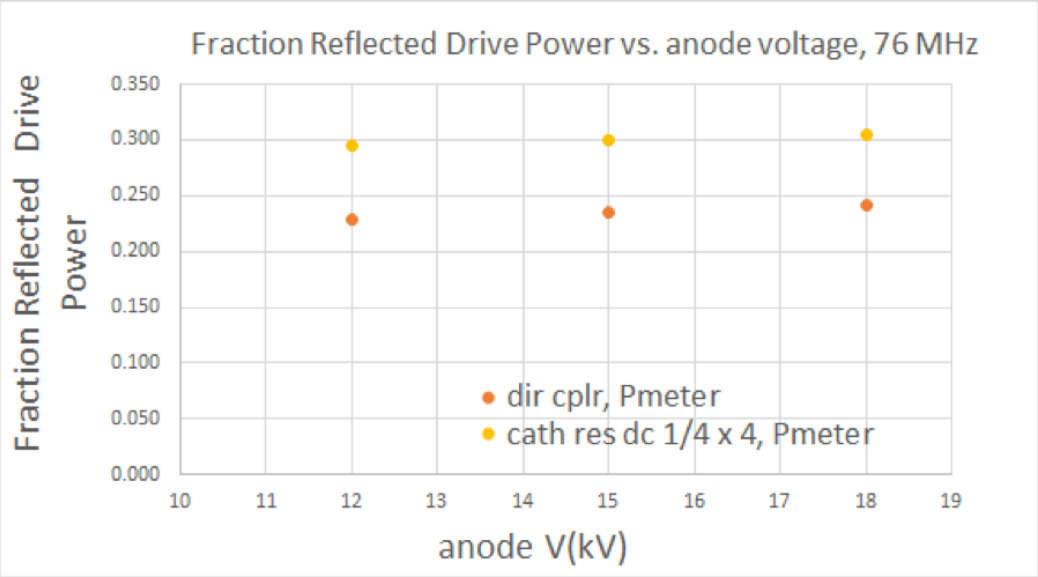

Figure 116: Fraction of reflected power, measured in several ways, for each DC anode voltage from the final 76 MHz test.

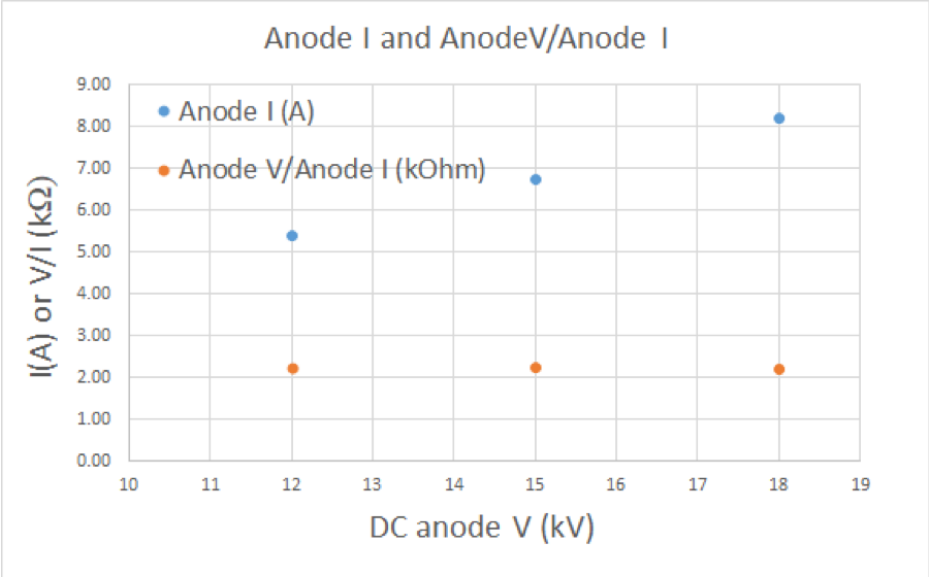

Figure 117: DC anode voltage and current for 300 mA screen current from the final 76 MHz test.

15 Mock cavity measurements (K. Duel, R. Madrak, G. Romanov, I. Terechkine)

In the interest of validating the simulations, a model cavity was constructed. The goal was to measure the frequencies of the fundamental and higher order modes, as well as the corresponding shunt impedances and Qs, as a function of magnetic field bias. For the simulation validation, the measurements were compared with the simulation's prediction. Input to the simulation characterizing the AL800 had already been made based on previous material measurements. See section 3.

A drawing of the model cavity assembly is shown in Figure 118. The outer conductors are made of sheet (0.010" or 0.013" thickness) copper. The center conductor is machined from solid copper. The model cavity dimensions were based on those of the real cavity at the time the model cavity was designed (the real cavity design has continuously evolved). In the larger OD section (without garnet), the center and outer conductor size, as well as the gap distance, are the same as in the real cavity.

The radial dimensions in the garnet section are much smaller than those in the real cavity. This is due to the fact that in order to perform measurements, an external field must be applied. The solenoid, which was available, has an inner bore of only 4". Thus, the radial dimensions of the inner and outer conductors in the garnet section were scaled down so that they would fit inside of the solenoid. The ratio of the outer to inner diameter was kept the same as in the real cavity so the model and real cavities still have the same characteristic impedance in that section.

Measurements of frequency and Q were performed using probes located near the gap, weakly coupled to the cavity electric field. A stretched wire measurement [46, 9] was also performed. In this case, a 0.028" diameter wire was stretched across the cavity gap, through the inside of the center conductor (the "beampipe"), and through electrically insulating bushings to the exterior of the cavity, as shown in Figure 24. More traditionally the wire would exit the cavity through the "beampipe" on the shorted end, but this was not practical in the present case because it was necessary to have the garnet as close as possible to the bottom of the solenoid. This is to reduce magnetic field non-uniformities inside the garnet, which lead to ambiguities when comparing measurement and simulation. Matching resistors were added to each end of the wire. This is to match a network analyzer's 50 Ω output to the characteristic impedance of the transmission line formed by the wire inside of the beampipe. While performing a S_{21} (transmitted power) measurement from one end of the wire to the other, the shunt impedance across the gap can be viewed as a resistive element in a voltage divider with the matching resistors and the network analyzer's 50 Ω termination. Measuring the value of S_{21} at the peak of the resonance and knowing the values of the resistors in the matching network allows for the calculation of the shunt impedance. For some modes, the presence of the stretched wire reduces the cavity Q and shunt impedance (though R/Q should be preserved [47]). Thus, the extracted

value of the shunt impedance, Rshunt, is scaled by Q_{probe}/Q_{sw}, where Q_{probe} and Q_{sw} are the measured values of Q from the probe measurement and the stretched wire measurement.

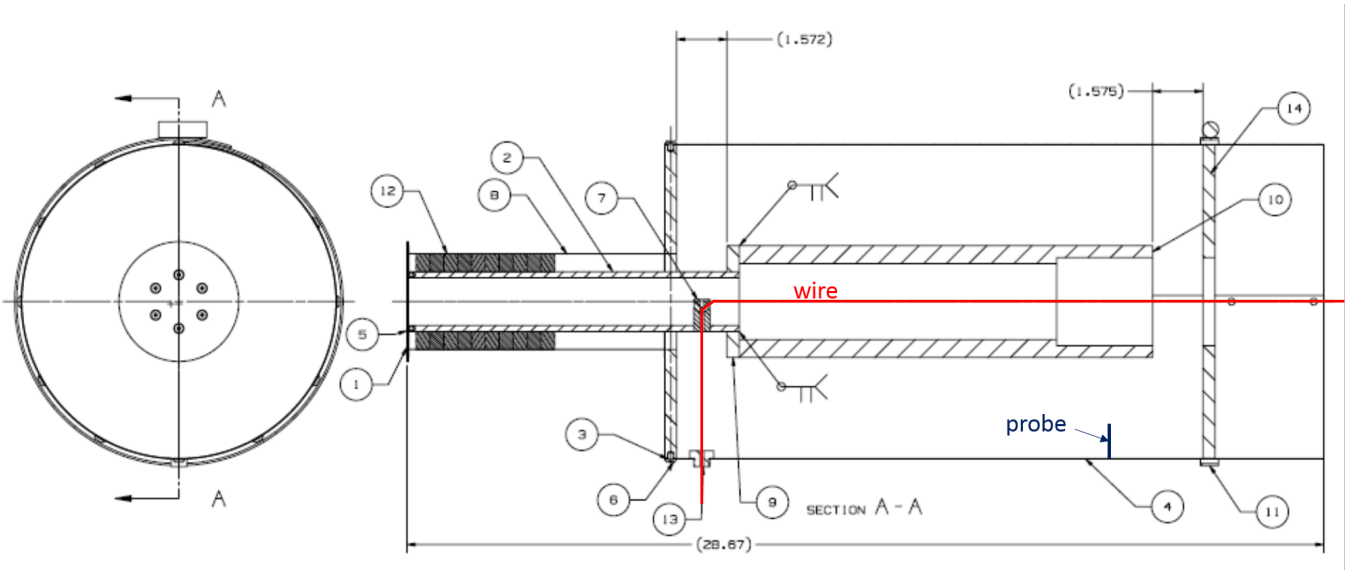

Figure 118: Drawing of the Model Cavity: 1) Cavity shorted end and shorting plate, 2) Garnet center conductor, 3) Transition plate, solid copper, 4) Outer conductor, 5) Screws connecting center conductor to shorting plate, 7) G10 bushing for stretched wire, 8) Garnet outer conductor, 10) Cavity gap end, 12) Garnet, 13) G10 bushing for stretched wire.

After the probe measurements and stretched wire measurements were performed with garnet, it was removed from the cavity, and the frequency and Q of the fundamental mode was measured. (Due to the nature of the construction of the cavity, it was not advisable to do this measurement first.) This allows us to separate any losses in the garnet from losses in the copper and any imperfect joints. While the predicted value of Q was ~3600 at ~135 MHz, the measured value was only ~1900. Not all of the joints were soldered, and after some manipulations it was seen that the Q could be temporarily increased to ~2500 by applying additional pressure or adding shielding to some joints. This indicates that there were losses due to imperfect joints between various parts of the cavity. For a more detailed discussion see [Yuri].

Figure 119 shows frequency as a function of bias for simulation and data. The data are from the measurements with the probes. (The stretched wire measurement is needed for Rshunt only). The agreement is good.

Figure 120 shows the Quality factor, for data and simulation, where again the data is from probe measurements. Though it is not rigorously correct, the simulation uses an effective copper resistivity that is larger than nominal to mimic the effect of the losses due to poor RF joints. The resistivity used was that which resulted in the maximum observed Q in the bare cavity (~2500).

The main purpose of the cavity was to validate the modeling of the garnet which has been achieved.

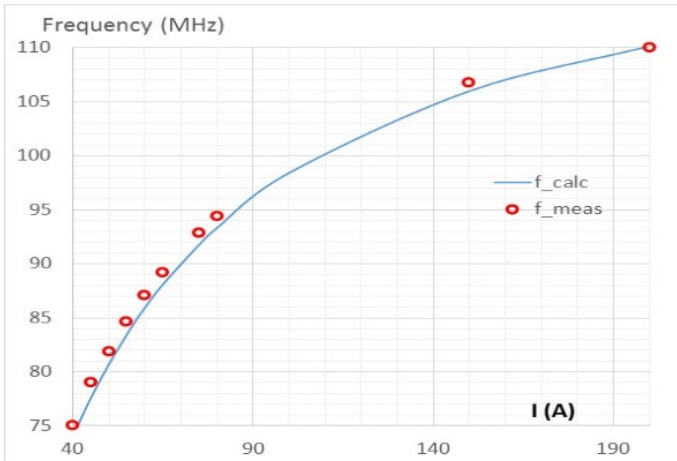

Figure 119: Frequency as a function of solenoid bias from measurements (probe data) and simulation (labeled as "f_calc" in the plot).

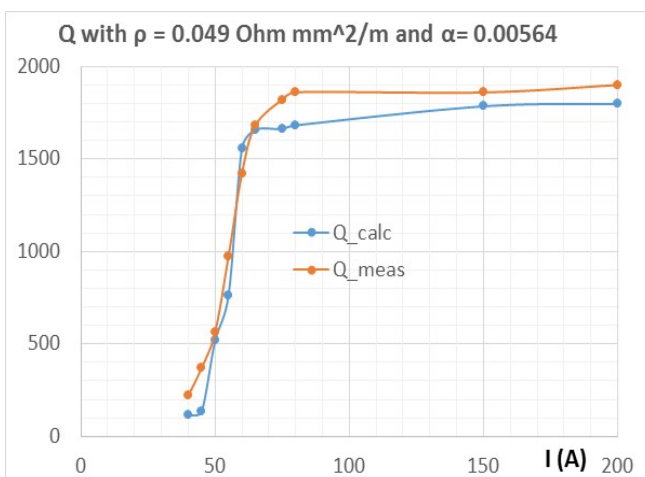

Figure 120: The quality factor as a function of solenoid bias for data and simulation. The simulation uses an effective conductivity for the copper (lower than nominal) to mimic losses due to poor RF joints.

16 Garnet characterization (J. Kuharik, R. Madrak, G. Romanov, I. Terechkine, C.Y. Tan)

Hello world

16.1 Garnet witness pieces measurements (J. Kuharik, I. Terechkine)

Hello world

16.2 Garnet ring measurements(J. Kuharik, R. Madrak, G. Romanov, I. Terechkine, C.Y. Tan)

Hello world

16.2.1 Dimensions

Hello world

17 Mechanical design (K. Duel & M. Slabaugh)

This cavity is nearly impossible to build ☺.

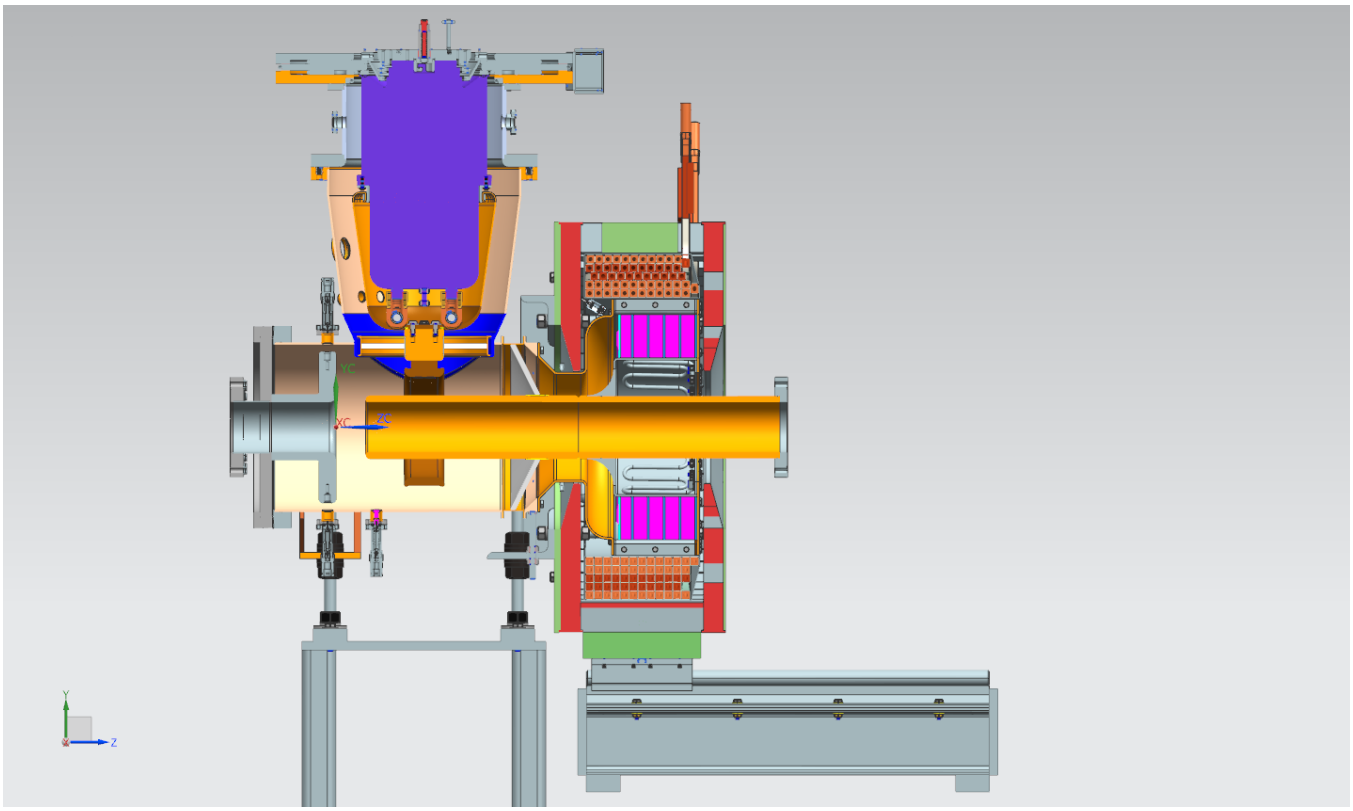

Figure 121: The 3D model of the cavity sitting on its stands.

17.1 Garnet sectors and alumina

The garnet sectors are made from rectangular pieces of garnet …

17.2 Procedure for gluing garnet sectors and to alumina

This was the procedure given to the vendor (National Magnetics) on 12 Sep 2016 for gluing the garnet sectors together and also to the alumina.

Materials

1. STYCAST 2850 FT [21]
2. Catalyst 9

Equipment

1. Vacuum Chamber
2. Vacuum pump capable of achieving less than 10 Torr (29 inHg) of vacuum
3. Vacuum gauge
4. Clamps or weights to apply even pressure
5. Scale

Procedure steps

1. Measure the correct ratio of epoxy to catalyst by weight per the technical data sheet specification. Put contents into a container and mix thoroughly.
2. Put container of mixture in vacuum chamber and pump down until vacuum level is greater than 28 inch-Hg and is maintained for 3 minutes.
3. Let up vacuum chamber and inspect surface of epoxy. If slight ripples or evidence of bubbles surfacing are visible, then put under vacuum again to the same vacuum level and time. If surface appears smooth, then proceed to next step. We repeated step 2 once. Alternatively if a clear vacuum chamber is available, then the mixture can be put under vacuum and observed until the bubbling has ceased.
4. Apply thin layer of epoxy to cover entire mating surface of both pieces.
5. Bring pieces together and apply pressure so that interface is only around 5 mils or less thick. We used a 6 kg weight during our test on 3″ square pieces of glass, so ~1.5 psi.
6. Allow epoxy to cure according to the technical data sheet specification.
7. Add the next pie piece and perform procedure again unless there exists the capability to glue all pieces at once with sufficient pressure to reduce interfaces to less than 5 mils thickness.

Note: Use the same procedure for gluing the alumina to the garnet.

17.3 Tuner assembly

The tuner shell made from stainless steel and spun into the required shape shown in Figure 122. However, the result did not meet the drawing specifications of $(0.12 \pm 0.2)''$. A quick back of the envelope calculation showed that the Eddy power losses on the 0.14″ thickness area would increase by 33%. However, from the MWS simulations shown in Figure 67, this is the coolest part of the tuner and so should not pose any heating problems. The frequency shift from the change in volume of the transmission line should be minimal as well.

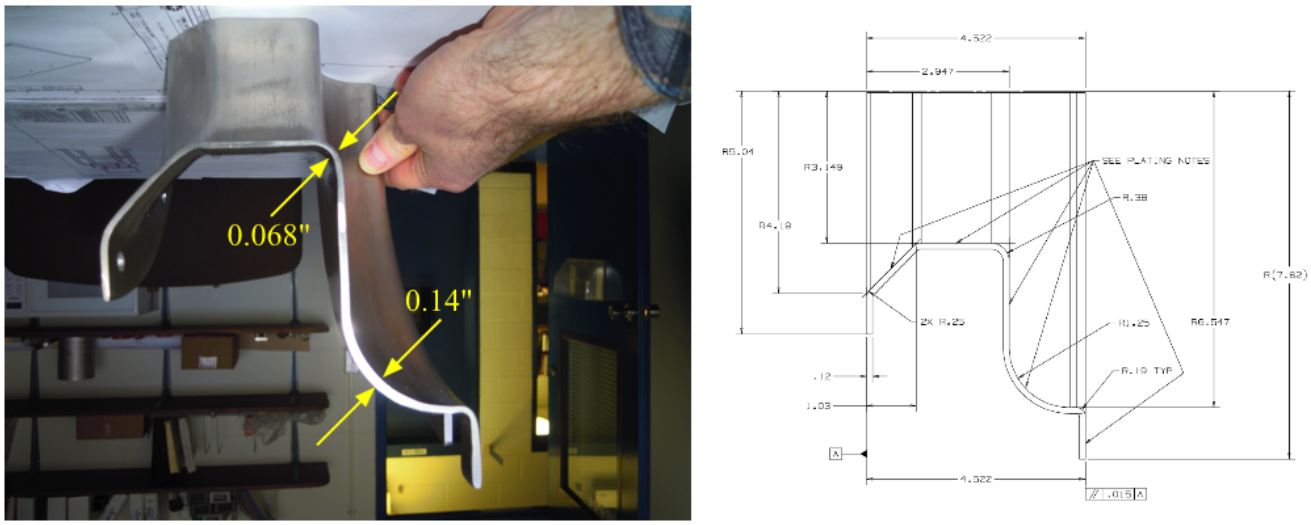

Figure 122: The manufactured tuner shell has thickness that do not meet specifications. The specified thickness is (0.12 ± 0.02) inches.

17.4 Power module assembly

Hello world

17.5 Accelerating cavity assembly

Hello world.

18 High power tests (J. Reid & R. Madrak)

Hello world.

18.1 IR sensor interlock (C.Y. Tan & R. Madrak)

As part of the safety system during the high power tests, we have installed an IR sensor between the solenoid and the tuner. See Figure 123. The IR sensor will monitor the temperature at the front of the tuner stack. The reasons for monitoring the temperature at this location are twofold:

1. Our computer simulations have shown that the highest temperatures are found on this surface. See Figure 54, Figure 55 and Figure 67.
2. There is still some uncertainty in the behavior of the loss coefficient α at low field despite our best efforts in measuring it. Figure 15 shows the reason for our caution: the rapid rise of α at low field makes it very difficult to measure accurately.

Thus, the IR sensor will allow us to trip off the PA during high power testing and prevent damage to the garnet.

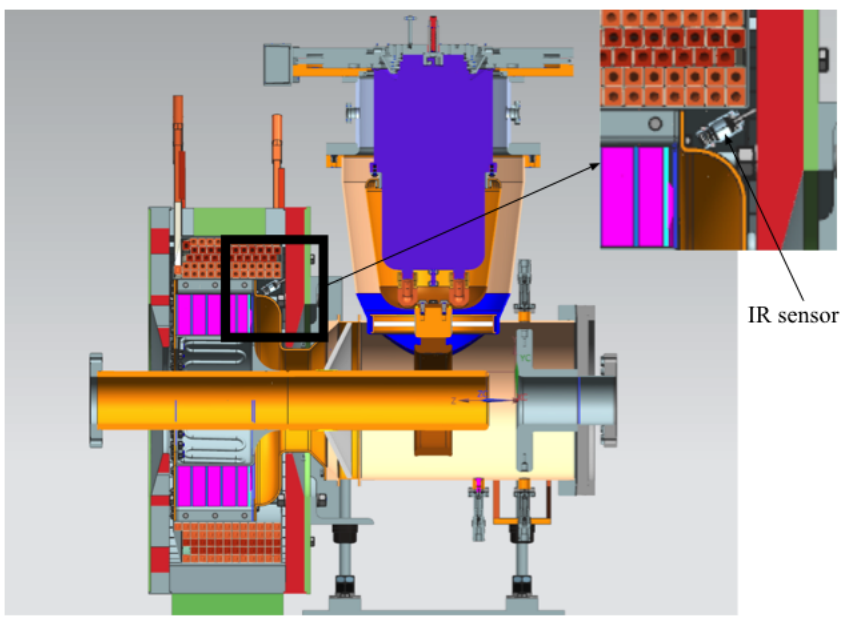

Figure 123: The IR sensor is mounted between the tuner and the solenoid. It peers at the front face of the tuner through a hole drilled through the tuner shell.

The IR sensor is made by Micro-Epsilon, model `CTF-SF15-C15` [48]. This sensor has a measurement time of 4 ms and an analog output response time of 9 ms.

18.1.1 IR sensor test

We used a hotplate to heat a spare garnet ring (AL400) for the IR sensor test. We used a PTC temperature sensor (Model 311C) [49] that has a large surface area for the reference measurement. Since the PTC sensor required 2 minutes to equilibrate, we did not generate a plot of the IR sensor temperature versus PTC sensor temperature. Instead, we had the hot plate heat the garnet ring to about 150°C to check that the IR sensor did indeed give about the same temperature. We deemed that one data point is sufficient because the goal of the IR sensor was to trip the RF at this temperature which is about 50°C below the Curie point of the AL800 garnet (200°C). Figure 124 shows the measurement setup.

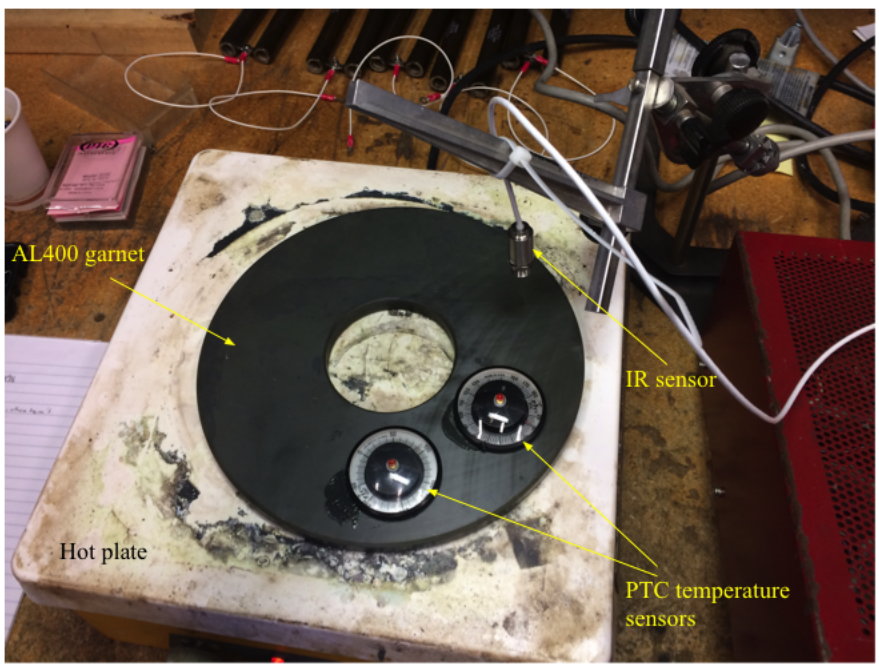

Figure 124: The IR test setup.

From the one measurement, we found when the PTC temperature sensor read 160°C, the IR sensor read 167°C. The fractional error between the two readings is 4%. This error is sufficiently small for the IR sensor to act as a safety device. Furthermore, this measurement also shows that it is not necessary to correct for the emissivity of the garnet in the IR.

19 High level RF (R. Padilla, R. Madrak)

Hello world

20 Installing the cavity

21 Operating the cavity

22 Acknowledgements

We would like to thank the following people:

1. G. Das and P. Oberbeck (National Magnetics Group/TCI Ceramics) for accommodating many of our requests during the manufacture of the garnet rings.
2. J. Reid (TOMCO) for quickly fixing the problems with the solid-state amplifier.
3. T. Berenc (ANL) for helpful discussions about the cathode resonator model.
4. F. Caspers (CERN) and C. Vollinger (CERN) for giving us information about their perpendicular cavity design.
5. S. Clement (CERN) for sending us their procedure for gluing their garnet sectors together and to the alumina.
6. V. Yakovlev (FNAL) for presenting his experiences with the SSC low energy booster perpendicular biased cavities at a special seminar for us.
7. P. Seifried (FNAL) and W. Mueller (FNAL) for multiple installations and de-installations of the solid-state amplifier during testing.
8. D. Plant (FNAL) for assembling and disassembling the PA test stand multiple times.
9. M. Henry (FNAL) for assembling the bias magnet power supply and its associated controls.
10. K. Koch (FNAL) for building the PLL module.
11. G. Bulat (FNAL) for getting our mechanical requisitions through the system in record time.
12. T.J. Gardner (FNAL) as liaison between us and Technical Division.

22.1 People

A Definition of shunt impedance

During the design of our cavity, there has been great angst about the definition of shunt impedance. It turns out that the source of the "confusion" is because there are two different definitions for shunt impedance. Accelerator physicists use one definition while RF engineers use another. The accelerator physicist's definition of shunt impedance, R_s', comes from how a charged particle gains energy after it travels through a cavity and the power loss, P_{rms}, of the cavity, (see for example, Edwards & Syphers [50], page 27, Eq. 2.22, and T.P. Wangler [51], page 42, Eq. 2.54) i.e.

$$R_s' = \frac{(eV_0/q)^2}{P_{\text{rms}}} \tag{48}$$

where eV_0 is the maximum energy gained by a particle of charge q after it goes through the cavity in units of eV. When we set $V_p = eV_0/q$ where we have defined V_p to be the equivalent peak voltage of a sine wave[6], we have

$$R_s' = \frac{V_p^2}{P_{\text{rms}}} \tag{49}$$

From the above, we can see that when we write down the physicist's definition of shunt impedance in this way, it becomes obvious why there is a factor of "2" between it and the engineer's definition. This is because the engineer's definition comes from the RLC circuit for a resonator and it is well known that the shunt impedance, R_s, is

$$R_s = \frac{V_p^2}{2P_{\text{rms}}} \tag{50}$$

Thus, since both power losses in terms of rms must be the same, we must have

$$\boxed{R_s = \frac{R_s'}{2}} \tag{51}$$

[6] Technically, the transit time factor T should be included in the definition of V_p. We have set $T = 1$ here. A more mathematical argument that shows the factor of "2" between the physicist's definition and engineer's definition of shunt impedance can be found in a technical note ref ??.

Therefore, since MWS uses the physicist's definition of shunt impedance, we have to divide its result by 2 to convert it to the engineer's definition. We also have to be careful to do the same for R/Q because the shunt impedance is embedded in there as well.

For other cavity parameters, we have to be careful when translating between MWS and the RF engineer's practical definitions. We have made a cheat sheet, shown in Table 9, for converting between the MWS definitions to the engineer's definitions.

MWS definition	Engineer's definition	Comments
$\boldsymbol{R_s'}$	$R_s = \frac{R_s'}{2}$	Shunt impedance definitions.
$\boldsymbol{P}_{\text{rms}} = \frac{\boldsymbol{V_{p,g}^2}}{\boldsymbol{R_s'}}$	$P_{\text{rms}} = \frac{V_{p,g}^2}{2R_s}$	P_{rms} is the same rms power loss in both cases. $V_{p,g}$ is the peak voltage in the gap.
$\boldsymbol{P}_{\text{rms}} = \frac{\boldsymbol{V_{p,\text{an}}^2}}{\boldsymbol{R_{\text{an}}'}}$	$P_{\text{rms}} = \frac{V_{p,\text{an}}^2}{2R_{\text{an}}}$	$V_{p,\text{an}}$ is the peak anode voltage. Again, the anode impedance definitions between the physicist and engineer is related by $R_{\text{an}} = \frac{R_{\text{an}}'}{2}$.
$\frac{\boldsymbol{V_g}}{\boldsymbol{V}_{\text{an}}} = \boldsymbol{k}$	$\frac{V_{p,g}}{V_{p,\text{an}}} = k$	k is the step up ratio. V_g is the rms gap voltage and V_{an} is the rms anode voltage.
$\boldsymbol{R_{\text{an}}'} = \boldsymbol{R_s'/k^2}$	$R_{\text{an}} = R_s/k^2$	After some manipulation, it can be shown that $R_{\text{an}} = \frac{R_{\text{an}}'}{2}$ as required.

Table 9: Cheat sheet for converting between the physicist's and engineer's definitions of cavity parameters.

B R/Q formula

The R/Q formula for an RLC circuit comes from Ref. [52], which we will derive here.

In a parallel RLC circuit, the admittance of the circuit is given by

$$Y(\omega) = \frac{1}{R} + \frac{1}{i\omega L} + i\omega C \equiv A + iB(\omega) \tag{52}$$

where R is the shunt resistance, L is the inductance and C is the capacitance of the RLC circuit.

When we look at the susceptance part of Y only, and differentiate it w.r.t. ω, we get

$$\frac{dB}{d\omega} = C + \frac{1}{\omega^2 L} \tag{53}$$

Since at resonance, $\omega_0 = 1/\sqrt{LC}$, this means that

$$\frac{dB}{d\omega} = \frac{1}{\omega_0^2 L} + \frac{1}{\omega^2 L} \tag{54}$$

Therefore, at resonance, we have

$$\left.\frac{dB}{d\omega}\right|_{\omega=\omega_0} = \frac{2}{\omega_0^2 L} \quad \Rightarrow \omega_0 L = 2\left(\omega_0 \left.\frac{dB}{d\omega}\right|_{\omega=\omega_0}\right)^{-1} \tag{55}$$

We recall that the quality factor Q of the parallel RLC circuit is given by $\mathrm{Q} = R/\omega_0 L$, [19] and thus

$$\boxed{R/Q = \omega_0 L = 2\left(\omega_0 \left.\frac{dB}{d\omega}\right|_{\omega=\omega_0}\right)^{-1}} \tag{56}$$

C Edit history

Date	Submitter	Changes
1 June 2017	G. Romanov	Added edits to section 2.1.
10 Jan 2018	C.Y. Tan	Added PLL section. Section 11.
12 Jan 2018	C.Y. Tan	Added MWS HOM modeling results. Section 7.1.2.
22 Jan 2018	C.Y. Tan	Added Bias Solenoid. Section 9.
30 Jan 2018	C.Y. Tan	Added Tuner. Section 8.
01 Feb 2018	C.Y. Tan	Added MWS model. Section 6.2.
08 Feb 2018	R. Madrak	Updated Y567B measurements. Section 14.
14 Feb 2018	R. Madrak	Added Thermal grease measurements. Section 5.
22 Feb 2018	I. Terechkine	Made suggested changes to sections 1, 2, 3, 4, 6, 8, 9, 14 and 15.
23 Feb 2018	C.Y. Tan	Recalculated flow rate in section 9.2.1.1 for 3 coils rather than for 6 coils.
27 Feb 2018	C.Y. Tan	Added bias curve section. Section 10.1 and 10.1.1.
01 Mar 2018	C.Y. Tan	Added holding sections 20, 21 and 22.1.
05 Mar 2018	C.Y. Tan	Updated bias ramp in section 10.1. Removed incorrect $\sqrt{2}$ scaling of step up ratio in Figure 35.
06 Mar 2018	G. Romanov	Fixed incorrect statements in section 8.7 and Figure 69. Added more cavity specifications in Table 2. Replaced “magnetic field” with “bias magnetic field” appropriately in all sections. Fixed typos, reformatted and updated sections 1, 2, 3, 6.2, 8.3, 8.6.3, 9.3.
08 Mar 2018	G. Romanov	Updated Figure 32, Figure 45, Figure 46.
08 Mar 2018	C.Y. Tan	Added section 18.1.

Bibliography

[1] W. Weng and J. Kats, "Effects of the second harmonic cavity on RF capture and transition crossing," in *XVth International Conf. on High Energy Accelerators*, Hamburg, Germany, 1992.

[2] C. Bhat and C. Tan, "Fermilab Booster Transition Crossing Simulations And Beam Studies," in *57th ICFA Advanced Beam Dynamics Workshop on High-Intensity and High-Brightness Hadron Beams*, Malmö, Sweden, 2016.

[3] C. Bhat, "R&D on beam injection and bunching schemes in the Fermilab Booster," in *Proceedings of HB2016*, Malmö, Sweden, 2016.

[4] T. Enegren and R. Poirier, "Parallel bias vs perpendicular bias of a ferrite tuned cavity for the TRIUMF KAON factory Booster ring," in *EPAC 1998*, Rome, Italy, 1988.

[5] C. P. and e. al, "Status of the SSC LEB RF Cavity," in *PAC 1993*, Washington DC, USA, 1993.

[6] R. Poirier, T. Enegren and I. Enchevich, "AC bias operation of the perpendicular biased ferrite tuned cavity for the TRIUMF KAON factory Booster Synchrotron," San Francisco, CA, USA, 1991.

[7] R. Madrak, "A new slip stacking RF system for a twofold power upgrade of Fermilab's Accelerator Complex," *Nucl. Instrum. Meth.,* vol. A758, pp. 15-25, 11 September 2014.

[8] J. MacLachlan and J.-F. Ostiguy, "ESME," 12 September 2016. [Online]. Available: http://esme.fnal.gov/.

[9] C. Bhat and e. al, "Transition crossing in proton synchrotrons using a flattened RF wave," *Phys. Rev. E,* vol. 55, no. 1, pp. 1028-1034, January 1997.

[10] X. Yang, A. Drozhdin and W. Pellico, "Transition crossing simulation at the Fermilab Booster," in *Particle Accelerator Conference*, Albuquerque, New Mexico, 2007.

[11] C. Bhat and C. Tan, "Fermilab Booster transition crossing simulations and beam studies," in *Proceedings of HB2016*, Malmö, Sweden, 2016.

[12] W. Merz, C. Ankenbrandt and K. Koepke, "Transition jump system for the Fermilab Booster," Batavia, IL, 1987.

[13] X. Yang, V. Lebedev and C. Ankenbrandt, "Reducing the Longitudinal Emittance of the 8-GeV Beam via the RF Manipulation in a Booster Cycle," Batavia, IL, 2005.

[14] C. Bhat, *2nd harmonic RF for the bunch rotation,* 2016.

[15] National Magnetics Group, "Garnets - Aluminum Doped," [Online]. Available: http://www.magneticsgroup.com/pdf/p8-13%20Magnetic.pdf.

[16] W. Smythe, T. Enegren and R. Poirier, "A versatile RF cavity mode damper," in *EPAC 90*, Nice, France, 1990.

[17] R. Madrak, G. Romanov and I. Terechkine, "TD-15-005," 2015. [Online]. Available: https://web.fnal.gov/organization/TDNotes/Shared%20Documents/2015%20Tech%20Notes/TD-15-005.pdf?Web=1.

[18] R. Madrak, G. Romanov and I. Terechkine, "TD-15-004," 2015. [Online]. Available: https://web.fnal.gov/organization/TDNotes/_layouts/15/WopiFrame.aspx?sourcedoc=/organization/TDNotes/Shared%20Documents/2015%20Tech%20Notes/TD-15-004.pdf&action=default.

[19] D. Pozar, Microwave Engineeering, 4th Edition ed., John Wiley & Sons, 2011, p. 276.

[20] V. Shapiro, "Magnetic losses and instabilities in ferrite garnet tuned RF cavities for synchrotrons," *Particle Accelerators,* vol. 44, no. 1, pp. 43-63, 1994.

[21] Henkel Adhesives, March 2015. [Online]. Available: http://www.henkel-adhesives.com/product-search-1554.htm?nodeid=8802585018369.

[22] MG Chemicals, "8616 - Super Thermal Grease II," MG Chemicals, 2018. [Online]. Available: https://www.mgchemicals.com/products/greases-and-lubricants/thermal-greases/super-thermal-grease-ii-8616.

[23] Wolfram Research, 2015. [Online]. Available: www.wolfram.com.

[24] Keysight Technologies, Oct 2015. [Online]. Available: http://www.keysight.com/en/pc-1297113/advanced-design-system-ads?cc=US&lc=eng.

[25] G. Romanov, "2nd harmonic RF perpendicular biased cavity update (02 Mar 2017)," 02 March 2017. [Online]. Available: http://beamdocs.fnal.gov/AD-public/DocDB/ShowDocument?docid=5342.

[26] G. Romanov and D. Sun, " 2nd harmonic RF perpendicular biased cavity update (16 June 2016)," 16 June 2016. [Online]. Available: http://beamdocs.fnal.gov/AD-public/DocDB/ShowDocument?docid=5175.

[27] G. Romanov, " 2nd harmonic RF perpendicular biased cavity update (30 June 2016)," 30 June 2016. [Online]. Available: http://beamdocs.fnal.gov/AD-public/DocDB/ShowDocument?docid=5183.

[28] W. Peter, R. Faehl, A. Kadish and L. Thode, "Criteria for vacuum breakdown in RF cavities," in *1983 Particle Accelerator Conference*, Santa Fe, NM, USA, 1983.

[29] G. Romanov, "2nd harmonic RF perpendicular biased cavity update (22 Jun 2017)," 22 June 2017. [Online]. Available: http://beamdocs.fnal.gov/AD-public/DocDB/ShowDocument?docid=5567.

[30] MDC Vacuum Products, LLC, "Del-Seal Mount -- Single ended (Part number 9242000)," 2014. [Online]. Available: https://www.mdcvacuum.com/DisplayPart.aspx?d=MDC&wr=US&p=9242000.

[31] U. Weinands and others, "The LEB Book," 1994.

[32] V. Paramonov, "The proposal of complex impedance termination for versatile HOM damper cavity," in *PAC 1995*, Dallas, TX, USA, 1995.

[33] Los Alamos Accelerator Code Group, 2013. [Online]. Available: http://laacg.lanl.gov/laacg/services/download_sf.phtml.

[34] R. Carter, "Review of RF power sources for particle accelerators," in *Proceedings RF engineering for particle accelerators*, Oxford, UK, 1991.

[35] R. Carter, "RF power generation," 2011. [Online]. Available: https://arxiv.org/ftp/arxiv/papers/1112/1112.3209.pdf.

[36] I. Terechkine and G. Romanov, "Reduction of the RF Loss in the Garnet Material of a Tunable Cavity by Optimizing the Magnetic Field Distribution Using Shimming," 08 March 2016. [Online]. Available: https://web.fnal.gov/organization/TDNotes/Shared%20Documents/2016%20Tech%20Notes/TD-16-007.pdf.

[37] I. Terechkine, "Eddy Currents in the Tuner of the 2-nd Harmonic Booster Cavity," 10 April 2017. [Online]. Available: https://web.fnal.gov/organization/TDNotes/Shared%20Documents/2017%20Tech%20Notes/TD-17-003.pdf.

[38] I. Terechkine and G. Romanov, "Evaluation of Temperature Distribution in the Tuner of the FNAL Booster's Tunable Second Harmonic Cavity," 19 February 2016. [Online]. Available: https://web.fnal.gov/organization/TDNotes/Shared%20Documents/2016%20Tech%20Notes/TD-16-002.pdf.

[39] I. Terechkine, *email dated 19 Jan 2018,* Batavia, IL, 2018.

[40] I. Terechkine, "Magnetic Bias System for the Second Harmonic Cavity of the FNAL Booster," 12 July 2016. [Online]. Available: https://web.fnal.gov/organization/TDNotes/Shared%20Documents/2016%20Tech%20Notes/TD-16-012.pdf.

[41] R. Best, Phase locked loops, design, simulation and applications, New York, NY: McGraw-Hill, 1999.

[42] T. Berenc and J. Reid, 2001. [Online]. Available: http://rf.fnal.gov/global/technotes/TN/TN023.pdf.

[43] Tomco Technologies, "TOMCO 8kW CW RF amplifier model BT8K ALPHA," Tomco

Technologies, Stepney, Australia, 2016.

[44] R. Madrak, J. Reid, M. Slabaugh and C. Tan, 22 March 2017. [Online]. Available: http://beamdocs.fnal.gov/AD-public/DocDB/ShowDocument?docid=5350.

[45] Richardson Electronics, July 2001. [Online]. Available: http://www.relltubes.com/products/Electron-Tubes-Vacuum-Devices/Tetrode/4CW150000E.html.

[46] J. Dey and D. Wildman, "Higher Order Modes of the Main Ring Cavity at Fermilab," in *Particle Accelerator Conference*, Piscataway, NJ, USA, 1995.

[47] G. Jackson, "Review of Impedance Measurements at Fermilab," Batavia, 1990.

[48] Micro-Epsilon , "Infrared temperature sensors for universal measurements," Micro-Epsilon, 2018. [Online]. Available: https://www.micro-epsilon.com/temperature-sensors/thermoMETER_CT_basic/.

[49] PTC Instruments, "Model 311C Celsius 20° to 180° C Fully Enclosed Sealed Surface Thermometer," PTC Instruments, 2018. [Online]. Available: http://ptc1-com.3dcartstores.com/Thermometer-311C.

[50] D. Edwards and M. Syphers, An introduction to the physics of high energy accelerators, New York, NY: John Wiley & Sons, 1993.

[51] T. Wangler, RF linear accelerators, 2nd edition ed., Verlag: Wiley-VCH, 2008.

[52] T. Enegren and R. Poirier, "Analysis of Booster amplifier design," in *Proceedings of the advanced hadron facility accelerator design workshop*, Los Alamos, NM, USA, 1988.

[53] F. Niell, *Private communication,* 2015.