# Toward High-Intensity Ionization Chambers in Switchyard

Adam Watts

EBD weekly meeting

17 May 2018

# Motivation

- Ionization chambers provide intensity monitoring for beam with very low per-bunch charge, where toroids/DCCTs become infeasible due to low signal.
- Traditionally, we use $ArCO_2$ gas and a clearing voltage of 800 V in our low-intensity ion chambers. Studying whether lower-ionization gas (Nitrogen, Helium) or different clearing voltage can push ion chambers to higher beam intensity.
- We use SEMs for high-intensity monitoring because our traditional ion chamber setups saturate around 1-2E12 per pulse. SEMs are very expensive (~$30,000), put more material in the beam than ion chambers, and must be re-calibrated because the secondary electron yield of the signal foils decreases over time.
- Using ion chambers for high-intensity monitoring would save money and time: $500 per chamber, and continuous foil calibrations not strictly necessary.

# Schoo Ionization Chambers

- The Schoo chambers consist of a signal foil surrounded by high-voltage foils, which are then surrounded by ground foils to isolate the system from outside noise. Foils are 1.5 mil thick coated mylar.
- Signal foil connected to digitizer represents a virtual ground; negative high-voltage means signal is from collected positive ions.
- Gas is usually $ArCO_2$ for low-intensity monitoring, HV = -800V

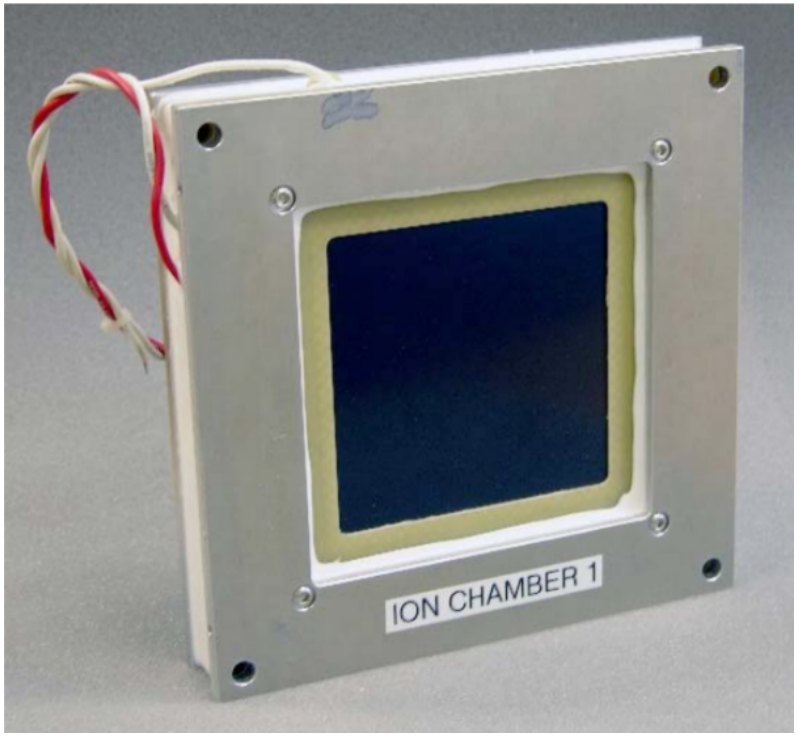


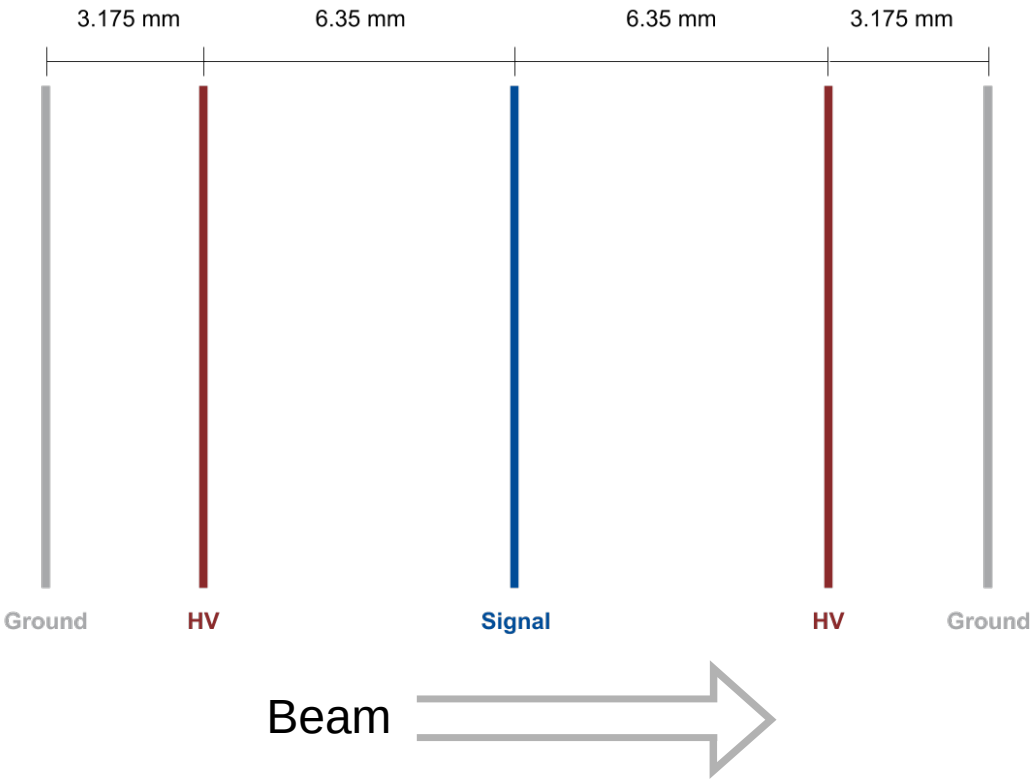

# Schoo Digitizers

- Dan's digitizers convert the ionization current to a voltage, which is then converted to a pulse-train with maximum frequency of 100 kHz.
- Pulse train is summed through a Jorway scalar counting module
- Input capacitor provides charge storage and will “meter out” charge to the electrometer in the event that it becomes saturated; this prevents mis-counted charge at high rate.
- Important that the scalar module is read at least 10 charge-storage time constants after end of beam to ensure total counting. Worked with Dan to set time constant to 200 ms so reading on the $37 (end-of-spill +2s) is sufficient.

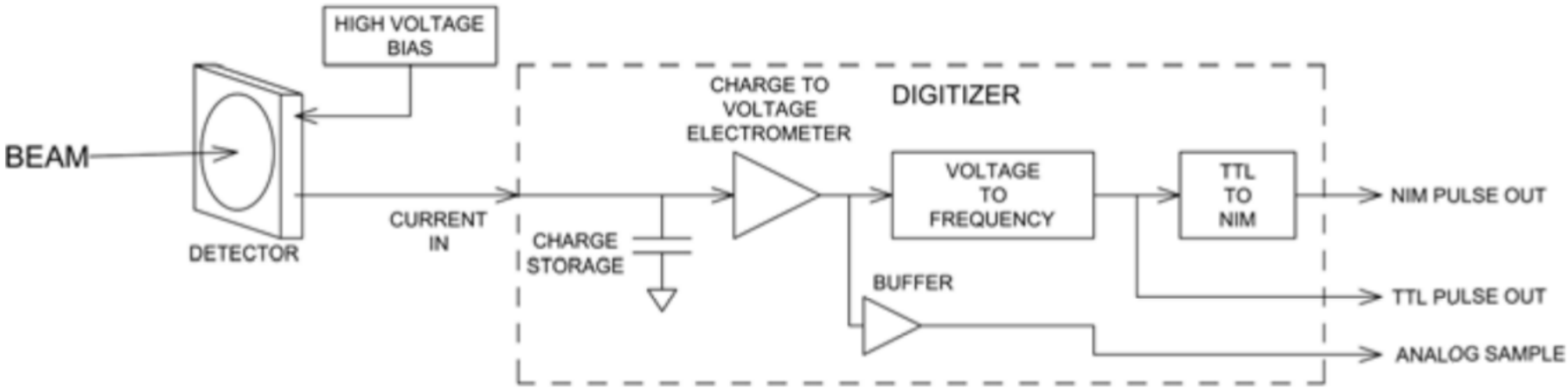

# Schoo Digitizers, Sensitivity

- Electrometer gain can be adjusted independent of the time constant to change the digitizer sensitivity (counts per picoCoulomb). AD549K feedback resistor (circled in red) determines gain, 10 counts per MOhm per nC.
- Default was 500 c/nC, but we discovered that at high beam intensity we were limited by the voltage-to-frequency converter's 100 kHz maximum output rate.
- By monitoring the “analog out” signal, which is the output of the electrometer before the voltage-to-frequency converter, we can tell if the digitizer is saturating: 10V corresponds to a 100 kHz pulse rate.
- For the high-intensity ion chamber tests, we ended up changing the sensitivity to 1 c/nC, still with the 200 ms time constant.

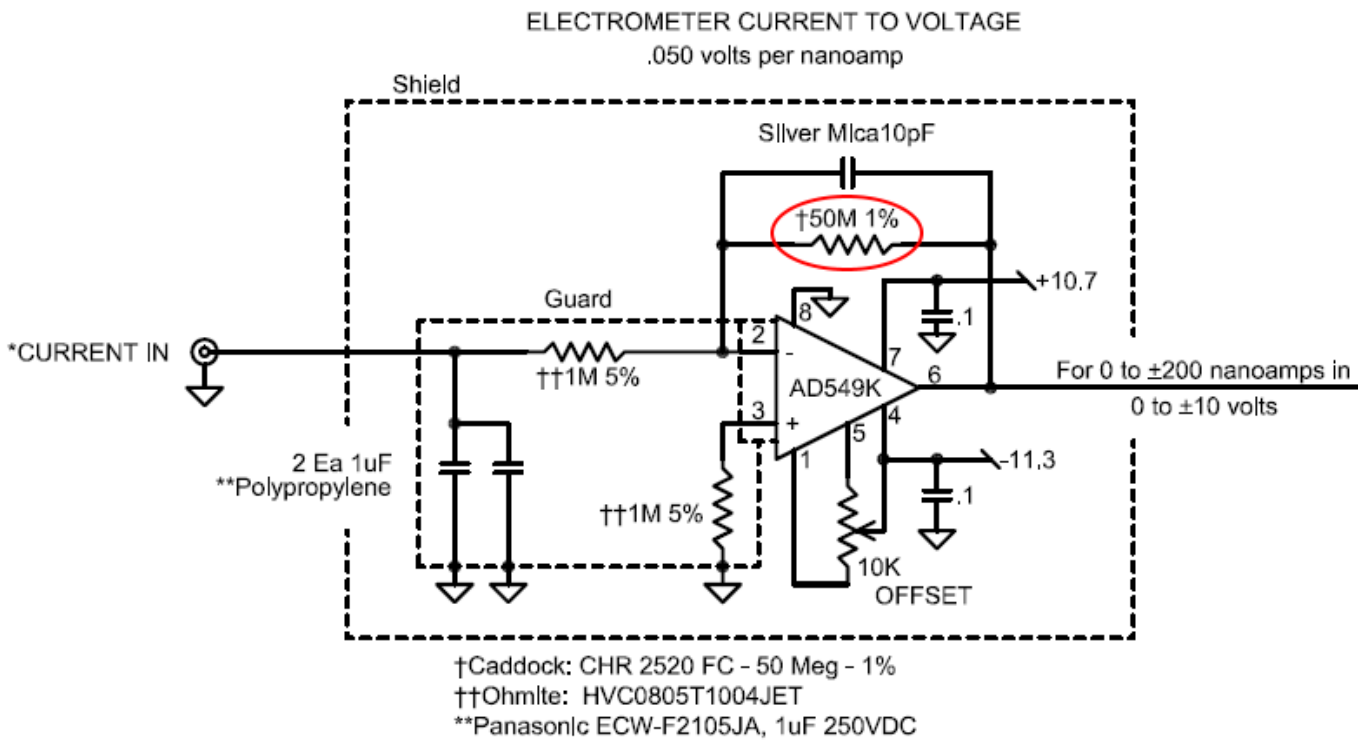

# Schoo Digitizers, Sensitivity

- Electrometer gain can be adjusted independent of the time constant to change the digitizer sensitivity (counts per picoCoulomb).
- Default was 500 c/nC, but we discovered that at high beam intensity we were limited by the voltage-to-frequency converter's 100 kHz maximum output rate.
- By monitoring the “analog out” signal, which is the output of the electrometer before the voltage-to-frequency converter, we can tell if the digitizer is saturating: 10V corresponds to a 100 kHz pulse rate.
- For the high-intensity ion chamber tests, we ended up changing the sensitivity to 1 c/nC, still with the 200 ms time constant.

Helium, 200V, 500 c/nC

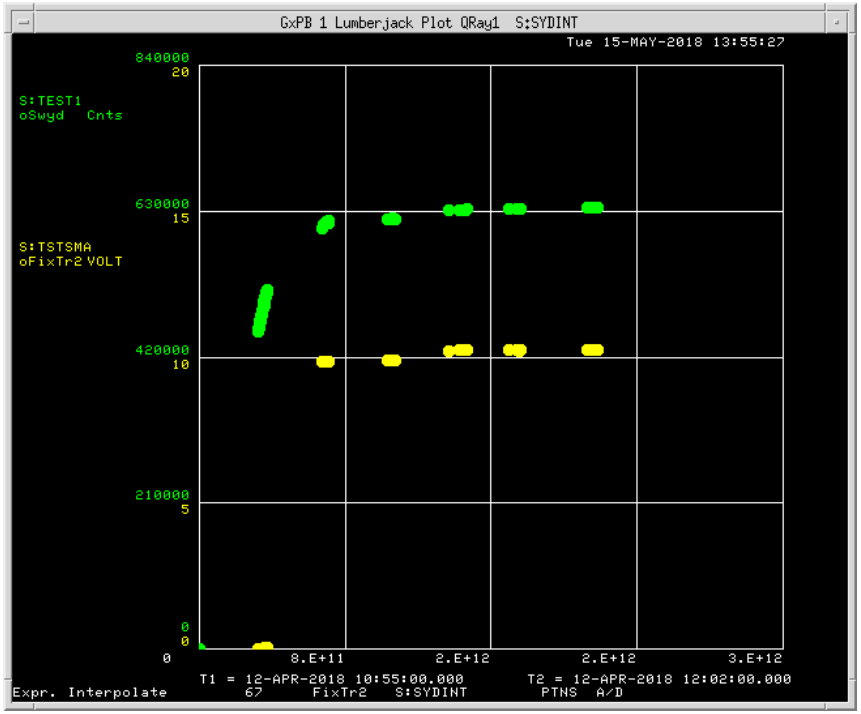


Helium, 200V, 1 c/nC

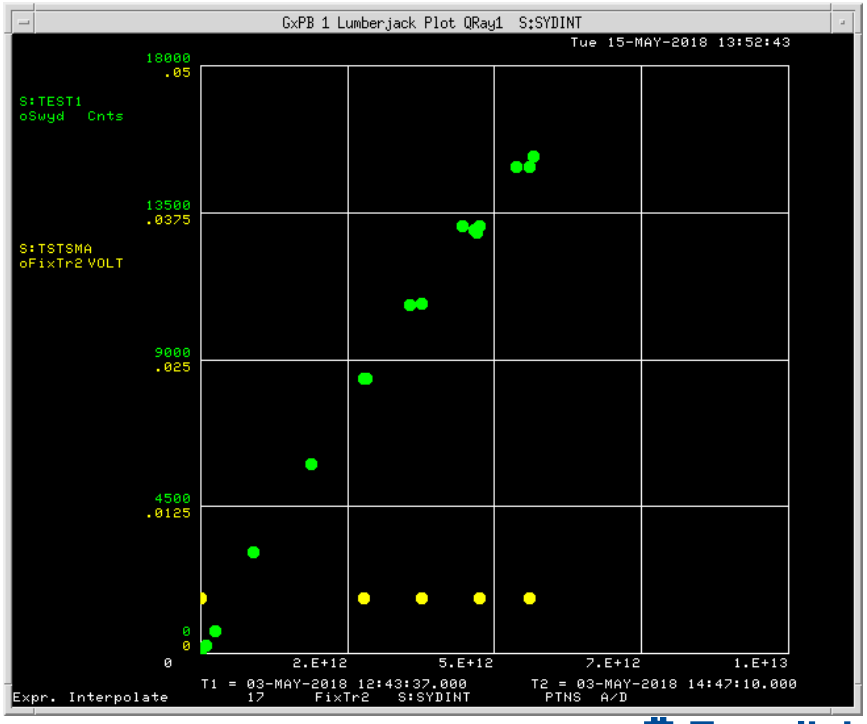

# Linear approximation at high-intensity

- For foil calibration of SEM, counting lab estimates ~8% systematic error. Determines error band.
- Apply naive linear fit to all scan data, compute residuals normalized to error band half-width

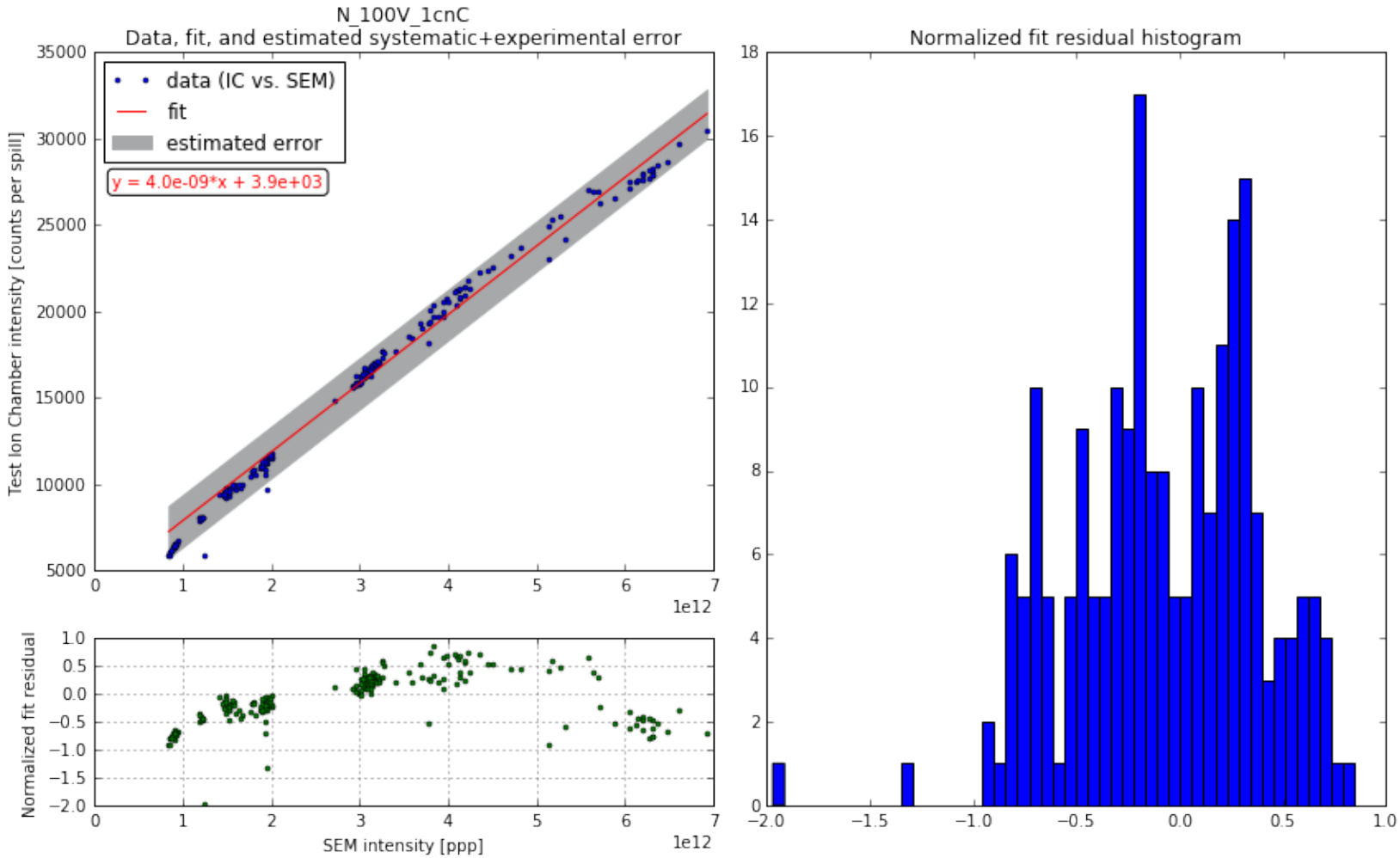

# Gas comparison

- $ArCO_2$ produces more electron-ion pairs than Nitrogen or Helium. Early idea was that lower ionization cross-section meant could go to higher intensity with linear response.
- Linear cutoff intensity for each scan is intensity at which chi-squared per degree of freedom of linear fit is minimized.
- No clear improvement in linearity from these scans. More intelligent choice of voltage needed.

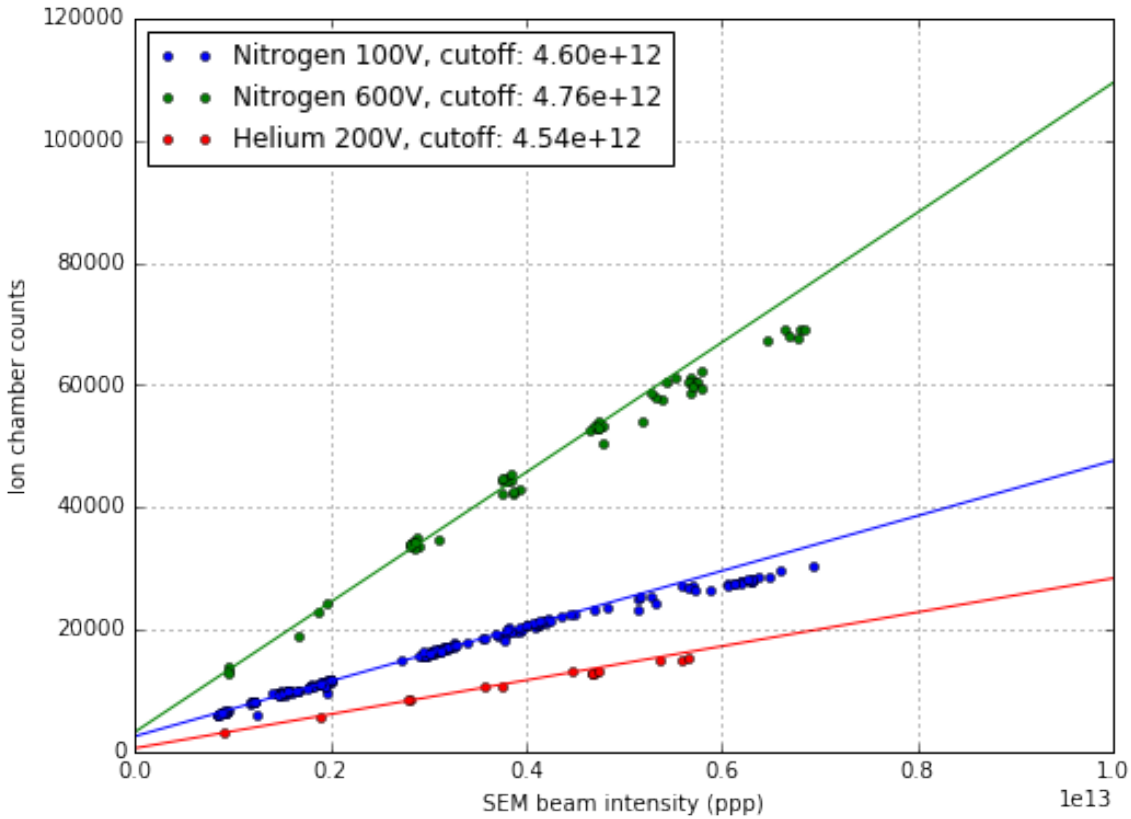

# Voltage scan

- Mapping out ionization curve of the chamber with different gases; plan to do ArCO2 ASAP.
- Helium voltage maxed out due to breakdown, Nitrogen due to power supply output limit
- May be able to find Nitrogen or ArCO2 proportional region with higher-voltage supply, could help mitigate space charge effect leading to recombination at high intensity.

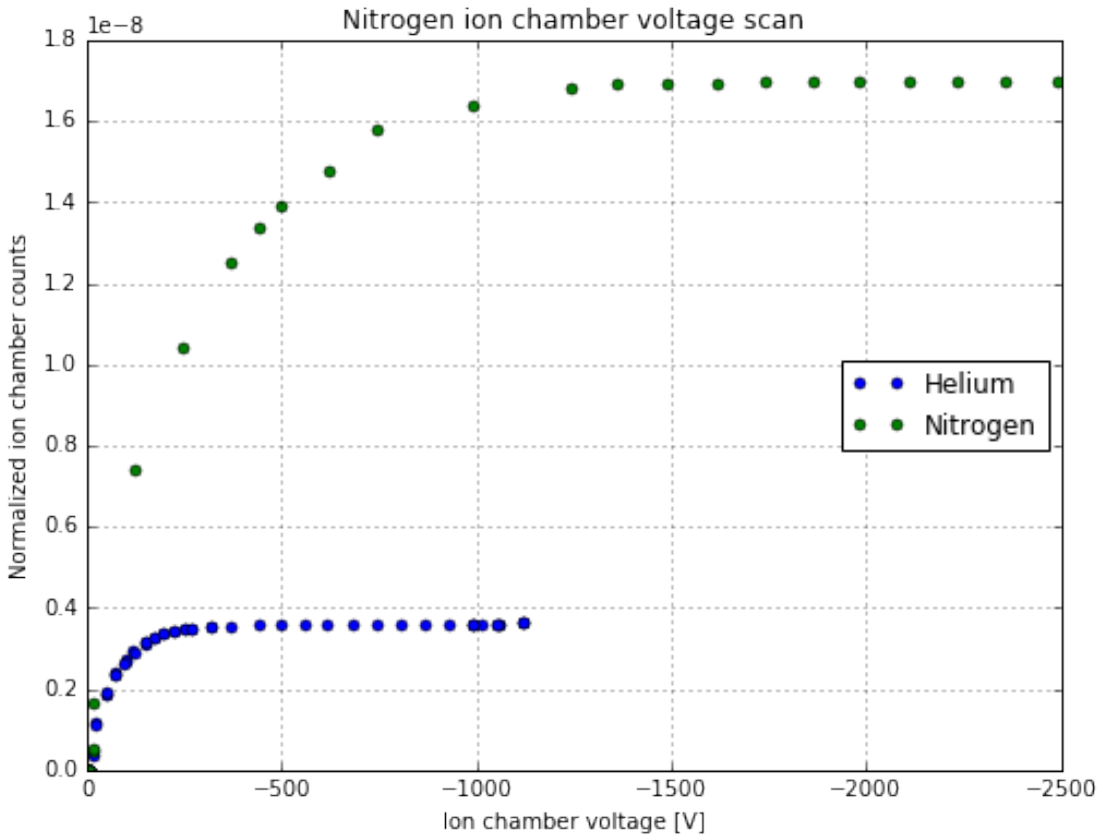

# More work to be done

- Voltage scan for ArCO2 to map out ionization curve. May be able to run in proportional region, which may improve linearity at high intensity.
- ArCO2 intensity scan at highest-possible clearing voltage. If proportional region available, compare proportional to ion chamber region (2 scans total).
- Nitrogen scan at highest-possible voltage, now that I know it from the voltage scan
- Helium scan at highest-possible voltage, now that I know it from the voltage scan
- Reverse bias the ion chamber to collect electrons instead of positive ions; electrons have much higher drift velocity, less affected by space-charge-induced recombination?