Mathematical Description of the Booster LLRF Controls

Early Draft Version January 7, 2008

Craig Drennan
January 7, 2008

Contents

I. Introduction 3

II. The Acceleration Phase Lock Loop 4

II.1 The Phase Detector 4

II.2 The Loop Filter 4

II.3 The Digital Frequency Source VXI Module 6

II.4 The Acceleration Phase Loop Analysis 6

II.4.1 Analysis as a Sampled Data System 6

II.4.2 Analysis as a Continuous Time System 9

III. Radial Position Control Loop 11

III.1 Radial Position Control Transfer Functions 11

III.2 Radial Position Control State Variable Representation 14

APPENDIX A: Units for Momentum, Magnetic Field and Radius 17

APPENDIX B: Computing the Expected Magnetic Field 18

REFERENCES 20

I. Introduction

This is an early draft which collects the gains and transfer functions of the electronic modules that implement the Booster LLRF control. Future additions to this document will include a representation of the Booster beam dynamics. This will describe the relationships between jRF voltage and phase, bending magnet magnetic field, beam momentum, and beam radial position.

The end goal is to understand and model the Booster and the LLRF controls sufficiently that modifications can be made to the LLRF controls with confidence that we will have not only a working system when we are done, but also and improved system.

II. The Acceleration Phase Lock Loop

The Acceleration Phase Lock Loop measures the phase difference between the Booster beam bunch phase and the phase of the LLRF Digital Frequency Source (DFS) VXI module. The phase difference adjusts the DFS frequency output to regulate this phase difference. A block diagram of this phase-lock-loop is given in Figure II.1

II.1 The Phase Detector

The Fast Phase Detector provides a voltage output proportional to the phase difference between the RF sine wave voltage generated from the beam pickup and the "delayed" LLRF reference sine wave. The output is {-10 to +10 Volts} ⇔ {0, 180 degrees}. This give us the following:

$$K_{\varphi} = 0.11\,\frac{Volts}{Degree} = 6.37\,\frac{Volts}{Radian} \qquad \text{Eq II.1}$$

The phase detector has a -3dB low-pass roll off at 1 MHz. This gives the full phase detector transfer function as:

$$G_{PD}(s) = \frac{1}{s}\cdot K_{\varphi}\cdot\frac{6.283\times10^{6}}{6.283\times10^{6}+s} = \frac{40.023\times10^{6}}{s\,(6.283\times10^{6}+s)}\;\frac{Volts}{Radian} \qquad \text{Eq II.2}$$

Neglecting the 1 MHz roll off we get:

$$G^{*}{}_{PD}(s) = \frac{6.37}{s}\;\frac{Volts}{Radian} \qquad \text{Eq II.3}$$

II.2 The Loop Filter

The PLL loop filter used is a Lag-Lead type. Circuit analysis of the Detector Mode Control module results in the following transfer function between the input and output voltages.

$$G_1(s) = \frac{0.131\cdot(11.869\times10^{3}+s)}{(1.068\times10^{3}+s)}\;\frac{Volts}{Volt} \qquad \text{Eq II.4}$$

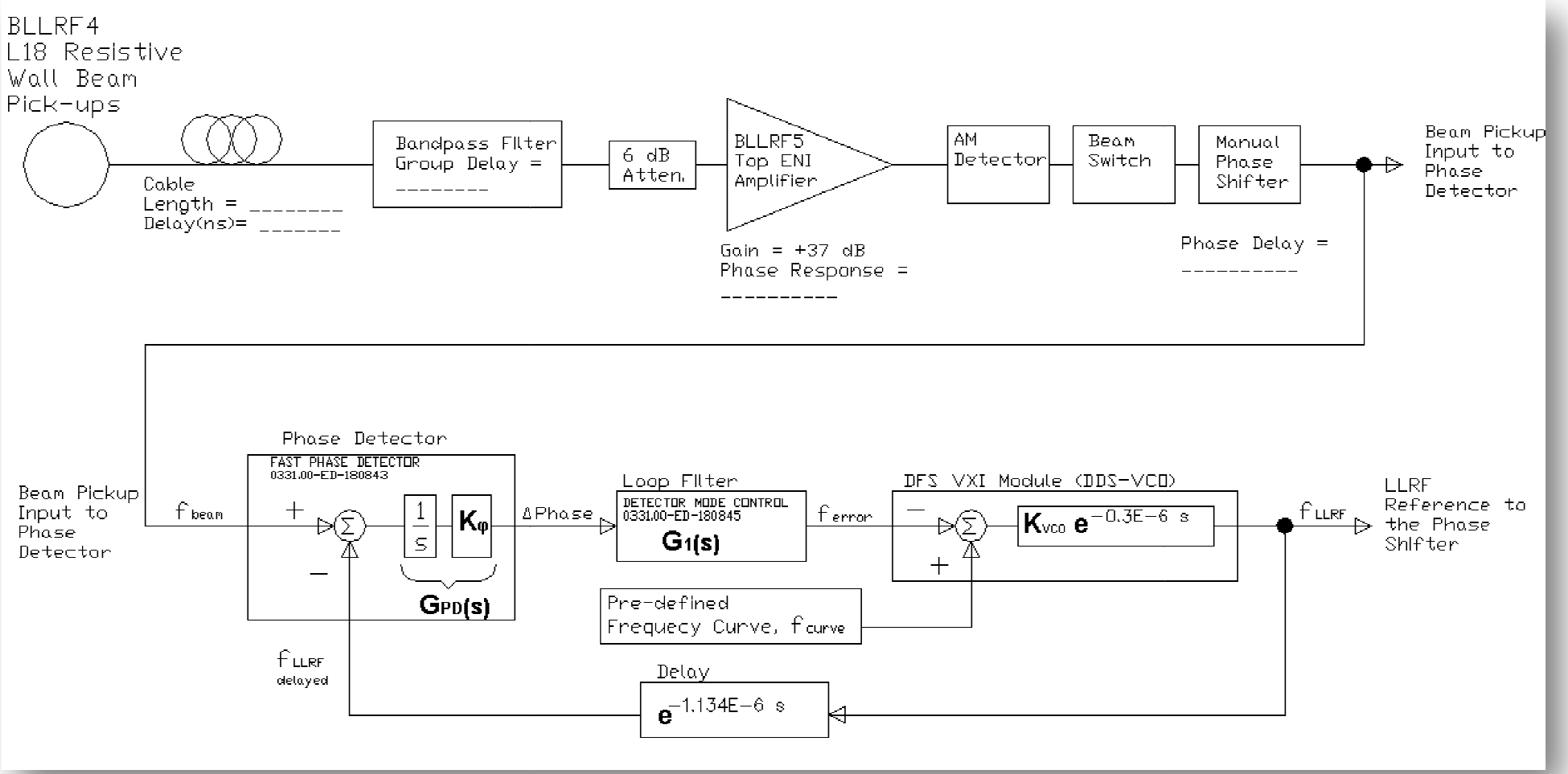

Figure II.1 Block Diagram of the Acceleration Phase Lock Loop.

II.3 The Digital Frequency Source VXI Module

The Digital Frequency Source (DFS) provides the LLRF reference sine wave that drives the voltage in the Booster accelerating cavities. The signal is produced digitally using a Stanford Telecom, STEL-2273A, direct digital synthesizer board (DDS). This is mainly a high speed, 8 bit DAC driven by a numerically controlled oscillator ASIC. The output of the DDS is controlled by writing Frequency Control Words from the DSP processor on the VXI module. The desired frequency is determined by a pre-defined frequency curve plus the error correction from the phase detector. The phase detector voltage is digitized by an Analog Devices AD872A, 12-Bit, 10 MSPS A/D Converter. A more detailed block diagram of the DFS VXI Module is given in Figure II.3.2.

From the information in Figure II.3.2 we can derive the overall gain and delay of the DFS.

$$K_{VCO} = 0.1\ \frac{Volt}{Volt} \cdot 2048\ \frac{Bits}{Volt} \cdot 256 \cdot 0.133877\ \frac{Hz}{Bit} = 7019\ \frac{Hz}{Volt} \qquad \text{Eq II.5}$$

$$G_2(s) = K_{VCO} \cdot e^{-0.34\times10^{-6}\cdot s} \qquad \text{Eq II.6}$$

II.4 The Acceleration Phase Loop Analysis

II.4.1 Analysis as a Sampled Data System

The phase error input to the DFS VXI module is digitized every 0.1 µs. The output frequency is updated every 1.0 µs. These two sampling instances are not synchronized in this module, but with good approximation we should be able to analyze this control loop as a “sampled data system” with a sampling period of 1.0 µs. A sampled data system is one having both continuous signals and discrete, sampled, signals.

The analysis of sampled data systems is covered in nearly every text with a chapter on digital control [1], [2]. The analysis allows the designed to arrive at a discrete-time transfer function with which digital control methods and analyses can be applied. However given the location of the sampler in this system we are not able to arrive at a discrete-time transfer function. This situation is described in the textbooks.

Just for the academics the analysis is worked through as far as it will go. You will not miss much if you skip to the next section.

The block diagram for our sampled data system is given in Figure II.4.1.1. Here we include the sampling switch and the contribution to the transfer function of the DFS by the addition of a sample and hold.

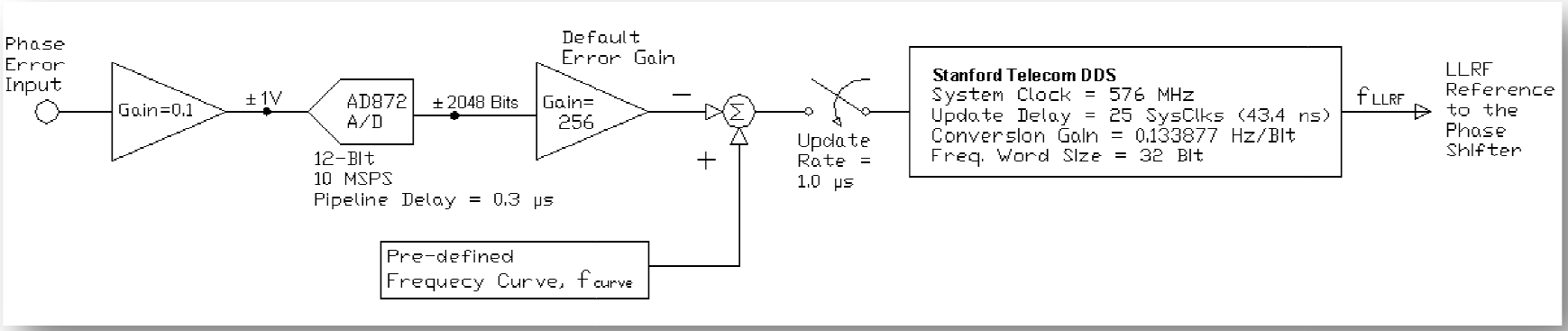

Figure II.3.2 Block diagram of the details of the DFS VXI module.

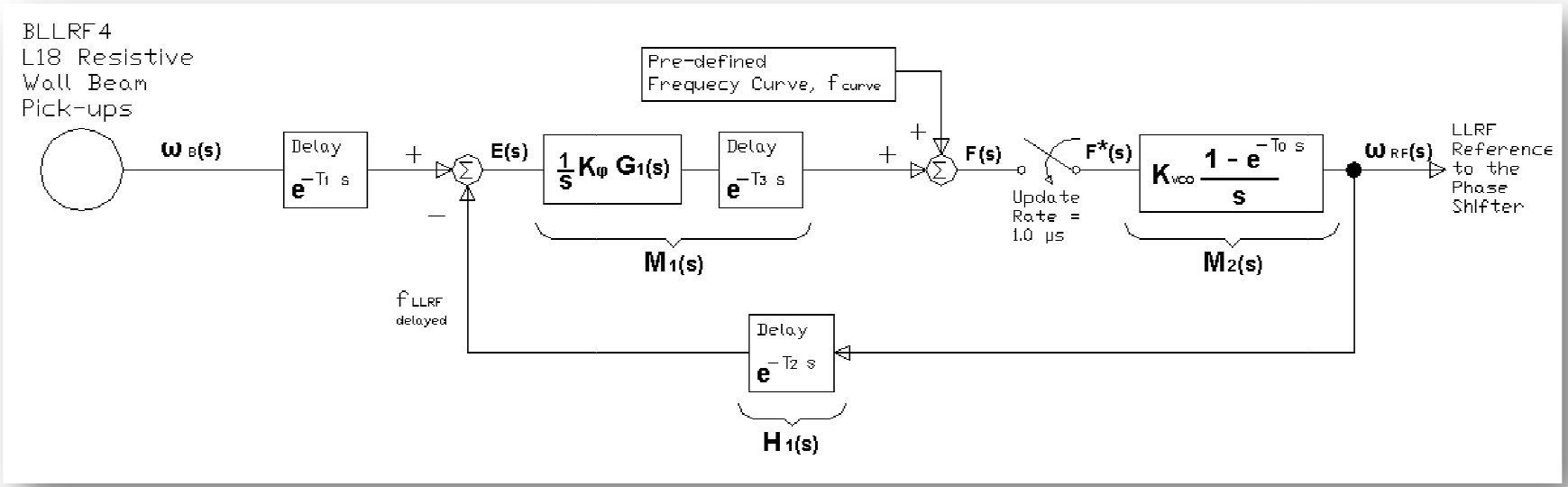

Figure II.4.1.1 Block diagram of the Acceleration Phase Control Loop as a sampled data system.

We define our continuous signals from the block diagram.

$$E(s) = e^{-T1\cdot s} \cdot \omega_B(s) - \ H_1(s) \cdot \omega_{RF}(s)$$

$$F(s) = M_1(s) \cdot E(s)$$

$$\omega_{RF}(s) = F^*(s) \cdot M_2(s)$$

Going to the sampled version of the signals we have

$$E^*(s) = [e^{-T1\cdot s} \cdot \omega_B(s)]^* - \ [H_1(s) \cdot \omega_{RF}(s)]^*$$

$$F^*(s) = [M_1(s) \cdot E(s)]^*$$

$$\omega_{RF}{}^*(s) = [F^*(s) \cdot M_2(s)]^* = F^*(s) \cdot M_2{}^*(s)$$

Solve for F^*.

$$F^*(s) = \left[M_1(s) \cdot \left(e^{-T1\cdot s} \cdot \omega_B(s) - \ H_1(s) \cdot \omega_{RF}(s)\right)\right]^*$$

$$F^*(s) = [M_1(s) \cdot e^{-T1\cdot s} \cdot \omega_B(s)]^* - \ [M_1(s) \cdot H_1(s) \cdot \omega_{RF}(s)]^*$$

$$F^*(s) = [M_1(s) \cdot e^{-T1\cdot s} \cdot \omega_B(s)]^* - \ [M_1(s) \cdot H_1(s) \cdot F^*(s) \cdot M_2(s)]^*$$

$$F^*(s) = [M_1(s) \cdot e^{-T1\cdot s} \cdot \omega_B(s)]^* - \ [M_1(s) \cdot H_1(s) \cdot M_2(s)]^* \cdot F^*(s)$$

$$F^*(s) = \frac{[M_1(s) \cdot e^{-T1\cdot s} \cdot \omega_B(s)]^*}{1 + \ [M_1(s) \cdot H_1(s) \cdot M_2(s)]^*}$$

Substitute F^* into the equation for $\omega_{RF}{}^*(s)$.

$$\omega_{RF}{}^*(s) = \frac{M_2{}^*(s) \cdot [M_1(s) \cdot e^{-T1\cdot s} \cdot \omega_B(s)]^*}{1 + \ [M_1(s) \cdot H_1(s) \cdot M_2(s)]^*}$$

We would want to have a transfer function in the form of $\omega_{RF}{}^*(s)/\omega_B{}^*(s)$. However $\omega_B{}^*(s)$ cannot be separated out in the equation for $\omega_{RF}{}^*(s)$ above. Oh what fun we could have had if we could have gotten a discrete transfer function. The explanation as to why we cannot get what we want is best stated by [1].

> This system displays an important fact that all our facile manipulations of samples may cause us to neglect: a sampled data system is *time varying*. The response depends on the time *relative to the sampling instant* at which the signal is applied. Only when the input samples alone are required to generate the output samples can we obtain a transfer function.

The problem with our configuration is that the output does not depend on the values of at the sampling instance, but it depends on the value of at the sampling instance AND previous values of through ( ).

II.4.2 Analysis as a Continuous Time System

With little justification other than to say that the 1 MHz sampling rate is more than 100 times the highest frequency component of our phase error signal, I will proceed to analyze the system as if it were not sampled.

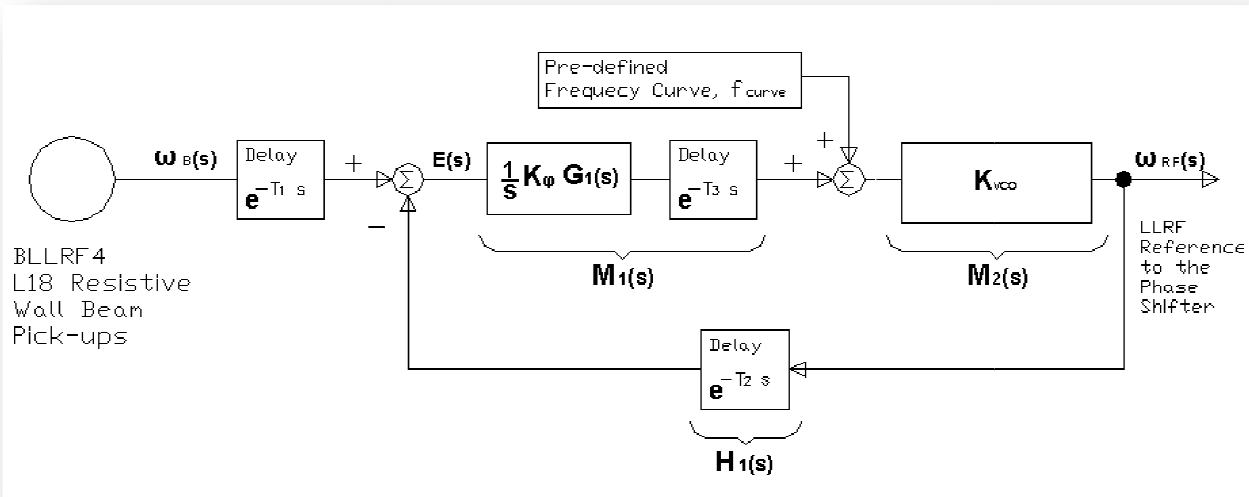

Figure II.4.2.1 The continuous time system block diagram.

Given the block diagram in Figure II.4.2.1 our transfer function between the beam frequency at the pickup and the output of the DFS is

We will use a (1,1) Pade' approximation for the delay terms.

Let , where

$$e^{-(T3+T2)\cdot s} = \frac{1-\partial_2 \cdot s}{1+\partial_2 \cdot s}\ ,\ \text{where}\ \ \partial_2 = \frac{T3+T2}{2}$$

And also let $\quad K_{RF} = K_\varphi \cdot K_{VCO} \cdot 0.131$

$$\frac{\omega_{RF}(s)}{\omega_B(s)} = \frac{K_{RF} \cdot \frac{(11.869 \times 10^3 + s)}{s \cdot (1.068 \times 10^3 + s)} \cdot \frac{1 - \partial_1 \cdot s}{1 + \partial_1 \cdot s}}{1 + K_{RF} \cdot \frac{(11.869 \times 10^3 + s)}{s \cdot (1.068 \times 10^3 + s)} \cdot \frac{1 - \partial_2 \cdot s}{1 + \partial_2 \cdot s}}$$

$$\frac{\omega_{RF}(s)}{\omega_B(s)} = \frac{K_{RF} \cdot (11{,}869 + s) \cdot (1 - \partial_1 \cdot s) \cdot (1 + \partial_2 \cdot s)}{s \cdot (1{,}068 + s) \cdot (1 + \partial_1 \cdot s) \cdot (1 + \partial_2 \cdot s) + K_{RF} \cdot (11{,}869 + s) \cdot (1 - \partial_2 \cdot s) \cdot (1 + \partial_1 \cdot s)}$$

$$\boxed{\frac{\omega_{RF}(s)}{\omega_B(s)} = \frac{A_3 \cdot s^3 + A_2 \cdot s^2 + A_1 \cdot s + A_0}{B_4 \cdot s^4 + B_3 \cdot s^3 + B_2 \cdot s^2 + B_1 \cdot s + B_0}}$$

Where,

$A_0 = K_{RF} \cdot 11{,}869$
$A_1 = K_{RF} \cdot \left(1 + 11{,}869 \cdot (\partial_2 - \partial_1)\right)$
$A_2 = K_{RF} \cdot \left(-11{,}869 \cdot \partial_1 \cdot \partial_2 + (\partial_2 - \partial_1)\right)$
$A_3 = K_{RF} \cdot (-\partial_1 \cdot \partial_2)$

$B_0 = K_{RF} \cdot 11{,}869$
$B_1 = \left(1{,}068 + K_{RF} + 11{,}869 \cdot K_{RF} \cdot (\partial_1 - \partial_2)\right)$
$B_2 = (1 + 1{,}068 \cdot (\partial_1 + \partial_2) + K_{RF} \cdot (\partial_1 - \partial_2) - 11{,}869 \cdot K_{RF} \cdot \partial_1 \cdot \partial_2)$
$B_3 = ((\partial_1 + \partial_2) + 1{,}068 \cdot \partial_1 \cdot \partial_2 - K_{RF} \cdot \partial_1 \cdot \partial_2)$
$B_4 = (\partial_1 \cdot \partial_2)$

Recall for the existing system

$K_{RF} = K_\varphi \cdot K_{VCO} \cdot 0.131$

$K_\varphi = 6.37 \frac{Volts}{Radian} \qquad K_{VCO} = 7019\ \frac{Hz}{Volt}$

$\partial_1 = \frac{T3+T1}{2}, \qquad \partial_2 = \frac{T3+T2}{2}$

III. Radial Position Control Loop

III.1 Radial Position Control Transfer Functions

The Radial Position Controller, also called the LLRF Phase Controller (Dwg# 0331.00-ED-63397), compares a Beam Position Monitor (BPM) measurement to a signal representing the desired radial position offset. From the difference or error between these two signals a phase shift in the LLRF reference to the RF cavities is determined. As will be described later, this phase shift will result in regulating the beam radial position. A block diagram of the Radial Position Controller is given in Figure III.1.1 and we will use this to describe the transfer function of the controller.

The radius of the Booster is 74.47 Meters. Marker: Check on actual effective Radius. The center of the BPM is assumed to sit at this radius, and the +/- position of the beam measured by the BPM is actually the radial offset of the beam from the Booster radius. This signal is referred to as RPOS in the documentation and in the ACNET control system. It is a positive signal for radiuses larger than the Booster radius and negative for radiuses smaller. The radial offset signal, ROFFF, has the opposite polarity. ROFFF is a curve that is defined by the physicists tuning the Booster, varying through the acceleration cycle.

Besides the error between RPOS and ROFFF, there are other system variables that drive the phase shift of the Low Level RF. Get description from Bill

The transfer functions and gains listed in the block diagram of Figure III.1.1 are the following

$$B(s) = BPM\ Modulator\ Transfer\ Function\ (TBD)$$
$$K_O = -2.5\ V/V$$
$$K_2 = +5\ V/V$$
$$RGAIN = Variable\ Gain\ Between\ 1\ and\ 0\ using\ an\ AD532$$
$$G_4(s) = \frac{-7.488\cdot(1+20x10^{-6}\ s)}{(1+321x10^{-6}\ s)}$$
$$G_5(s) = \frac{-0.4}{(1+660x10^{-6}\ s)}$$

Letting $K_R = K_O \cdot K_2 \cdot RGAIN$, the transfer function between RPERR and the PSDRV output is

$$\frac{PSDRV^1(s)}{RPERR(s)} = \frac{-7.488 \cdot K_R \cdot (1 + 20x10^{-6}\ s)}{(1 + 321x10^{-6}\ s)}$$

$$\frac{PSDRV^2(s)}{BDOT(s)} = \frac{-0.4}{(1 + 660x10^{-6}\ s)}$$

$$\frac{PSDRV^3(s)}{AUX2(s)} = 1.0$$

Also describe the Phase Shifter Module here Gain=9 degrees/Volt

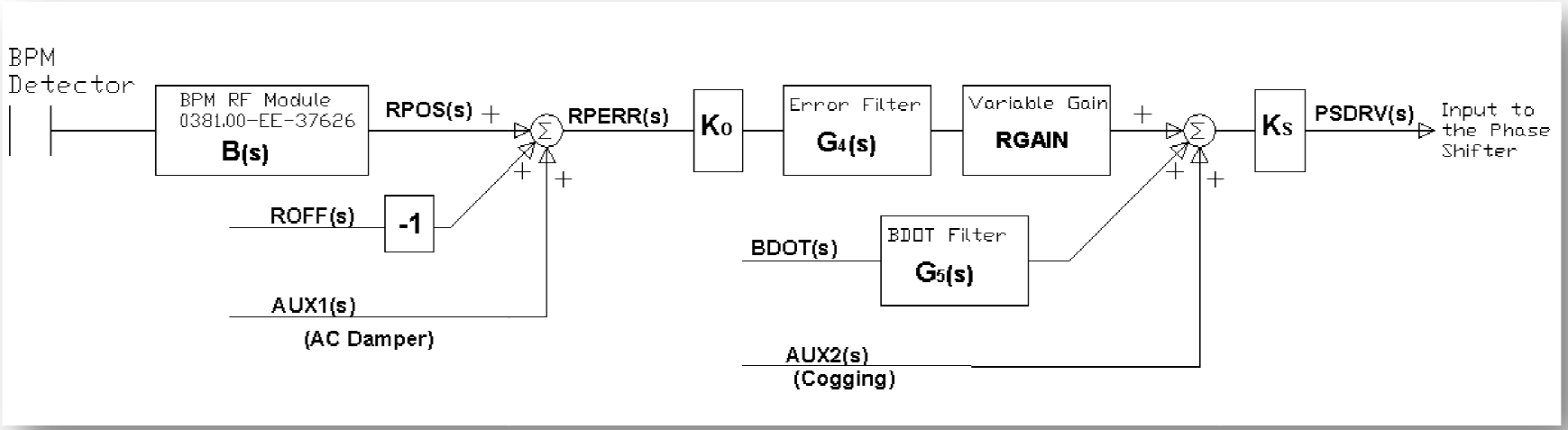

Figure III.1.1 Block Diagram of the Radial Position Controller (LLRF Phase Controller, 0331.00-ED-63397).

III.2 Radial Position Control State Variable Representation

As we advance with our modeling and analysis of our control system, we will find benefit in describing our systems using a state variable representation. Transfer functions are quite useful in describing the dynamics of the electronics since these are linear time-invariant circuits (with the exception of RGAIN which in reality is implemented as a time varying curve). However, once we begin to consider the accelerator beam dynamics we will want a representation of our dynamics that can model linear and non-linear systems, time-invariant and time varying, single variable and multi-variable systems in a unified manner. This is where linear algebra and a state variable representation of our system can help.

All modern controls text cover at least the basics of state variable analysis [2],[3]. To transform our set of transfer functions for the Radial Position Control into state variable form we will use a "Direct Decomposition" method using a signal flow graph to help visualize the transformation.

We start with the relationship for the RPERR input.

$$\frac{PSDRV^1(s)}{RPERR(s)} = \frac{-7.488 \cdot K_R \cdot (1 + 20x10^{-6}\, s)}{(1 + 321x10^{-6}\, s)}$$

We will alter the transfer function so that it only has negative powers of s, and then multiply the numerator and denominator by a dummy variable $X(s)$.

$$\frac{PSDRV^1(s)}{RPERR(s)} = \frac{(-7.488) \cdot K_R \cdot s^{-1} \; + \; (-7.488) \cdot K_R \cdot (20x10^{-6})}{s^{-1} + 321x10^{-6}} \cdot \frac{X(s)}{X(s)}$$

Using our dummy variable we can represent the numerator and the denominator separately.

$$PSDRV^1(s) = (-7.488) \cdot K_R \cdot (s^{-1} \cdot X(s)) \; + \; (-7.488) \cdot K_R \cdot (20x10^{-6}) \cdot X(s)$$

and

$$RPERR(s) = s^{-1} \cdot X(s) + \; 321 \times 10^{-6} \cdot X(s)$$

or

$$X(s) = \frac{1}{321 \times 10^{-6}} \cdot RPERR - \frac{1}{321 \times 10^{-6}} \cdot \left(s^{-1} \cdot X(s)\right)$$

Figure III.2 gives the state diagram for these equations, [2].

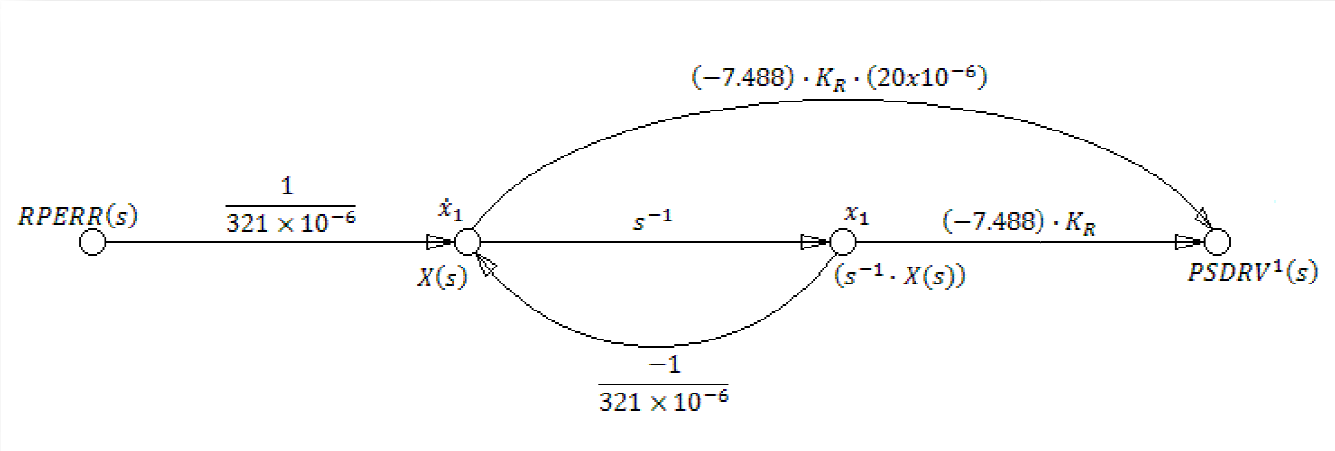

Figure III.2 State Diagram of the transfer function between RPERR and PSDRV[1] .

From this state diagram we can assign time variables to the nodes giving us the following state and output equations.

Simplifying these equations we get

Similarly we can find state variable expressions for the other transfer functions.

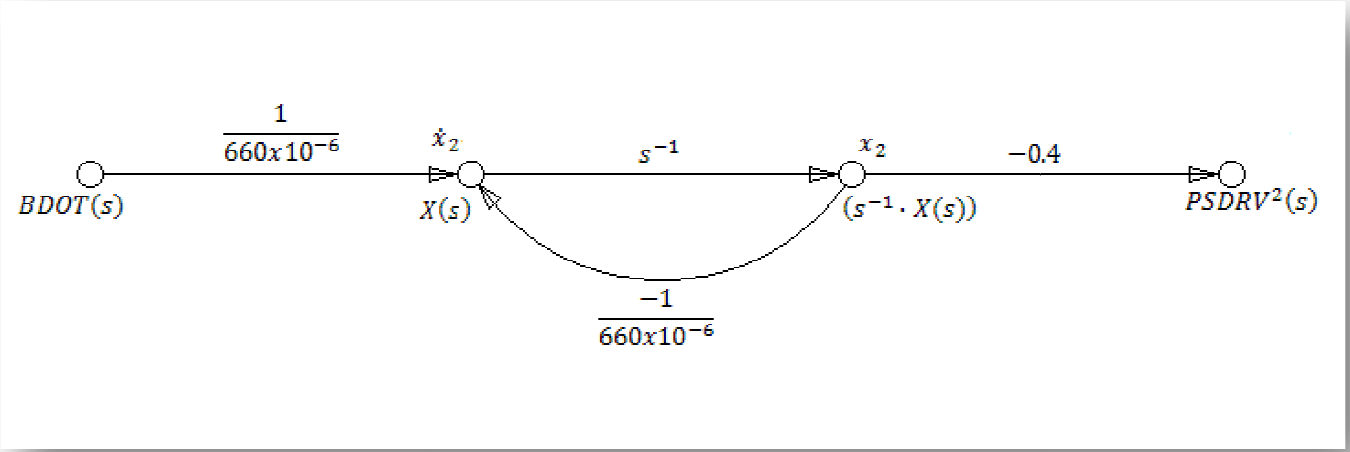

Figure III.3 State diagram of the transfer function between BDOT and $PSDRV^2$.

The final expression of our state variable equations in matrix form is

APPENDIX A: Units for Momentum, Magnetic Field and Radius

$$q\vec{V} \times \vec{B} = \frac{m \cdot \vec{v}^2}{\vec{R}}$$

$$q \cdot B \cdot R = m \cdot v = P$$

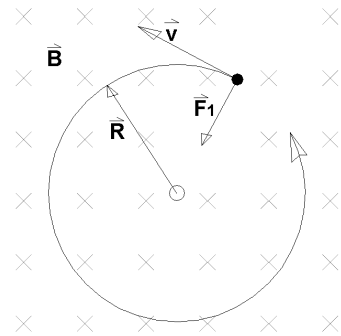

$F_1 = qv \times B = (mv^2/R)$

$$q \cdot (B \cdot R)[Tesla \cdot Meters] =$$

$$q \cdot (B \cdot R)\left[\frac{Weber}{Meters\text{^}2} \cdot Meters\right] =$$

$$q \cdot (B \cdot R)\left[\frac{Volt \cdot Second}{Meters\text{^}2} \cdot Meters\right] =$$

$$q \cdot (B \cdot R)\left[\frac{Volt}{Meters/_{Second}}\right] = (B \cdot R)\left[\frac{eV}{Meters/_{Second}}\right]$$

$$(B \cdot R)\left[\frac{eV}{Meters/_{Second}}\right] \cdot \left[\frac{2.998x10^8\ \ Meters/Second}{c}\right] \cdot \left[\frac{MeV}{10^6 \cdot eV}\right] =$$

$$299.8 \cdot (B \cdot R)\left[\frac{MeV}{c}\right] = P\left[\frac{MeV}{c}\right]$$

$$\boxed{P\left[\frac{MeV}{c}\right] = 299.8 \cdot B[Tesla] \cdot R[Meters]}$$

APPENDIX B: Computing the Expected Magnetic Field

Here we will make a comparison between what we ideally expect the magnetic field in the Booster bending magnets will be, versus B(t) derived from a measurement of dB(t)/dt and a set of assumptions about the measurement.

First recall from Appendix A our equation describing the relationship between momentum (P), the radius of orbit of the protons (R), and the bending magnetic field.

$$B(t)[Tesla] = \frac{P(t)\left[\frac{MeV}{c}\right]}{299.8 \cdot R[Meters]}$$

We also know that B(t) should have the following form.

$$B(t) = B_1 + B_2 \cdot Cos(2\pi \cdot 15 \cdot t)$$

Where

$$B_1 = B(0\ s) + B(33.3\ ms)$$
$$B_2 = B(0\ s) - B(33.3\ ms)$$

We can let R simply be the radius of the Booster and P(t=0 s) and P(t=33.3 ms) be determined by the expected beam energy injection and extraction, respectively.

$$P(t) \cdot c = \sqrt{(KE(t) + m_P)^2 - {m_P}^2}$$

For

$$KE(0\ s) = 401\ MeV$$
$$KE(33.3\ ms) = 8000\ MeV$$
$$m_P = 938.272\ MeV$$

We get

$$P(0\ s) = 955.7\ MeV/c$$
$$P(33.3\ ms) = 8888.9\ MeV/c$$

And then

$$B(0\ s) = 0.0428\ Tesla$$
$$B(33.3\ ms) = 0.3981\ Tesla$$

$$\boxed{B(t) = 0.4409 - 0.3553 \cdot Cos(2\pi \cdot 15 \cdot t)}$$

The question now is, how do we convert the measured voltage representing dB(t)/dt to arrive at a measured value of B(t). From TM-405, “Booster Synchrotron” 1976 design report, we get that the injection current is 74 Amps for an injection energy of 200 MeV. The momentum in this case is 644.446 MeV/c, and from our equation

with R=74.47 Meters, B(0 s) is 0.0289 Tesla. Our conversion between Amps through the windings and the resulting magnetic field is

$$K_B = \frac{0.0289\ Tesla}{74\ Amps} = 0.39 \times 10^{-3}\ \frac{Tesla}{Amp}$$

PICK IT UP HERE: DECIDE WHAT WE WANT TO REFERENCE TO GET AT THE TRUE Imin and Imax ?

REFERENCES

1. G. F. Franklin, J. D. Powell, “Digital Control of Dynamic Systems,” Reading, MA: Addison-Wesley, 1980, TJ216.F72.
2. B. C. Kuo, “Automatic Control Systems,” 5th ed., Englewood Cliffs, NJ, 1987, TJ213.K8354.
3. G. F. Franklin, J. D. Powell, “Feedback Control of Dynamic Systems,” 3rd ed., Reading, MA: Addison-Wesley, 1994, TJ216.F723.
4.