Achromatic Bends for Electron Transport at Fermilab

K.J. Bertsche
Fermi National Accelerator Laboratory
August, 1996

1. Basic Achromatic Bends

1.1 Advantages

Based on the success of Gerry Ramian at UCSB, we have decided to consider the use of simple first order achromats for all bends in the electron cooling beamline. A simple first-order achromatic bend is achieved by splitting the bend equally in two bend magnets, and placing a quadrupole lens between them.[1] This quadrupole cancels dispersion by imaging the center of the first bend magnet onto the center of the second. This places the two bend magnets 180° apart in betatron phase in the x-dimension.

Separating the two bend magnets by 180° in this manner causes particles of different energies to emerge at the same point and with the same angle, to first order. In addition, if the two bend magnets are operated from a common power supply, the 180° separation cancels the effects of any power supply drifts or ripple, again to first order. To first order, the quadrupole does not affect the nominal beam trajectory (it only affects focus and dispersion).

Thus, achromatic bends not only stabilize the beam trajectory against energy spreads or energy fluctuations in the beam, they also stabilize the trajectory against power supply fluctuations (assuming magnets separated by 180° are operated on common supplies). The error in beam trajectory is approximately the product of the errors of the dipole and quadrupole excitation. Thus, if the dipole and quadrupole supplies are each stable to 10^{-3}, the trajectory will behave similarly to going through a single bend magnet stabilized to 10^{-6}.

For a relativistic beam, achromatic transport is also isochronous. This is another essential feature for electron cooling if a recirculating electrostatic accelerator is used. If beam transport were not isochronous, energy fluctuations would affect the timing and modulate the instantaneous beam current, tending to destabilize the system.

---

[1] John J. Livingood, *The Optics of Dipole Magnets* (New York: Academic Press, 1969).

It is impossible to make a *second* order achromat with only two simple bends[2], and there is not enough space in the main injector tunnel to allow more bends to be used. However, due to the nominally parallel beam, not all second order aberration terms are important. It may be beneficial to curve the pole faces of the dipole magnets to cancel some of the remaining second order aberrations. Allowance has been made for this possibility in the dipole design for the 180° achromat.

2. System Design

2.1 Focusing

Beam profiles must be symmetric about the center of the quadrupole for the achromat to work properly. The dispersion function reaches a maximum at the center of the quadrupole. Since the quadrupole is defocusing in y, the y beam profile must have a waist at the center of the quadrupole. The x beam profile can either have a waist or a maximum at the center of the quadrupole. Generally, it is easier to design with a waist at the center (this results in less overall phase advance through the system).

The bend magnets will provide some focusing as well. If the ends are parallel to one another, there will be no focusing in the x direction, but there will be focusing in y. If the ends are normal to the beam trajectory, there will be significant focusing in x (the phase advance will be approximately the angular bend of the beam), but there will be virtually no focusing in y (ideally there would be absolutely no y focusing, but the effects of extended fringe fields give non-zero focusing effects). It is also possible to create an index (quadrupole component) in the magnets by sloping the poles.

For a total bend of 90° or less (i.e. 45° per dipole or less), it is probably simplest for the dipole magnets to have flat poles (no index) and with ends normal to the beam trajectories. For a bend of 180° (90° per dipole), the x-plane focusing is so strong that the dipoles almost certainly need to be designed with either an index or edge focusing.

2.2 Design Philosophy

It is desired to make the system symmetric about its midpoint to ensure achromaticity. In our case, it is desired to transport a nominally-parallel beam through the system, and for it to emerge nominally parallel.

---

[2]Karl L. Brown and Roger V. Servranckx, "First and Second Order Charged Particle Optics," SLAC-PUB-3381.

To create a vertical waist at the center of the quadrupole, there needs to be some vertical focusing either in the dipoles or in the non-dispersive region outside the bend. There may need to be some adjustment in both the vertical and horizontal focusing to account for improperly estimated focusing effects of the dipoles or for space charge. Thus it is desirable to have either two quadrupoles or a quadrupole and a solenoid at each end in the non-dispersive regions outside the bend. (Note: because of the inherent spherical aberration of magnetic solenoid lenses, if a solenoid is used, it should be very weak.)

2.3 180° Achromat

For the simplest design, one wants two 90° dipole magnets. But in a 90° bend, focusing is a major issue. (A parallel beam will be focused to a point after passing through 90° in a uniform field.) The natural focusing of a 90° bend must be reduced somewhat, either by using edge angles on the poles or by introducing an index in the magnet. We have decided to use 15° edge angles on the poles (fig. 1). For a 6' separation in the beams in and out of the achromat, and a 24" radius of curvature in the magnets, this gives nearly enough focusing to focus the beam both vertically and horizontally at the center of the dispersion-suppressing quadrupole. A slight amount of additional focusing is provided by weak quadrupoles and weak solenoids just outside the bend regions (fig. 2).

2.4 90° Achromat

For the 90° achromat, one wants two 45° dipole magnets. It is probably easiest to design them as sector magnets, with ends normal to the beam, similar to those used by Ramian. This gives very little focusing in y, and significant focusing in x. Quadrupoles just outside the bend region give focusing in y (and defocusing in x), and additional quadrupoles or weak solenoids provide the extra degree of freedom necessary to bring both x and y to a focus at the center of the dispersion-suppressing quadrupole. This bend has not yet been designed.

2.5 "7-11" Dogleg Achromat

The "7-11" dogleg is different, since it consists of two bends in opposite directions to make the beam emerge parallel to entry. This dictates a different symmetry, where the dispersion function changes sign and goes through zero at the point midway between the two bends. This necessitates two dispersion-suppressing quadrupoles, preferably operated on a common power supply (fig. 3).

It is perhaps simplest to place these two dispersion-suppressing quadrupoles 1/4 and 3/4 of the way between the two dipoles, as this minimizes the quadrupole strengths and results in the most symmetric trajectories. It is also possible to increase the quadrupole strengths and to move them closer to the center; the larger dispersion which results may aid in energy measurement.

In one location, there is very little space between the 7-11 dogleg and the 90° achromat. Because of this, it is advisable to "superpose" the two elements outside the bends in the two achromats.

3. Component Design

The magnets used in these achromat designs are all air cooled. The poles and return yokes are solid steel (preferably 10-06 or 10-08) rather than laminated.

3.1 Dipoles

As mentioned above, the 90° dipoles should be designed with focusing. We chose to do this with edge angles of 15°. The large gap of these magnets (6.5") means that fringe field effects are quite important. Field clamps are employed to control the field fall-off. The effective edge of the poles is about 0.5 to 0.6 of the way from the physical pole edge to the field clamp. With this taken into account, the magnet is designed to have a bend radius of 24". The ends of the magnet have removable steel pieces which may be re-machined to give a sextupole component, if it is desired to try to eliminate some of the second order aberration terms.

The fringe field integral which determines apparent beam offset (Enge's I_2)[3] is assumed to be about 0.15. (For a design where the width of a pole is much larger than the gap, an integral of 0.3 to 0.5 is typical, but here the aspect ratio is much different.) This produces an offset of trajectory in the magnet of about 0.25" toward the inside of the bend. It would be wise to measure the field on the median plane of the magnet to refine these assumptions. (Measurements every 1/2" or so along the beam's initial entry direction with a hall probe using rulers and sticks for alignment are sufficient to determine these effects. It would also be wise to measure field across the width of the magnet at its center to verify transverse field flatness.)

---

[3]Harald A. Enge, "Deflecting Magnets," in *Focusing of Charged Particles,* vol. 2, ed. Albert L. Septier, Ch. 4.2 (New York: Academic Press, 1967).

The field needs to be about 300 G for a 5 MeV electron beam, which requires about 2000 Ampere-turns per coil, or about 17 A for a 119 turn coil.

To get the flattest field across the aperture, field shim strips are added on the edges. These are 0.75" wide by 0.400" high where horizontal clearance is necessary for the vacuum chamber, and are 1.375" wide by 0.25" high on the open side of the magnet where vertical clearance is necessary for a 6" diameter beam pipe for the antiprotons.

3.2 Quadrupoles

There are two quadrupole designs for the achromats. The dispersion-suppressing quadrupoles which are situated between the dipole pairs are short (about 6" long) with steel poles. The pole tips have a circular cross section, with a diameter chosen to eliminate 12-pole contributions from the body of the quadrupoles. This ratio is:[4]

$$r_p = 1.15 r_a \qquad 1)$$

where r_p is the pole tip radius, and r_a is the aperture radius. This is a good value provided the pole tip subtends at least 90° of a circular arc.

Because of their short length, the quadrupole ends will contribute harmonic errors. The ends should be beveled to cancel their 12-pole contributions; this should require a bevel similar to that used in any other well-designed quadrupole at Fermilab. (I recommend examining some of the p-bar quadrupoles, and scaling the bevel based on the aperture. I would take a magnetic measurement with a rotating coil, cut the poles about half-way to the estimated bevel, take another measurement, and iteratively reduce the 12-pole contributions in this way.)

The pole tips should be at 300 to 400 G for the 180° achromat, and less for the "7-11" dogleg. They are excited with about 1000 Ampere-turns (actually 1300 Ampere-turns for 400 G), or 4.5 Amps with 225 turns of #12 square conductor.

The weak quadrupoles are a cos-2θ design. The pole tip fields desired are so weak (less than 50 G) that remnant fields in the iron of a traditional design would have been problematic. Thus it was decided to remove the steel poles and to use windings alone, with the conductors lying on a circular cross section with a cos-2θ density distribution. The quadrupole is shielded by a steel tube on the outside, which doubles as part of the winding

[4]A.P. Banford, *The Transport of Charged Particle Beams* (London: Spon, 1966).

fixture. The wire ends curve back over the outside of the steel to keep their fields from interfering with the beam. For a 12" long, 6.5" diameter quadrupole made of 48 conductors, the effective pole tip field is about 20 G for 12 A of excitation.[5]

3.3 Solenoids

A number of weak solenoids (with focal length of 100 m or so) will be needed for the original scheme of electron cooling. The solenoid strengths for the achromatic bends have been kept low enough that the same solenoids can be used here. This was done both for commonality of components, and to keep solenoid strengths as low as possible to avoid problems from their inherent third-order aberrations. The present design is iron-augmented with about 300 turns and a 6.5" diameter aperture.

4. Status

At the present time, the 180° achromat and the "7-11" dogleg have been laid out. The 90° achromat has not been laid out yet.

Detailed mechanical designs are complete for the 90° bend dipoles and the cos-2θ quadrupoles. The designs for the strong quadrupoles and solenoids are nearly complete. The dipoles for the 90° achromat and the "7-11" dogleg achromat have not yet been designed.

Bibliography

Banford, A.P. *The Transport of Charged Particle Beams.* London: Spon, 1966.

Brown, Bruce C. "Issues for Pulsed Magnet Design." Fermilab Doc. GT019, January 17, 1996.

Brown, Karl L. and Roger V. Servranckx. "First and Second Order Charged Particle Optics." SLAC-PUB-3381.

Enge, Harald A. "Deflecting Magnets." In *Focusing of Charged Particles,* vol. 2, ed. Albert L. Septier, Ch. 4.2. New York: Academic Press, 1967.

Livingood, John J. *The Optics of Dipole Magnets.* New York: Academic Press, 1969.

---

[5]see B.C. Brown, "Issues for Pulsed Magnet Design," for formulas.

Wollnik, Hermann. *Optics of Charged Particles.* New York: Academic Press, 1987.

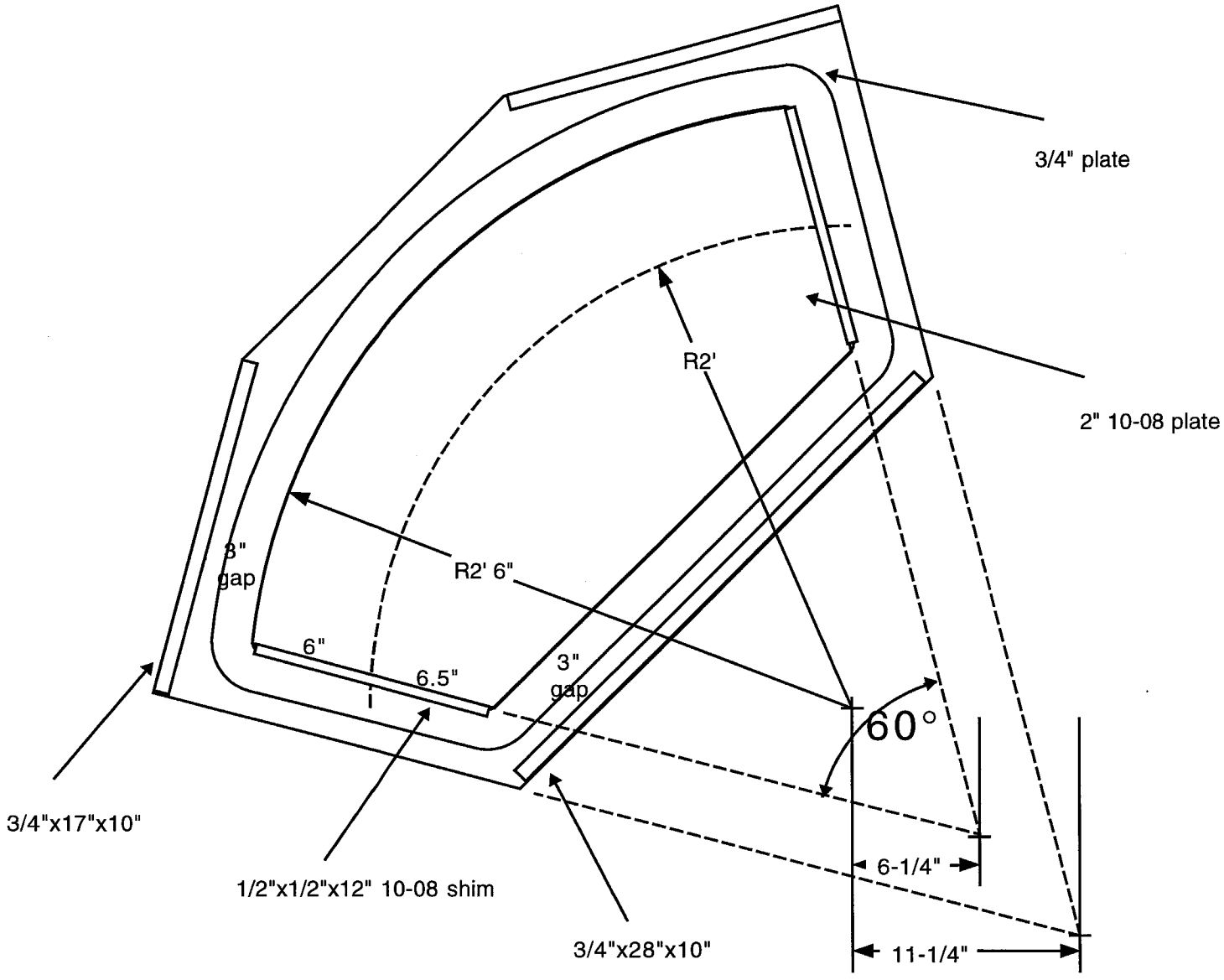

Fig. 1 Conceptual design of 90° bend dipole.

180° Achromat

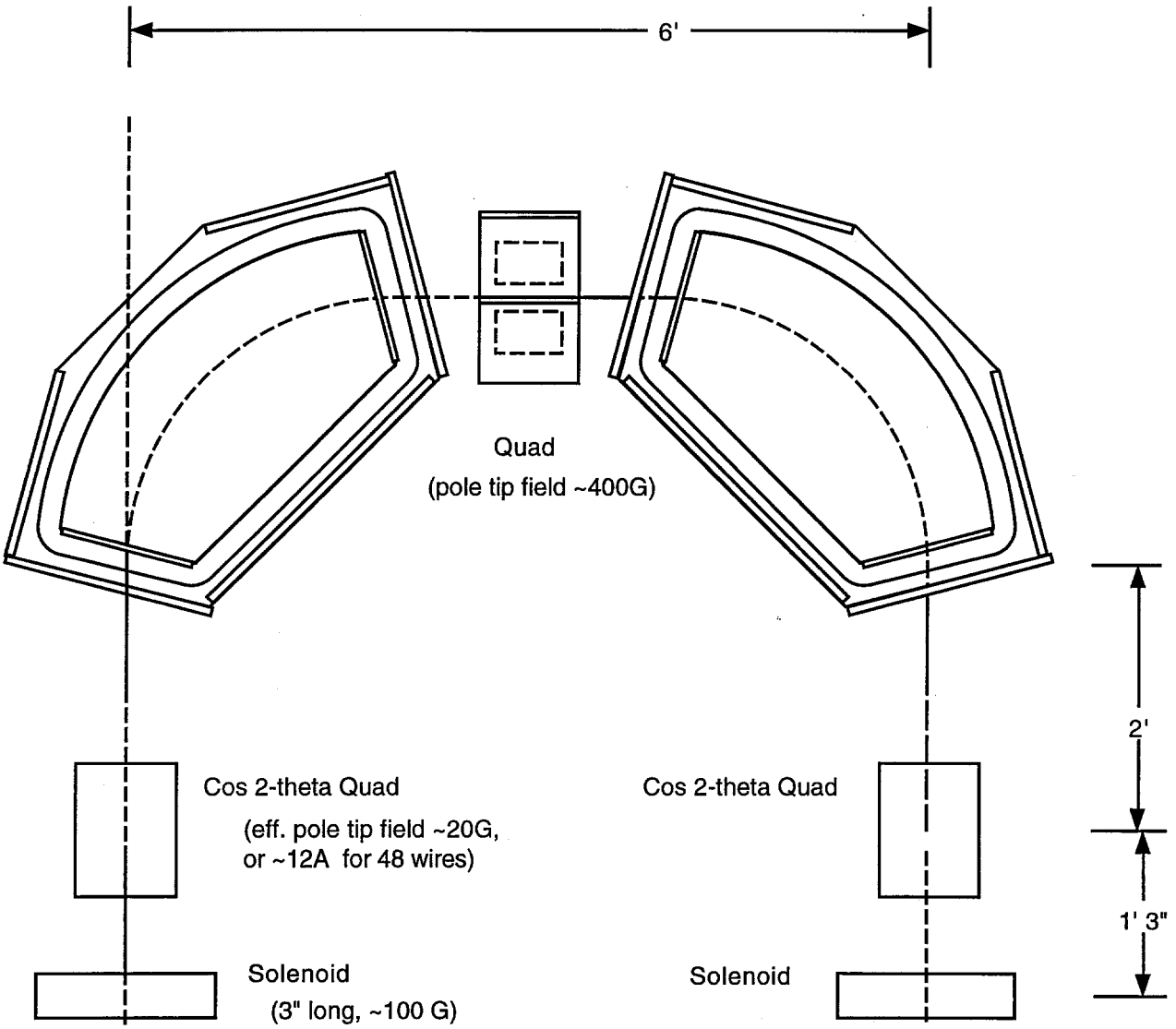

Fig. 2. Conceptual design of 180° achromatic bend.

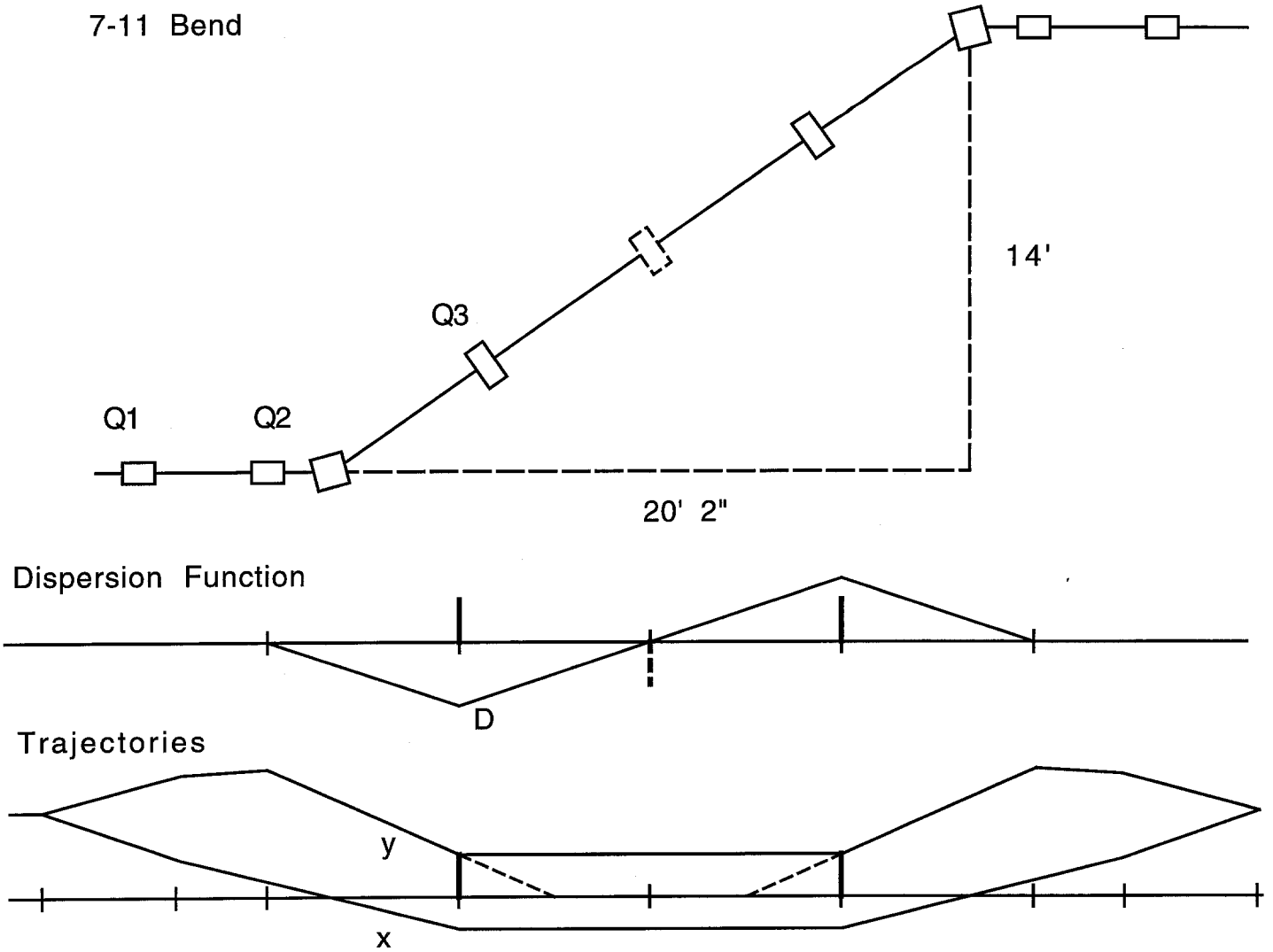

Q1: cos 2theta quad, 3.5"R, 12"L, 19G, 48 wire, 12A
Q2: cos 2theta quad, 3.5"R, 12"L, 7.5G, 48 wire, 5A
Q3: solid steel pole quad, 3.5"R, 6"L, 100G

Fig. 3. Conceptual design of "7-11" dogleg achromatic bend.

K.J. Bertsche
5-23-96