# Synclite and AGI Schematic

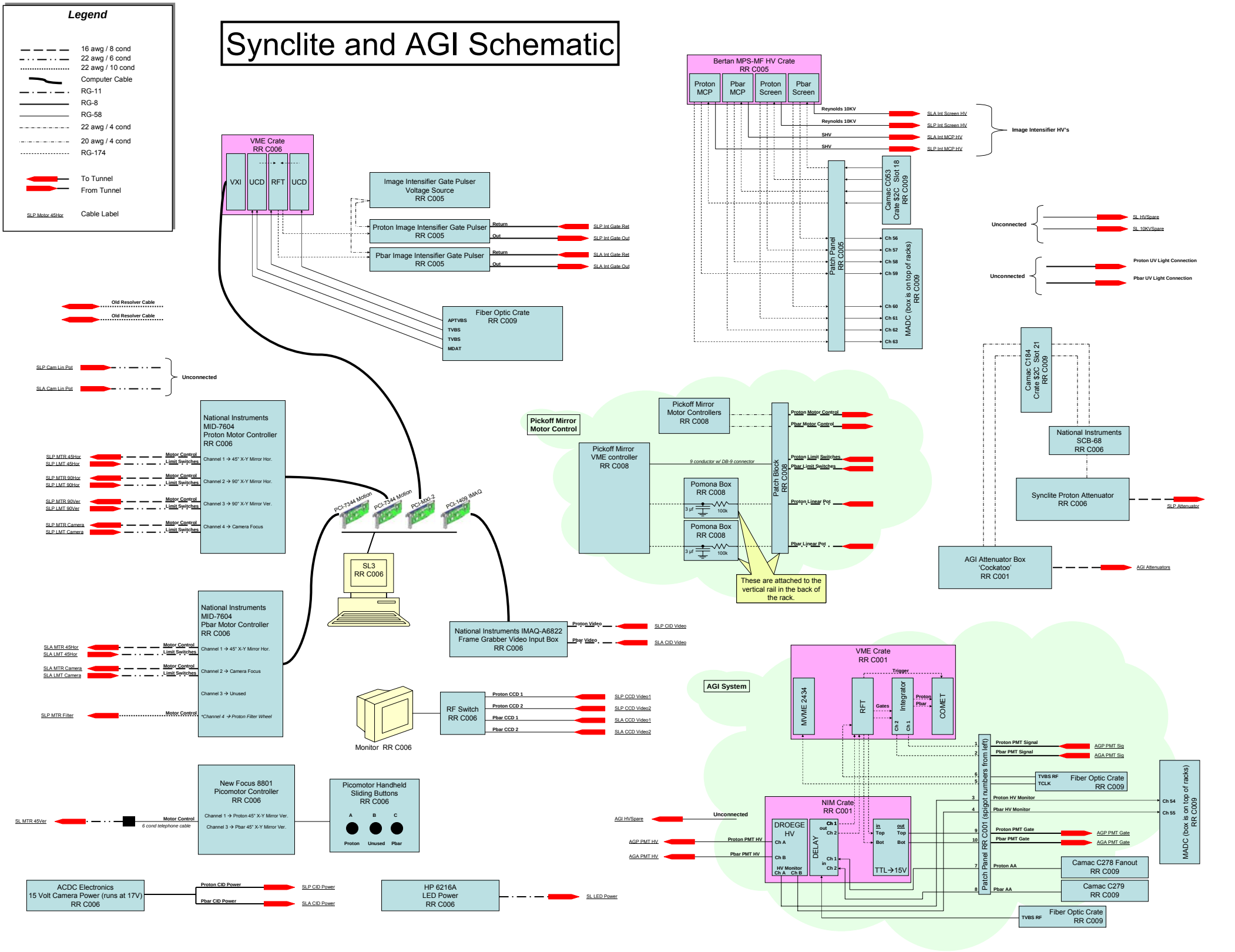

# Synclite

## RR C005

- [redacted]
- Patch Panel
- Bertan HV Supply
- Sorensen Gate Voltage Supply
- Pbar Intensifier Gate Pulser
- Proton Intensifier Gate Pulser
- Shelf
- [redacted]
- [redacted]

## RR C006

- Monitor
- Motor Controller
- Motor Controller
- LED Power
- Picomotor
- Computer Monitor
- Synclite Shutter (attenuator)
- Shelf
- VME Crate
- Computer

## RR C006 Back

- Monitor
- Motor Controller
- Motor Controller
- Picomotor
- LED Power
- Computer Monitor
- Camera Power
- Framegrabber Video Box
- Synclite Shutter (attenuator)
- NI SCB-68
- Computer
- VME Crate

# AGI

## RR C001

- Oscilliscope (sometimes)
- Old Apple Laptop
- VME Crate
- Patch Panel
- NIM Crate
- AGI Attenuator (cockatoo box)

# *C0 Service Building*

# *Tunnel – C11*

**Pickoff mirror connector panel on upstream end of Synclite proton box**

| Proton Pick Off Motor | Proton Pick Off Lin Pot | Proton Pick Off Limits | Pbar Pick Off Motor | Pbar Pick Off Lin Pot | Pbar Pick Off Limits |
|---|---|---|---|---|---|
| ○ | ○ | ○ | ○ | ○ | ○ |

***Connector Legend***

- BNC
- SHV
- Reynolds 10kV
- Burndy

**CID Camera Controller**
- SLP CID Power
- SLP CID Video

**Proton Abort Gap PMT** (This is attached to the back of the proton Synclite box)
- AGP PMT Gate
- AGP PMT Sig
- AGP PMT HV

**CID Camera Controller**
- SLA CID Power
- SLA CID Video

**Connectors looking at end of proton box**

**Connectors looking at end of proton box**

| | | | | |
|---|---|---|---|---|
| **Proton UV Light Connection** | | | SLP LMT Camera | SLP MTR Filter |
| SLP Int MCP HV | SLP Int Screen HV | SLP Int Gate Out | SLP Int Gate Ret | |
| SLP LMT 90Ver | SLP MTR 45Hor | SLP MTR 90Ver | SLP MTR Camera | **Unused** |
| SLP LMT 90Hor | SLP LMT 45Hor | SLP Cam Lin Pot | SLP MTR 90Hor | **Unused** |

**CCD Power Brick**

SLP CCD Video1
SLP CCD Video2
SLP Attenuator

Hole in the corner of box

**Connectors looking at end of Pbar box**

| | | | |
|---|---|---|---|
| | AGA PMT Gate | AGA PMT HV | |
| **Pbar UV Light Connection** | | | SLA Int Screen HV |
| | AGA PMT Sig | SLA Cam Lin Pot | |
| | | | SLA Int MCP HV |
| | **Unused** | SLA LMT 45Hor | |
| | | | SLA Int Gate Out |
| SLA LMT Camera | SLA MTR Camera | SLA MTR 45Hor | |
| | | | SLA Int Gate Ret |
| AGI Attenuators | SLA CCD Video2 | SLA CCD Video1 | |

**CCD Power Brick**

Hole in the corner of box

SL MTR 45Ver

SL LED Power

Some of these connections come back out and go to the proton abort gap PMT attenuator.
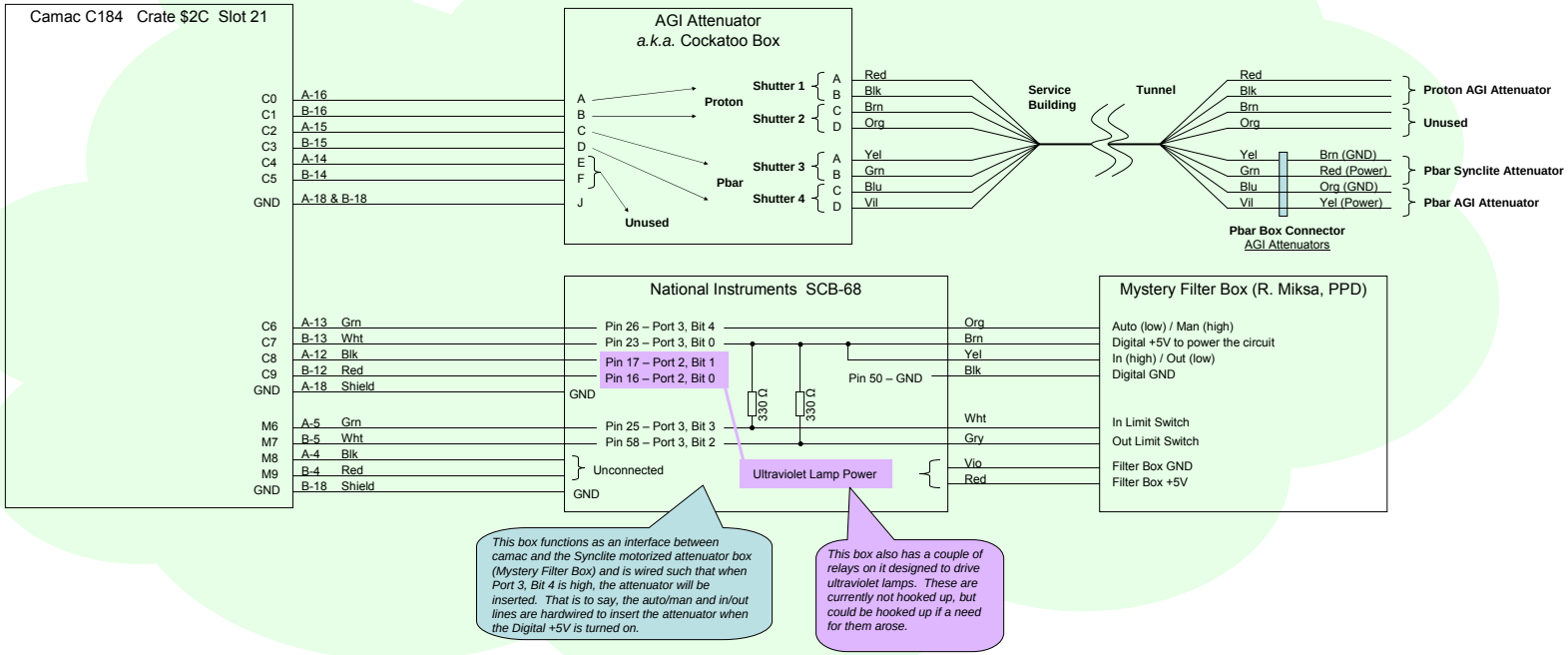
# Optical Attenuator Cabling