9. ACCELERATION SYSTEM

9.1 Requirements

The first requirement on the system is that it be capable of accelerating a beam of 2.5×10^{13} protons at a rate of 75 GeV/s. It must also provide enough bucket area to contain this beam. Measurements at 400 GeV and 2.5×10^{13} find a longitudinal emittance of approximately 0.3 eV-s, four times that measured at 8 GeV. We will make the conservative assumption that the beam emittance at 150 GeV, the injection energy, will have this larger value, 0.3 eV-s.

The rf voltage and power requirements for proton acceleration of two possible beam intensities are summarized in Table 9-I.

Table 9-I. RF Requirements for Protons.

Beam intensity	2.5×10^{13}	10^{14}	ppp
Average beam current	0.191	0.765	A
Beam power	0.3	1.2	MW
Ramp slope	75	75	GeV/s
Synchronous voltage	1.58	1.58	MV/turn
Bucket area (150 GeV@75 GeV/s)	0.9	0.9	eV-s
Synchronous phase	47	47	deg
Peak rf voltage	2.16	2.16	MV/turn
No. cavities	6	6	
Peak cavity voltage	360	360	kV
Total cavity dissipation/station	64	64	kW
Total power per station	126	290	kW
(Beam/total power)/station	0.4	0.7	

There are also special requirements arising from antiproton acceleration. When the ring is to be used only for unilateral acceleration of protons in either direction, the location and spacing of rf cavities is not dictated by any consideration other than available space. For simultaneous

bilateral acceleration and subsequent storage of protons and antiprotons, however, some restrictions must be imposed upon cavity spacing. By appropriate spacing and phasing of the rf fields in individual cavities, some aspects of bilateral operation can be optimized. The requirements for $\bar{p}p$ operation are:

(i) The rf system must create sufficient bucket area for simultaneous bilateral acceleration and storage of protons and antiprotons. Because the total number and longitudinal emittance of protons and antiprotons will almost certainly be quite different, the required bucket areas will not necessarily be the same.

(ii) The rf system should provide the capability for moving the bunch collision point azimuthally over some reasonable range (of order 20 m).

(iii) The system may be required to allow for independent control of the phase and amplitude (bucket location and size) of the proton and antiproton buckets.

If requirement (iii) is satisfied, then (ii) is automatically, but it is possible that (ii) may be satisfied in a system that does not meet (iii).

9.2 Cavity Spacing

It is necessary to consider cavity spacing in order to satisfy the requirements listed above for bilateral acceleration. The basic unit is two adjacent cavities placed such that their effective gaps are $3\lambda/4$ apart, where λ is the rf wavelength. A particle moving downstream arrives at the second gap at a time phase $3\pi/2$ radians later than its arrival at the upstream gap.

If the downstream-cavity gap voltage leads the upstream voltage by $\pi/2$, a particle moving downstream will see the gap voltages exactly in phase (modulo 2π), and consequently the two cavities provide maximum voltage and bucket area for such a particle. But a particle moving upstream will see the gap voltages exactly out of phase and, if the gap voltages are equal, will see no net voltage. An additional similarly spaced doublet, with opposite relative phasing, can be placed arbitrarily close to the first pair. There is good reason to space the gaps of the nearest neighbors of adjacent doublets $\lambda/2$ so a pair of doublets (four cavities) will occupy a space of approximately 2.5λ. All three requirements above can be satisfied through the use of such doublets. Upstream and downstream doublets can be driven from separate rf sources and operated at different amplitudes and phases.

As an example, Fig. 9-1 shows three doublets, the two outside doublets providing proton bucket area while the center doublet provides antiproton bucket area. A simple fanout system is shown to demonstrate that the required phasing can be accomplished using easily available components, quadrature hybrid junctions and π radian splitters. In the array shown, with all gap voltages equal, the proton bucket area will be larger than the antiproton area by a factor 1.414 during beam storage. During acceleration, the bucket-area difference will be slightly larger because the antiprotons will require a larger synchronous phase angle because less voltage is available and consequently the moving-bucket factor reduction will be larger.

The cavity spacing described is essentially a series of cavities (1, 4, and 5) with their gaps spaced an integral number of half-wavelengths apart and another group (2, 3, and 6) with the same relative spacing but all

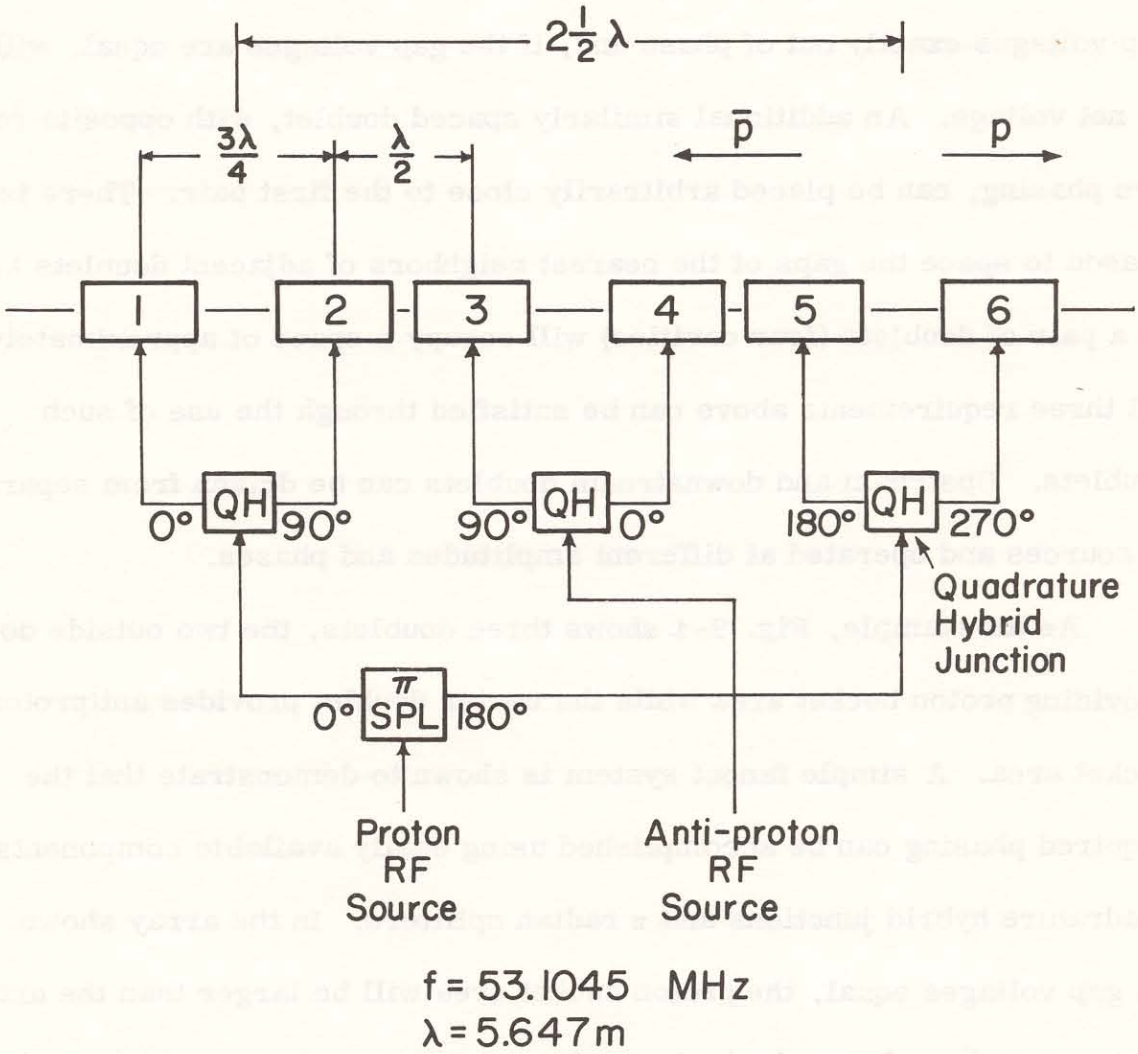

Fig. 9-1. RF cavity spacing and phasing for orthogonal $p\bar{p}$ control.

displaced by $\lambda/4$. Such an array of cavities can be phased in a slightly different manner to provide a greater total bilateral bucket area if requirement (iii) is relinquished. Such a phasing scheme is shown in Fig. 9-2. The proton and antiproton bucket areas are equal and each effective voltage is 0.707 V_{tot}.

With the phasing shown in Fig. 9-2, the intersection point is $\lambda/8$ to the left of the midpoint of the array. If the voltages of cavities 2, 3, and 6 are reduced to zero, the intersection point will move to the midpoint of the array, with a slight reduction in bucket area, and if cavities 2, 3, and 6 are raised to maximum voltage with opposite phase, the intersection point will move to a point $\lambda/8$ to the right of the midpoint.

It is possible that the phasing of Fig. 9-2 could be used during acceleration and the phasing switched to the phasing of Fig. 9-1 to provide orthogonal control after storage energy is reached. Because of the quite different geometry of the two fan-out systems, this phase switching would be difficult and would require great care to avoid phase-space dilution or loss of particles.

9.3 System Design

A frequency of 53 MHz, the same as the Main Ring, is chosen in order to:

(i) give high-efficiency transfer of beam from the Main Ring by means of a synchronous bucket-to-bucket scheme;

(ii) minimize the rf voltage;

(iii) take advantage of an existing 160-kW power amplifier at this frequency;

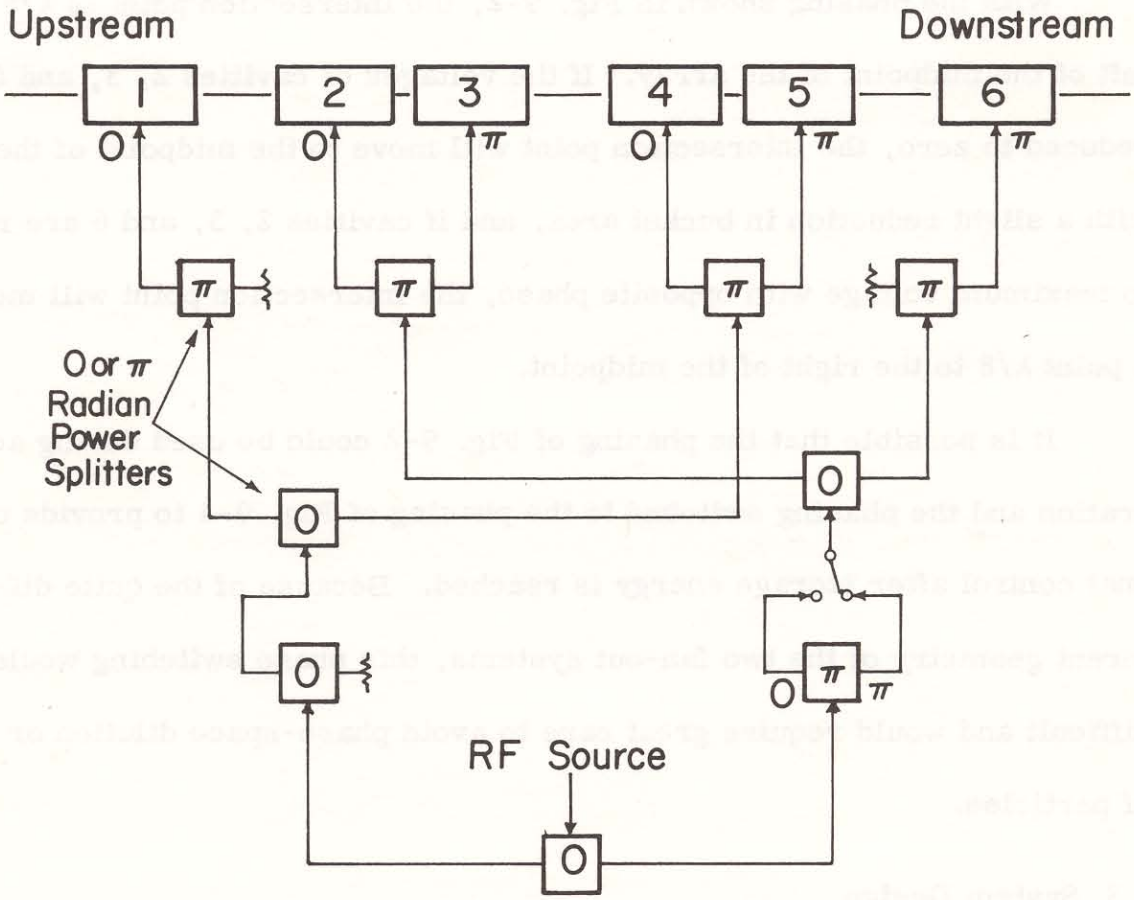

Fig. 9-2. RF cavity spacing and phasing without orthogonal $\bar{p}p$ control.

(iv) have the Main Ring and superconducting ring beams collide in the simplest possible way.

In order to utilize existing facilities and to utilize straight-section space efficiently, it is highly desirable to locate the system in straight-section F. A layout of the six cavities in the straight section is shown in Fig. 9-3. Recent development work has upgraded the voltage and power levels of Main-Ring rf stations. If additional space is needed for the new system, some Main-Ring cavities can be removed without injury to present performance.

The rf power amplifiers will be located in a new ground-level equipment building (65 ft × 28 ft) located directly above the F0 straight section. RF power will be delivered to the cavities by a $3\lambda/2$ long 9-in. coaxial transmission line connecting the equipment room and tunnel. Locating the power amplifiers upstairs has several advantages: less space is required in the tunnel, all the active electronics is directly accessible for repair, and radiation exposure to personnel is reduced. Radiation leakage through the transmission-line penetration should be small.

9.4 RF Station Components

A cross section of an rf station is shown in Fig. 9-4. The components are described below.

9.4.1 Power amplifier. The 160-kW modified Main-Ring power amplifier (PA) is capable of powering a superconducting-ring cavity at levels appropriate for intensities of 2.5×10^{13} ppp (see Table 9-I, column 1) with sufficient power to compensate satisfactorily for beam loading. Above

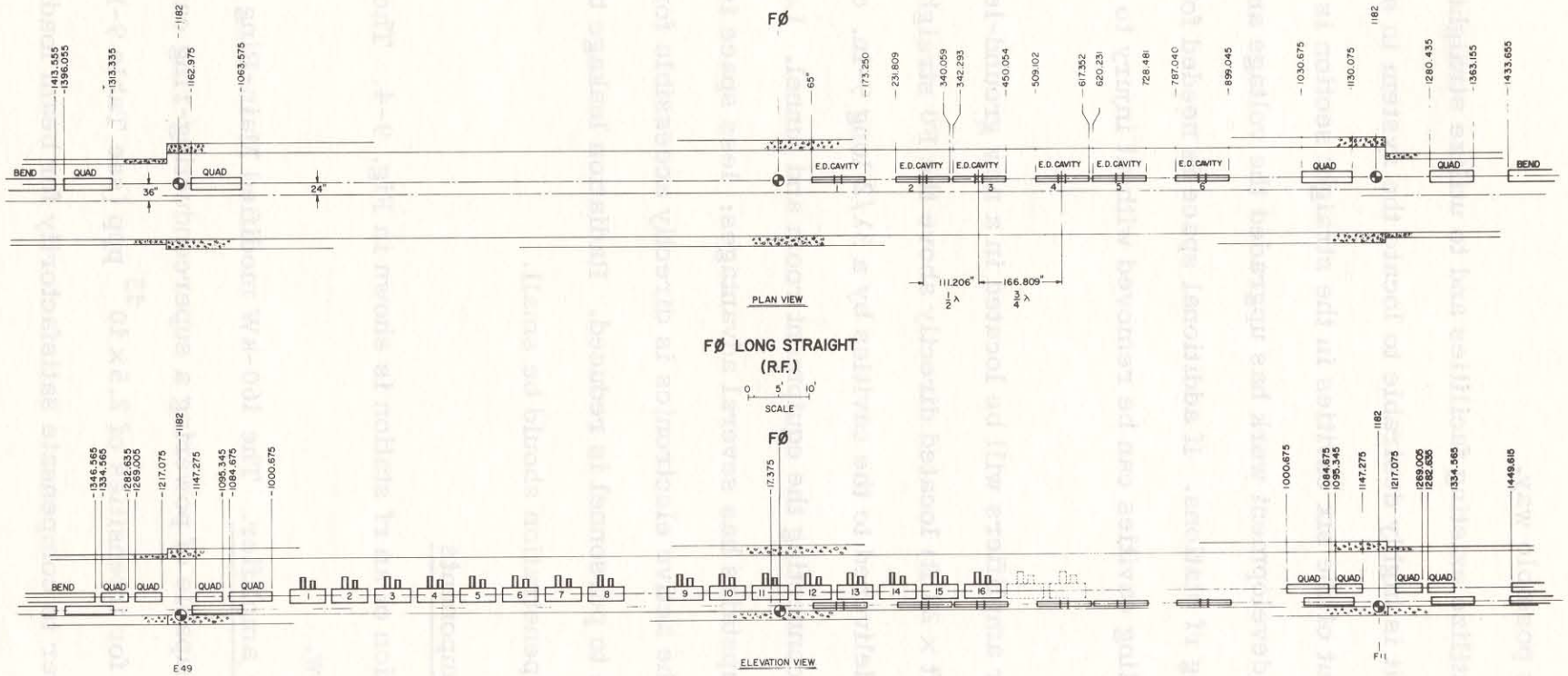

Fig. 9-3. Layout of F0 long straight section.

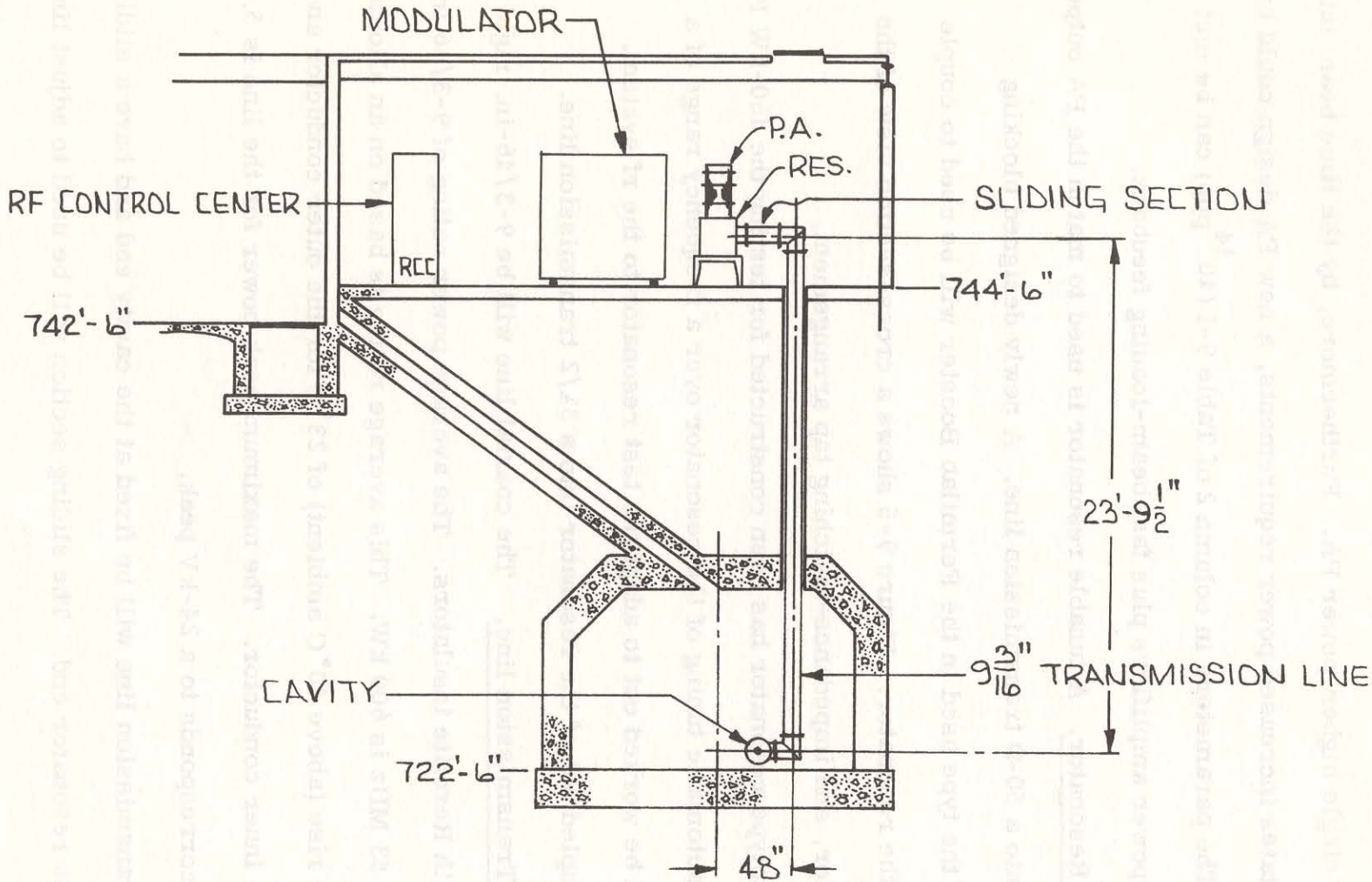

Fig. 9-4. RF station cross section.

intensities of 2.5×10^{13} ppp, it will be necessary to consider additional rf power for both real and reactive beam loading, for example, two PA's per system or a single higher-power PA. Furthermore, by the time beam intensity necessitates increased power requirements, a new PA design could be available. The parameters in column 2 of Table 9-I (10^{14} ppp) can be met with higher-power amplifiers plus fast beam-loading feedback.

9.4.2 Resonator. A tunable resonator is used to match the PA output impedance into a 50-Ω transmission line. A newly designed blocking capacitor of the type used in the Fermilab Booster will be used to couple the PA into the resonator. Figure 9-5 shows a cross-section view of the PA, resonator, and impedance-matching tap arrangement.

A prototype resonator has been constructed for testing the 160-kW PA. A means of automatic tuning of the resonator over a frequency range of a few kHz will be worked out to adapt the test resonator to the rf system. Power is coupled out of the resonator into a $3\lambda/2$ transmission line.

9.4.3 Transmission line. The coaxial line will be 9-3/16-in. rigid 50-Ω line with Rexolite insulators. The average power rating of 9-3/16 in. rigid line at 53 MHz is 600 kW. This average rating is based on an allowable temperature rise (above 40° C ambient) of 23° C for the outer conductor and 62° C for the inner conductor. The maximum peak power for the line is 5.8 MW, which corresponds to a 24-kV peak.

The transmission line will be fixed at the cavity end and have a sliding section at the resonator end. The sliding section will be used to adjust line length.

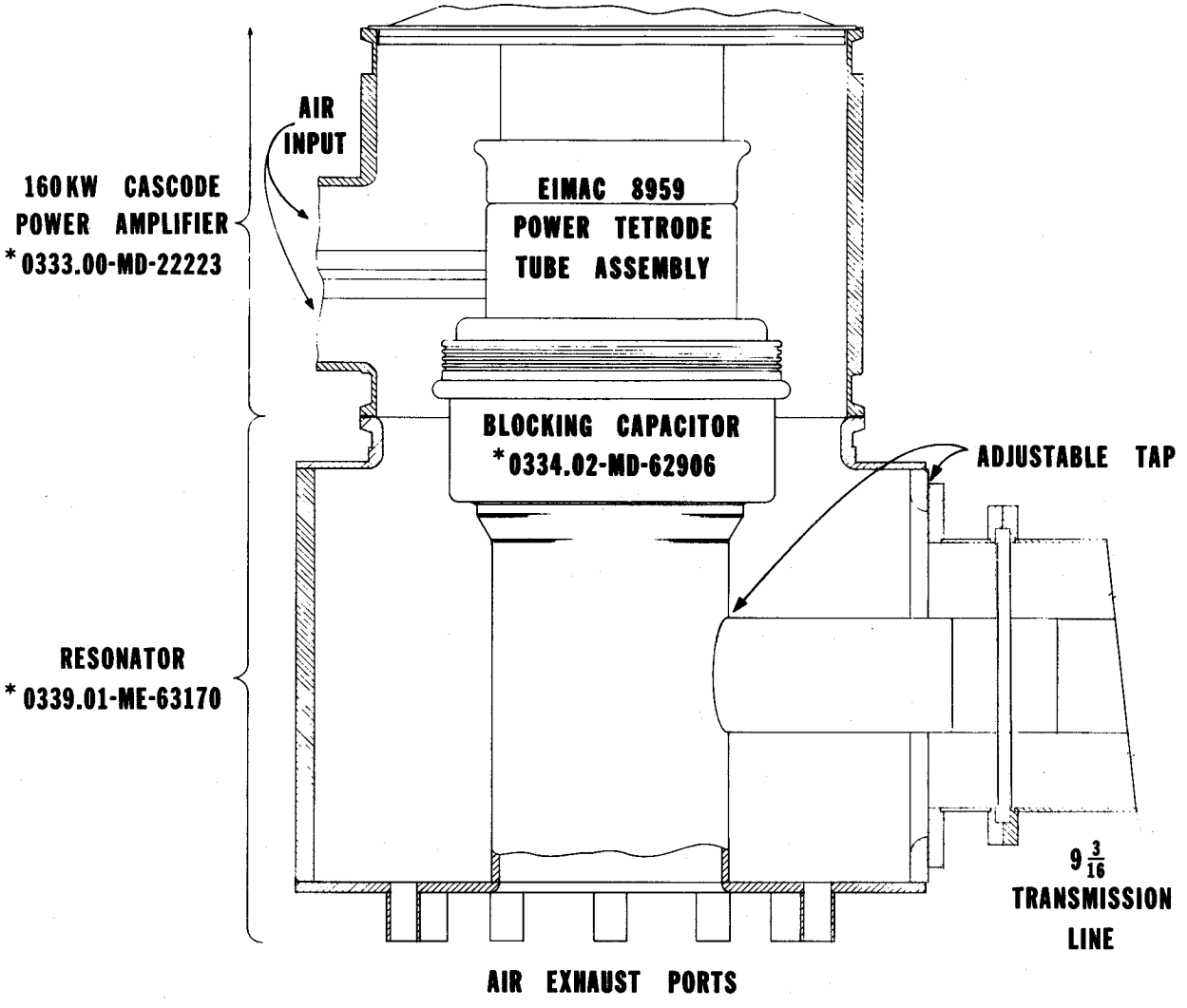

* REFERS TO FNAL DRAWING NUMBER

Fig. 9-5. RF power amplifier and resonator.

9.4.4 Modulators. Statements about the modulator suitability require some knowledge of the exact rf program intended. The Main-Ring modulators are presently being modified to operate at 30-kV output for operation with the modified cavities. They are capable of a regulated output current of 10 A as presently designed.

At 2.5×10^{13} intensity, the required PA power is 126 kW, with 57% efficiency. The power required from the modulator at (28 kV dc) is therefore 221 kW. The modulator current is 7.75 A, which, with a 5-kV series-tube drop, results in a modulator series-tube power dissipation of 38.8 kW. When power is being delivered to the beam, the rf voltage will remain high, so we will keep the series tube voltage drop near 5 kV. Present modulators are a good match to the 160-kW PA at 2.5×10^{13} ppp. During flattop, there is no real beam power, but there are reactive beam load and cavity power to be considered. Maximum dissipation occurs when the modulator output is approximately 16.5 kV. By careful programming of the voltage drop across the series tube, we can use the 15 A capability of the series tube.

Main-Ring rf modulators will be used initially as designed and later with modifications to deliver 15 A as beam intensity increases. To achieve 1×10^{14} ppp, a new modulator design will be required. One modulator will then be used to supply plate voltage to a higher-power PA.

9.4.5 Anode power supplies. Presently two anode power supplies across the road from the F0 RF Building supply dc voltage for Main-Ring modulators. These power supplies are each rated for 33 kV at 48 A average dc load. A series 20-Ω resistor is installed in the dc output of the supply to prevent overstressing the power transformer during crowbar operation.

If we run rf stations with two modulators on each anode supply, the resulting 30-A load current is well below the average rating of the supply. This assumes that we accelerate in the Main Ring only during the fall of the superconducting field. For a cycle requiring acceleration in the Main Ring during superconducting acceleration or flattop, as will be required for any colliding-beam mode, additional anode power-supply capability will be necessary for intensities greater than 2.5×10^{13}.

9.5 Cavity Design and Operation

9.5.1 Electrical design parameters. The cavity, shown in Fig. 9-6, is a coaxial resonator, 12 in. in diameter and 108-1/4 in. long, formed of copper 102 with ceramic rf windows. The characteristic impedance Z_o is approximately 70 Ω over most of its length, purposely lowered in the center section, and modified at each end by corona rings. Because the required frequency range Δf is a maximum of 2.271 kHz, the cavity is designed as a fixed-tuned two-gap structure of length $\ell \approx \beta\lambda/2$. The drift tube is actually 160° long electrically rather than 180°, so that $V_{effective} = V_{gap} \sin(160°/2) = 0.985\ V_{gap}$ is slightly less than the maximum achievable. The cavities' resultant mechanical length permits mounting them end-to-end at 180° electrical spacing if desirable.

The 160° drift tube is supported by ceramic rf windows and is capped by corona rings dimensioned to minimize the corona-ring gradient. At 200-kV peak gap voltage, the rf gradient is approximately 70 kV/cm. The corona-ring capacitance somewhat increases the skin loss. This design results in the parameters in Table 9-II.

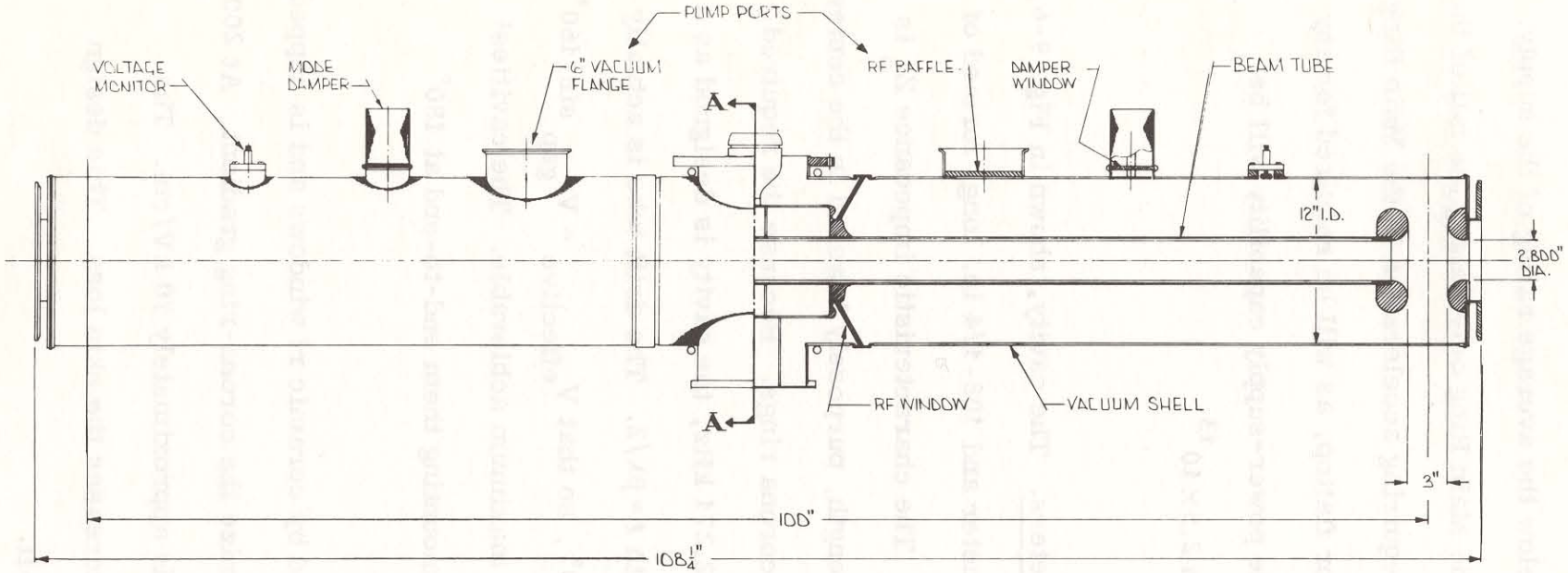

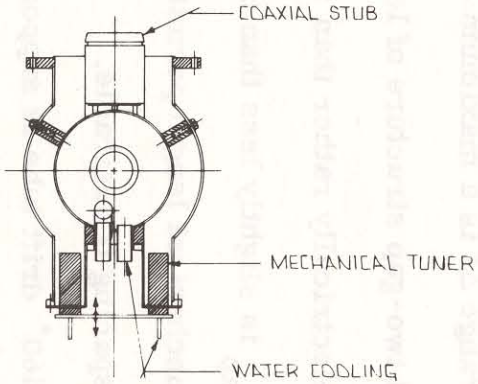

SECTION A-A

FOR FURTHER DETAIL SEE FNAL DRAWINGS

BEAM TUBE ASSEMBLY 1734.02-ME-63224

VACUUM SHELL ASSEMBLY.... 1734.02-ME-63225

CENTER SECTION..... 1734.02-ME-63252

Fig. 9-6. RF cavity.

Table 9-II. RF Cavity Parameters.

Parameter	Unloaded Cavity	Cavity w/Beam Load (2.5×10^{13} ppp)	
Peak voltage	360	360	kV
Frequency	53	53	MHz
Z_o	70	70	Ω
Q	6,500	3,650	
Shunt impedance	1	0.56	MΩ
Time constant	39	22	μs
RF power required	64	114	kW
0.707 bandwidth	8	14	kHz
Stored energy	1.2	1.2	J

RF power is applied near the center of the cavity at a point tapped down on the drift tube where the 50-Ω drive line is impedance-matched at full load. At less than full load, the $3\lambda/2$ line will operate at the same rf voltage at the voltage maxima as with full load, but instead of operating as a flat line, will contain voltage minima. This scheme was chosen to minimize the possibility of line sparking. There will be spark-protection circuitry that interrupts rf drive and anode supply voltage for either cavity, coax line, or PA sparking.

It is expected that the cooling and spark protection will allow operation at 360-kV peak accelerating voltage per cavity (180-kV peak per gap).

Damping of obnoxious modes will be accomplished by resistors coupled through the side walls of the resonator, comparable to what has been successfully done on the present Main-Ring cavities.[1] At 1×10^{14} ppp, we will need the "stuntbox," which sends an antipulse through the PA to arrive at the cavity synchronously with the beam-loading perturbation.[2] This feed-forward technique is available to us in principle at any time, but we will have to construct additional low-level hardware for its implementation.

9.5.2 Mechanical design. The mechanical design is sketched in Fig. 9-6. The drift tube is cooled by internally circulating water; this cooling is necessary to minimize thermal detuning. The outer copper tank is also water-cooled and temperature-stabilized.

The rf windows are 99% Al_2O_3 ceramic cones, metallized and brazed to OFHC copper rings that are in turn heliarc-welded to the copper inner and outer coaxial conductors. Thus, the entire cavity structure is vacuum-tight with no organic vacuum seals and is completely bakeable to 250°C if needed in order to lower initial outgassing rates.

9.6 Bunch Reconfiguration in the Main Ring

For antiproton-proton colliding beams, it is necessary to rebunch the beam in the Main Ring to approximately 12 bunches, in order to concentrate more protons per bunch to increase luminosity.

The plan is to debunch the beam from the usual harmonic h = 1113 by reducing the rf voltage adiabatically, then turning on a low-harmonic cavity to relocate bunches in phase space. After one-fourth of a phase oscillation, the bunches will have roughly clustered in phase at the lower harmonic, with an increase in total energy spread. The bunches are then recaptured in h = 1113 buckets by turning on the ordinary rf system.

Recent storage studies in the Main Ring have indicated, at an intensity of 2×10^{13} protons in approximately 1066 of the 1113 buckets, some 90% of the beam is contained within bunches 3 ns long and appear to be matched to stationary buckets of 1.25 MV/turn. This corresponds to a bunch length $\Delta\phi$ of 0.5 radians and a bunch area of 0.19 eV-s per bucket.

If the rf voltage is reduced until the bucket area has shrunk to the bunch area, then turned off, dilution by a factor $\pi/2$ will occur, so that the debunched emittance will be 0.3 eV-s per bunch, corresponding to an energy spread of ±7.8 MeV or a phase-space density of 5.7×10^{10} protons/eV-s. In order to create bunches containing 10^{11} protons, a charge bunch occupying area 1.75 eV-s must be captured. To compensate for losses in extraction, injection, and acceleration, we take this area to be 2 eV-s.

The voltage to create a 150-GeV 2-eV-s bucket at h = 1113 is 226 kV, so that recapture will create no problems. The maximum energy spread corresponding to a 2-eV-s bucket is ±83 MeV, well within the observed useful momentum aperture at 150 GeV.

The low-harmonic cavity should keep the center of charge stationary with respect to h = 1113 buckets while rotating a set of bunches. Its harmonic number must therefore be a factor of 1113. Consider, for example, h = 21, corresponding to a frequency of 1.0019 MHz. This bucket covers the azimuthal region occupied by 53 bunches. Approximately 26 bunches can be rotated into a vertical strip 19 ns long using a voltage of 12.7 kV. The synchrotron period is 0.6 s, so rotation will require 150 ms.

If the same exercise is carried out at h = 53, f = 2.53 MHz, each bucket will encompass 21 of the original bunches. The required voltage is 32 kV, a little high. The problem of aligning the h = 1113 bunches vertically in this phase space also appears to be more difficult than at h = 21, because of synchrotron tune spread, so the h = 53 option looks less favorable.

The question of whether the Main-Ring beam can be debunched at 150 GeV without instability has been investigated in a recent storage study.

Main-Ring beam was debunched at 100 GeV in a manner close to that described above and was observed to have a beam-storage lifetime consistent with that observed for bunched beam. Attempts to measure the momentum spread of the debunched beam by Schottky-scan techniques were not successful, due possibly to insufficient detector sensitivity or magnet ripple. Further attempts to make such measurements are planned.

Actual study and verification of the parameters described above cannot be accomplished at present, because we do not have an rf cavity of sufficiently large voltage that can operate in the Main Ring below 5 MHz. Reconfiguration studies at frequencies that are not integral sub-harmonics of 1113 are nevertheless useful and should be pursued. To this end, a surplus low-frequency cavity from the PPA accelerator has been installed in the Main Ring and various bunch-reconfiguration experiments will be done in coming months to clarify the precise requirements.

The antiproton beam is expected to consist of 12 bunches of 2-ns width, each containing 10^{10} antiprotons with a bunch area of 0.08 eV-s. This will require a stationary bucket of 3.6 eV-s and a voltage of 120 kV/turn at 1000 GeV.

References

[1] Q. A. Kerns and H. W. Miller, IEEE Trans. Nucl. Sci. NS-24, 1704 (1977).

[2] Q. A. Kerns, Proton-Proton Colliding-Beam Storage Rings for the National Accelerator Laboratory, Design Study Section VI, 19 8.