Booster Beam Loss Monitor Data Acquisition and Presentation Specification

December 14, 2011

Craig Drennan

Table of Contents

I. Introduction 1

II. BLM Digitizer Module Data Acquisition 2

III. Summary of the BLM DAQ Process 3

IV. Signal Processing: Computing of Various Sums 4

IV.1 The Base 80 µs Integration Samples 5

IV.1.1 Ideal Scaling of Digitizer Values to Rads and Rads/Second 5

IV.2 The Full Cycle Sampled Accumulation (BLME Support) 6

IV.3 The 1 ms Integration Samples 7

IV.4 The 100 Second Moving Sums (BLMS Support) 8

IV.5 The 7.5 Hz Waveform Buffers (RETDAT Support) 9

V. BLM Digitizer Calibration 10

V.1 Scaling for the New Integrator 10

Appendix A: Scaling for the Log Integrator 17

I. Introduction

This note is to specify and document how the Booster Beam Loss Monitor data is collected and processed using the BLM Integrator/Digitizer VME modules. The following sections will describe how the BLM signals are digitized and the data processed into the different types of sums that are used to monitor and manage beam loss in the Booster.

There are several user applications that use different variations of the BLM Integrator data.

1. The base "80 µs Integration Samples" are 500 values read from each BLM channel, each Booster cycle. From these samples are used to derive all the other integration types.

2. The "Full Cycle Sampled Accumulations" is a 32-bit running sum of the 80 µs samples over a single Booster cycle.

3. The "7.5 Hz Waveform Buffers" manage the Full Cycle Sampled Accumulations for delivery of two cycles of time stamped BLM data every other 15 Hz cycle. This data is used by certain applications, such as B136 BLM Cycle Plot and other JAVA based ACNET applications.

4. The "1 ms Integrated Samples" are used for data logging for historical and Booster studies purposes.

5. The "100 Second Moving Sums" are used for control room bar graph displays and alarms.

You will see that there is an issue with the units of Rads/Second that has been "historically" attached to the Booster BLM data. The Log Integrators were originally used in the Tevatron where beam is in the accelerator for long periods of time. There, accelerator operators were concerned with the rate of beam loss energy impinging on the cryogenic super-conducting transport magnets. The Log Integrators were calibrated according to the number of coulombs/second (amps) in to volts out. Robert Schafer describes the Log Integrators in a note, "Comments on the Tevatron BLM System, 7/22/2003"

> With the 1/16 s leaky integration at the input, the output voltage was a rough indication of the probability of quenching a dipole magnet. Magnet quench threshold measurements made in the left bend of the extraction line to the Meson Area (by Roger Dixon?) showed that a superconducting dipole magnet could be quenched by roughly 0.5 mJ/gram (fast pulse), or 8 mJ/gram-s (slow loss) of radiation in the superconductor[3]. The ratio, 1/16 s, is the "time constant" of the superconducting cable.

For beam loss in the Booster we are more concerned about the total beam loss, or the amount of sudden beam loss at points around the accelerator, and at points in time during the

acceleration cycle. For the Booster, the more appropriate measurement is in Rads of loss, not the rate of beam loss in Rads/Second. However, when the BLM integrator modules from the Tevatron were incorporated into the Booster the units of Rads/Second came along with them. For 30 years the BLM measurements provided an essential number used in tuning the accelerator to reduce beam loss and improve efficiency of the machine. The actual units on the numbers were not of much concern.

You will see that the new BLM integrators measure charge, not so much a rate of charge. Also, other types of sums, currently in use and described below, are meant to represent an accumulation of loss in Rads, not an ever increasing rate of loss in Rads/Second. However, documentation for the front-end Local Applications states that the other sums were derived from numbers scaled to Rads/Second.

After much deliberation and examination of the variance in the existing system's actual calibration it was decided to abandon the scaling in Rads/Second and scale the BLM results in Rads. The loss monitor ion chambers have a consistent scaling of 70 nano-Coulombs of charge per Rad of energy impinging on it. Also the new linear integrators have a very well defined calibration.

II. BLM Digitizer Module Data Acquisition

Integration and digitization of the loss monitor signals are performed by the BLM Digitizer Module. The data representing the digitized signal is buffered on the BLM Digitizer Module using FIFO memory. The output of this memory is accessible by the crate processor via the VME bus.

The module performs the following functions.

1. Digitizes the results of an analog 20.0 µs BLM charge integration into a 16 Bit Word.
2. Every 80.0 µs an average of 4 each 20.0 µs integrations produce a 16 Bit Word that is written to a FIFO memory.

   Note that this is not strictly an 80.0 µs integrated value, but rather an 80.0 µs integrated value divided by 4.

3. 40.0 ms of data is collected at a rate of 12.5 kHz for each Booster cycle, resulting in 500 samples per cycle.
4. The number of BLM channels in a particular location around the Booster Gallery is 12. However in a couple locations, there are as many as 24.
5. A conservative estimate for transferring one 16 Bit Word over VME is 1.0 µs. This leads to a total time of 12 ms to transfer one cycle of data for 24 BLM channels, from the Digitizer modules to the MVME processor board.

(500 samples / channel)*(1 accesses / sample)*(24 channels)*(1.0 µs / access) = 12 ms

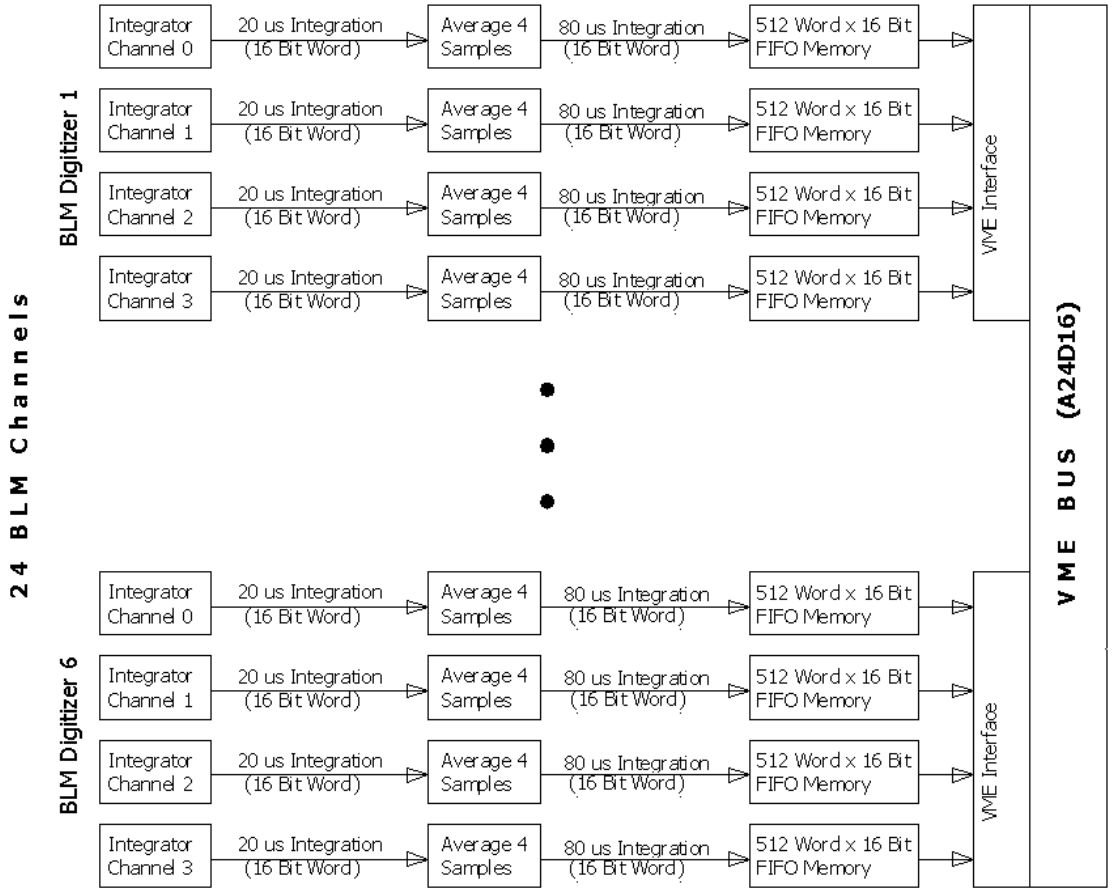

Figure II.1.1 Simplified block diagram of the BLM digitizer data processing

III. Summary of the BLM DAQ Process

The following is a sketch of the BLM data acquisition process. The computation of the various types of sums is explained in more detail in the following sections.

Steps in the Process:

1. Signal digitization and collection is triggered every 15 Hz cycle on event $10.
2. The BLM signals are digitized at a rate of 12. 5 kHz. Each sample represents an 80.0 µs integration interval.
3. After being triggered by event $10, the BLM signals are integrated and digitized for 40.0 ms, producing a FIFO buffer of 500 data points for each device.
4. The front end processor begins collecting data from the BLM Digitizer modules over the VME bus approximately 40 ms after event $10.

5. It is expected that the front end processor will have collected the data from as many as 24 BLM channels by 52 ms after event $10.
6. At this point in the 15 Hz cycle, 500 point buffers will have been filled with the BLM data for the *current* cycle. One for each BLM channel in the crate. This is the base "80 µs Integrated Data".
7. A pedestal for each channel is computed using the first 16 data points from that channel.
8. From the buffers of 80 µs Integrated Data the "Full Cycle Sampled Accumulation" data buffers are computed with the pedestal subtraction applied.
9. The Full Cycle Sampled Accumulation data is scaled into Rads (x4000). By scaling up by 4000 we convert milli-Rads into integer values. Once in ACNET the values are divided by 4000 to provide floating point values in the proper units.
10. The "1 ms Integration Samples" buffers are computed by taking every 12th (actually every 12.5th) Full Cycle Sampled Accumulation point, and then differentially determining the loss in each of the 40, 1 ms intervals.
11. Each cycle, for each channel, a total loss value is computed from the Full Cycle Sampled Accumulation data by subtracting an initial point from a final point.
12. Using values from the total loss per cycle value, the 17 second sums are accumulated.
13. Every 250th 15 Hz cycle the "100 Second Moving Sums" are updated by summing the most recent 6, 17 second sums.
14. In the remaining time before the front end is required to begin the VME bus transfers with the BLM Digitizer modules, the front end must service the ACNET requests for data. These include the data logging requests for the "1 ms Integrated Samples", the ACNET B88 bar graph display requests for the "100 Second Moving Sums" data, and Snapshot or other plotting application requests.

IV. Signal Processing: Computing of Various Sums

Recall that within the Digitizer card the charge produced by the BLM ion chamber is integrated, or summed, over a 20 µs interval and is then digitized to produce a number. These 20 µs samples are summed into 80 µs samples. The 80 µs samples are divided by 4 to reduce the word size for transfer over the VME bus.

Within the crate processor the BLM data is stored as several different types of sums. Once the 80 µs samples are transferred to the processor, they are summed to represent longer intervals of time, and they are summed in distinctly different manners to represent the accumulation of BLM charge (beam loss) in different ways.

IV.1 The Base 80 µs Integration Samples

There is a 500 point buffer for up to 24 channels of 80 µs integrated data read from the BLM Digitizers over the VME bus. This data is used to produce the other forms of data described in the sections that follow.

IV.1.1 Ideal Scaling of Digitizer Values to Rads and Rads/Second

The sealed ion chamber used in the Booster has a scale factor of 70 nano-Coulombs per Rad of radiation that passes though its cross section. The charge produced by the ion chamber is accumulated in the BLM integrating amplifiers. The integration capacitor in the normal operating mode is 100 pF, and the full scale output of the integrator is 10 Volts. Therefore the full scale output in Coulombs is

$$Q = V \cdot C = 10 \cdot 100E - 12 = 1.0\, nanoCoulomb$$

The integrator voltage is digitized with a 16 Bit ADC giving

$$\frac{1.0E - 9\ Coulombs}{65{,}535\ Counts} = \frac{15.26\ femtoCoulombs}{Count}$$

Applying the relationship between Rads and the Coulombs of charge produced by the Loss Monitor Ion chamber we get

$$\frac{15.26\ femtoCoulombs}{Count} \cdot \frac{Rad}{70\ nanoCoulombs} = \frac{0.218\ microRad}{Count}$$

This is the conversion before we *average* four integration intervals together and store the average in the FIFO from which the processor gets its values. Therefore the conversion that is to be applied to the values read from the FIFO's by the processor is

$$\boxed{4 \cdot \frac{0.218\ microRad}{Count} = \frac{0.872\ microRad}{Count}}$$

The measurement made is an integration or summing of charge from the Loss Monitor ion chamber. If we wish to compute Rad/Second, the rate at which radiation is impacting the ion chamber, we must settle for the average rate over some time interval. The smallest time interval is the 20.0 µs interval that the digitized integrator values represent. Since the values written to the FIFO's is the average value over 4 each 20.0 µs intervals one can compute the Rads/Sec rate these values describe

$$\frac{1}{20.0\ microSeconds} \cdot \frac{0.218\ microRad}{Count} = \frac{0.0109\left(\frac{Rad}{Second}\right)}{Count}$$

IV.2 The Full Cycle Sampled Accumulation (BLME Support)

After the 80 µs samples have been read from the Digitizer cards, the data is summed into 500 Long Integer values of a continuously integrating signal. That is,

$$S(k) = S(k-1) + A(k) - pedestal, \qquad for\ k = 1 \ldots 499$$

$$S(0) = A(0)$$

where $S(k)$ are samples of the continuously integrating signal and $A(k)$ are the 80 µs integration samples. There is a 500 point buffer of this kind for as many as 24 BLM channels.

The Full Cycle Sampled Accumulation values are converted into units of Rads (x4000). This conversion will make the numbers smaller, small enough to reduce the digital values to 16 bits. The range and resolution are still acceptable. The maximum value in Rads can be 16.384 with an ideal resolution of 0.00025 Rads per bit. The charge in Coulombs from the BLM that results in this maximum in Rads was previously 58 Rads/Sec in the old system. Details on the scaling are given in a later section.

The conversion to Rads (x4000) is

$$Rads(k) = S(k) * 15/2^{12}$$

This data is what is delivered to ACNET for snapshot plots and parameter pages. The ACNET device names for this type of data have the form B: BLMxxx.

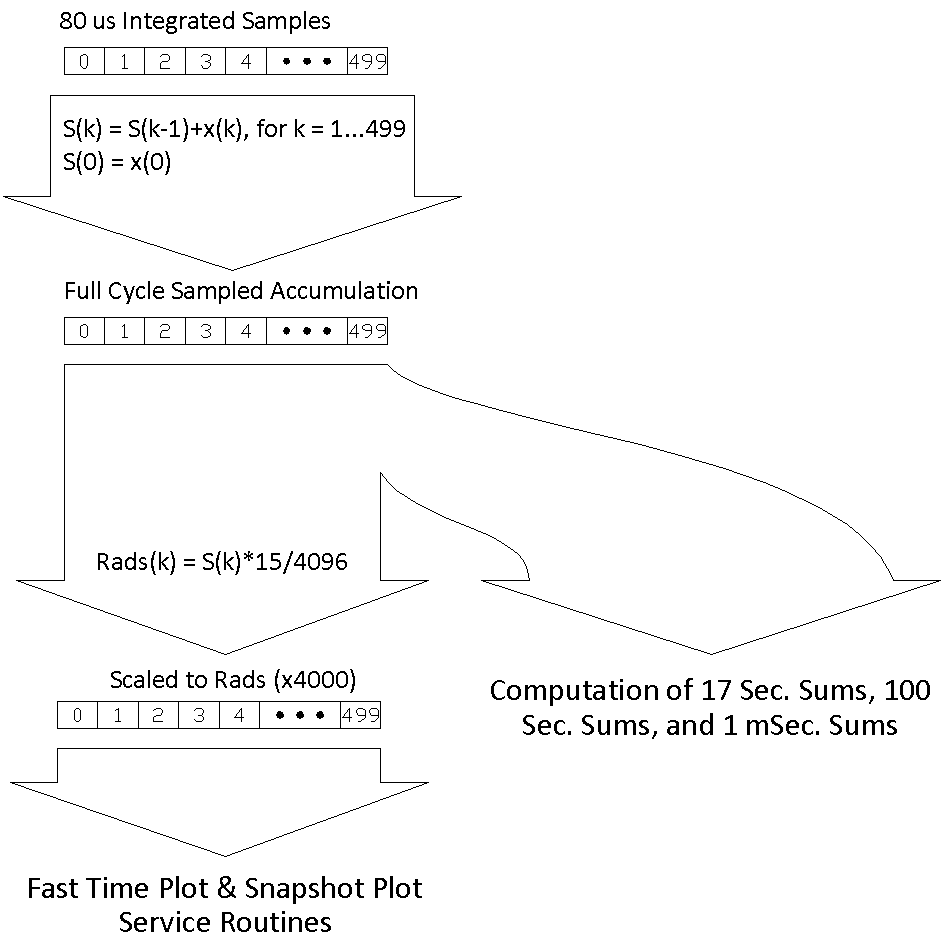

Figure IV.2.1 Illustration of the computed sums

IV.3 The 1 ms Integration Samples

Each cycle, the data is summed into 40 each 1 ms sums. That is,

$$w(0) = S(11) - S(0)$$

$$w(1) = S(23) - S(12)$$

$$w(2) = S(35) - S(24)$$

$$\vdots$$

$$w(39) = S(499) - S(488)$$

where $S(k)$ are the Full Cycle Sampled Accumulation points and $w(k)$are the 1 ms sums. These sums are double precision floating point values. There is a 40 point buffer of this kind for each

of the 12 Booster cycle types, for each of as many as 24 BLM channels in a crate. That is 288 (=12 x 24) of this kind of buffer possible per crate.

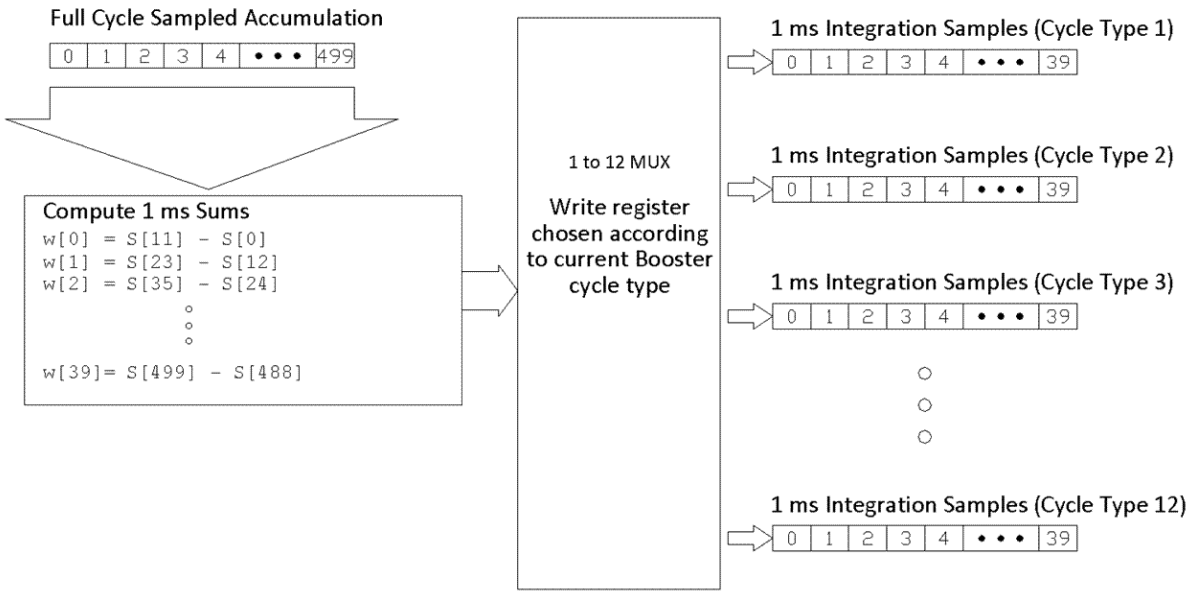

Figure IV.2.1 Illustration of the 1 milli-second sums signal processing for each BLM

IV.4 The 100 Second Moving Sums (BLMS Support)

For each of the 12 booster cycle types, for each BLM channel, 100 second moving sums are maintained. The 100 second sum is the sum of 6 each, 17 second sums. These 17 second sums are stored in a circular buffer, 6 values deep. Each time a new 17 second sum is added to the 100 second sum, the oldest 17 second sum in the circular buffer is subtracted off.

In order to compute the 17 second sums (which are actually 250, 15 Hz cycles), additional sum registers are maintained for the 12 Booster cycle types, for each BLM channel. When processing the data for a specific Booster cycle type the initial value is subtracted from the final value of the Full Cycle Sampled Accumulation data. This is added to the 17 second sum value for that specific cycle type, for the specific BLM channel.

When a counter counting 15 Hz cycles reaches 250 (~17 seconds) the 100 second sums and their associated circular buffers are updated with the values in the 17 second sum registers. Then the 17 second sums are reset to zero.

Trip settings have been enabled on many of the Booster BLM's, 100 second sum value. This has been done to limit losses in order to prevent excessive activation of the accelerator components. The ACNET devices to which the alarms have been applied are the B:BLxxx0

devices (where xxx is a 3 letter location description). These devices contain sums of the total losses recorded on all beam resets (event 10's) during the last 100 seconds and updated every 17 seconds.

To review, there is a 17 second sum register and a 6 deep circular buffer of 17 second sums for each of the 12 Booster cycle types, for each of as many as 24 BLM channels. That's as many as 288, 17 second sum registers and circular buffers.

In addition to maintaining these 100 second moving beam loss values, a 100 second moving count of the occurrence of each of the specific Booster reset events (those triggers which initiate the different Booster cycle types) is maintained. These are also updated by maintaining 17 second counts of the Booster reset events and 6 deep circular buffers of the 17 second counts. In this case there are only 12 sets of counts and circular buffers. One set for each Booster reset event.

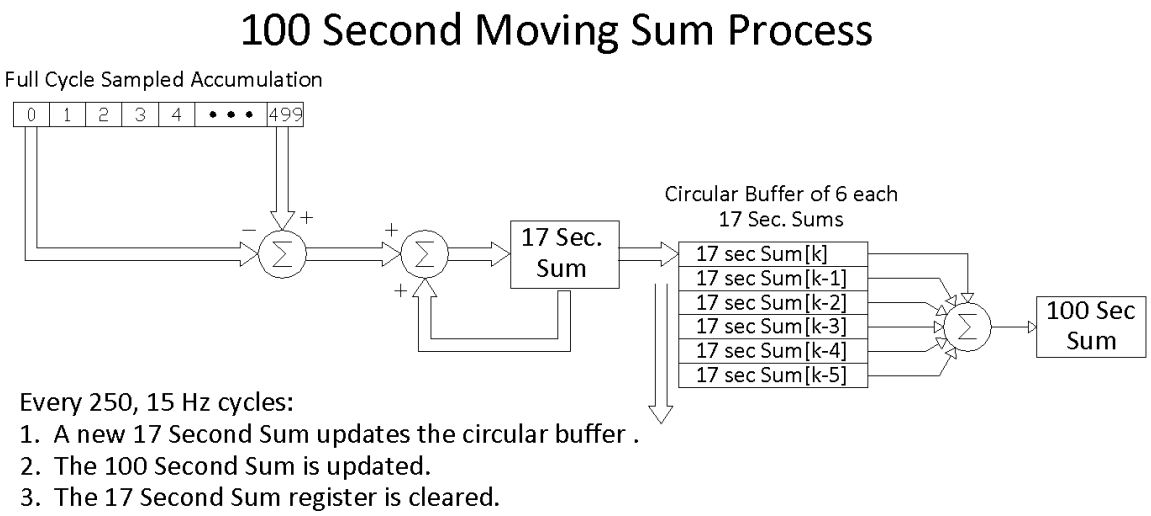

Figure IV.4.1 Illustration of the 100 second moving sums signal processing

IV.5 The 7.5 Hz Waveform Buffers (RETDAT Support)

Requests may be made from ACNET applications to receive data for a specific set of channels on the BLM front-end processor at a 7.5 Hz update rate. Since the Booster cycles at a 15 Hz rate, two cycles worth of data are returned at the 7.5 Hz rate. The data returned is for the specified channel with no distinction with regard to the type of Booster cycle the data was collected over or whether there was even beam in the Booster during the interval. In addition to BLM data channels, there are channels that report the specific Booster reset events that may or may not have occurred over the last 133 ms (inverse of 7.5 Hz). Also along with the data is

included the specific "cycle counts" for the two cycles of data in the update response. The cycle count information can be used to correlate the Booster reset event information with the data taken during the cycle the reset event triggered.

The BLM channel data will be the 500 point Full Cycle Sampled Accumulation waveform. For each BLM channel, 2 of these waveforms are transmitted to the requesting ACNET application every 133 ms.

V. BLM Digitizer Calibration

V.1 Scaling for the New Integrator

The combination of integrators and analog to digital conversion, results in a conversion between Coulombs of charge in and the resulting 16 bit digitized result out. In the default Low Range mode the integration opamp contains a 100 pico-farad feedback capacitor. This produces a voltage out of the integration opamp of (1/100E-12) (volts/coulomb). The integrator output is then scaled to fit the input range of the ADC digitizer, 0.483 (volts/volt).

The integrator output voltage digitized each 20 µs sampling interval is the sum of the charge collected in the previous 20 µs interval. Note that the final sampling interval we will end up with is 80 µs. The voltage at the input to the analog to digital converter is

$$V^*(t) = \frac{0.4827}{100E-12} \int_{t}^{t+T/4} Q_{in}(\tau)\, d\tau\,, \qquad where\ T = 80\ \mu s$$

Let us represent the k_{th} digitized 20 µs integration sample as $Y^*\left(k \cdot T/4\right)$. The digitizer outputs a 16 bit value and has an input voltage range of 5 volts.

$$Y^*\left(k \cdot T/4\right) = \frac{65536}{5} \cdot V^*\left(k \cdot T/4\right)$$

The digitized value written to FIFO memory on the digitizer module, and read by the front-end processor, is the average of 4 of these 20 µs integration samples. These can also be described as scaled 80 µs integration samples.

$$A^*(k \cdot T) = \frac{65536}{5} \cdot \frac{1}{4} \cdot \left[V^*\left(k \cdot \frac{T}{4}\right) + V^*\left(2 \cdot k \cdot \frac{T}{4}\right) + V^*\left(3 \cdot k \cdot \frac{T}{4}\right) + V^*(k \cdot T)\right]$$

$$A^*(k \cdot T) = G_1 \cdot \left[\int_{(k-1)\cdot T}^{k\cdot T/4} Q_{in}(\tau)\, d\tau + \int_{k\cdot T/4}^{k\cdot T/2} Q_{in}(\tau)\, d\tau + \int_{k\cdot T/2}^{k\cdot 3\cdot T/4} Q_{in}(\tau)\, d\tau + \int_{k\cdot 3\cdot T/4}^{k\cdot T} Q_{in}(\tau)\, d\tau\right]$$

$$A^*(k \cdot T) = G_1 \cdot \int_{(k-1)\cdot T}^{k\cdot T} Q_{in}(\tau)\, d\tau\,, \qquad where\ k = 1, 2, 3, \cdots, 500.$$

where

$$\boxed{G_1 = \frac{65536}{5} \cdot \frac{1}{4} \cdot \frac{0.4827}{100E-12} = 15.8171E12\ (Bits/Coulomb)}$$

The Full Cycle Sampled Accumulation is a summing of the 80 µs integration samples, $A^*(k)$.

$$S(k \cdot T) = S\big((k-1) \cdot T\big) + A^*(k \cdot T)$$

$$S(k) = A^*(1) + A^*(2) + A^*(3) + \cdots + A^*(k)$$

$$S(k \cdot T) = G_1 \cdot \int_{0}^{k\cdot T} Q_{in}(\tau)\, d\tau$$

$$S(k) = G_1 \cdot Q_{sum}(k)$$

S(k) is a digital value of the sum of charge in coulombs produced by the Loss Monitor ion chamber. To convert this to Rads we use the standard calibration of the ion chamber, $70E-9\ Coulombs/Rad$.

$$Rads\ (x4000) = S(k) \cdot H_1\ (x4000),$$

$$where\ H_1 = (G_1 \cdot 70E-9)^{-1} = 903.182E-9(Rads/Bit)$$

For the sake of faster computation within the crate processor we approximate H_1 as

$$H_1\ (x4000) = \frac{15}{2^{12}} = 915.527E-9\ (x4000)$$

VI. Changes for the Operator

The scaling of the values seen by the operators monitoring the beam losses in the booster is different using Rads versus the previous Rads/Second. A significant effort was undertaken to determine the scaling of the Log Integrators before they were replaced. The goal was to be able to predict the changes to the BLM values read and plotted.

In order to ensure that we understood the calibration of each of the Log Integrators we performed input/output calibration measurements on each one. The calibration involves injecting a known charge profile into the Log Integrator and measuring the voltage output. Figure VI.1 shows a sample plot of the results with a fit to the equation

$$V^o(t) = C_1 \cdot Ln\left(\int_0^t Q(\tau)\, d\tau\right) + C_2$$

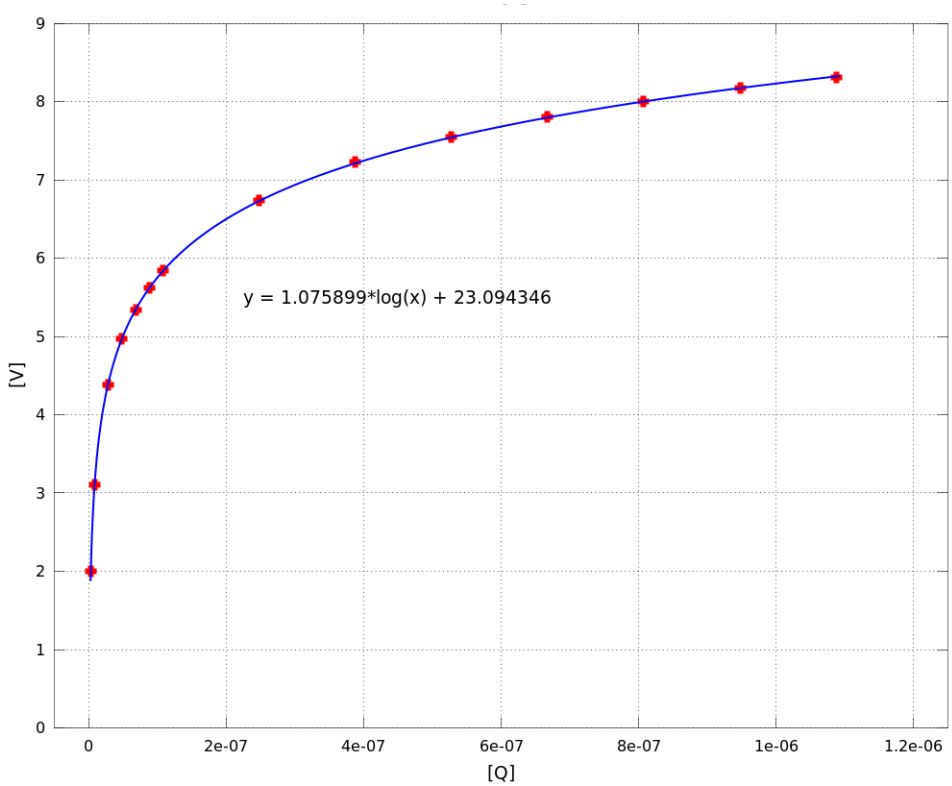

Figure VI.1 Log Integrator voltage out versus charge in.

A pair of coefficients (C_1, C_2) were determined for each BLM channel we intended to replace. These are listed in Listing VI.1. For a given BLM charge in, the expected Log Integrator output in Rads/Second and the expected value out of the new integrators were computed and compared. A scale factor between the Log Integrator for each BLM and the new integrators were determined so we could see how the BLM values presented to the operators would change. The scale factors are also listed in Listing VI.1.

Additionally, the 100 Second Sums for each BLM has an alarm limit (maximum) associated with it in the ACNET control system. Using the scale factor determined for each BLM, new maximum limits have been estimated. The old and new limits are listed in Listing VI.1 also.

Listing VI.1 Log Integrator Calibration Coefficients

Channel	C1	C2	m	Rad/Sec Max Limit	Scale Factor, m	Expected Rad Max Limit
L01	1.058726	23.138925	4.026557	25	4.0266	6.209
L02	1.079847	23.613476	4.868800	340	3.5795	94.984
L03	1.066126	23.280417	4.192278	28	4.8688	5.751
L04	1.085368	23.813356	5.544046	1300	4.4170	294.320
L05	1.085209	23.694054	4.898254	150	4.1923	35.780
L06	1.066535	21.702730	0.785346	163	6.2873	25.925
L07	1.059226	22.162795	1.423333	50	5.5440	9.019
L08	1.056286	22.245239	1.621982	100	5.3634	18.645
L09	1.073892	22.862261	2.401757	50	4.8983	10.208
L10	1.072113	22.896017	2.555346	300	4.5928	65.320
L11	1.067870	22.694835	2.199140	600	0.7853	763.995
L12	1.049345	22.790893	3.200770	1800	1.8654	964.940
L13	1.071808	23.106934	3.208474	280	1.4233	196.721
L14	1.097026	23.695018	4.118009	200	1.2051	165.968
L15	1.110667	23.879618	4.092676	100	1.6220	61.653
L16	1.024595	22.345971	2.882238	120	1.7837	67.275
L17	1.055373	22.956385	3.488143	40	2.4018	16.654
L18	1.040472	23.073156	4.918920	100	2.9785	33.574
L19	1.061679	23.379040	4.969242	100	2.5553	39.134
L20	1.048828	23.145449	4.692994	100	2.1484	46.547
L21	1.042727	23.079758	4.791032	28	2.1991	12.732
L22	1.072445	23.848534	6.964521	85	1.9345	43.938
L23	1.062033	23.405727	5.084851	26	3.2008	8.123
L24	1.050297	23.093264	4.345596	100	4.4093	22.679
S01	1.056624	22.998315	3.579550	500	3.2085	155.837
S02	1.075080	23.454829	4.416965	500	3.3736	148.209
S03	1.101798	24.161697	6.287340	55	4.1180	13.356
S04	1.088620	23.827456	5.363447	118	3.9365	29.976
S05	1.096000	23.783848	4.592772	40	4.0927	9.774
S06	1.055089	22.360708	1.865400	190	3.9484	48.121
S07	1.066470	22.106592	1.205052	50	2.8822	17.348
S08	1.056672	22.340495	1.783726	120	4.6304	25.915
S09	1.094737	23.356804	2.978504	25	3.4881	7.167
S10	1.089401	22.973435	2.148376	120	3.7317	32.157
S11	1.068449	22.581719	1.934524	42	4.9189	8.538
S12	1.101710	23.825023	4.409288	288	4.7428	60.724
S13	1.089368	23.399598	3.373609	95	4.9692	19.118
S14	1.103289	23.739831	3.936461	300	7.7871	38.525

S15	1.105098	23.767950	3.948408	75	4.6930	15.981
S16	1.084828	23.635577	4.630436	100	7.0607	14.163
S17	1.071826	23.250011	3.731732	50	4.7910	10.436
S18	1.051381	23.191091	4.742779	225	5.6366	39.918
S19	1.103661	24.389953	7.787109	43	6.9645	6.174
S20	1.111293	24.403921	7.060733	225	7.1348	31.536
S21	1.080141	23.756021	5.636621	50	5.0849	9.833
S22	1.102112	24.285618	7.134779	135	6.3742	21.179
S23	1.110512	24.296315	6.374198	38	4.3456	8.744
S24	0.953993	20.742134	1.501187	225	1.5012	149.881
21	1.051732	22.157015	1.580308	55	1.5803	34.803
23	1.074219	22.391647	1.452909	100	1.4529	68.827
24	1.052937	22.577092	2.420949	50	2.4209	20.653
25	1.056401	22.805972	2.930219	525	3.2415	161.962
26	1.043974	22.727813	3.241510	85	2.9302	29.008
61	1.090309	24.170073	7.516283	500	7.5163	66.522
62	1.085402	23.865600	5.856105	1600	5.8561	273.219
71	1.137023	24.852544	7.761957	280	7.7620	36.073
72	1.118057	24.430559	6.572250	280	6.5722	42.603

PB B11 CE PARAMETERS #1<NoSets>

B11 BLM SUMS S13-S24 MIN MAX A/D Com-U ◆PTools◆

-<FTP>+ *SA◆ X-A/D X=TIME Y=Z:TARCI ,Z TARCV ,Z:TCTEMP,Z:TSTEMP

COMMAND ---- Eng-U I= 0 I= 0 , 0 , 0 , 0

-<15>+ One+ 1_Hz F= 1000 F= 20 , 180 , 350 , 200

HL	hs	vl	vs	ql	qs	sl	ss
B:BLS130	BLM Sum S1			-1	500	48.53	R/s
B:BLL140	BLM Sum L1			-1	55	10.88	R/s
B:BLS140	BLM Sum S1			-1	118	20.29	R/s
B:BLL150	BLM Sum L1			-1	40	9.03	R/s
B:BLS150	BLM Sum S1			-1	190	10.33	R/s
B:BLL160	BLM Sum L1			-1	50	9.175	R/s
B:BLS160	BLM Sum S1			-1	120	13.08	R/s
B:BLL170	BLM Sum L1			-1	25	8.403	R/s
B:BLS170	BLM Sum S1			-1	120	19.77	R/s
B:BLL180	BLM Sum L1			-1	42	11.62	R/s
B:BLS180	BLM Sum S1			-1	288	13.22	R/s
B:BLL190	BLM Sum L1			-1	95	16.69	R/s
B:BLS190	BLM Sum S1			-1	300	25.49	R/s
B:BLL200	BLM Sum L2			-1	75	8.229	R/s
B:BLS200	BLM Sum S2			-1	100	32.93	R/s
B:BLL210	BLM Sum L2			-1	50	12.54	R/s
B:BLS210	BLM Sum S2			-1	225	11.22	R/s
B:BLL220	BLM Sum L2			-1	43	13.42	R/s
B:BLS220	BLM Sum S2			-1	225	6.302	R/s
B:BLL230	BLM Sum L2			-1	50	9.058	R/s
B:BLS230	BLM Sum S2			-1	135	12.33	R/s
B:BLL240	BLM Sum L2			-1	38	11.56	R/s
B:BLS240	BLM Sum S2			-1	225	16.64	R/s
B:BL0250	BLM Sum US			-1	85	9.906	R/s
B:BL0260	BLM Sum MP			-1	525	178.1	R/s
B:BL0230	BLM DS Pan			-1	100	10.46	R/s
B:BL0210	BLM Sum 2-			-1	55	11.77	R/s
B:BL0240	BLM Sum 2-			-1	50	23.76	R/s
B:BPL5MA	Beam Power			-10	525	478.8	WATT
B:BLM011	BLM inside					.031	R/S
B:BL1260	BLM Sum MP			-1	325	1.894	R/s
B:BL1250	BLM Sum US			-1	180	41.23	R/s
B:BL1240	BLM Sum 12			-1	30	2.402	R/s
B:BL1230	BLM Sum 12			-1	1500	8.063	R/s
B:BL1220	BLM Sum 12			-1	30	2.027	R/s
B:BL1210	BLM Sum 12			-1	200	2.559	R/s

Alarm Thresholds (Rads/Sec) before upgrade

PB B11 CE PARAMETERS #1<NoSets>

B11 BLM SUMS L1-L13 MIN MAX A/D Com-U ◆PTools◆

-<FTP>+ *SA◆ X-A/D X=TIME Y=Z:TARCI ,Z TARCV ,Z:TCTEMP,Z:TSTEMP

COMMAND ---- Eng-U I= 0 I= 0 , 0 , 0 , 0

-<14>+ One+ 1_Hz F= 1000 F= 20 , 180 , 350 , 200

HL	hs	vl	vs	ql	qs	sl	ss
B:BLL010	BLM Sum L0			-1	25	5.879	R/s
B:BLS010	BLM Sum S0			-1	340	158.2	R/s
B:BLL020	BLM Sum L0			-1	28	7.319	R/s
B:BLS020	BLM Sum S0			-1	1300	396.5	R/s
B:BLL030	BLM Sum L0			-1	150	33.78	R/s
B:BLS030	BLM Sum S0			-1	163	40.84	R/s
B:BLL040	BLM Sum L0			-1	50	9.838	R/s
B:BLS040	BLM Sum S0			-1	100	8.208	R/s
B:BLL050	BLM Sum L0			-1	50	8.069	R/s
B:BLS050	BLM Sum S0			-1	300	21.74	R/s
B:BLL060	BLM Sum L0			-1	600	26.49	R/s
B:BLS060	BLM Sum S0			-1	1800	1088	R/s
B:BLL070	BLM Sum L0			-1	280	45.25	R/s
B:BLS070	BLM Sum S0			-1	200	53.33	R/s
B:BLL080	BLM Sum L0			-1	100	1.975	R/s
B:BLS080	BLM Sum S0			-1	120	20.97	R/s
B:BLL090	BLM Sum L0			-1	40	3.313	R/s
B:BLS090	BLM Sum S0			-1	100	7.121	R/s
B:BLL100	BLM Sum L1			-1	100	1.668	R/s
B:BLS100	BLM Sum S1			-1	100	2.511	R/s
B:BLL110	BLM Sum L1			-1	28	6.978	R/s
B:BLS110	BLM Sum S1			-1	85	24.75	R/s
B:BLL120	BLM Sum L1			-1	26	3.019	R/s
B:BLS120	BLM Sum S1			-1	100	5.667	R/s
B:BLL130	BLM Sum L1			-1	500	21.88	R/s
B:BLS130	BLM Sum S1			-1	500	49.32	R/s
B:BL0610	BLM Sum 06			-1	500	89.01	R/s
B:BL0620	BLM Sum 06			0	1600	835.6	R/s
B:BL0710	BLM Sum 07			-1	280	24.09	R/s
B:BL0720	BLM Sum 07			0	280	31.07	R/s

Alarm Thresholds (Rads/Sec) before upgrade

Appendix A: Scaling for the Log Integrator

For reference we present the scaling details on the older Log Intergrators that have been used in the past.

Scaling for the Log Integrators has been presented by Robert Schafer back around 1982. Reproductions of his plots are provided in Appendix A. The Acnet control system scales the Log Integrator output from what it expects to be the voltage output, V^o, of the integrators to Rads per Second, RS. This conversion is given as

$$RS = d_1 \cdot EXP[d_2 \cdot V^o], \qquad where\ d_1 = 0.00721196\ and\ d_2 = 1.057772$$

This is the expected calibration for the Booster BLM's. Over the years the values produced by the BLM's have been correlated to the activation of equipment in the Booster tunnel, and alarm limits have been established based on these relationships. In replacing the integrators in the BLM system we wish to understand the relationship between the values generated by old and the new integrators given the same charge input from the BLM ion chamber.

In order to ensure that we understand the calibration of each of the Log Integrators that has been in service we performed input/output calibration measurements on each one. The calibration involves injecting a known charge profile into each Log Integrator and measuring the voltage output. Figure A.1 shows a sample plot of the results with a fit to the equation

$$V^o(t) = C_1 \cdot Ln\left(\int_0^t Q(\tau)\, d\tau\right) + C_2$$

The Log Integrators are digitized to 16 bits with a range of +/-10 volts. The result is

$$Y^o(k \cdot T) = \frac{65536}{20} \cdot V^o(k \cdot T)$$

$$Y^o(k \cdot T) = 3276.8 \cdot \left[C_1 \cdot Ln\left(\int_0^{k \cdot T} Q(\tau)\, d\tau\right) + C_2\right] = 3276.8 \cdot \left[C_1 \cdot Ln\big(Q_{sum}(k)\big) + C_2\right]$$

Figure A.2 and Figure A.3 are reproductions of the original Log Integrator calibration plots.

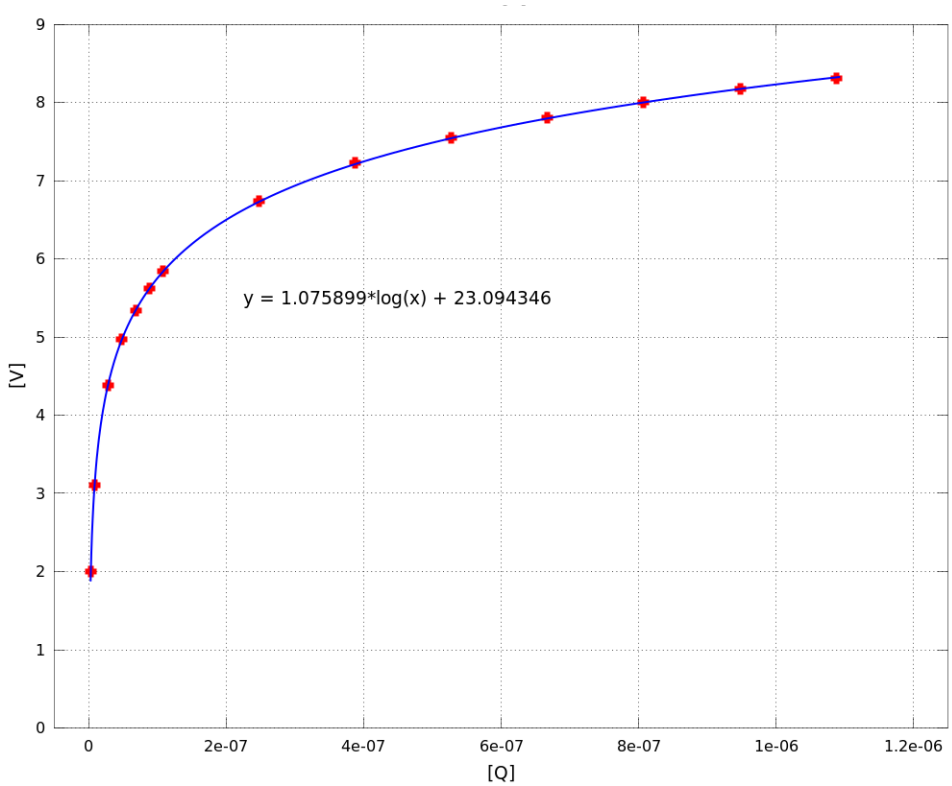

Figure A.1 Log Integrator voltage out versus charge in.

Data From Schafer's Log Amp Plots

Vout@20 degC	Vout@40 degC	Mean Vout	Input Current
9.100	9.780	9.440	1.00E-05
8.800	9.400	9.100	7.00E-06
8.500	9.100	8.800	5.00E-06
7.520	8.050	7.785	2.00E-06
6.850	7.300	7.075	1.00E-06
6.500	7.000	6.750	7.00E-07
5.650	6.100	5.875	3.00E-07
4.590	4.950	4.770	1.00E-07
4.200	4.600	4.400	7.00E-08
3.500	3.750	3.625	3.00E-08
2.550	2.550	2.550	1.00E-08
1.980	1.980	1.980	5.00E-09
1.300	1.300	1.300	2.00E-09
1.000	1.000	1.000	1.00E-09
0.800	0.800	0.800	5.00E-10
0.650	0.650	0.650	2.00E-10
0.570	0.570	0.570	1.00E-10

I = 70E-9*(R/S)

Rads/Sec	Volts fit to I in	Volts fit to RAD/S
1.43E+02	9.353	9.353
1.00E+02	9.016	9.016
7.14E+01	8.698	8.698
2.86E+01	7.832	7.832
1.43E+01	7.177	7.177
1.00E+01	6.839	6.839
4.29E+00	6.038	6.038
1.43E+00	5.000	5.000
1.00E+00	4.663	4.663
4.29E-01	3.862	3.862
1.43E-01	2.823	2.823
7.14E-02	2.168	2.168
2.86E-02	1.301	1.301
1.43E-02	0.646	0.646
7.14E-03	-0.009	-0.009
2.86E-03	-0.875	-0.875
1.43E-03	-1.531	-1.531

Alternate Amps to Volts			
Volts = m*LN(s1*I)	m1	s1	
	9.453833E-01	1.980857E+09	
Amps to Volts	m2	b2	
Volts = m*LN(I) + b	9.453833E-01	2.023763E+01	
Volts to Amps	c1	c2	
I = c1*EXP(c2*Volts)	5.04832E-10	1.057772	

Alternate Rad/Sec to Volts			
Volts = m*LN(s1*R/S)	m	s1	
	9.453833E-01	1.386586E+02	
Rad/Sec to Volts	m	b	
Volts = m*LN(R/S) + b	0.945383315	4.662644237	
Volts to Rad/Sec	c1	c2	
R/S = c1*EXP(c2*Volts)	0.00721196	1.057772	

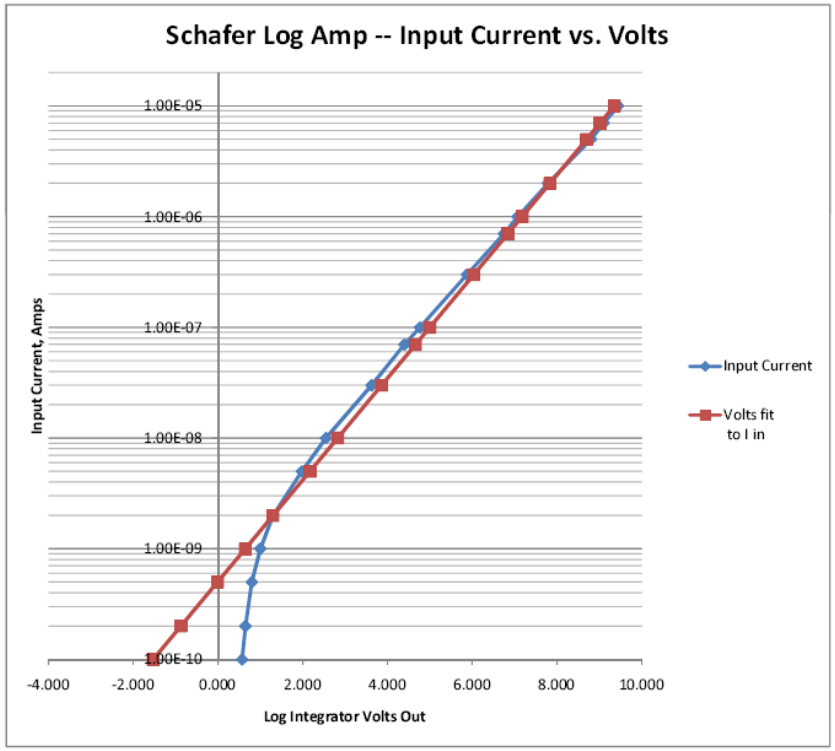

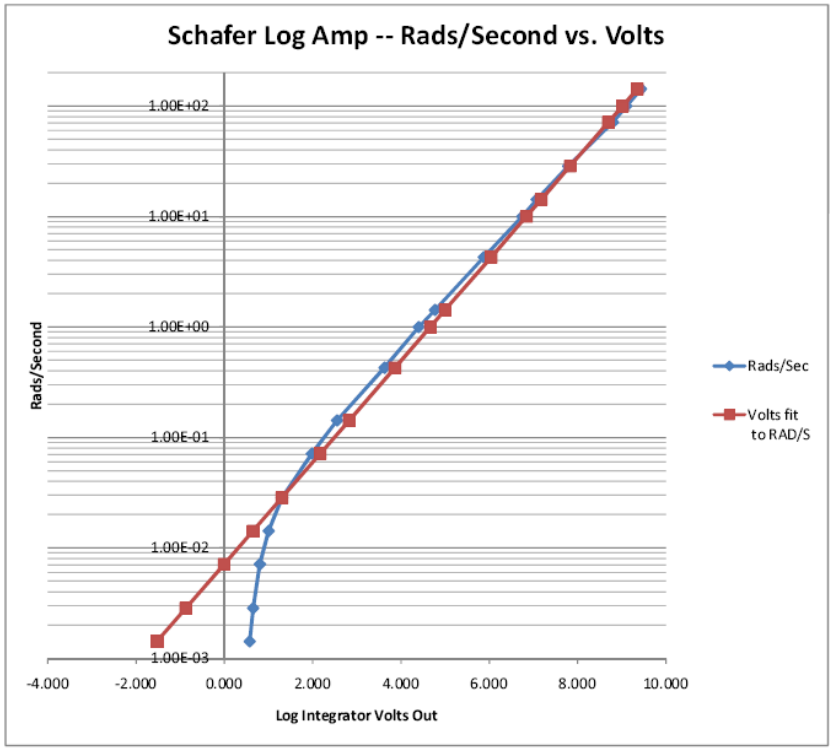

Figure A.2 Schafer Log Integrator data relating Current and Rads/Second to Volts out.

Data From Schafer's Log Amp Plots

I = 70E-9*(R/S)

Vout@20 degC	Vout@40 degC	Mean Vout	Input Charge	Rads	Volts fit to Q in	Volts fit to Rads
9.6	10.25	9.925	1.00E-06			
9.250	9.950	9.600	7.00E-07	1.00E+01	9.484	9.484
8.950	9.700	9.325	5.00E-07	7.14E+00	9.165	9.165
8.000	8.700	8.350	2.00E-07	2.86E+00	8.299	8.299
7.350	7.880	7.615	1.00E-07	1.43E+00	7.644	7.644
7.000	7.580	7.290	7.00E-08	1.00E+00	7.307	7.307
6.200	6.700	6.450	3.00E-08	4.29E-01	6.506	6.506
5.050	5.450	5.250	1.00E-08	1.43E-01	5.467	5.467
4.800	5.100	4.950	7.00E-09	1.00E-01	5.130	5.130
4.000	4.200	4.100	3.00E-09	4.29E-02	4.329	4.329
2.900	3.100	3.000	1.00E-09	1.43E-02	3.290	3.290
2.400	2.400	2.400	5.00E-10	7.14E-03	2.635	2.635
1.750	1.750	1.750	2.00E-10	2.86E-03	1.769	1.769
1.200	1.200	1.200	1.00E-10	1.43E-03	1.113	1.113
0.900	0.900	0.900	5.00E-11	7.14E-04	0.458	0.458
0.680	0.680	0.680	2.00E-11	2.86E-04	-0.408	-0.408
0.600	0.600	0.600	1.00E-11	1.43E-04	-1.063	-1.063

Alternate Coulombs to Volts			
Volts = m*LN(s1*Q)	m	s1	
	9.453833E-01		3.247273E+10
Coulomb to Volts	m	b	
Volts = m*LN(Q) + b	9.453833E-01		2.288174E+01
Volts to Coulomb	c1	c2	
Q = c1*EXP(c2*Volts)	3.07951E-11		1.057772

Alternate Rads to Volts			
Volts = m*LN(s1*R)	m	s1	
	9.453833E-01		2.273091E+03
Rads to Volts	m	b	
Volts = m*LN(R) + b	0.945383315		7.306769261
Volts to Rads	c1	c2	
R = c1*EXP(c2*Volts)	0.00043993		1.057772

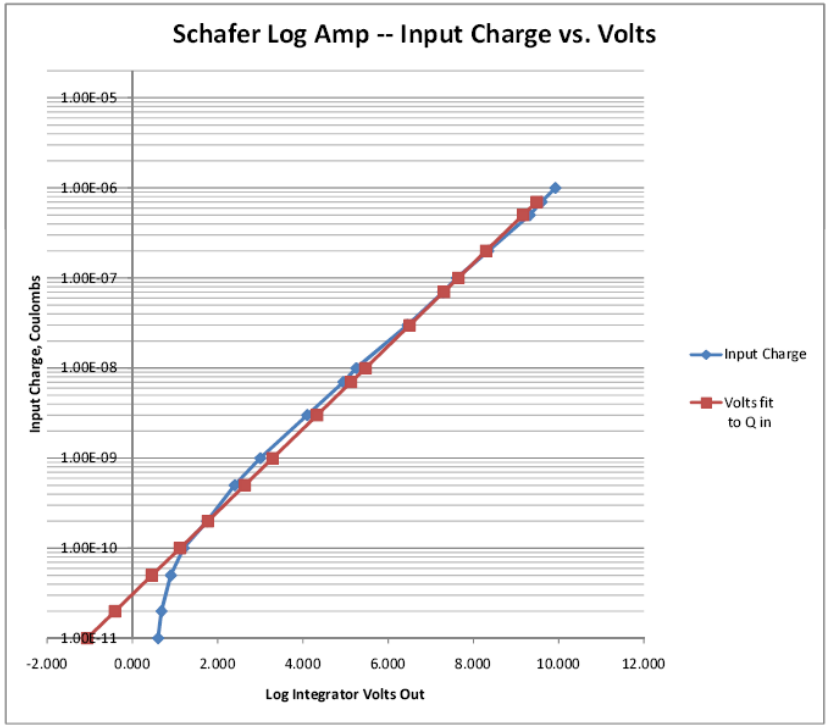

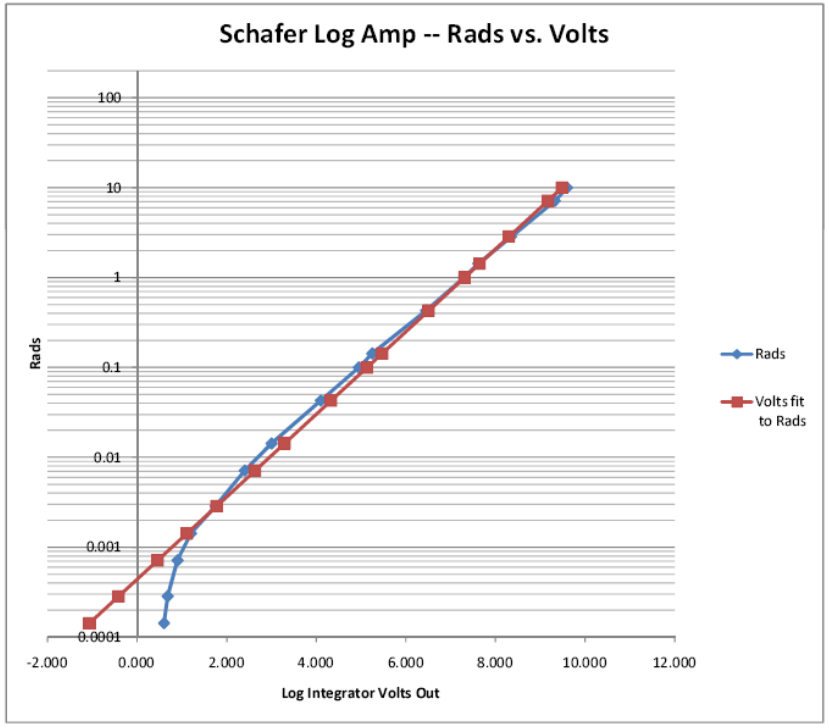

Figure A.3 Schafer Log Integrator data relating Charge and Rads to Volts out.