Firmware for:
CDF Diamond Abort Logic Card
Altera EP1K30QC208-2

FPGA Version ALCVME - 081707

PCB Version 1, Dated: 04/16/07
PPD/EED Drawing No. 0000-ED-173638

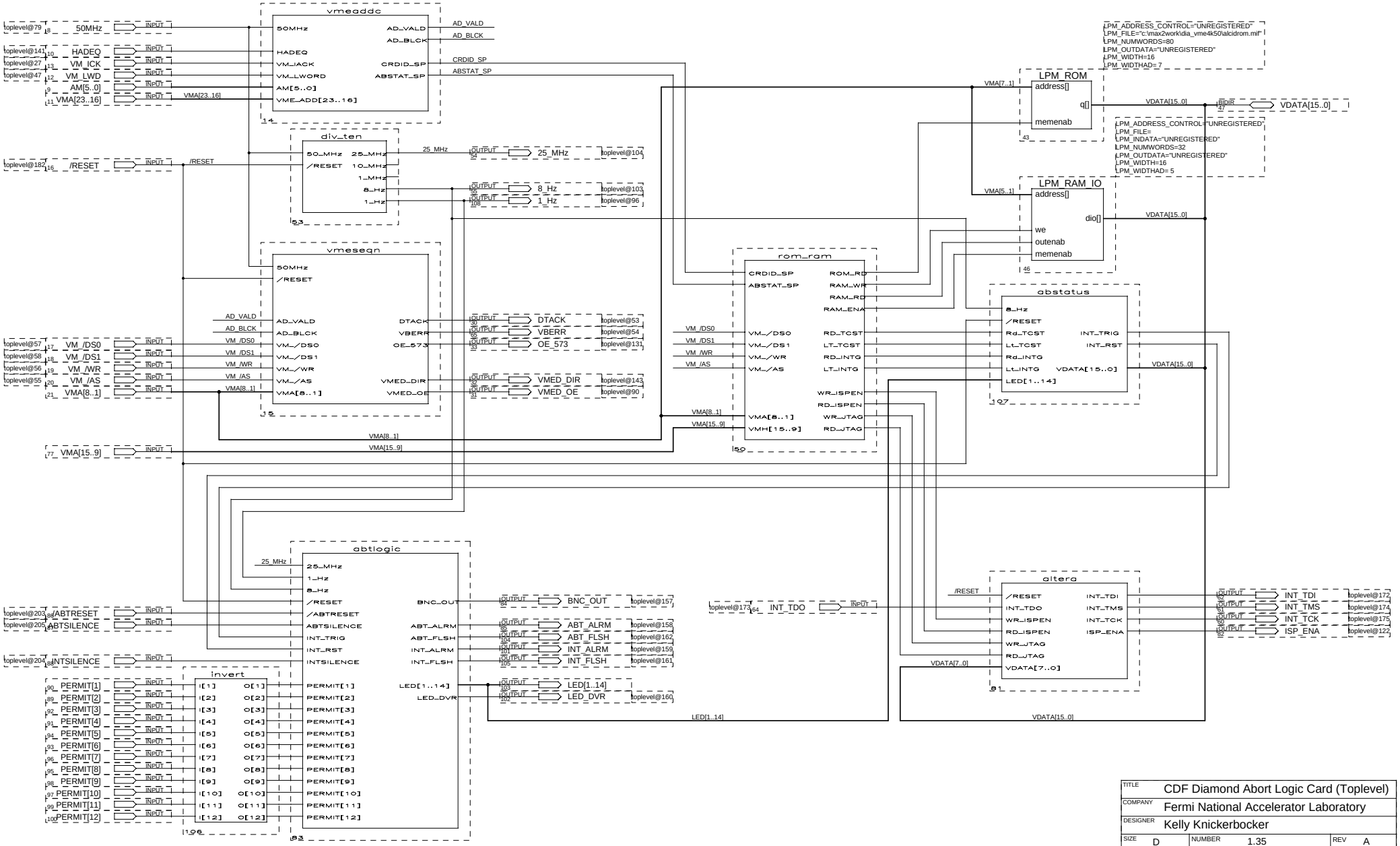

TITLE	CDF Diamond Abort Logic Card (Toplevel)		
COMPANY	Fermi National Accelerator Laboratory		
DESIGNER	Kelly Knickerbocker		
SIZE D	NUMBER 1.35	REV A	
DATE 1:50p 8-15-2007		SHEET 1	OF 1

```
TITLE "CDF Diamond Abort Logic Card VME Interface";

SUBDESIGN vmeaddc
(
    50MHz               : INPUT;
    HADEQ               : INPUT; % HADEQ is (VME_ADD[31..24] == SW[7..0]) Decode %
    VME_ADD[23..16]     : INPUT; % VME Address lines A23-16 %
    AM[5..0]            : INPUT; % VME Address modifiers %
    VM_IACK             : INPUT; % VME Interupt Acknowledge %
    VM_LWORD            : INPUT;
    AD_VALD             : OUTPUT; % Valid VME Address %
    AD_BLCK             : OUTPUT;
    CRDID_SP            : OUTPUT;
    ABSTAT_SP           : OUTPUT;
)
VARIABLE
    CKHADEQ : NODE;
    AM_VALD : NODE; % Valid Address Modifiers %
    AM_BLCK : NODE; % Valid Address Modifiers %

BEGIN
    CKHADEQ   = DFF(HADEQ, 50MHz, VCC, VCC);

% CDF Diamond Abort Logic Card 32-Bit VME Address Modifier Decode ---%
% EXTENDED 32-Bit ADDRESS MODIFIER DECODE ---------------------------%
% RESPOND TO VALID ADD MODIFIERS 09, 0A, 0D, 0E ---------------------%

      AM_VALD = (AM[5..0] == B"001001") # (AM[5..0] == B"001010")
              # (AM[5..0] == B"001101") # (AM[5..0] == B"001110");

% RESPOND TO VALID BLOCK XFER ADD MODIFIERS 0B, 0F ------------------%

      AM_BLCK = (AM[5..0] == B"001011") # (AM[5..0] == B"001111");

% VM_IACK = 0 when doing interrupt acknowledge cycle ----------------%
% VM_LWORD = 0 when doing unaligned or 32-Bit Data XFER -------------%
% HADEQ is output of ALS520 (VME_ADD[31..24] == SW[7..0]) -----------%

    !AD_VALD = (VM_IACK & VM_LWORD & AM_VALD & !CKHADEQ);

% RESPOND TO BLOCK XFER ADD MODIFIERS 0B, 0F ------------------------%
    !AD_BLCK = (VM_IACK & VM_LWORD & AM_BLCK & !CKHADEQ);

% Decode for CDF Diamond ALC ID Address Space ----------%
% Current ALC VME Address is at (XX000000)H -------------------------%
     CRDID_SP = (!AD_VALD & VME_ADD[23..16] == B"00000000");

% Decode for CDF Diamond ALC Status Register Address Space ----------%
% Current ALC VME Address is at (XX010000)H -------------------------%
     ABSTAT_SP = (!AD_VALD & VME_ADD[23..16] == B"00000001");

END;
```

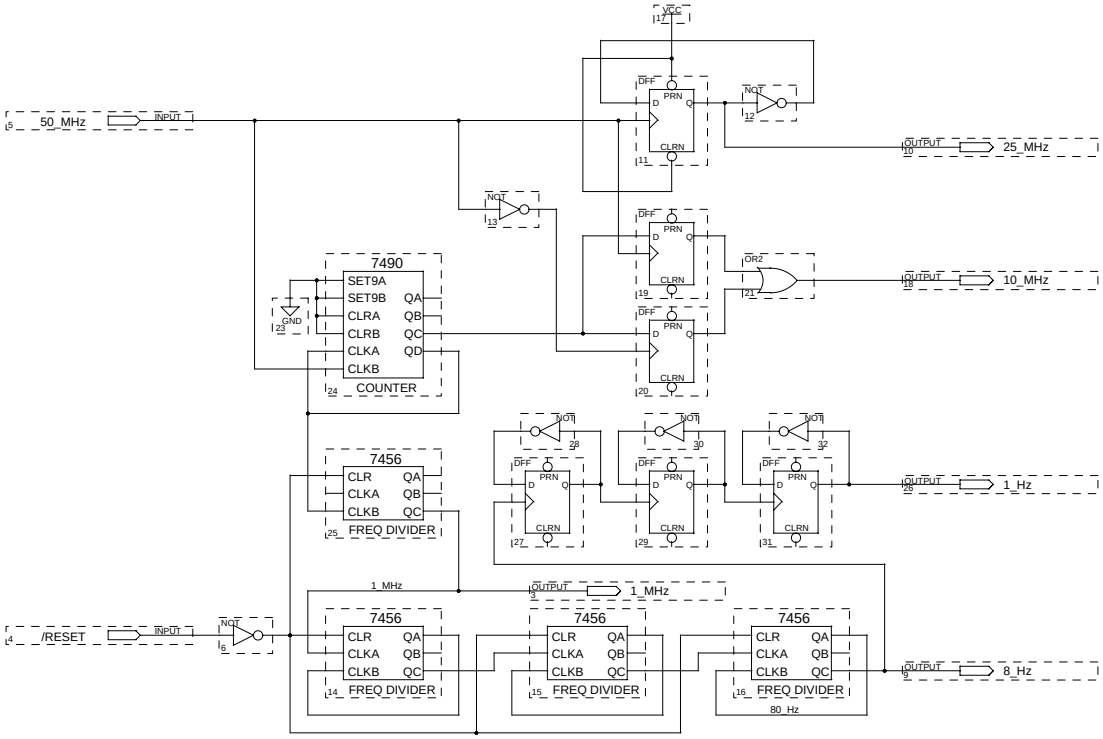

TITLE	CDF Abort Logic Card - Clock Divider		
COMPANY	Fermi National Accelerator Laboratory		
DESIGNER	Kelly Knickerbocker		
SIZE D	NUMBER 1.15		REV A
DATE 1:40p 8-15-2007		SHEET 1	OF 1

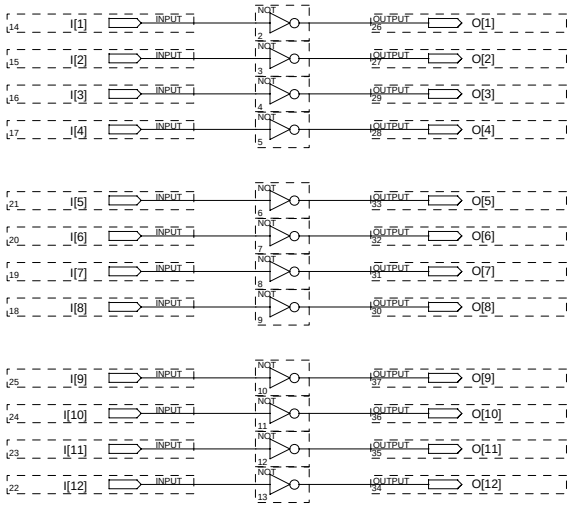

TITLE	CDF Abort Logic Card Inverters		
COMPANY	Fermi National Accelerator Laboratory		
DESIGNER	Kelly Knickerbocker		
SIZE D	NUMBER 1.00		REV A
DATE 1:40p 8-15-2007		SHEET 1	OF 1

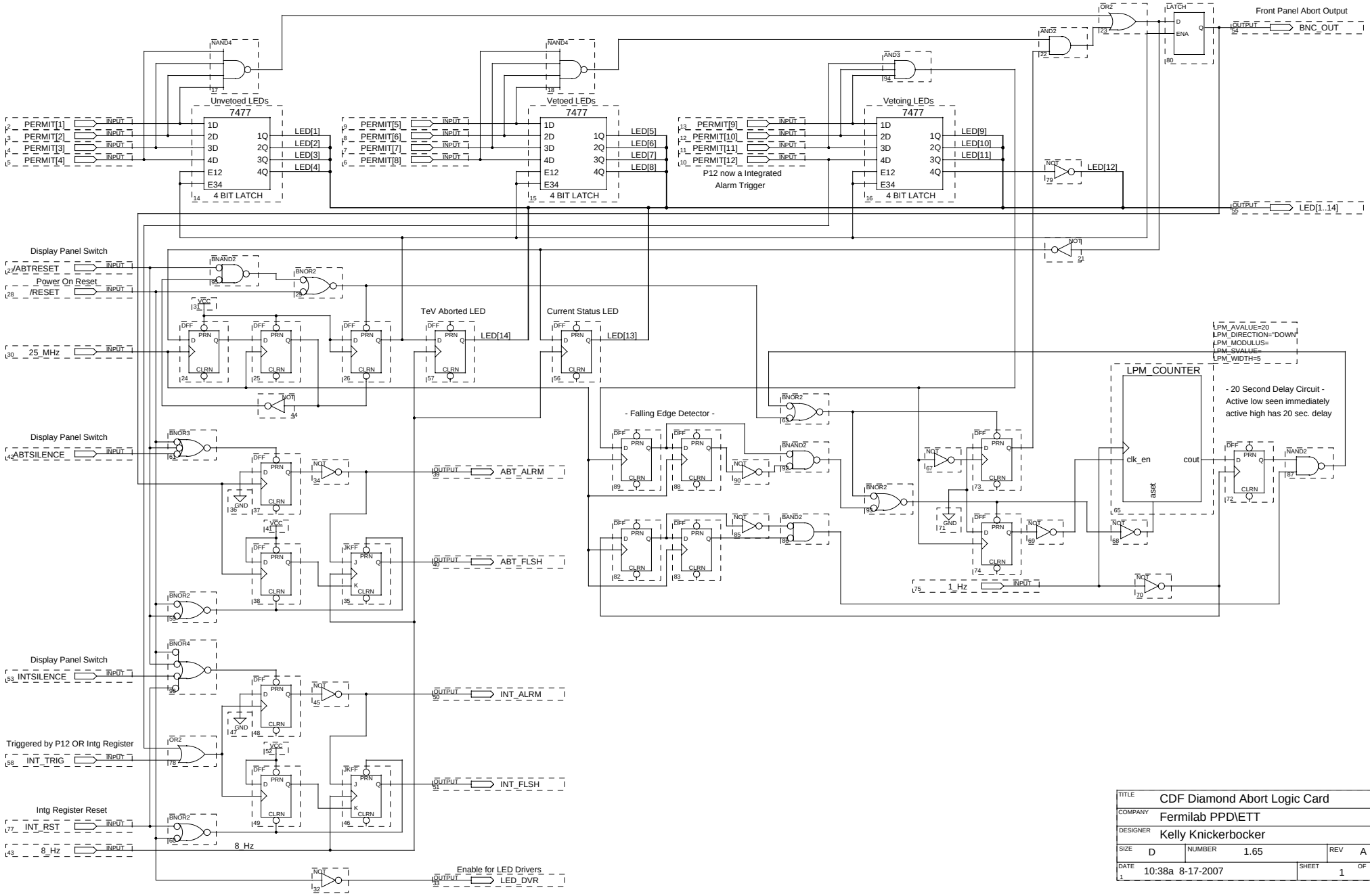

TITLE	CDF Diamond Abort Logic Card		
COMPANY	Fermilab PPD\ETT		
DESIGNER	Kelly Knickerbocker		
SIZE D	NUMBER 1.65		REV A
DATE 10:38a 8-17-2007		SHEET 1	OF 1

```
TITLE "CDF Diamond Abort Logic Card VME Interface";

SUBDESIGN rom_ram
(
    CRDID_SP            : INPUT; % Card ID Address Space is at (XX000000)H %
    ABSTAT_SP           : INPUT; % Status Register Address Space (XX010000)H %
    VM_/DS0, VM_/DS1    : INPUT; % VME Data Strobes %
    VM_/WR, VM_/AS      : INPUT; % VME Write Line, VME Address Strobe %
    VMA[8..1]           : INPUT; % VME Address lines A08-01 %
    VMH[15..9]          : INPUT; % VME Address lines A15-09 %
    ROM_RD              : OUTPUT;
    RAM_WR              : OUTPUT;
    RAM_RD              : OUTPUT;
    RAM_ENA             : OUTPUT;
    WR_ISPEN            : OUTPUT; % Altera JTAG (Address at XX00A002) %
    RD_ISPEN            : OUTPUT;
    WR_JTAG             : OUTPUT; % Altera JTAG (Address at XX00A000) %
    RD_JTAG             : OUTPUT;
    RD_TCST             : OUTPUT;
    LT_TCST             : OUTPUT;
    RD_INTG             : OUTPUT;
    LT_INTG             : OUTPUT;
)
VARIABLE
    ROM_VALD            : NODE; % Valid ROM Card ID Address %
    RAM_VALD            : NODE; % Valid RAM Card ID Address %

BEGIN

% *** Address decode for ID Block ROM (Address from 00-9F) *** %
    ROM_VALD = CRDID_SP & !VM_/AS & (VMH[15..9] == B"0000000")
             & (VMA[8..1] >= B"00000000") & (VMA[8..1] <= B"01001111");

% *** Address decode for Scratch RAM  (Address from A0-DF) *** %
    RAM_VALD = CRDID_SP & !VM_/AS & (VMH[15..9] == B"0000000")
             & (VMA[8..1] >= B"01010000") & (VMA[8..1] <= B"01101111");

    ROM_RD   = ROM_VALD & VM_/WR;

    RAM_WR   = RAM_VALD & !VM_/WR & !VM_/DS0 & !VM_/DS1;

    RAM_RD   = RAM_VALD & VM_/WR;

    RAM_ENA  = RAM_VALD;

% *** Address decode for ISP Enable  (Address at XX00A002) *** %
% *** Address decode for Altera JTAG (Address at XX00A000) *** %
    !WR_ISPEN = CRDID_SP & !VM_/AS & !VM_/WR & !VM_/DS0 & !VM_/DS1
              & (VMH[15..9] == B"1010000") & (VMA[8..1] == B"00000001");

    RD_ISPEN = CRDID_SP & !VM_/AS & VM_/WR & (VMH[15..9] == B"1010000")
             & (VMA[8..1] == B"00000001");

    !WR_JTAG = CRDID_SP & !VM_/AS & !VM_/WR & !VM_/DS0 & !VM_/DS1
             & (VMH[15..9] == B"1010000") & (VMA[8..1] == B"00000000");

    RD_JTAG = CRDID_SP & !VM_/AS & VM_/WR & (VMH[15..9] == B"1010000")
            & (VMA[8..1] == B"00000000");

% *** Address decode for VME Abort Status Register (Address at XX010000) *** %
    !RD_TCST = ABSTAT_SP & !VM_/AS & VM_/WR & (VMH[15..9] == B"0000000")
             & (VMA[8..1] == B"00000000");

    !LT_TCST = ABSTAT_SP & !VM_/AS & (VMH[15..9] == B"0000000")
             & (VMA[8..1] == B"00000000");

% *** Address decode for VME Integrated Abort Register (Address at XX010002) *** %
    !RD_INTG = ABSTAT_SP & !VM_/AS & VM_/WR & (VMH[15..9] == B"0000000")
```

```
            & (VMA[8..1] == B"00000001");

     LT_INTG = ABSTAT_SP & !VM_/AS & !VM_/WR & !VM_/DS0 & !VM_/DS1
            & (VMH[15..9] == B"0000000") & (VMA[8..1] == B"00000001");

END;
```

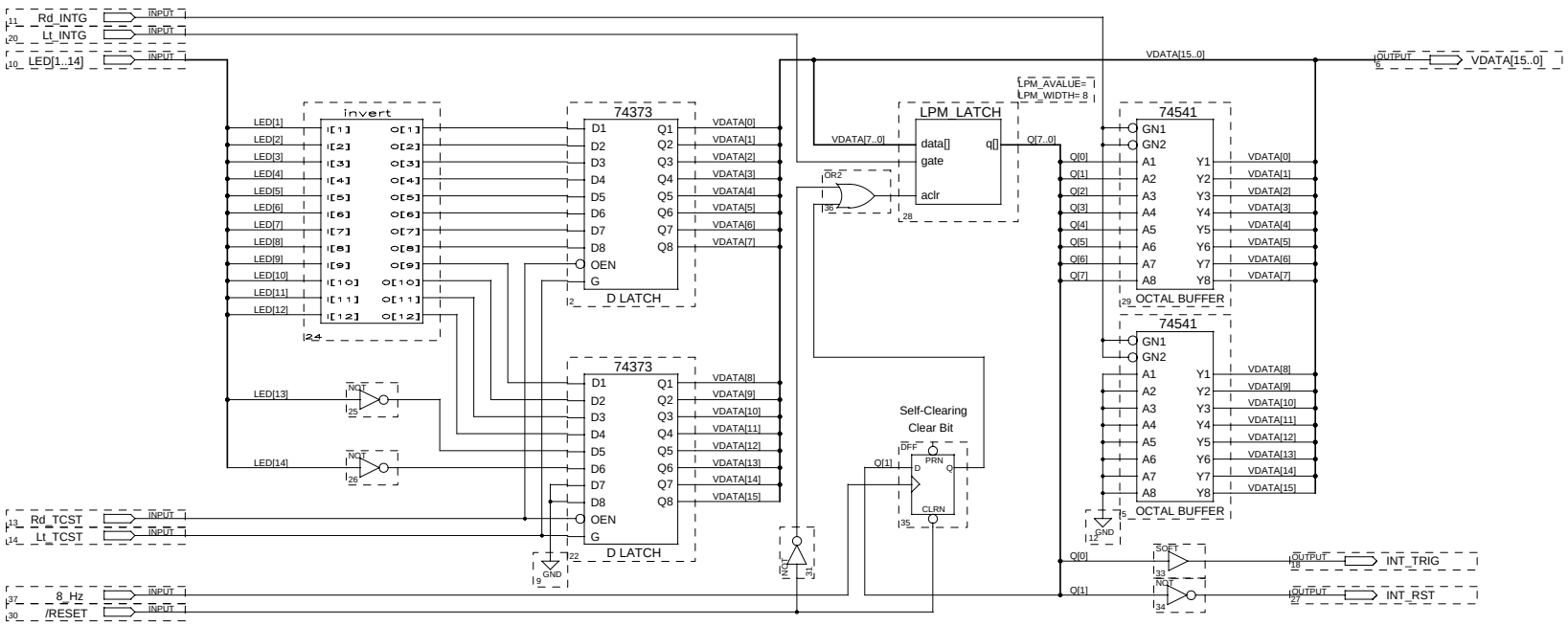

TITLE	CDF Abort Logic Card - Status Register		
COMPANY	Fermilab PPD\EED		
DESIGNER	Kelly Knickerbocker		
SIZE D	NUMBER 1.15		REV A
DATE 1:44p 8-15-2007		SHEET 1	OF 1

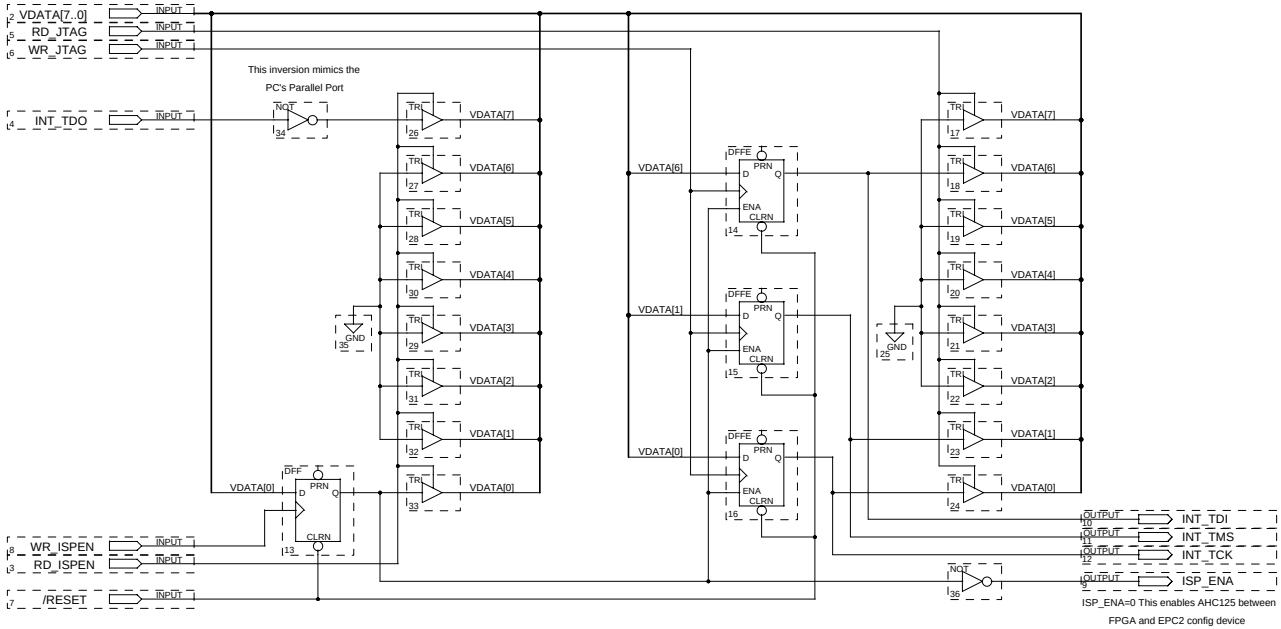

TITLE	CDF Abort Logic Card - Altera JTAG Interface		
COMPANY	Fermilab PPD\EED		
DESIGNER	Kelly Knickerbocker		
SIZE D	NUMBER 1.25		REV A
DATE 1:45p 8-15-2007		SHEET 1	OF 1