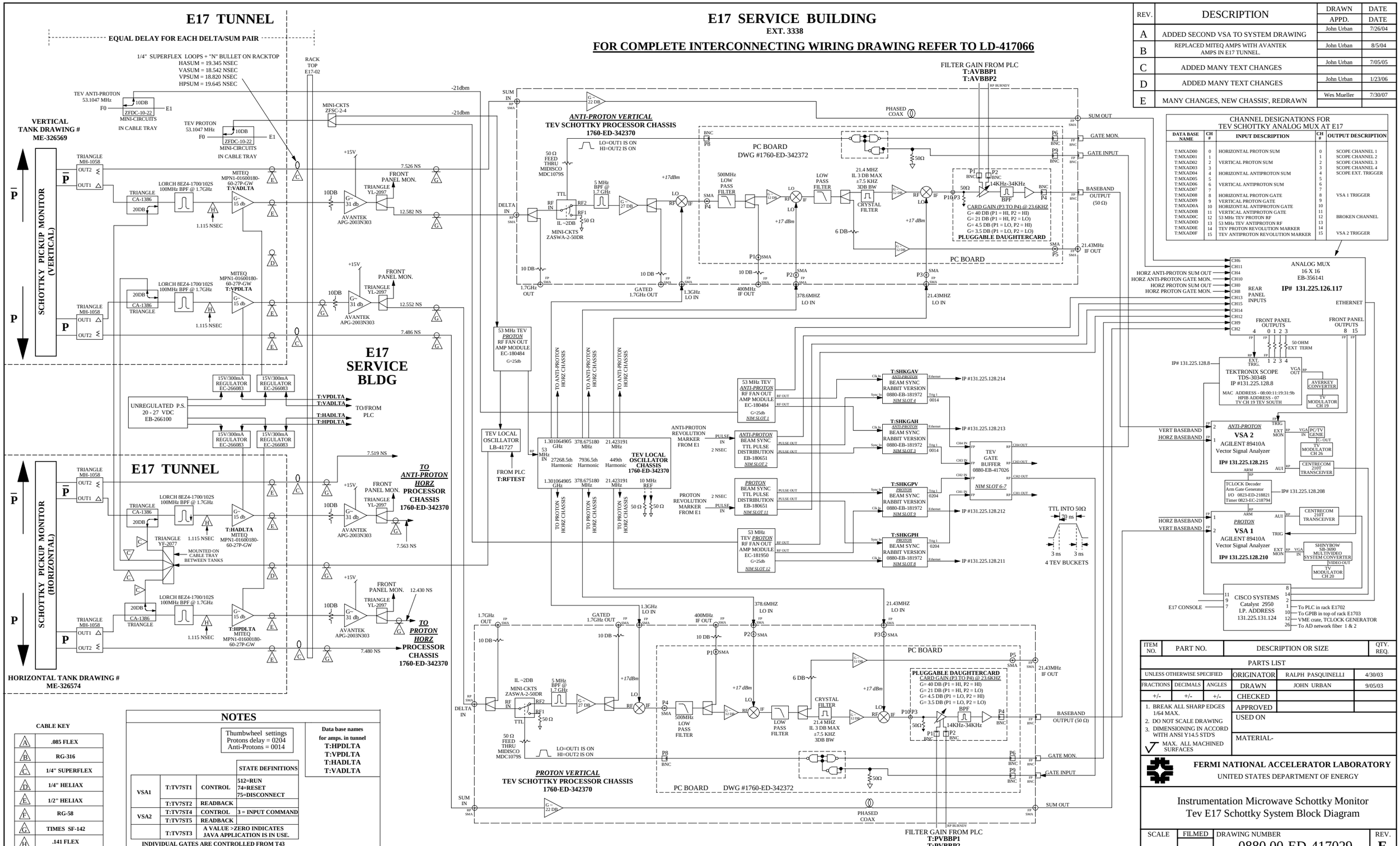REV.	DESCRIPTION	DRAWN / APPD.	DATE
A	ADDED SECOND VSA TO SYSTEM DRAWING	John Urban	7/26/04
B	REPLACED MITEQ AMPS WITH AVANTEK AMPS IN E17 TUNNEL.	John Urban	8/5/04
C	ADDED MANY TEXT CHANGES	John Urban	7/05/05
D	ADDED MANY TEXT CHANGES	John Urban	1/23/06
E	MANY CHANGES, NEW CHASSIS', REDRAWN	Wes Mueller	7/30/07