REV.	DESCRIPTION	DRAWN	DATE
		APPD.	DATE
A	PROCESSOR CHASSIS' INSTALLED, EMITTANCE & DOWNCONVERTER CHASSIS' REMOVED, REDRAWN	WES MUELLER	8/2/07
B			
C			

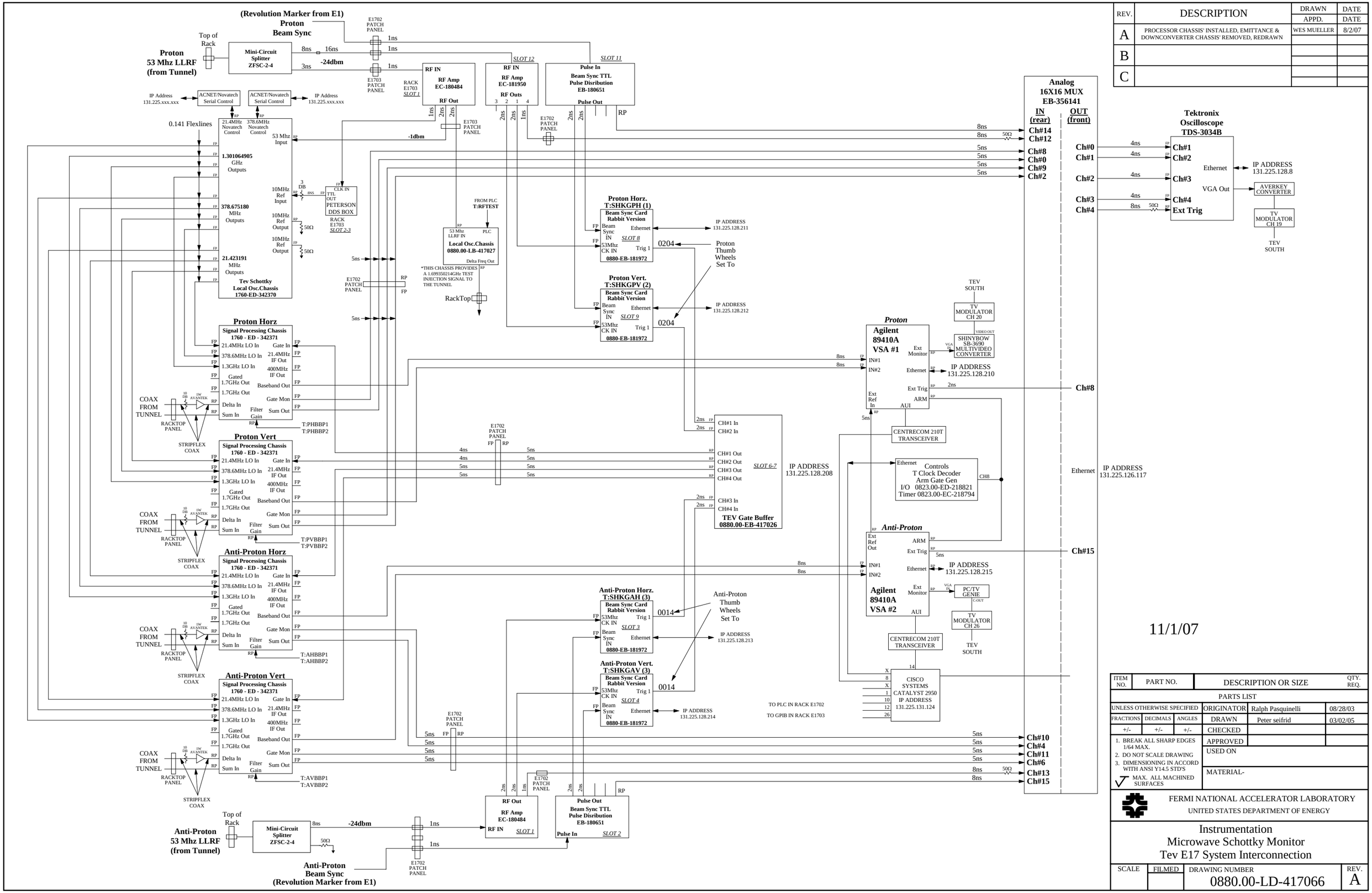

ITEM NO.	PART NO.	DESCRIPTION OR SIZE	QTY. REQ.
		PARTS LIST	

UNLESS OTHERWISE SPECIFIED			ORIGINATOR	Ralph Pasquinelli	08/28/03
FRACTIONS	DECIMALS	ANGLES	DRAWN	Peter seifrid	03/02/05
+/-	+/-	+/-	CHECKED		
			APPROVED		

1. BREAK ALL SHARP EDGES 1/64 MAX.
2. DO NOT SCALE DRAWING
3. DIMENSIONING IN ACCORD WITH ANSI Y14.5 STD'S

√ MAX. ALL MACHINED SURFACES

USED ON

MATERIAL-

FERMI NATIONAL ACCELERATOR LABORATORY
UNITED STATES DEPARTMENT OF ENERGY

Instrumentation
Microwave Schottky Monitor
Tev E17 System Interconnection

SCALE	FILMED	DRAWING NUMBER	REV.
		0880.00-LD-417066	A