Fermilab

Cryogenics for Warm Physicists and Engineers

Tom Peterson, Fermilab

29 May 2008

Old science but still challenging

- Helium cryogenics is based in old technology (much is 19th century) but is still "state of the art" in terms of practical engineering issues
  - **I.e., it seems easy but there is usually some trouble**

James Dewar (invented vacuum flask in 1892)

TIME 100: The 100 Worst Ideas wysiwyg://58/http://www.time.com/time/time100/worstideas.htm

Welcome! Netscape Mail Calendar IM Download Search More from N

TIME.com TIME Media Kit Artificial Intelligence

Leaders & Revolutionaries | Artists & Entertainers | Builders & Titans | Scientists & Thinkers | Heroes & Icons | Person of the Century

TIME 100 POLLS
The 100
Person of the Century
Event of the Century
Phonies and Frauds
100 Worst Ideas

TIME 100 Game: Place the Face
1900 Vs. Now
Online Discussion
Bulletin Boards
Test Your Knowledge

TIME 100 Home
TIME.com Home
TIME 100 Bookstore

The 100 Worst Ideas of the Century

As a planet, we have celebrated almost every aspect of the 20th century. But let's face it, it wasn't all good. The past 100 years have seen plenty of dud inventions, foolish decisions and hugely embarrassing mistakes. Here's a list, not in any particular order, of 100 really bad calls. Wonderful thing, hindsight.

The Person of the Century poll is now closed. The ranking below reflects the status of nominees as of January 19, 2000, the last day of voting.

8.12% Prohibition
0.61% Suntans
1.42% Michael Jackson's Marriage to Lisa Marie Presley
0.26% Leisure suits
0.68% New Math
0.75% The Blacklist
0.06% Comeback Tours
0.44% Asbestos
4.22% The Designated-Hitter Rule
1.07% Barney
0.35% Crystal Pepsi
1.06% New Coke
0.14% Woody Allen, Paterfamilias
3.00% DDT
0.59% Sailing the Exxon Valdez into Prince William Sound
0.07% The Eight-Track Tape
0.09% Cryogenics
1.33% The Treaty of Versailles
0.18% Smell-O-Vision
0.75% Chain E-Mail
0.24% Hydrogen-Filled Blimps
0.36% Staffing the White House with Interns During the Government Shutdown
6.63% "Mr. Simpson, Step Forward and Try on the Glove"
0.21% Rocky 5
0.23% Aerosol Cheese
0.29% Flowbee
0.89% Attacking Israel on Yom Kippur
0.05% AfterMASH
0.10% Shoe-Store X Rays
7.82% Geraldo's Opening of Capone's Vault
0.28% The Independent-Counsel Statute
1.08% Psychic Hotlines
0.19% Cold Fusion
0.41% The Maginot Line
0.19% George Lazenby As James Bond
0.49% The Hitler Diaries
0.20% Tie-Breaker Shoot-outs in Soccer's World Cup
0.20% Daryl Hall's
1.63% Dalkon Shield
3.41% Driftnet Fishing
1.57% The Red Sox's Selling Babe Ruth to the Yankees
2.03% Personal Watercraft
3.04% Watches That Beep
7.67% Telemarketing
0.06% Vinyl Siding
0.14% Gone With the Wind Sequels
0.03% Prestige Area Codes
0.13% The Stiletto Heel
0.20% Astroturf
0.41% Laugh Tracks
0.10% MacArthur's Defying Truman
0.29% Strip Malls
0.33% Michael Jordan, Outfielder
0.07% IBM's PC Junior
0.04% Swine-Flu Vaccine
0.48% The U.S. Metric Campaign
0.06% Ponzi Schemes
0.07% Ishtar

No wonder it always gives me so much trouble — just a bad idea.

0.59% Sailing the Exxon Valdez into Prince William Sound
0.07% The Eight-Track Tape
0.09% Cryogenics
1.33% The Treaty of Versailles
0.18% Smell-O-Vision
0.75% Chain E-Mail
0.24% Hydrogen-Filled Blimps
0.36% Staffing the White
Independent-Counsel Statute
1.08% Psychic Hotlines
0.19% Cold Fusion
0.41% The Maginot Line
0.19% George Lazenby As James Bond
0.49% The Hitler Diaries
0.20% Tie-Breaker
0.20% Astroturf
0.41% Laugh Tracks
0.10% MacArthur's Defying Truman
0.29% Strip Malls
0.33% Michael Jordan, Outfielder
0.07% IBM's PC Junior
0.04% Swine-Flu Vaccine
0.48% The U.S. Metric Campaign

Fermilab

An apology and warning: At the turn of the century, Time Magazine declared cryogenics one of "The 100 Worst Ideas of the Century".

Outline

- Principles of cryogenic refrigeration -- generating the cold helium
- Modes of heat transport -- removing the heat from the cooled device
- A selection of design issues and standard practices in cryogenic engineering which experience tells me are important
  - A project physicist or project manager might find it useful to have some familiarity with these ideas
  - Or, . . . these were just interesting
- Safety and compliance issues

Principles of cryogenic refrigeration -- generating the cold helium

A typical modern helium cycle

(simplified, from Linde Kryotechnik, AG)

- The "Claude process", shown to the right, includes intermediate temperature expanders
- Modern cryoplants follow this pattern
- Major refrigerator components are
  - Compressor(s)
  - Expander(s)
  - Heat exchangers
  - Control valves
- The large, vacuum jacketed container for the heat exchangers is called the "cold box"

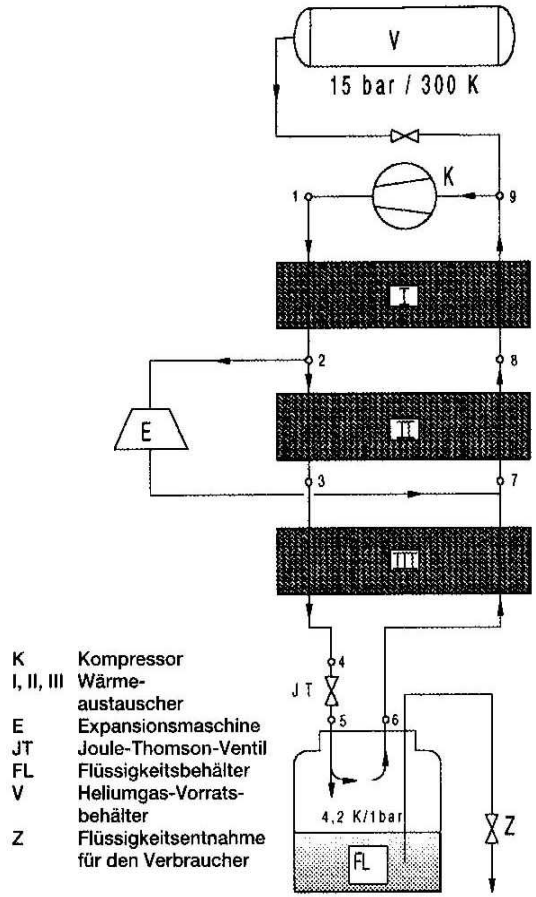

Compressor losses

from B. Ziegler, "Second Law Analysis of the Helium Refrigerators for the HERA Proton Magnet Ring," in Advances in Cryogenic Engineering, Vol. 31, Plenum Press, 1986, p. 693

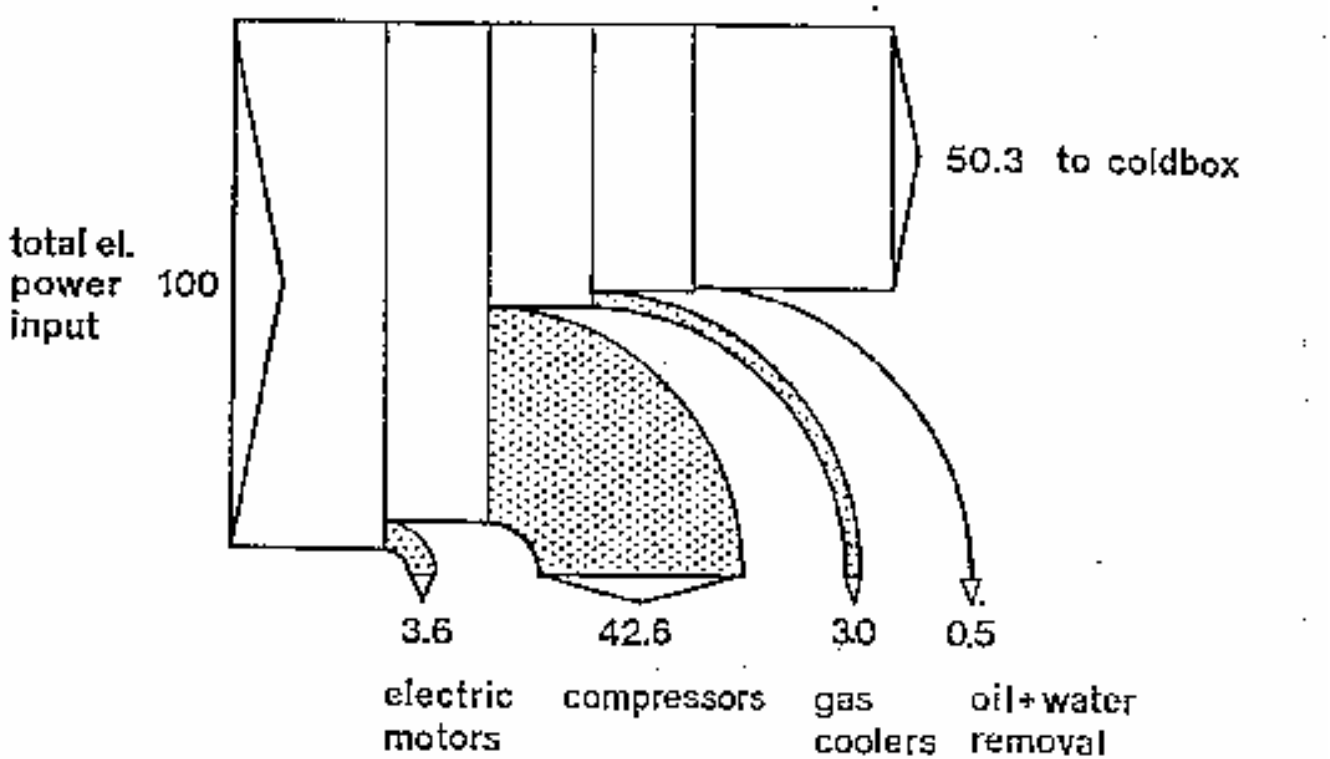

Cold box losses

from B. Ziegler, "Second Law Analysis of the Helium Refrigerators for the HERA Proton Magnet Ring," in Advances in Cryogenic Engineering, Vol. 31, Plenum Press, 1986, p. 693

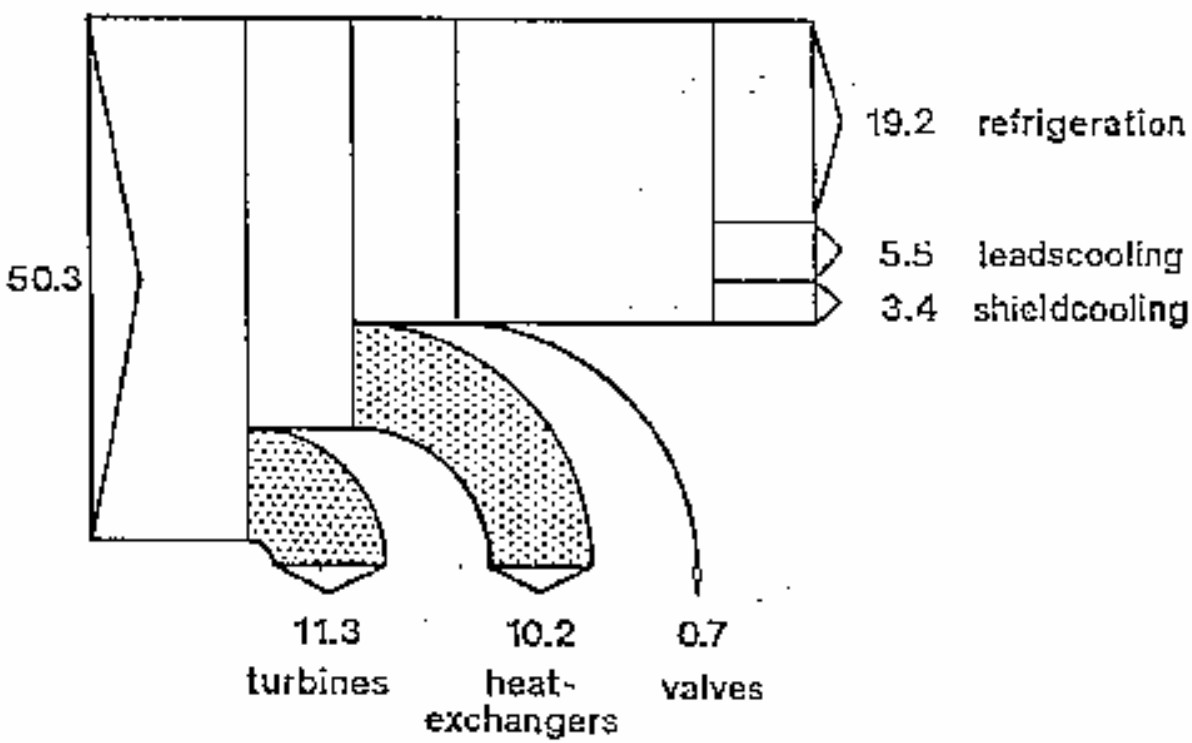

Room-temperature power

	Cryoplant coefficient of performance (W/W)		
	40 K - 80 K	5 K - 8 K	2 K
TESLA TDR:	17	168	588
XFEL:	20	220	870
Industrial est:	16.5	200	700
ILC assumption:	16.4	197.9	703.0

- Above numbers were compiled for the ILC RDR. A good estimate for isothermal cooling would be
  - 250 W/W @ 4.5 K
  - 12 W/W @ 80 K

Getting KW of cooling below 4.2 K

- Helium at 1 atm boils at 4.2 K. For lower temperature need lower pressure.
- A Claude cycle could operate with a subatmospheric compressor inlet pressure
- At high heat loads and low temperature (hence low vapor pressure), volumetric flows become huge, so cold compressors are used to boost pressure before the helium reaches room temperature

Helium cycle with cold compressor

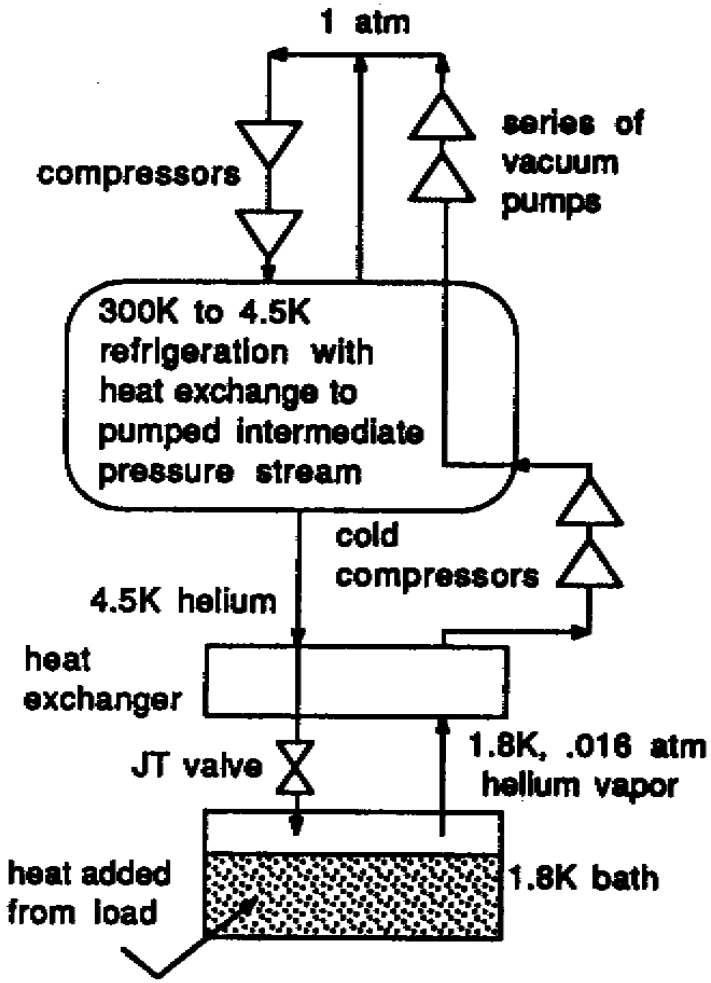

A flow scheme for a cryogenic refrigerator

Expanders are red, compressors are blue, heat exchangers are yellow

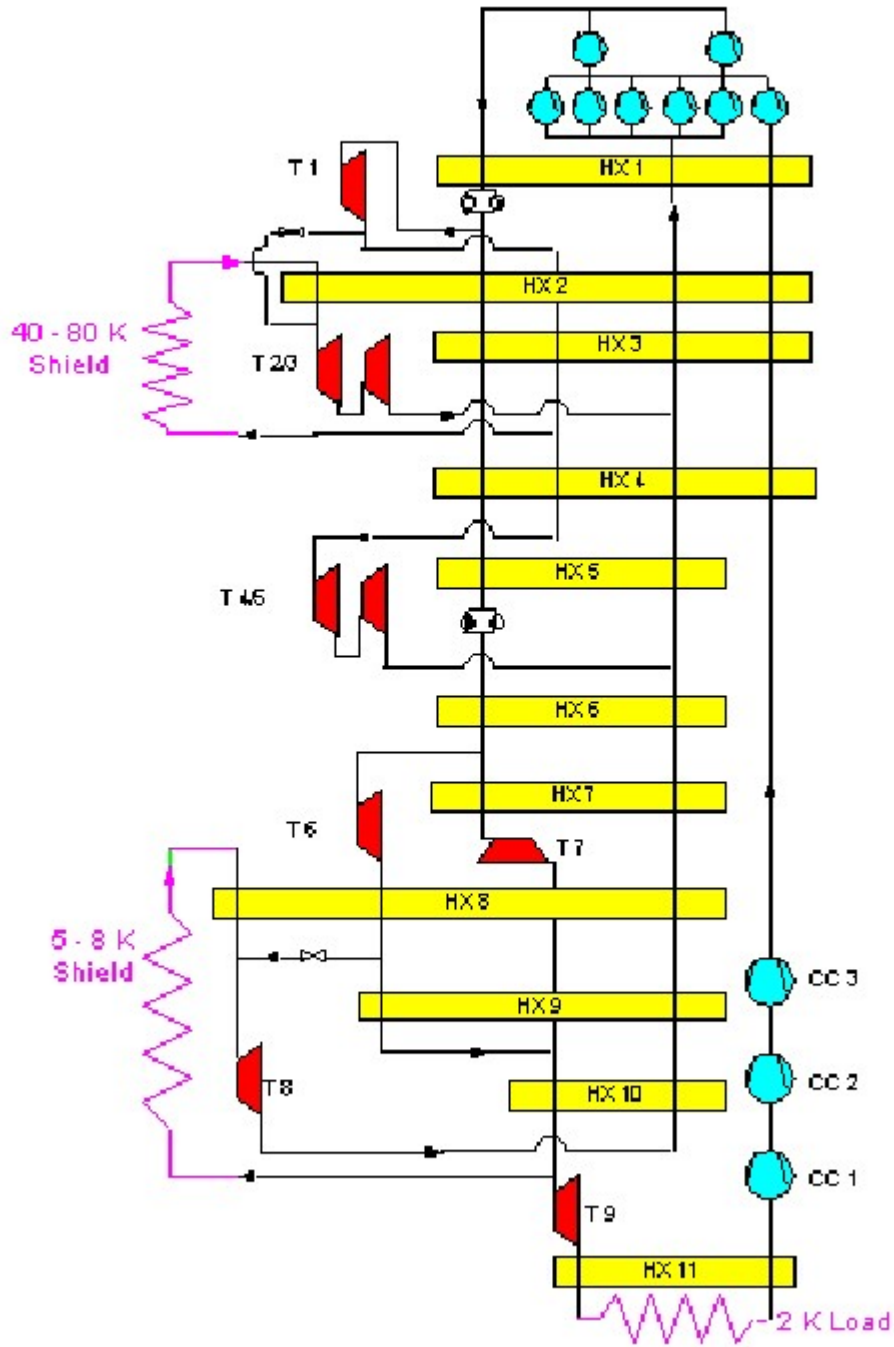

Cooling the magnets and RF cavities

- Physicists and engineers designing an accelerator will be able to specify and buy cryogenic plants, but must design the accelerator components (magnets or RF cavities and their containers)
- Cooling mode, heat transfer, pressure drops, cool-down, warm-up and non-steady or upset system operations all must be considered as part of the component design
- The cooled devices must be viewed as part of the cryogenic system

Modes of heat transport -- removing the heat from the cooled device

Cooling modes in large-scale cryogenic systems recently in operation

- Pool boiling helium I (SRF for HERA, LEP, KEKB)
- Forced flow of subcooled or supercritical helium I (Tevatron, HERA, SSC)
- Stagnant, pressurized helium II (Tore Supra, LHC)
- Saturated helium II (CEBAF, TTF at DESY, SNS at Oak Ridge, and foreseen for ILC)
- This list also illustrates the extent to which superconductivity and cryogenics have become standard technology for accelerators

Helium phase diagram

(S. W. VanSciver, Helium Cryogenics, p. 54)

- Critical point
  - 5.2 K, 2.245 atm
- Lambda transition at 1 atm
  - 2.172 K

- SRF -- HERA, LEP, KEKB
- Magnets -- HERA, Tevatron
- Magnets -- SSC
- Magnets -- Tore Supra, LHC
- SRF -- CEBAF, TTF, SNS, ILC

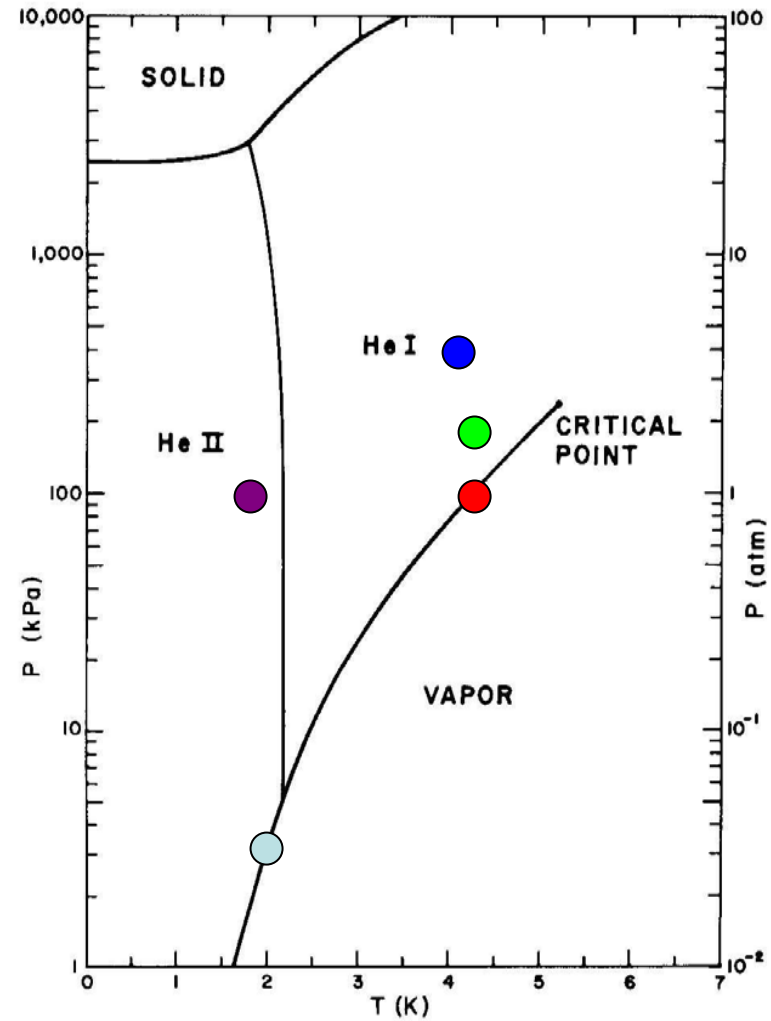

Fig. 3.1. ^{4}He phase diagram.

Pressurized versus pool boiling

- Pressurized helium (normal or superfluid)
  - gives maximum penetration of helium mass in magnet coils, which may be a factor in stability if not also heat transfer
  - but heat flow results in a temperature rise.
- Pool boiling
  - gives pressure stability (important for superconducting RF),
  - provides maximum local heat transfer,
  - and provides nearly isothermal cooling.

Cooling modes -- magnets vs RF

- Accelerator magnets are often cooled with subcooled liquid
  - Typically working near the limit of the superconductor with large stored energy
  - Ensure complete liquid coverage and penetration
- Superconducting RF cavities are generally cooled with a saturated bath
  - Large surface heat transfer in pool boiling for local “hot spots”
  - Very stable pressures, avoid impact of pressure variation on cavity tune

Pool boiling and 2-phase flow

- Considerations for pool boiling systems
  - Control of liquid levels, long time constants, inventory management
  - Forced convection for warm-up and cool-down
- Two-phase flow
  - Liquid and vapor phases separate with any acceptably low pressure drop (Baker Plot does not apply!)
  - Easy to develop “slug” flow due to liquid separation in low places in piping

Cryogenic system string lengths

- "String" here refers to the distance which cryogens flow away from the refrigerator
- Tevatron -- 125 meters
  - 24 refrigerators, 48 strings
- HERA -- 650 meters
  - 3 refrigerators in one location, 4 feed points (via transfer line), 8 octants (strings)
- LHC -- 3300 meters
  - 8 refrigerators, 8 octants (strings)
- So why are the Tevatron strings so short?

Fermilab's magnet cooling scheme

- Rapid cycling machine originally designed for fixed target physics implied warm iron magnets
- Warm iron constrained cryostat and helium channels to small diameter
  - Which resulted in somewhat larger static heat
  - plus high pressure drop
- Two phase helium flow to remove static heat
  - Coil bathed in pressurized liquid which is cooled by 2-phase
- Keeping pressure (hence temperature) low required short string lengths

Fermilab magnet cooling scheme

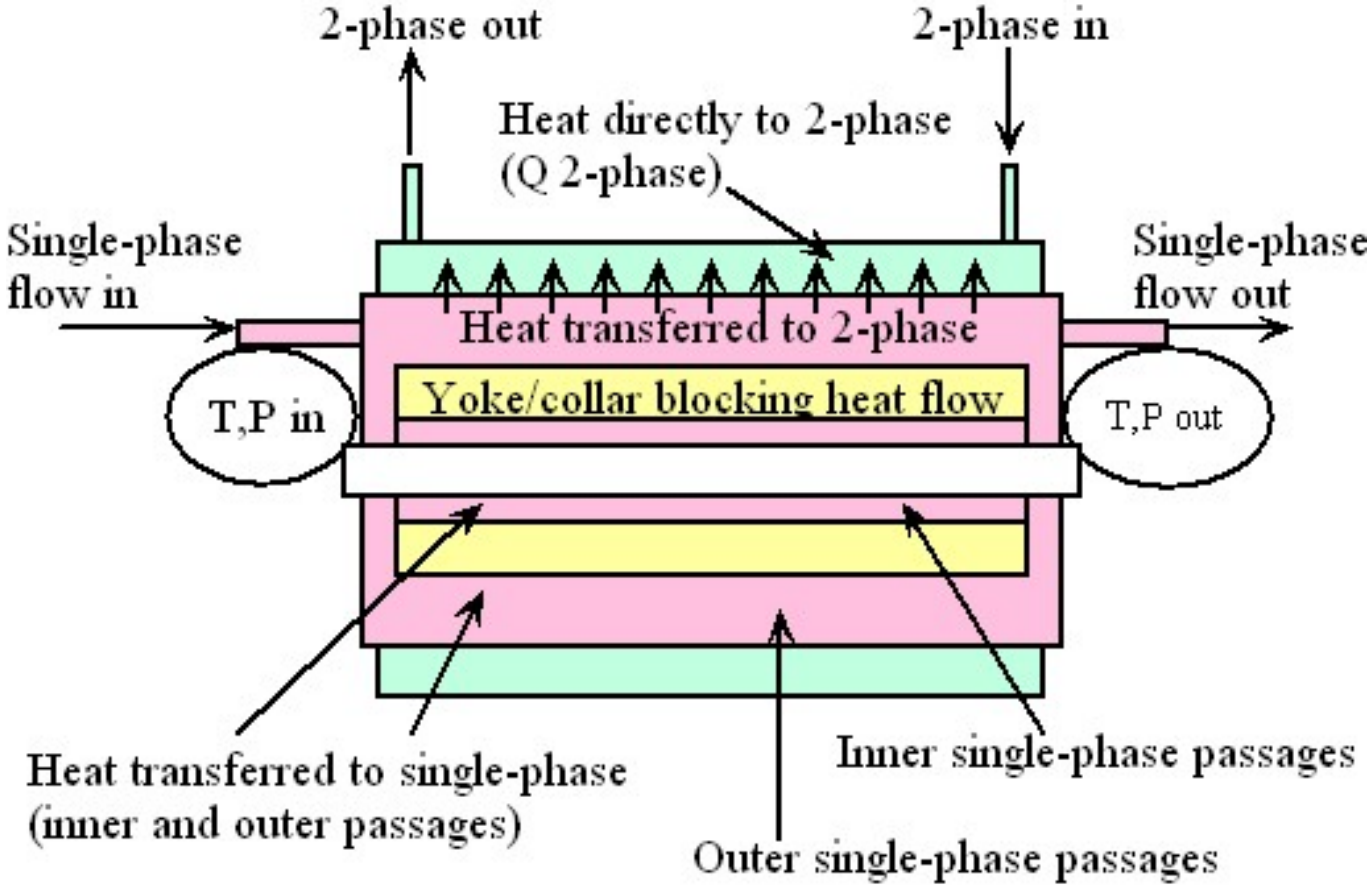

Q visible, measured heat input to the magnet, is based on single phase flow, T, P out andT, P in.

Tevatron dipole cross-section

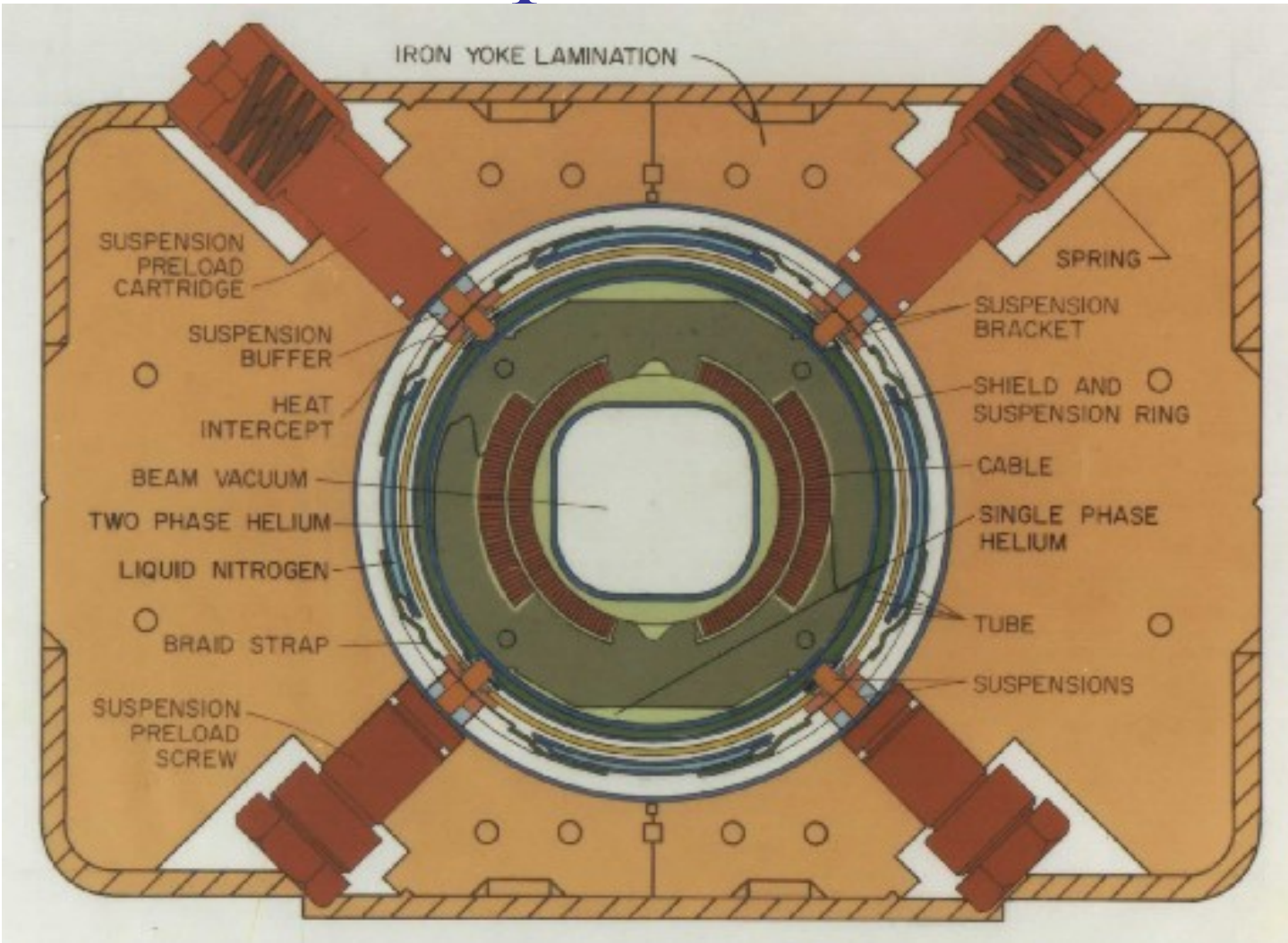

LHC magnet cooling scheme

similar to Tevatron in also being indirect cooling, i.e., helium-to-helium heat transfer in the magnets

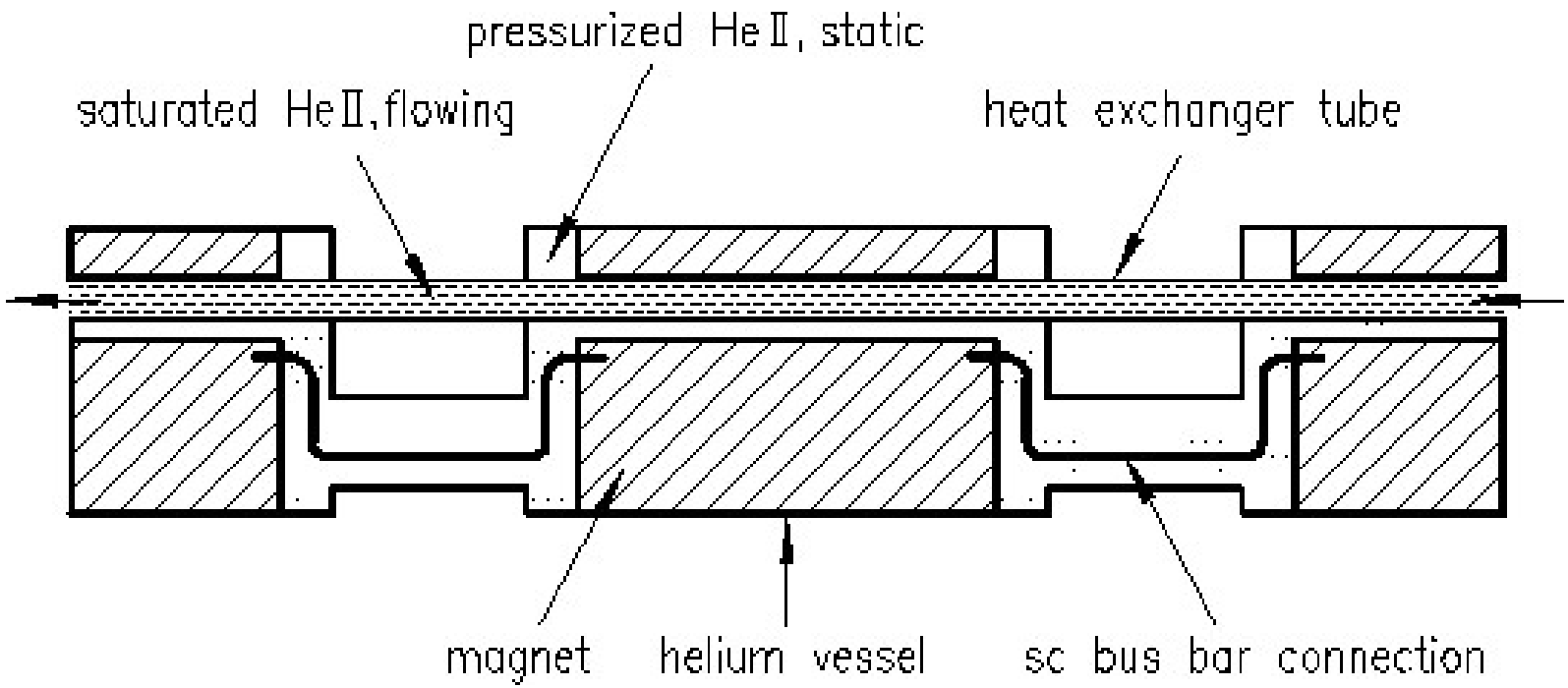

Heat transport through channels--pressurized superfluid

Conduction through ordinary materials is written as $q = k\frac{dT}{dx}$, where q is heat flux, T is temperature, and k is thermal conductivity. Heat transport through the pressurized superfluid with constant cross-section and constant heat flux obeys

$q^m = \frac{1}{f(T)}\frac{dT}{dx}$ where m ≅ 3 and q is the heat flux in W/cm^2.

Superfluid Heat Transport Function

(Steven W. VanSciver, Helium Cryogenics, p. 144)

From 1.85 K to 1.95 K assume $f(T)$ is constant, and $\frac{1}{f(T)} = 1200$. Then the temperature difference through the conduit is $\Delta T = \frac{q^3 L}{1200}$ where L is distance in cm, and q is the heat flux in W/cm^2.

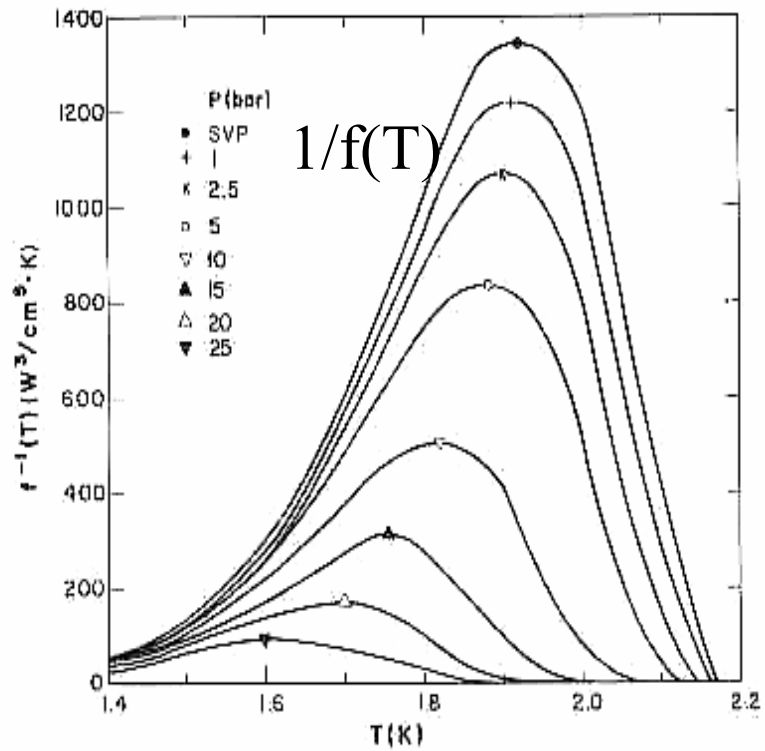

1.6 T(K) 2.0

Comparison of apparent thermal conductivities of superfluid and Cu

Temp in (K)	Temp out (K)	Cond Cu (W/cmK)	Q Cu (W)	Q He (W)
4.0	3.8	60	2.0	0.000006
2.0	1.8	30	1.0	10.1

Calculation is for a 1 foot long, 1 inch diameter cylinder with the above temperatures at each end. Copper is very high purity; room temperature copper is 4 W/cmK.

So a superfluid heat pipe is about 10 times better than a high-purity copper rod at 2 K, and the effective thermal conductivity of superfluid in the 1.8 K to 2.0 K temperature range is about 100 times that of room-temperature copper.

Some Suitable Materials for Low Temperature Use

- Austenitic stainless steels e.g. 304, 304L, 316, 321
- Aluminum alloys e.g. 6061, 6063, 1100
- Copper e.g. OFHC, ETP and phosphorous deoxidized
- Brass
- Fiber reinforced plastics such as G –10 and G –11
- Niobium &Titanium (frequently used in superconducting RF systems)
- Invar (Ni /Fe alloy) useful in making washers due to its lower coefficient of expansion
- Indium (used as an O ring material)
- Kapton and Mylar (used in Multilayer Insulation and as electrical insulation
- Quartz (used in windows)

A selection of design issues and standard practices in cryogenic engineering

Pressure drop in pipe

- The standard, classical formulas work fine for helium gas and liquid
- Helium flow is usually turbulent, but warm helium flow in small channels such as in a current lead may be laminar
- The pipe size constraint is often an off-design consideration such as cool-down or emergency venting

Pressure drop for turbulent flow in a pipe is

$\Delta P = \frac{\rho v^2}{2}\frac{L}{D}f$ where ρ is average fluid density, v is average fluid velocity, L is pipe length, D is pipe inner diameter, and f is friction factor based on diameter.

Substituting $\dot{m} = \rho v\left(\pi \frac{D^2}{4}\right)$ where $\dot{m}$ is mass flow

gives $\Delta P = (0.811)\frac{\dot{m}^2}{\rho D^5}Lf$

Interconnects

- Complicated access since within insulating vacuum, need space to connect flanges, make welds, etc.
- Allowance for thermal contraction
- Mechanical support and stability

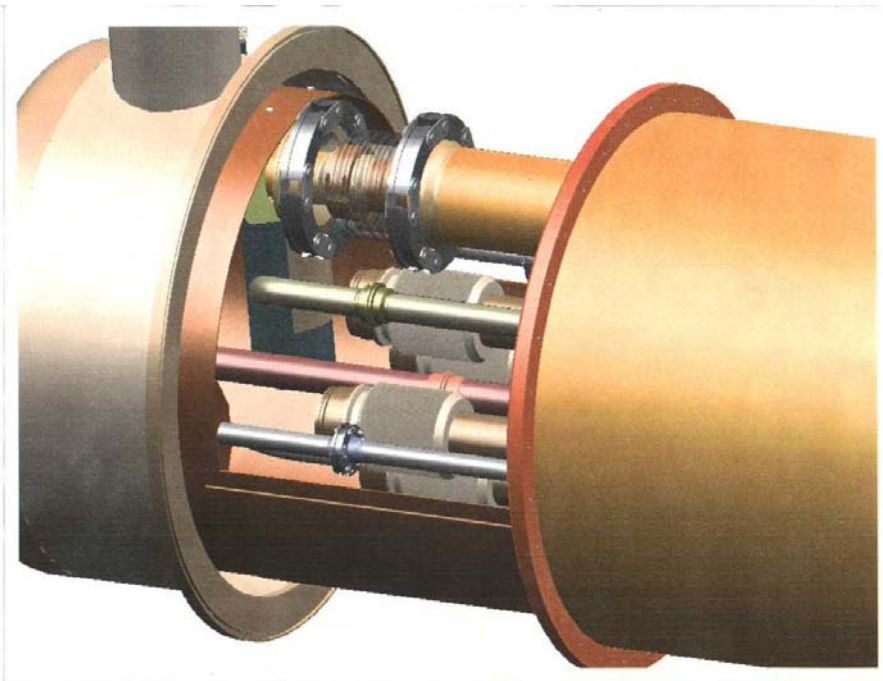

LHC IR Quad Interconnect

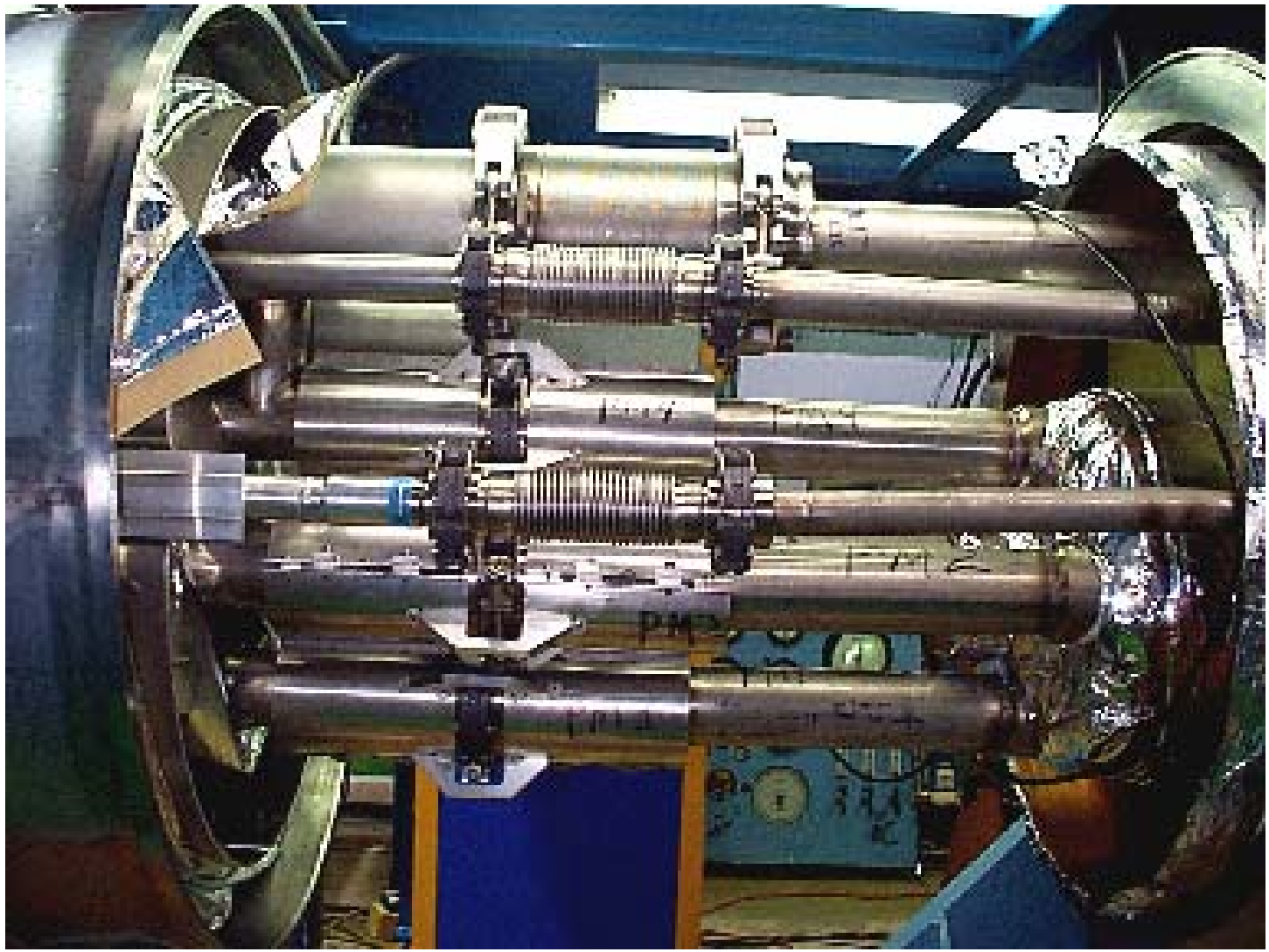

Lateral elastic pipe instability

Lateral elastic pipe instability

- Lateral displacement force is proportional to lateral displacement and to pressure
- If the restoring spring constant of the piping system in which the bellows is installed is less than the constant relating lateral displacement force to lateral displacement (a "negative spring constant") at a given pressure, the system is transversely, elastically unstable at that pressure.
- Relatively light pipe supports near the bellows can prevent this instability by adding stiffness.

Displacement force proportional to displacement

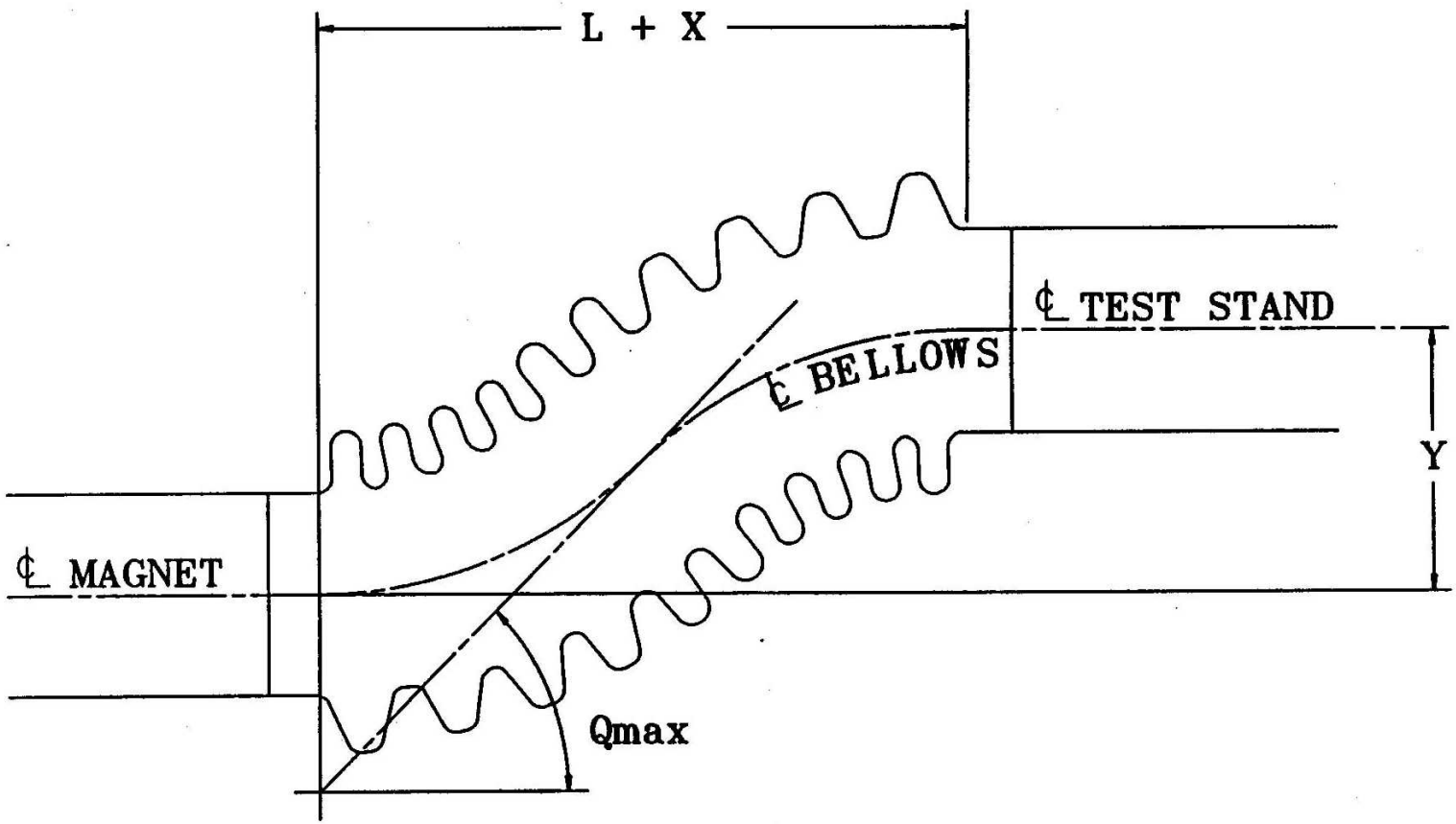

Axial pressure forces

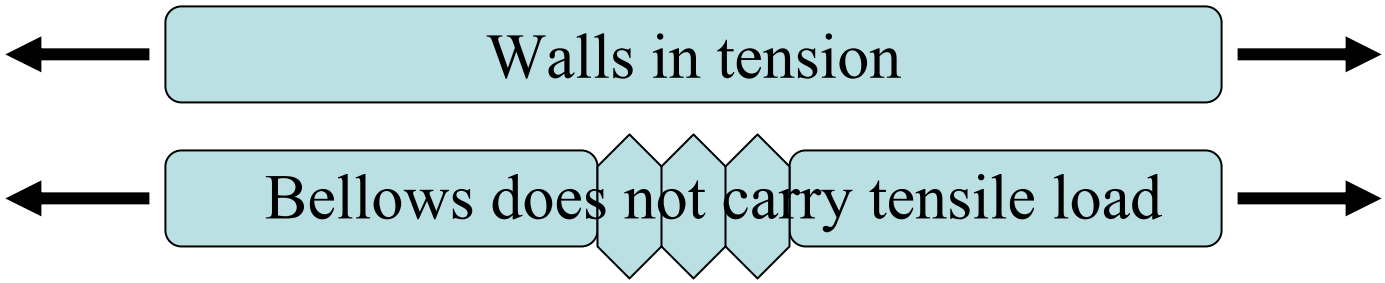

- Pressure-containing pipes and vessels carry tension in their walls due to pressure forces
- Introduction of a bellows or elastic element introduces the possibility of unbalanced forces on the piping
  - Combination of bellows and elbow are often overlooked
- The following slide shows a free body diagram for a helium vessel within a cryogenic supply box for LHC at CERN

Forces on DFBX-E due to 20 bar M1 line pressure plus 3.5 bar in the helium vessel

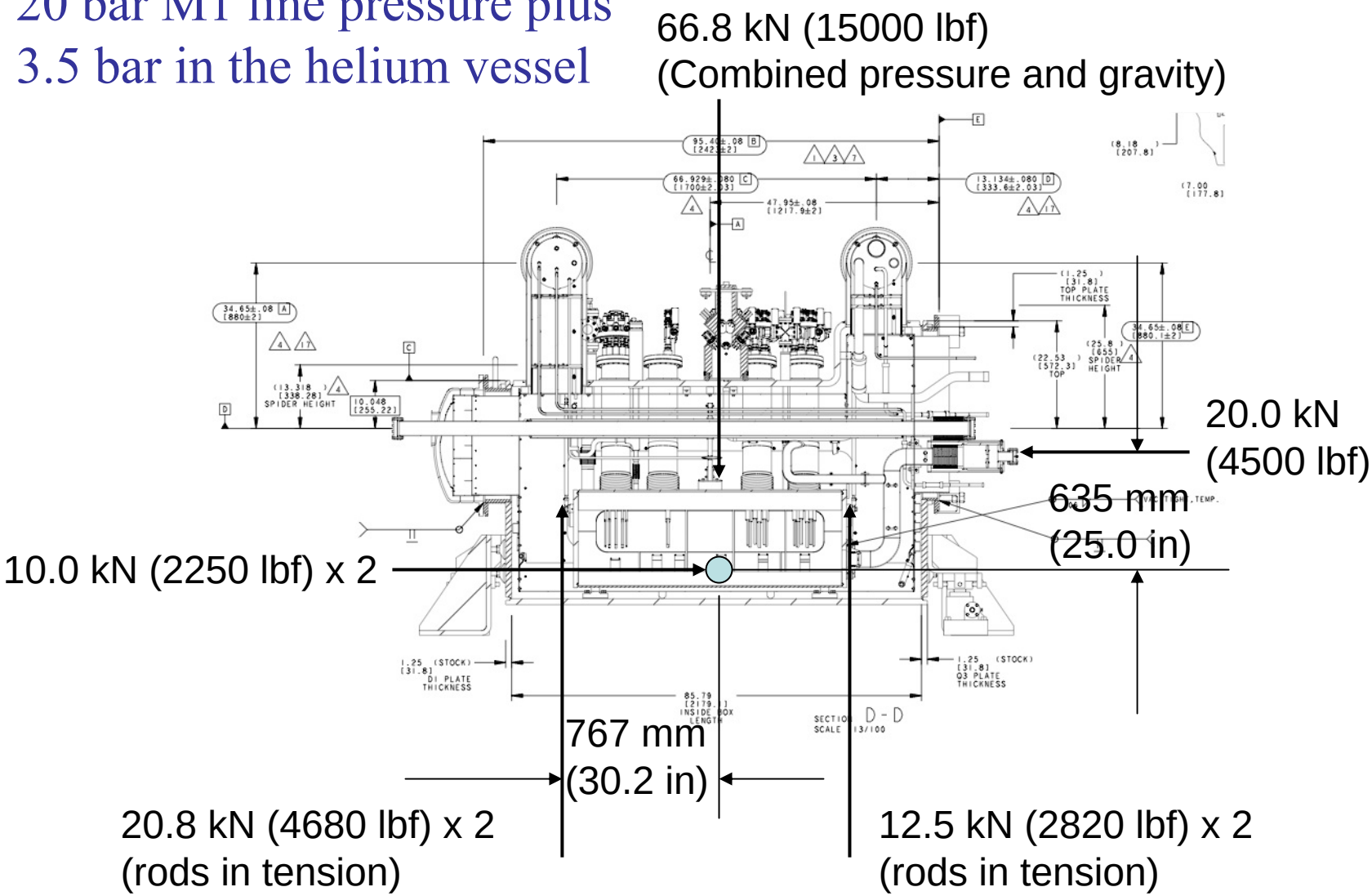

Provisions for cool-down and warm-up

- Cool-down
  - Return vapor may block liquid supply flow in the same channel; a simple fill from the top or one end might not work. A cool-down vent and/or a bottom-fill port may be required.
- Warm-up
  - Flow will stratify. Local electric heat, a bottom vent port, or other feature to force heat down to the lower parts of a cold mass may be required.

Thermal intercepts

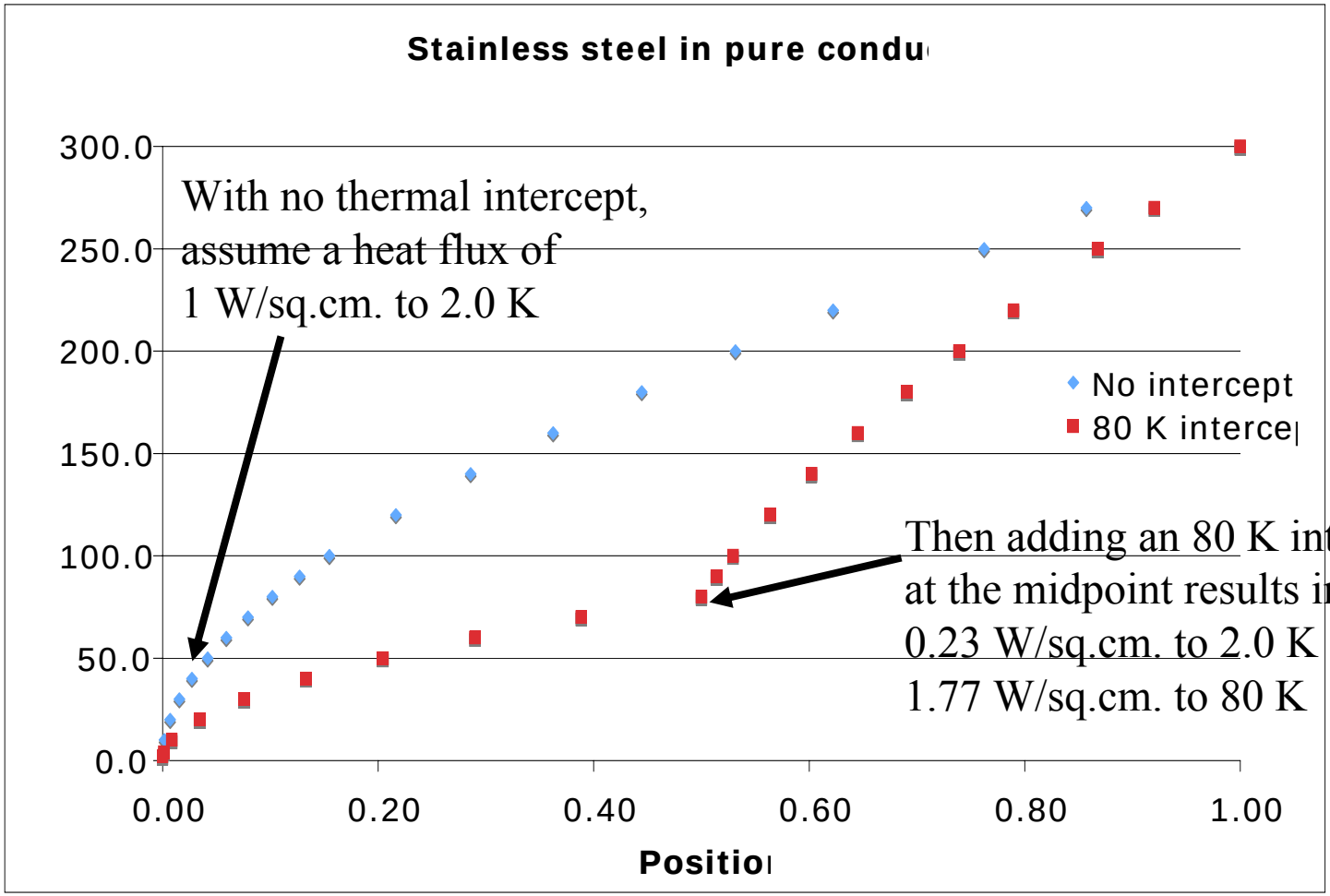

Thermal intercept benefit

- From previous illustration:
  - No thermal intercept:
    - 1 W/sq.cm. to 2 K x 700 W/W = 700 W of room temperature power per sq.cm. of rod between 2 K and 300 K
  - With thermal intercept:
    - 0.23 W/sq.cm. to 2 K x 700 W/W + 1.77 W/sq.cm. to 80 K x 12 W/W = 161 W + 21 W = 182 W of room temperature power per sq.cm. of rod between 2 K and 300 K

Heat capacity

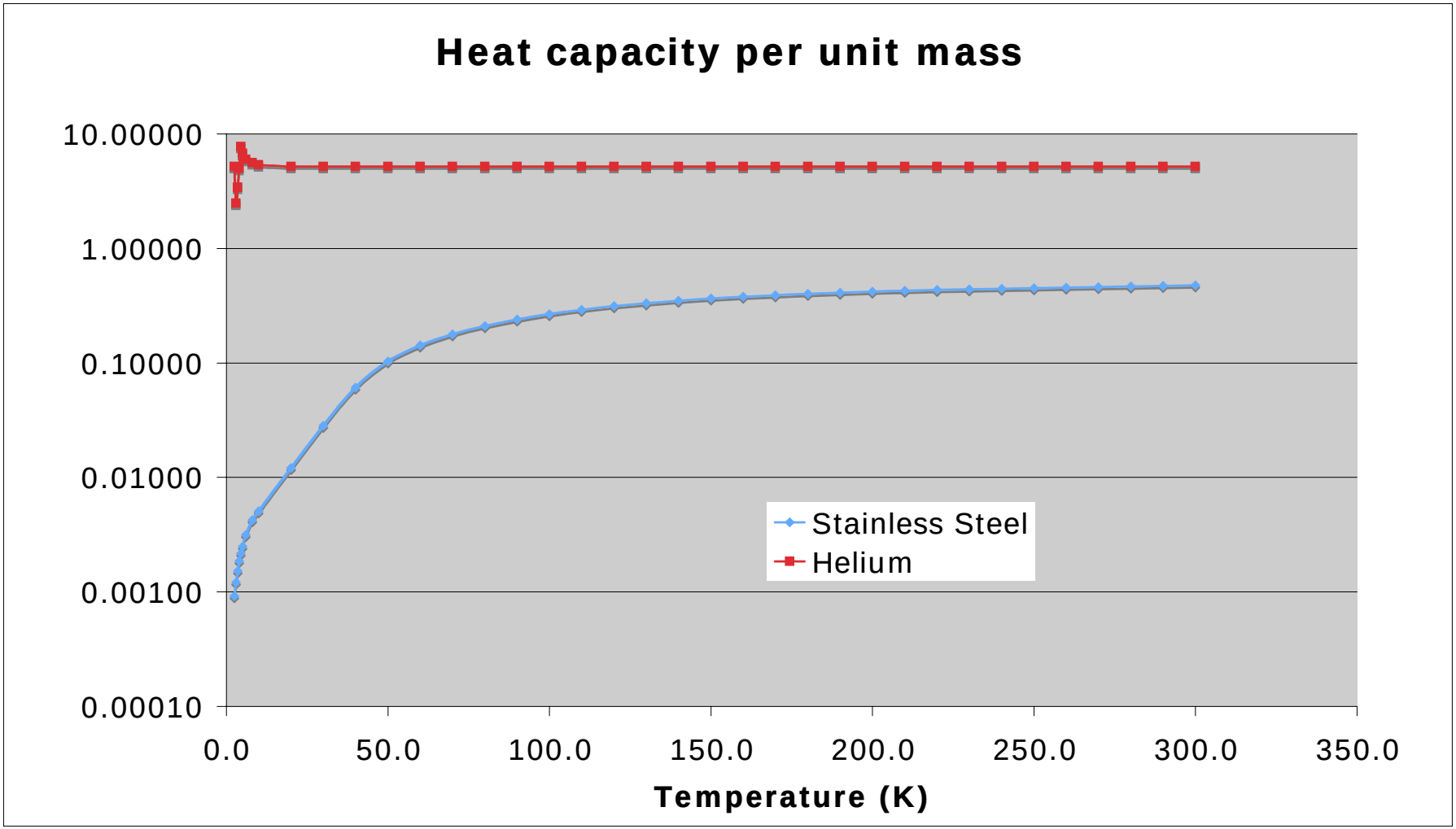

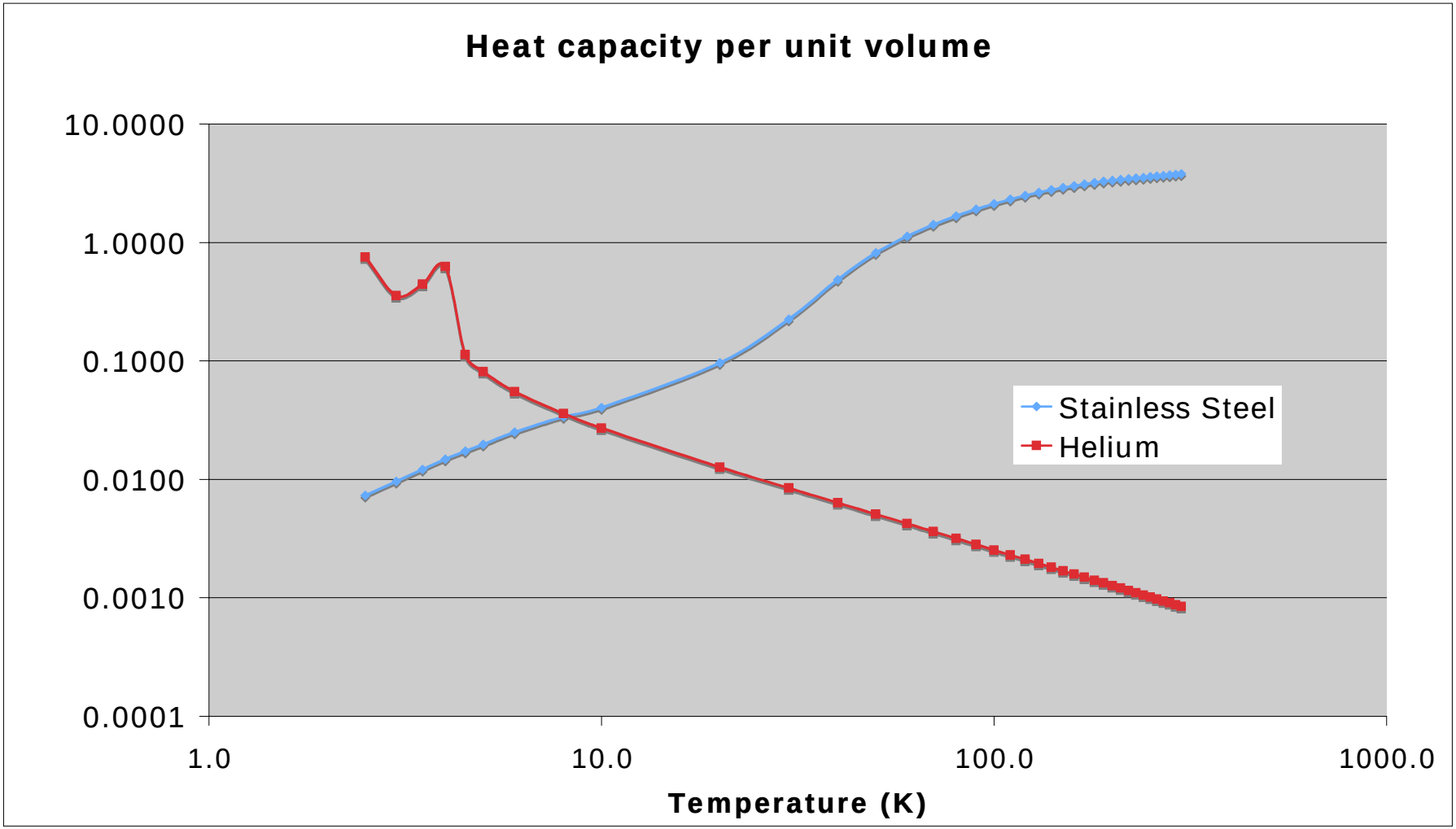
Heat capacity per unit volume
10.0000
1.0000
0.1000
0.0100
0.0010
0.0001
1.0
10.0
100.0
1000.0
Temperature (K)
Stainless Steel
Helium

Thermal contraction

- Amount of contraction decreases with lower temperature
- Most shrinkage complete by 80 K

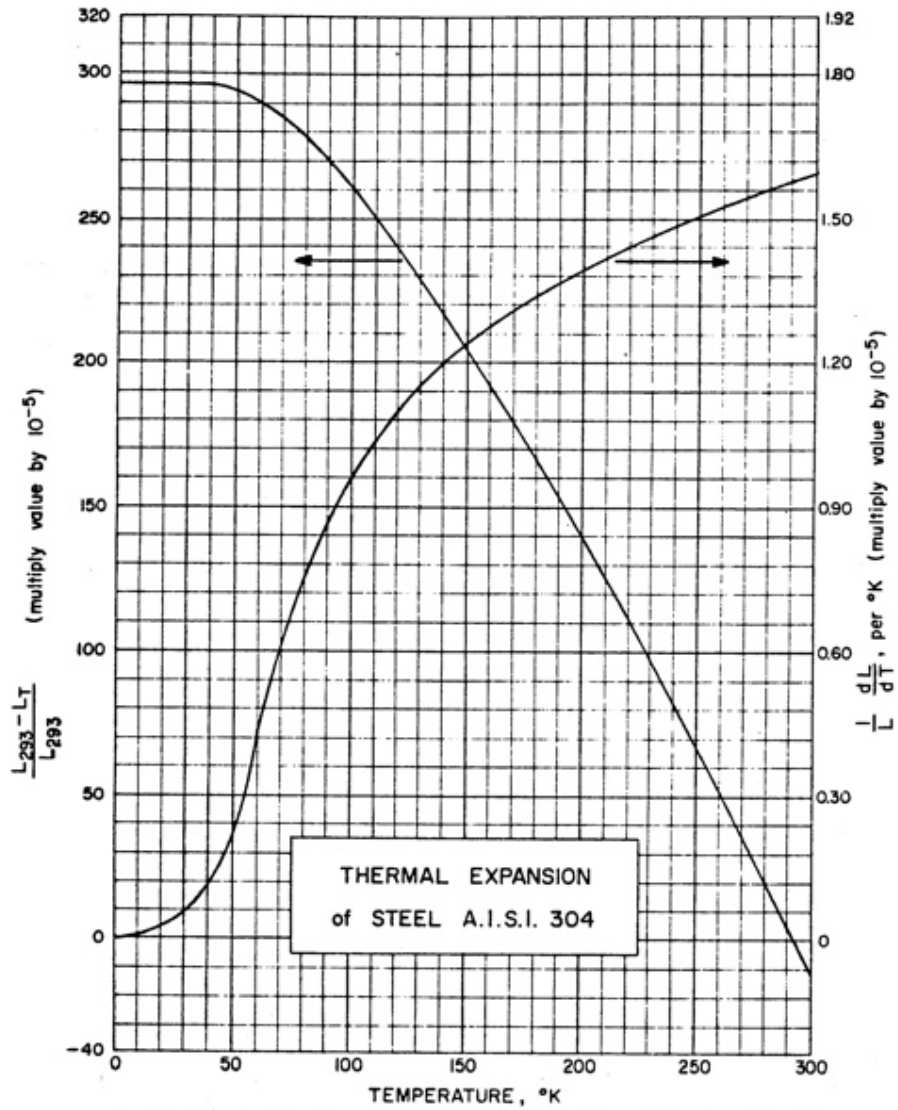

Vacuum barriers

- Separate insulating vacuum into manageable sections
  - Leak checking and trouble-shooting
  - Reduce extent of accidental loss of vacuum
  - Regions for vacuum instrumentation

Vacuum barrier schematic

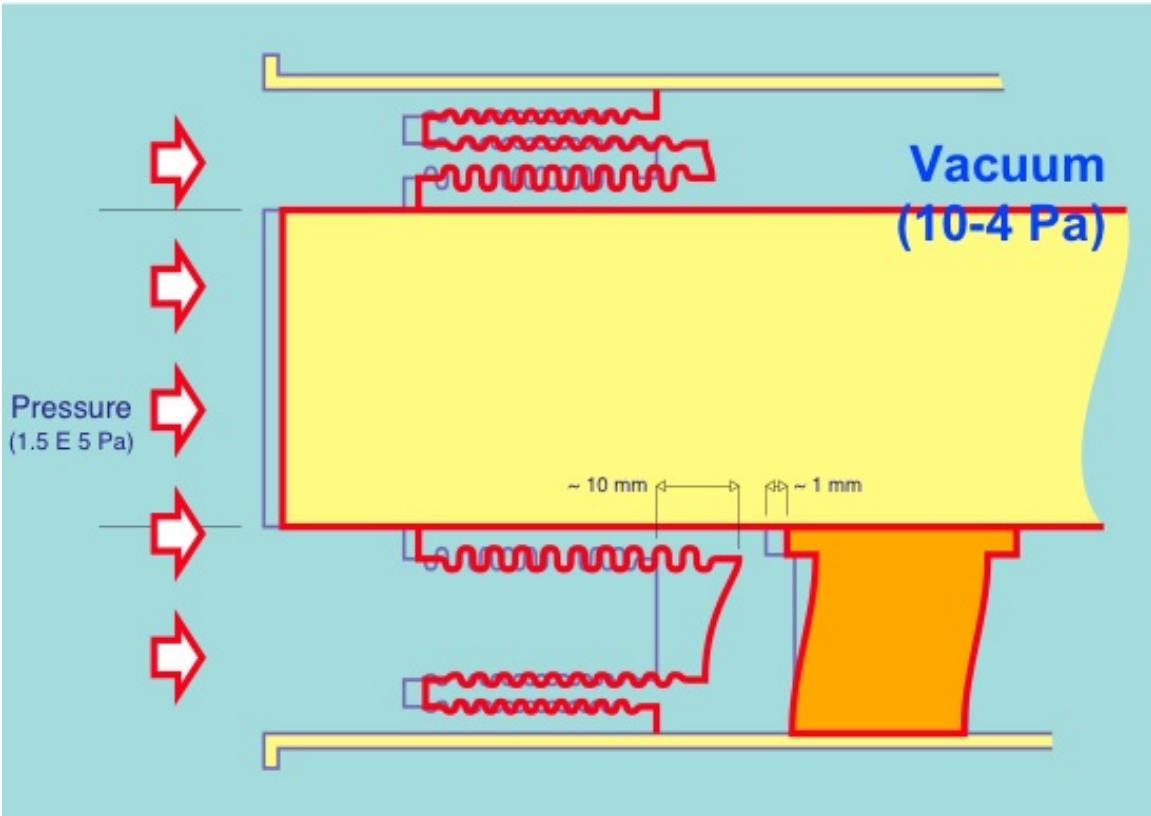

Barriers between superfluid and normal fluid

- A thermal barrier separating normal fluid helium from pressurized superfluid helium may be a “lambda plate”, “lambda plug”, or a check valve
- Fermilab routinely tests magnets in subcooled liquid in the positive pressure vertical dewar

Double-bath insert assembly

- Top plate
- Closed-foam (Rohacel) insulation
- 4.4 K vapor space
- Lambda plate
- Magnet
- Displacer

Lambda plate assembly

- Lambda plate and seal (blue)
- Intermediate support plate
- Copper clad magnet (for cooldown)

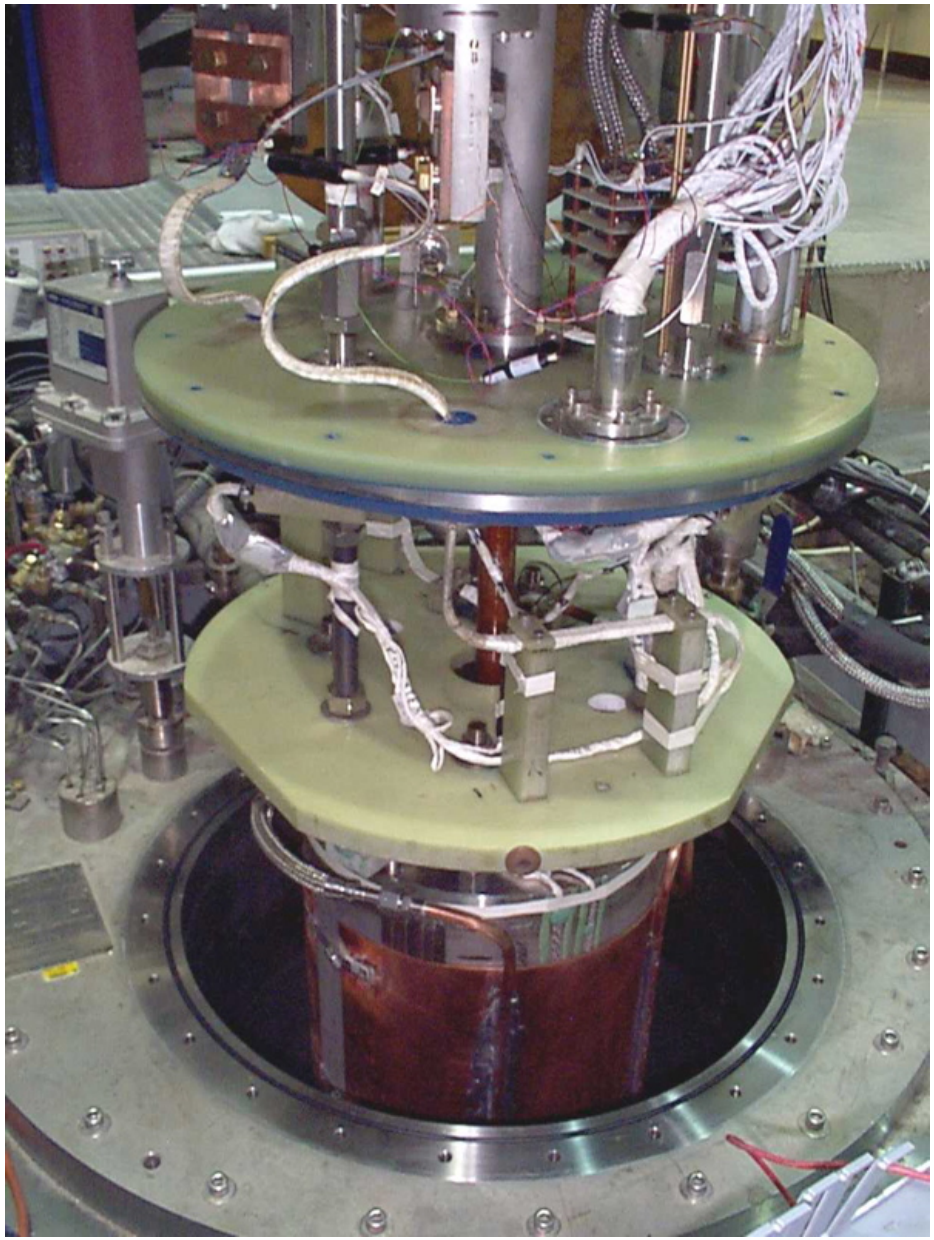

Lambda plate assembly

another view

- Lambda plate and seal (blue)
- Intermediate support plate
- Copper clad magnet (for cooldown)

Lambda plugs

- An end box for pressurized superfluid will need to pass instrumentation and power into the superfluid region
  - Feedthrough via vacuum space, directly to SF volume
    - Risk of helium to vacuum leak
  - → Feedthrough via 4.5 K helium space to superfluid space
    - Must limit heat transfer from 4.5 K to 2 K
    - This is sometimes called a “lambda plug”
    - Typically required for current leads
    - LHC has many
- Failure results in a heat load to 2 K level

Simplified LHC magnet cooling scheme

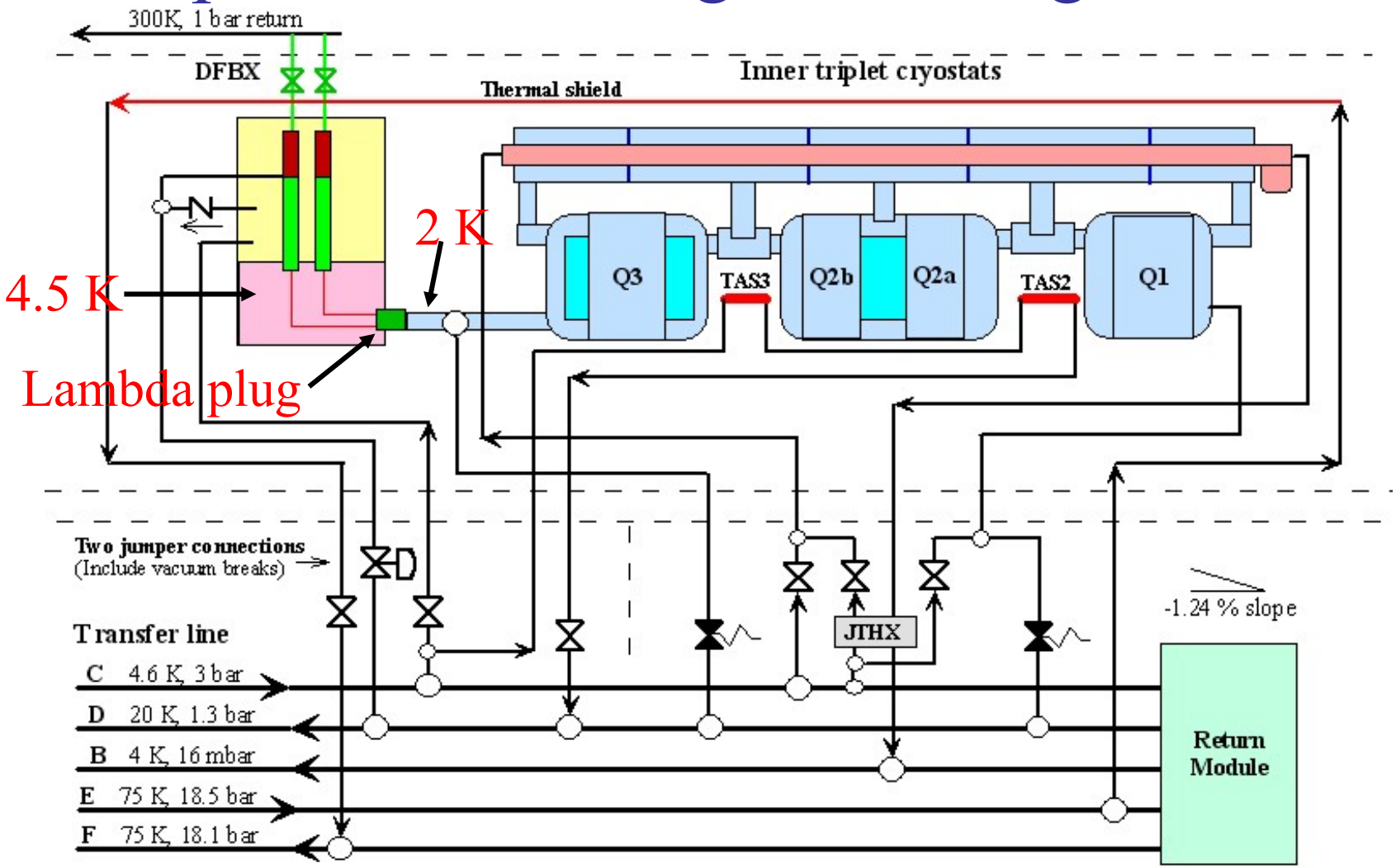

Lambda plug installed

View of lambda plug from 4.5 K helium vessel

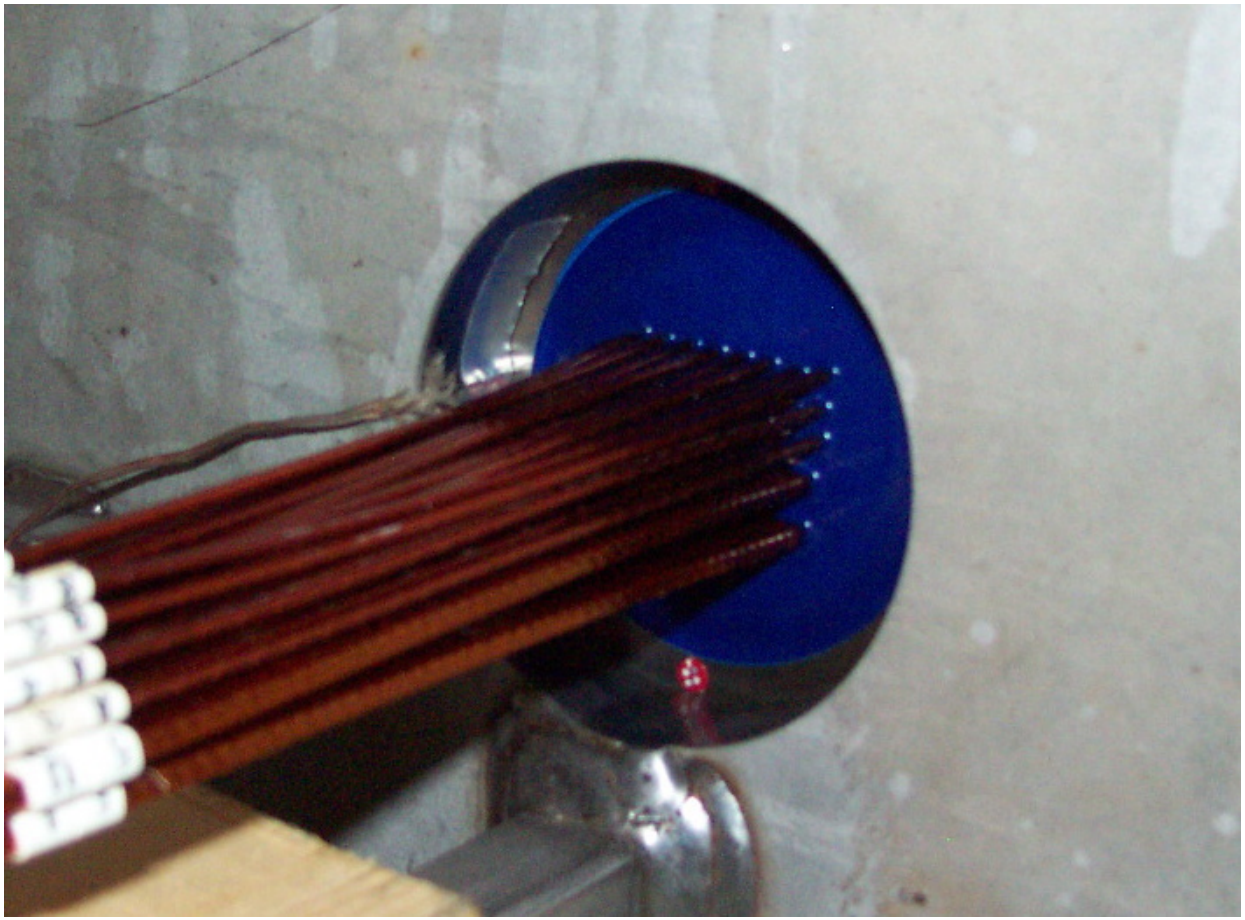

Current leads

- Well-developed technology
- Much information in the cryogenics literature
- CERN has defined the state of the art
- HTS materials work very well in current leads up to 80 K

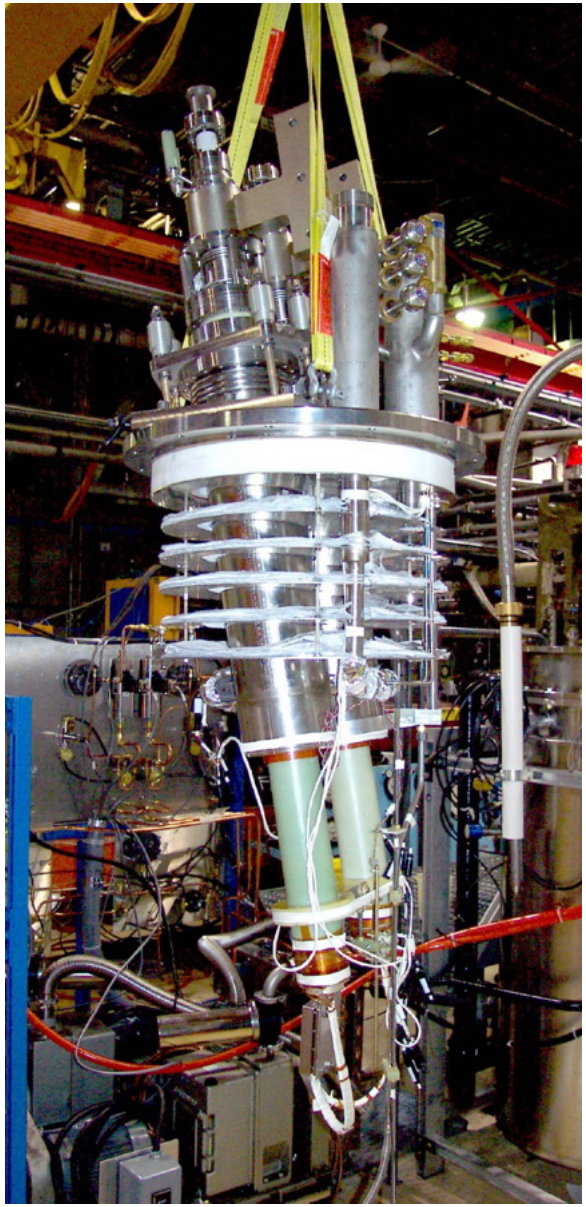

Current lead installation

- Most problems today arise with current lead integration into the supply box
  - Temperature at top plate
    - Leakage of cold seals
  - Vacuum or "chimney" enclosure
    - Heat transfer around or into lead
  - Temperature at joint to superconductor
    - Quench avoidance forces higher than optimal current lead flow

LHC test string 2 feed box

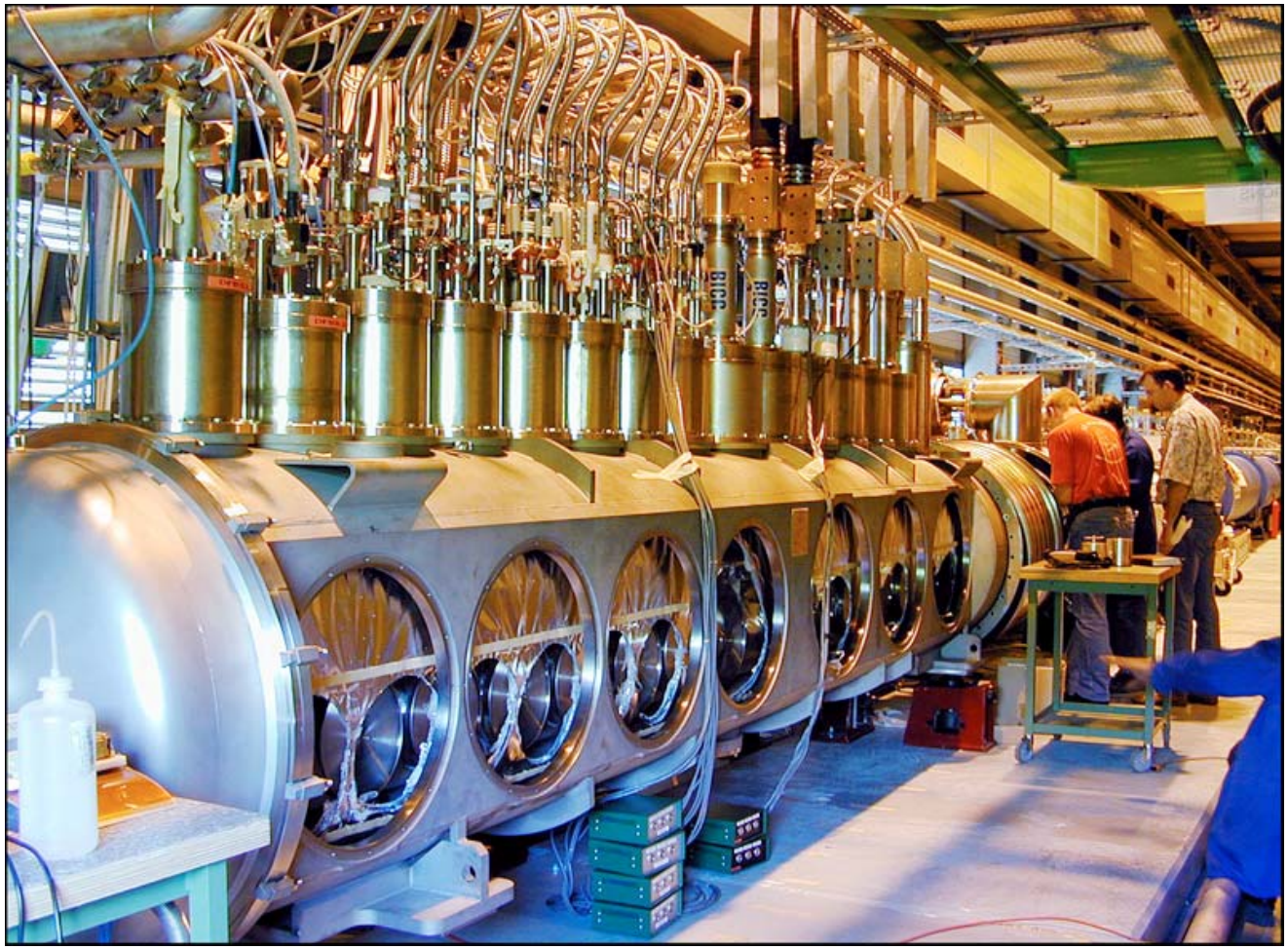

Many current leads and ports for access to make splice joints

The TTF III Power Coupler

- TTF III Coupler has a robust and reliable design.
- Extensively power tested with significant margin
- New Coupler Test Stand at LAL, Orsay

frequency	1.3 GHz
operation	pulsed: 500 μsec rise time, 800 μsec flat top with beam
two windows, TiN coated	• safe operation • clean cavity assembly for high Eacc
2 K heat load	0.06 W
4 K heat load	0.5 W
70 K heat load	6 W
isolated inner conductor	bias voltage, suppressing multipacting
diagnostic	sufficient for safe operation and monitoring

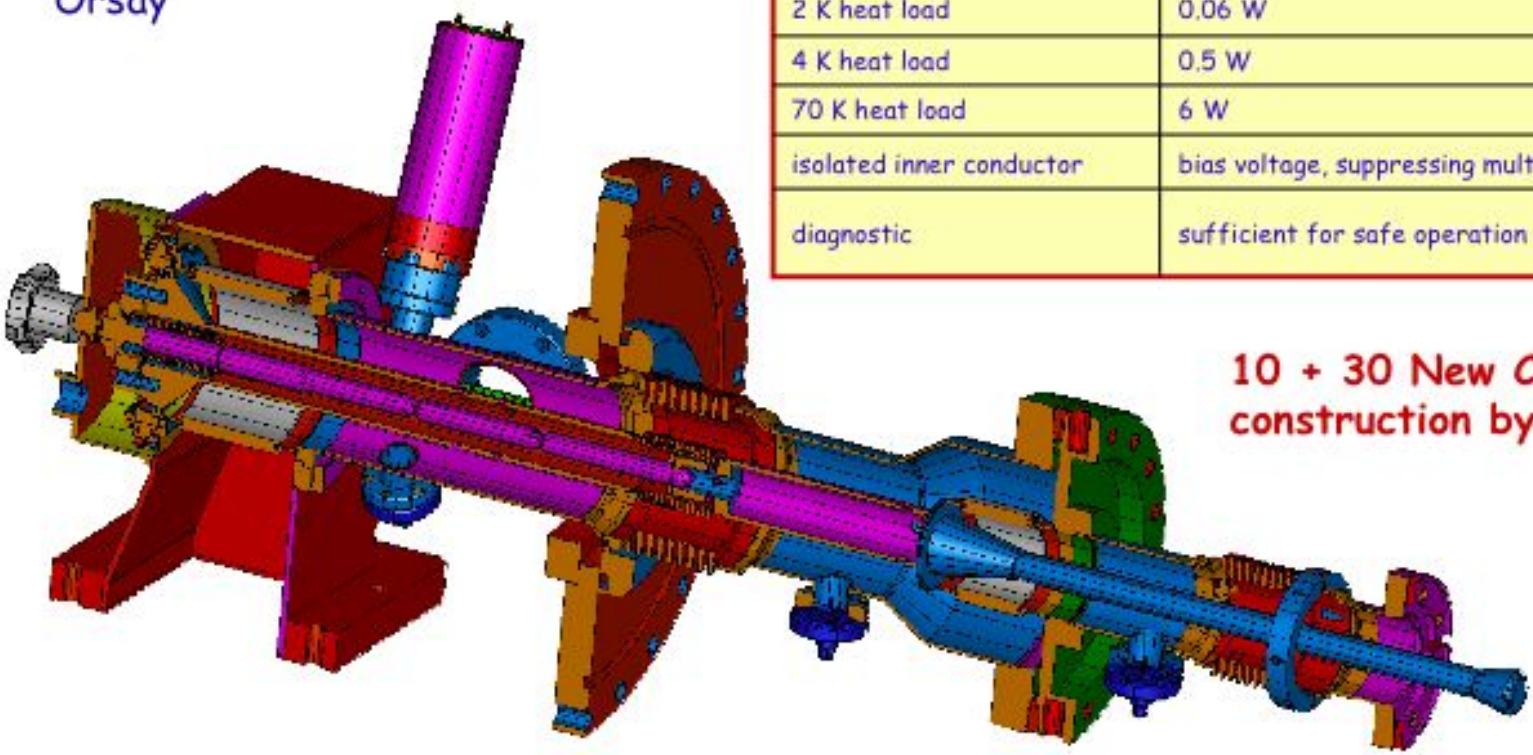

10 + 30 New Couplers in construction by industry

Instrumentation thermal transitions (1)

- "Cryogenic" (low thermal conductivity) wire such as phosphor bronze or manganin for low currents
- Wires in tube which also bridges the low temperature space to room temperature space
  - Fermilab, DESY, and CERN all try to avoid cold feed-throughs
- Room temperature seal from cryogenic region to air. Seals to vacuum are welded or brazed.
- Good packing factor (while still allowing wire pull) and length prevent thermo-acoustic oscillations and heat leaks.
- Typical is 6 mm (1/4 inch) tubing with 1 meter (minimum) between 4 K and 80 K and 1 meter (minimum) between 80 K and room temperature
- Tube may also serve as pressure tap.

Instrumentation thermal transitions (2)

- Transitions containing gas are always arranged so the thermal gradient is up.
- Larger wire bundles (e.g., 100+ wires in 3/4 inch tube) are potted with Stycast® Epoxy 2850-FT, Catalyst 24-LV at the thermal intercept.
- The potted section is not vacuum-tight (leakage through wires), but serves as a thermal sink and blocks convection.
- The space above a potted section is pumped and back-filled with helium and also includes a trapped-volume relief in case cold gas needs to be vented upon warm-up.

Overpressurization

- Cryogens expand by about a factor of 800:1 in going from the liquid state to ambient temperature
- If constrained by a constant volume, pressures become enormous and the container will burst
  - "Trapped volumes" are always a concern
- Air condensing on the cold outside surface of a liquid helium vessel (for example, due to loss of insulating vacuum) can deposit up to 4 W/cm^2, resulting in tens of KW of heating and many kg/sec mass flow rate required for safe venting of containers of only 100 liters in volume.
- The beam vacuum of an SRF system presents this problem.

Relief Valves

- Valves which open when triggered by sensing a "set" pressure in order to prevent over-pressure of a volume
- Typically directly driven open by overpressure, not by an actuator or control system
  - Diagram at right from http://webwormcpt.blogspot.com/2008/01/useful-documents-related-to-pressure_07.html

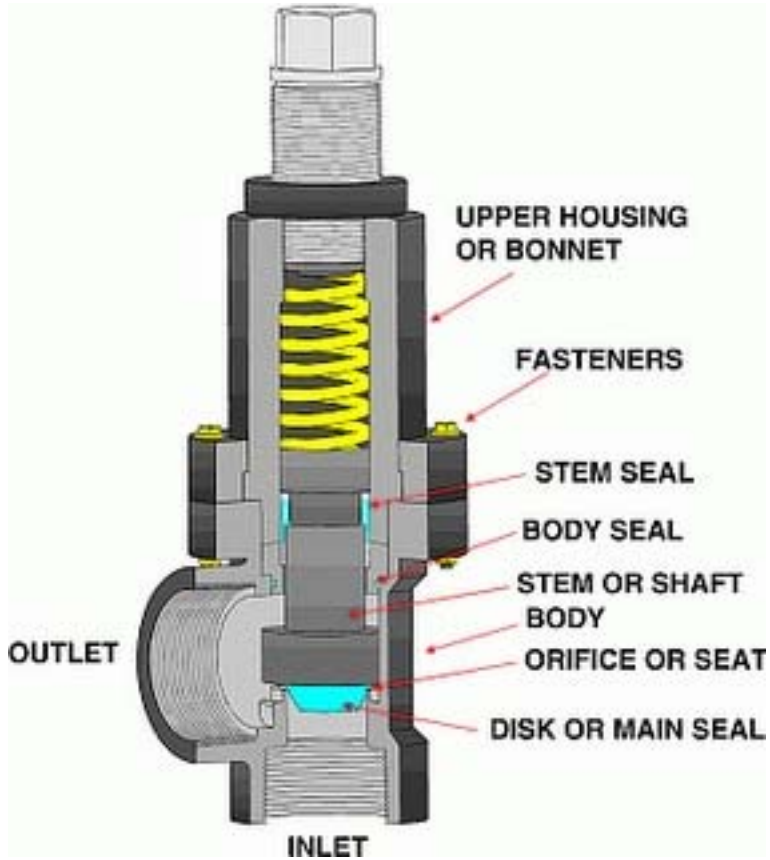

Kautzky Valves

- Devised by Hans Kautzky (Fermilab) in late '70's.
- Thornton Murphy, Don Breyne, and others, and I "industrialized" it
- Concept was to have hysteresis to avoid valve chatter
- Chatters anyway
- But an inexpensive and practical "quench" (not "safety"!) valve

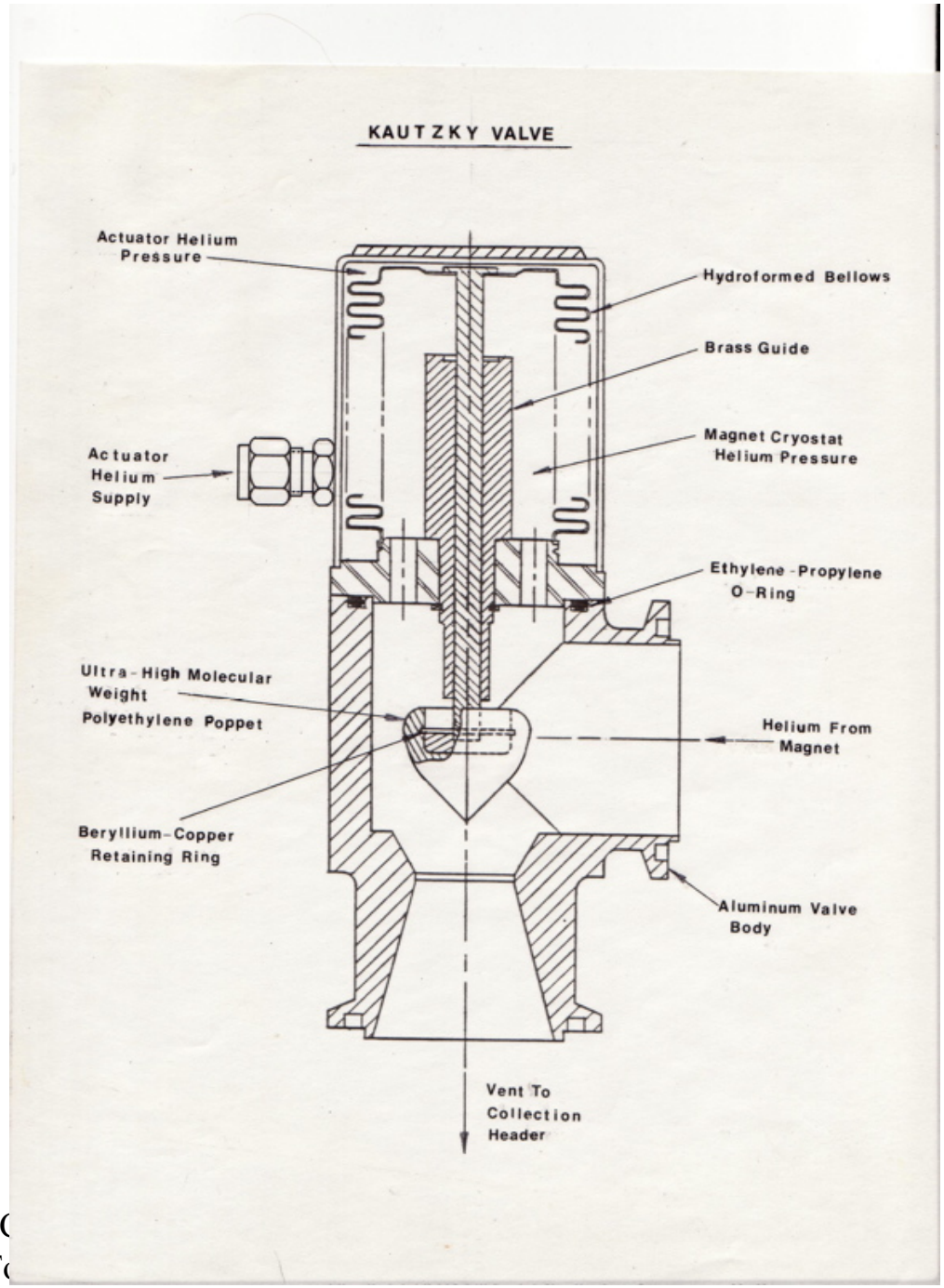

Kautzky valves in the tunnel

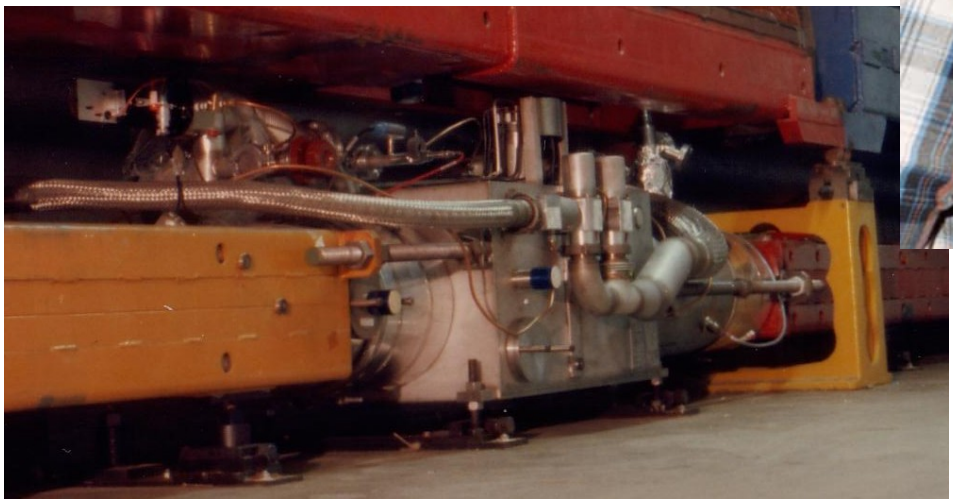

Bayonet assembly

- One seal for a cold, vacuum-jacketed line
- Figure from Eden Cryogenics catalogue

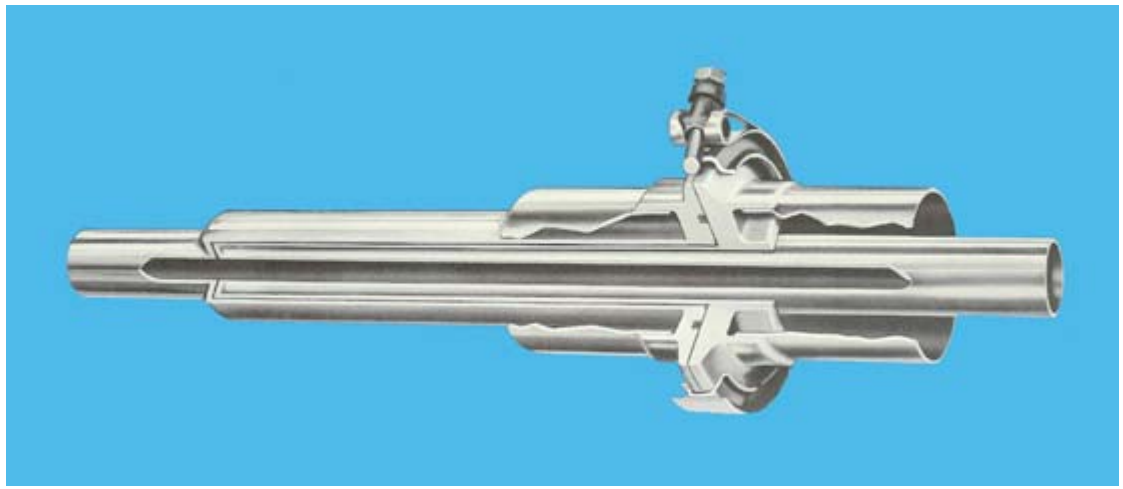

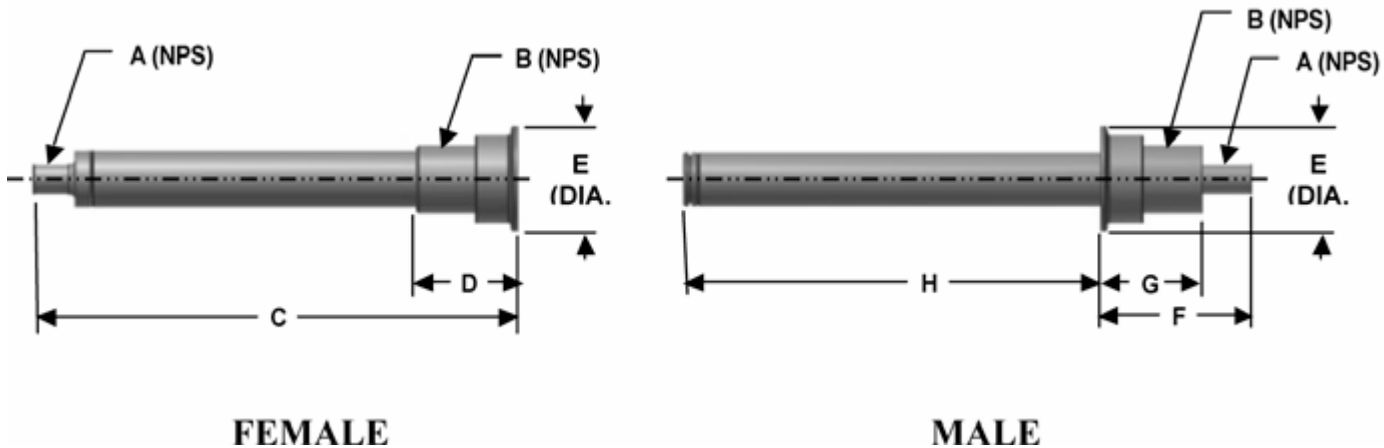

Expanders

- Provide cooling at various temperature levels in the refrigerator by allowing the helium to "do work"
- "Expansion engines" are piston machines
- Satellite refrigerator engines shown at right

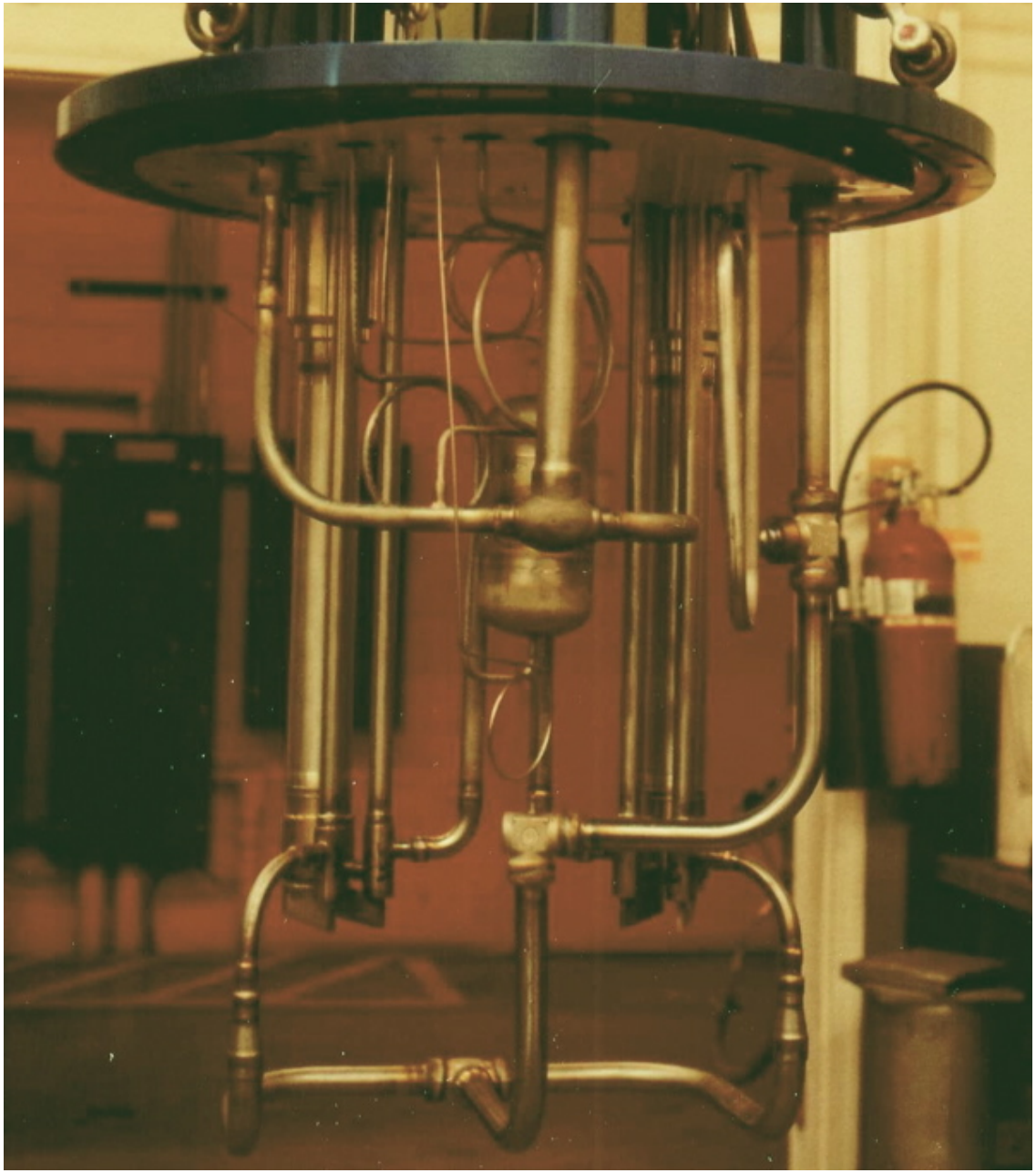

Expansion engines

- View inside the cryostat
- Cylinders are two long vertical pipes
- Valves are two thinner pipes extending to the bottom of each cylinder
- A “wet” engine expands into the two-phase regime
- Mechanical reliability and maintenance are issues for reciprocating expanders

Cryogenic Turboexpander

Cryogenic turboexpander
Self-acting gas bearing system

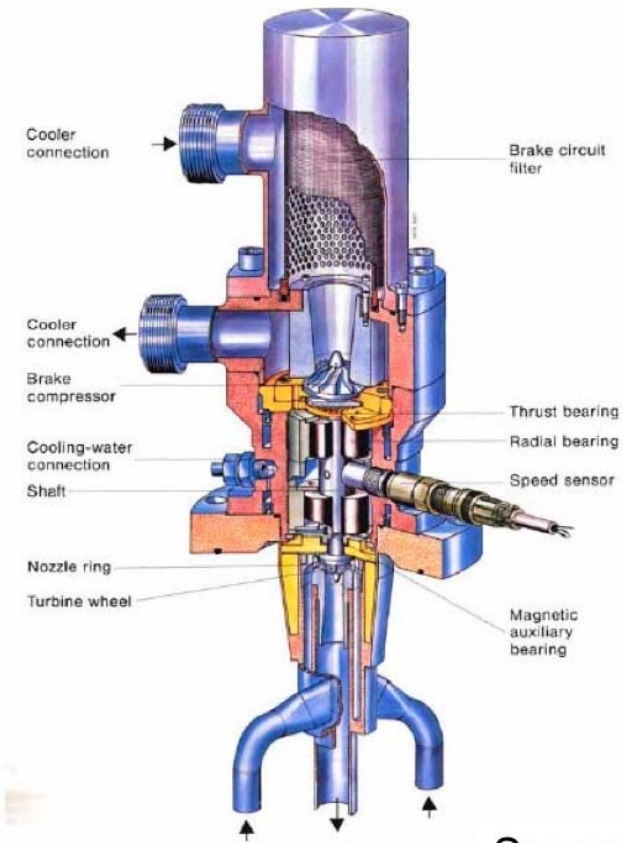

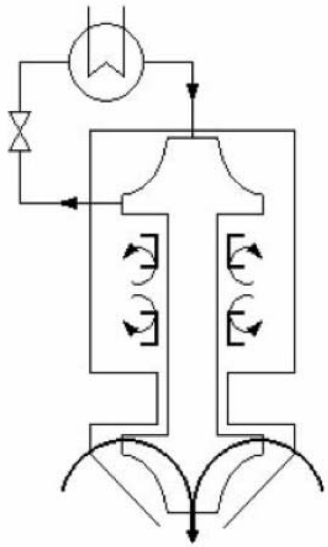

Source: LINDEKRYOTECHNIK AG
and Bernd Petersen, DESY

Contamination

- The most common problem in cryogenic system reliability is contamination
  - All other gases freeze in low temperature helium
  - Purities of a few ppm or better are required
  - Removal of frozen contaminants requires warm-up
  - Air in-leakage can shut down a cryogenic system for days
  - Subatmospheric systems are most at risk
  - Sources of contamination may include not only air leaking into subatmospheric sections but contaminated source gas, placing new equipment in the system, and diffusion in via helium leaks

Purification

- Activated charcoal (charcoal "bed") at room temperature removes oil vapor and water
  - Molecular sieve is also used for water absorption at room temperature
- Activated charcoal at 80 K removes air (an "80 K bed")
- Activated charcoal at 20 K removes neon (a "20 K bed")

Safety and compliance issues at Fermilab

- Increasing demand by DOE for compliance to engineering standards such as ASME codes
- 10CFR851 (Code of Federal Regulations), dated Feb 9, 2006, governs "the conduct of contractor activities at DOE sites".
- Part 4, the "Pressure Safety" section says, "Contractors must ensure that all pressure vessels, boilers, air receivers, and supporting piping systems conform to [the applicable ASME pressure vessel and piping codes]".
- "When national consensus codes are not applicable (because of pressure range, vessel geometry, use of special materials, etc.), contractors must implement measures to provide equivalent protection and ensure a level of safety greater than or equal to the level of protection afforded by the ASME or applicable state or local code."

Fermilab ES&H Manual contents

- Fermilab's ES&H manual already required essentially the equivalent of 10CFR851
- But there is an increasing emphasis on strict compliance
- The result will be more engineering time for project documentation

Relevant Fermilab ES&H Manual Chapters

- 5031 Pressure Vessels 09/2006
- 5031.1 Pressure Piping Systems 11/2007
- 5031.2 Onsite Filling Guidelines, Rev. 04/2007
- 5031.3 Gas Regulators Rev. 02/06
- 5031.4 Inspection and Testing of Relief Systems Rev. 06/2006
- 5031.5 Low Pressure Vessels 07/2002

Relevant Fermilab ES&H Manual Chapters

- 5032 Cryogenic System Review Rev. 05/2005
- 5032.1 Liquid Nitrogen Dewar Installation and Operation Rules Rev. 08/2004
- 5032.2 Guidelines for the Design, Review and Approval of Liquid Cryogenic Targets Rev. 11/95
- 5032.3 Transporting Gases in Building Elevators 02/2006
- 5033 Vacuum Vessel Safety Rev. 2/2002
- 5033.1 Vacuum Window Safety, 07/2004

Relevant Fermilab ES&H Manual Chapters

- 5034 Pressure Vessel Testing 3/2001
- 5034.1 Retesting Procedures for D.O.T. Gas Storage Cylinders Including Tube Trailers 12/2006
- 5063 Confined Spaces 11/2004
- 5064 Oxygen Deficiency Hazards (ODH) 12/2003

Outline of a typical cryogenic system safety document

- Flow schematic, or "process and instrumentation diagram" (P&ID)
- Valve and instrumentation list
- Vessel and piping engineering notes
- Failure mode and effects analysis (FMEA)
- What-if analysis
- Operating procedures
- Oxygen deficiency hazards analysis (ODH)

References

- This talk will be available at
  - http://www-bd.fnal.gov/ADSeminars/
  - http://tdserver1.fnal.gov/peterson/tom/refmenu.htm
- Cryogenic Engineering Conference (CEC) and International Cryogenic Engineering Conference (ICEC) proceedings provide a wealth of information

Thank you for your interest!

Additional information

The need for cryogenic temperatures for cooling superconductors

Conductor	Critical temperature (K)	Typical operating temperature (K)
Nb	9.3	1.8 – 5.0
NbTi	10	1.8 – 5.0
Nb_3Sn	18	4.5 – 10
$YBa_2Cu_3O_7$ (YBCO)	92	20 – 80
$Bi_2Sr_2Ca_2Cu_3O_{10}$ (BSCCO)	108	20 – 80

Some possible refrigerants

Substance	Normal boiling point (K)	Fusion temperature (K)
Oxygen	90.18	54.40
Argon	87.28	83.85
Nitrogen	77.36	63.15
Neon	27.09	24.57
Hydrogen	20.39	13.96
Helium	4.224	-----

Helium phase diagram

(Steven W. VanSciver, Helium Cryogenics, p. 54)

- Critical point is 5.2 K, 2.245 atm
- Lambda transition from helium I to helium II is 2.172 K

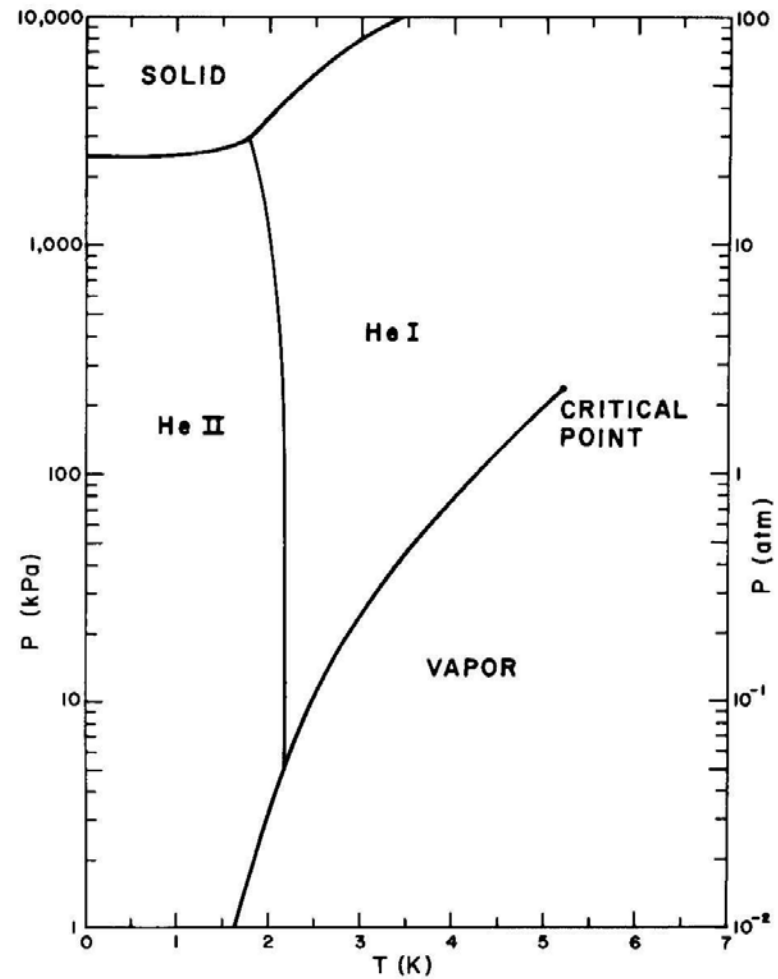

Fig. 3.1. ^{4}He phase diagram.

Isothermal heat absorption

- Net ideal work (energy per unit mass of working fluid) into the system is $T_{amb}\Delta s - \Delta h$
- For a refrigerator with the heat load absorbed by evaporation at constant liquid temperature, T_{liq}, $\Delta h = T_{liq}\,\Delta s$
- Thus, the ratio of applied work to heat absorbed is $(T_{amb}\,\Delta s - \Delta h)/\,\Delta h = T_{amb}/T_{liq} - 1$
- For low temperatures this is approximately the ratio of absolute temperatures, T_{amb}/T_l

Power required for a non-isothermal load

- - $P = \dot{m}\{T_{amb}(s_{out} - s_{in}) - (h_{out} - h_{in})\}$
- Where P is the ideal room-temperature power required to remove a non-isothermal heat load, mdot is mass flow. T is temperature to which heat is ultimately rejected, s and h are entropy and enthalpy

Helium cycle efficiency

	RHIC	CEBAF	HERA	LEP
Equivalent capacity at 4.5K (KW)	25	13	8.4 per coldbox	6 per coldbox
Power required in W/W	450	350	285	230
Efficiency	16%	20%	25%	30%

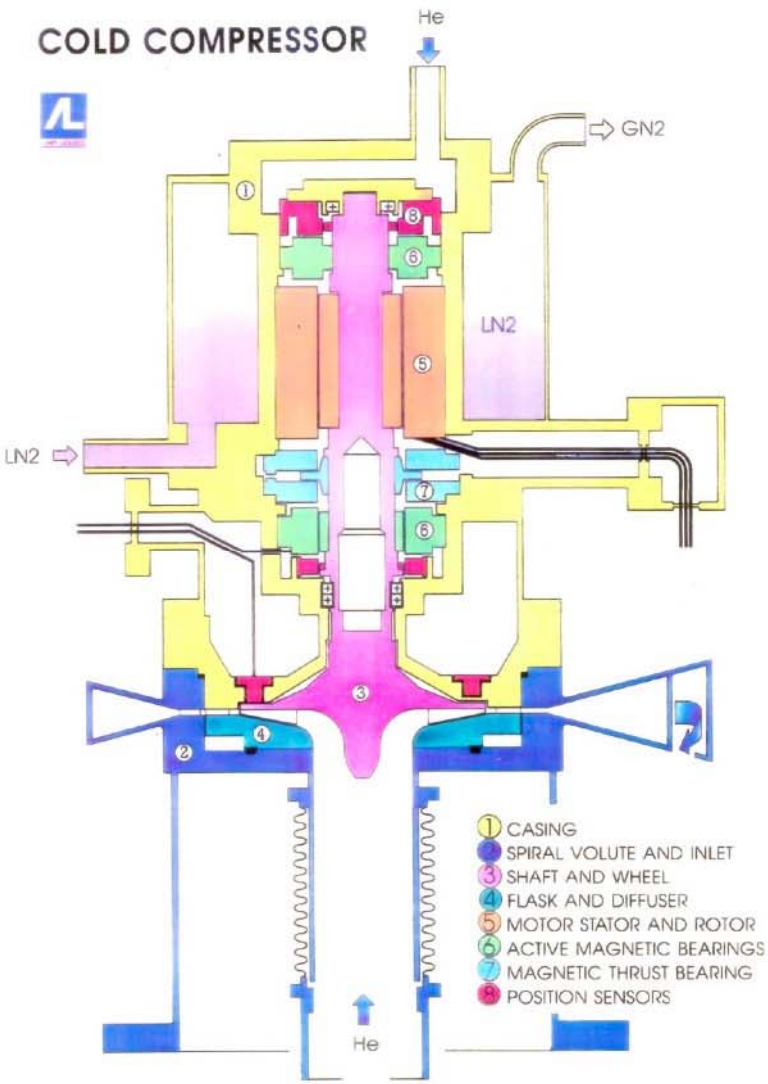

Example of a cold compressor with active magnetic bearings used at Tore Supra, CEBAF and Oak Ridge

Source: Air Liquide
and Bernd Petersen, DESY

Plot from "Simultaneous Flow of Oil and Gas," by Ovid Baker (1954) -- Do not use for helium!

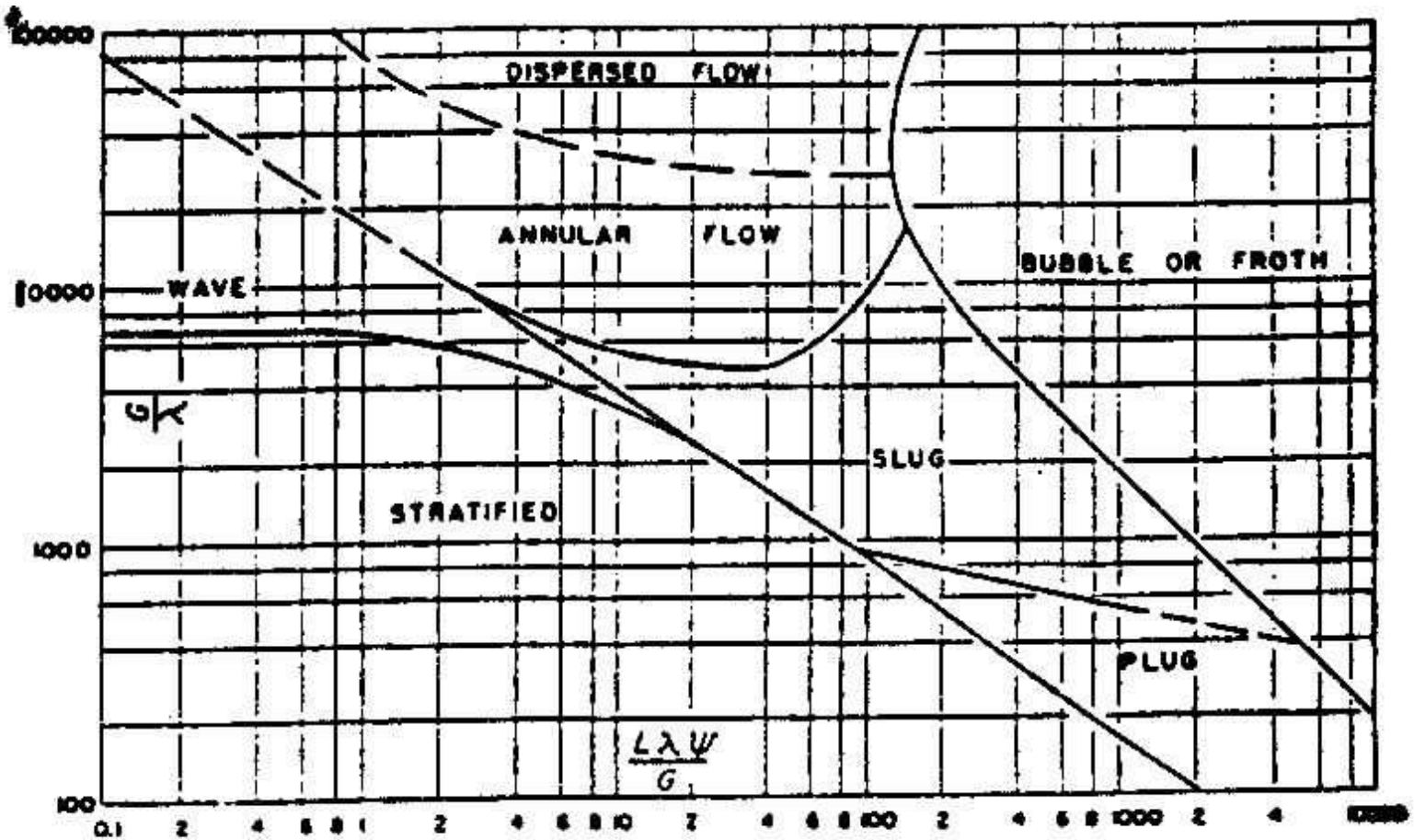

Fig. 3—Flow-pattern regions.

Cooling modes--surface heat flux

- Boiling helium I (normal helium)
  - 1 W/cm^2 in nucleate boiling with 0.5 K temperature rise to the object surface so equivalent to 2 W/cm^{2}K
- Forced convection helium I
  - Convection coefficients on the order of 0.1 W/cm^{2}K
- Saturated helium II (superfluid helium, SF)
  - 1 W/cm^2 heat transport to the surface without bubbles
- Pressurized helium II
  - Kapitza conductance about 0.6 W/cm^{2}K

Heat transport through channels--pressurized normal helium in SSC

- SSC dipole nominal operating temperature was to be 4.35 K, tightly constrained for magnet quench performance
- Allowable temperature rise of only 0.050 K allowed heat absorption of about 4 J/gK x 0.050 K = 0.20 J/g and forced high flow rate (100 g/s) as well as use of recoolers
- Forced flow of supercritical helium periodically recooled by heat exchange with a saturated bath

Heat transport through channels-- pressurized normal helium

- This plot of helium enthalpy versus T illustrates the large amount of heat absorbed (20+ J/g) if one can tolerate 6.5 K
- 25 g/s x 20 J/g= 500W between recoolers

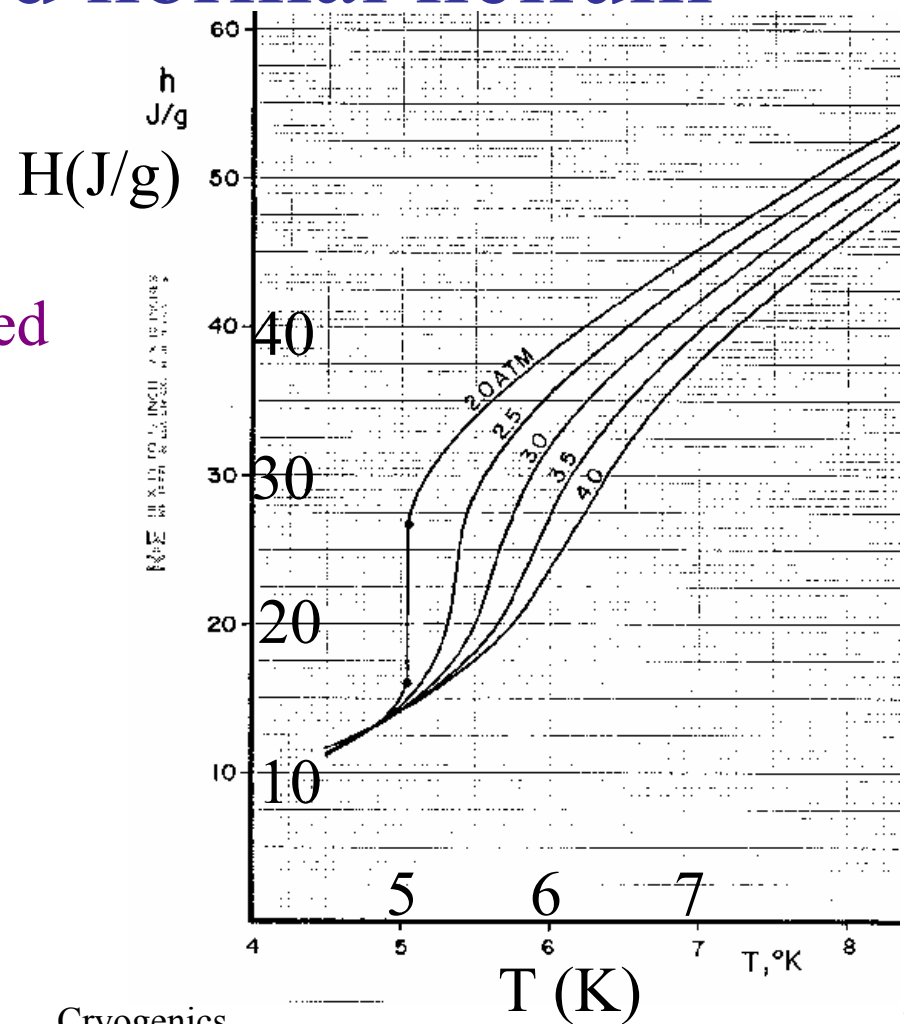

Helium II heat transport reference

- "Practical data on steady state heat transport in superfluid helium at atmospheric pressure"
  - By G. Bon Mardion, G. Claudet, and P. Seyfert, in Cryogenics, January 1979
- Solve the last equation on slide 23 for q, with a constant diameter channel and length L, and integrate over the temperature range from Tc to T-lambda
- One then has $q \bullet L^{1/m} = W(Tc,Tw)$, where the function $W = (\int(dT/F(T)))^{1/m}$
  - Bon Mardion, et. al., use m = 3.4

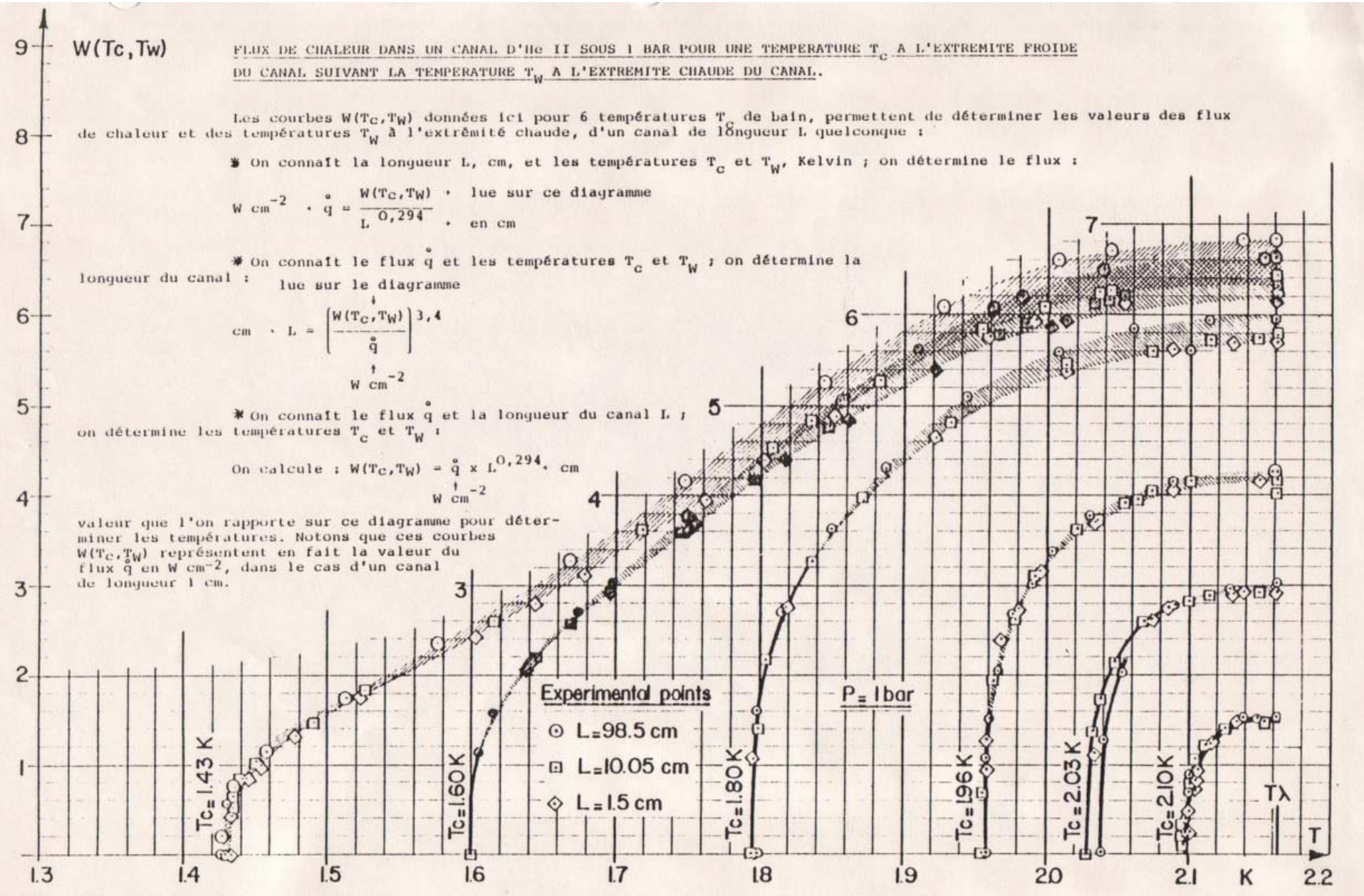
W(Tc,Tw)
FLUX DE CHALEUR DANS UN CANAL D'He II SOUS 1 BAR POUR UNE TEMPERATURE T_c A L'EXTREMITE FROIDE DU CANAL SUIVANT LA TEMPERATURE T_W A L'EXTREMITE CHAUDE DU CANAL.
Les courbes $W(T_C,T_W)$ données ici pour 6 températures T_c de bain, permettent de déterminer les valeurs des flux de chaleur et des températures T_W à l'extrêmité chaude, d'un canal de longueur L quelconque :
* On connaît la longueur L, cm, et les températures T_c et T_W, Kelvin ; on détermine le flux :
$W\ cm^{-2} \cdot \mathring{q} = \frac{W(T_C,T_W)}{L^{0,294}}$ · lue sur ce diagramme · en cm
* On connaît le flux $\mathring{q}$ et les températures T_c et T_W ; on détermine la longueur du canal :
lue sur le diagramme
$cm \cdot L = \left(\frac{W(T_C,T_W)}{\mathring{q}}\right)^{3,4}$
$W\ cm^{-2}$
* On connaît le flux $\mathring{q}$ et la longueur du canal L ; on détermine les températures T_c et T_W :
On calcule : $W(T_C,T_W) = \mathring{q} \times L^{0,294}$, cm
$W\ cm^{-2}$
valeur que l'on rapporte sur ce diagramme pour déterminer les températures. Notons que ces courbes $W(T_C,T_W)$ représentent en fait la valeur du flux $\mathring{q}$ en $W\ cm^{-2}$, dans le cas d'un canal de longueur 1 cm.
Experimental points
L=98.5 cm
L=10.05 cm
L=1.5 cm
P= 1bar
Tc=1.43 K
Tc=1.60 K
Tc=1.80 K
Tc=1.96 K
Tc=2.03 K
Tc=2.10 K
Tλ
T
K
1.3
1.4
1.5
1.6
1.7
1.8
1.9
2.0
2.1
2.2
1
2
3
4
5
6
7
8
9

Simplified SF heat analysis

- One can use this simplified heat transport analysis method in many ways for quick but reliably conservative design calculations
  - Size a long vent line pipe to minimize heat transport into the Helium II
  - Size capillary ports for equalizing pressure between normal and SF baths
  - Estimate the acceptable size of a crack in a seal (for example in an epoxy lambda plug)
    - Also then select a sealing surface length

CERN's Short Straight Section

Vittorio Parma -- CERN

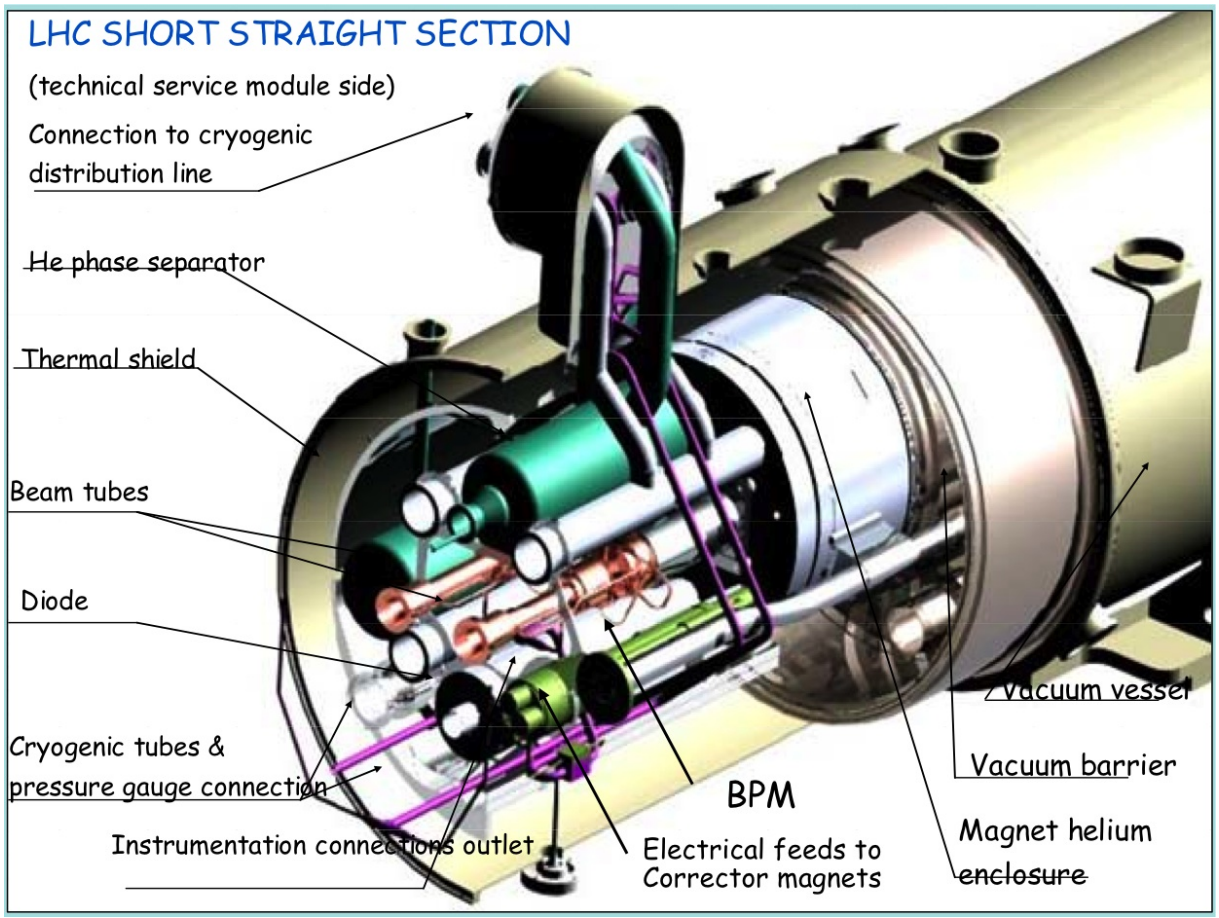

Vacuum barrier in SSS

Functions:

- Segmentation of insulation vacuum compartments (200m long)
- Piece-wise installation/commissioning of LHC vacuum systems
- Ease localisation of leaks
- Containment of accidental vacuum degradation
- Allow local intervention for machine maintenance

→ ~ 100 Vacuum Barriers required

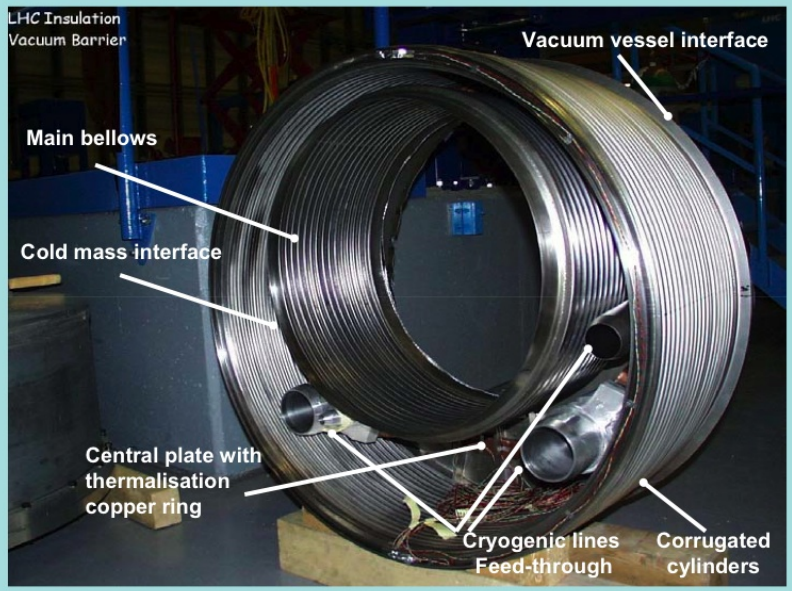

Instrumentation

- Useful for troubleshooting even if not required for process
- Flow (cold venturi, warm mass flow sensors)
- Temperature (calibrated resistors are so good that we no longer include vapor pressure thermometers)
- Pressure (cold transducers for fast response; warm sensors at end of cap tube filled with wires give 0.1 to 1.0 second response)

Instrumentation (a lot of it!)

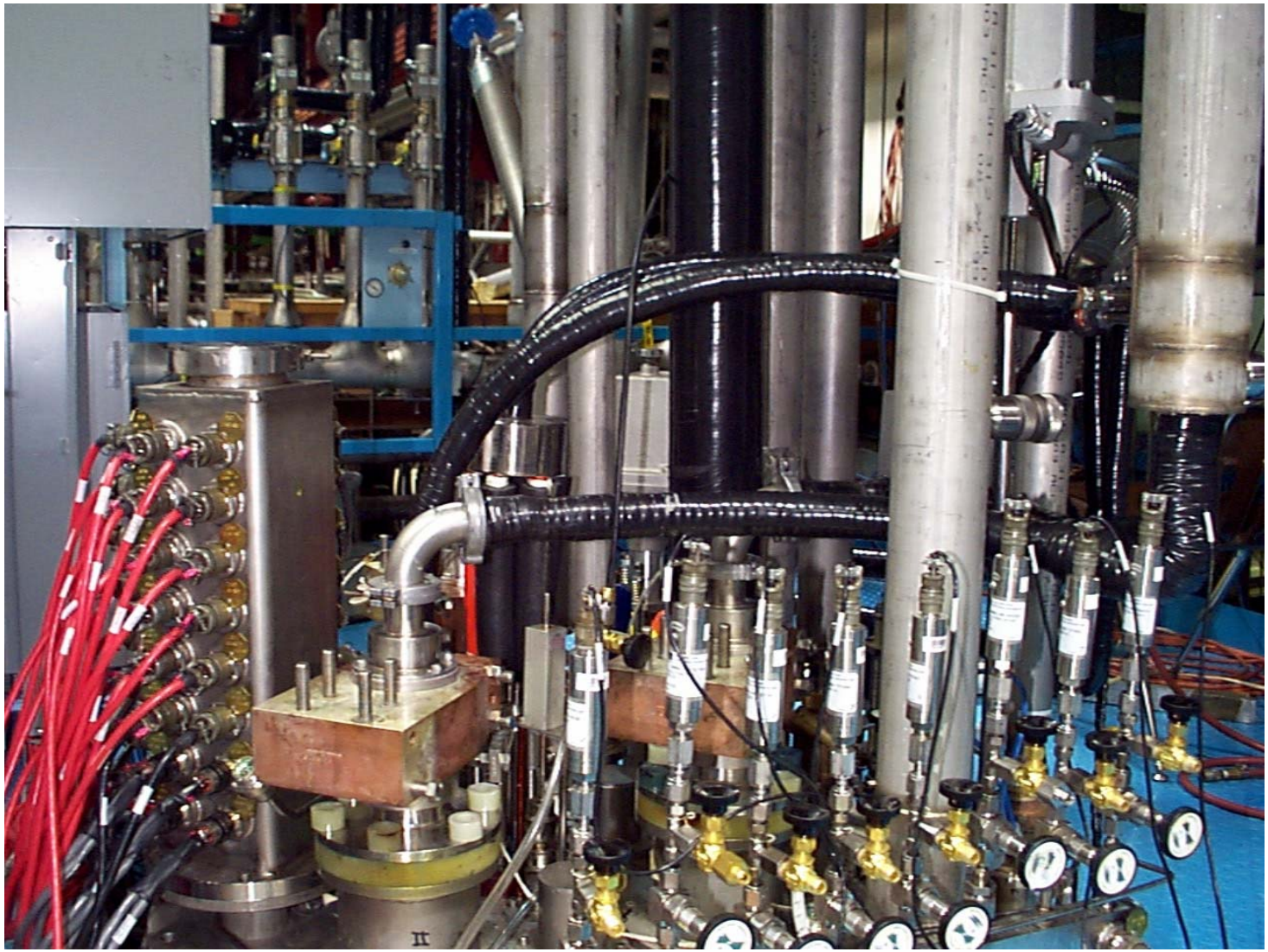

A stealthy heat source -- helium in-leak

- Several times in operating a test stand we have had mysteriously large heat loads appear which turned out to be very small in-leakage of warm helium gas
  - Warm-up valve may leak
    - 300 K helium into lower temperature or 4.5 K into 2 K space
  - Pressure drops may cause unexpected pressure differential
  - We recently had a pressure differential the opposite of what we expected (rapid fill pulled down a supply line pressure), and a leaking check valve. Result was an apparently large heat load during fill which did not dissipate as expected.

Lambda plug fabrication (LBL)- 1

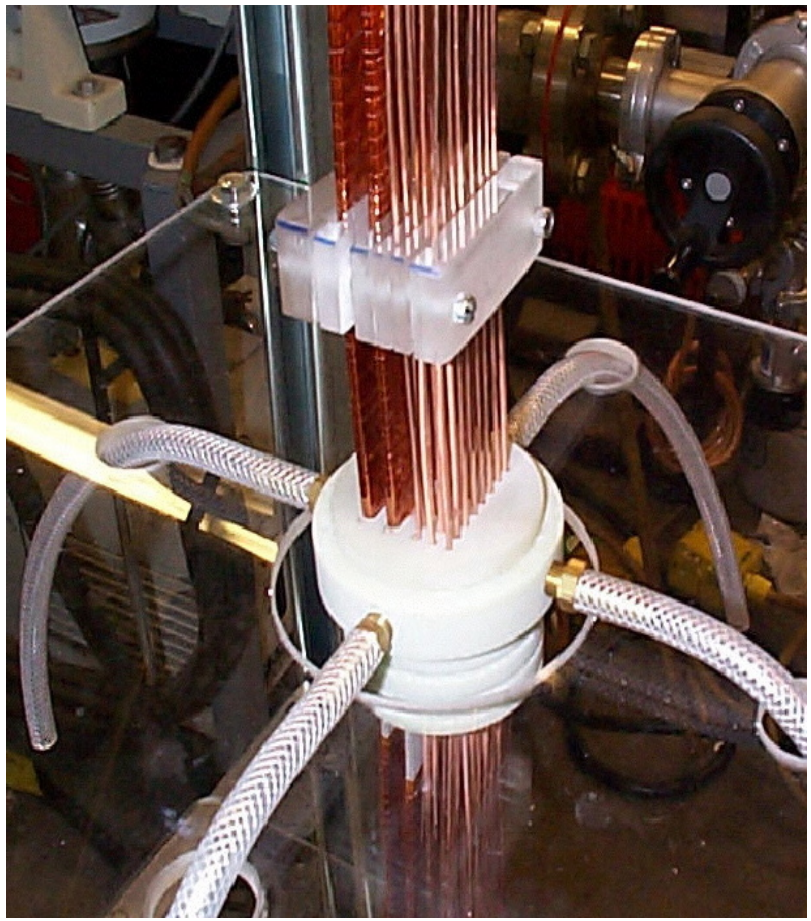

- Superconducting cable potted in an insulating block of G10-CR
  - Plane of reinforcement parallel to faces
  - Four 8 kA cables and 24 200-600 A cables
- Plug design and procedures developed at LBL

Lambda plug fabrication - 2

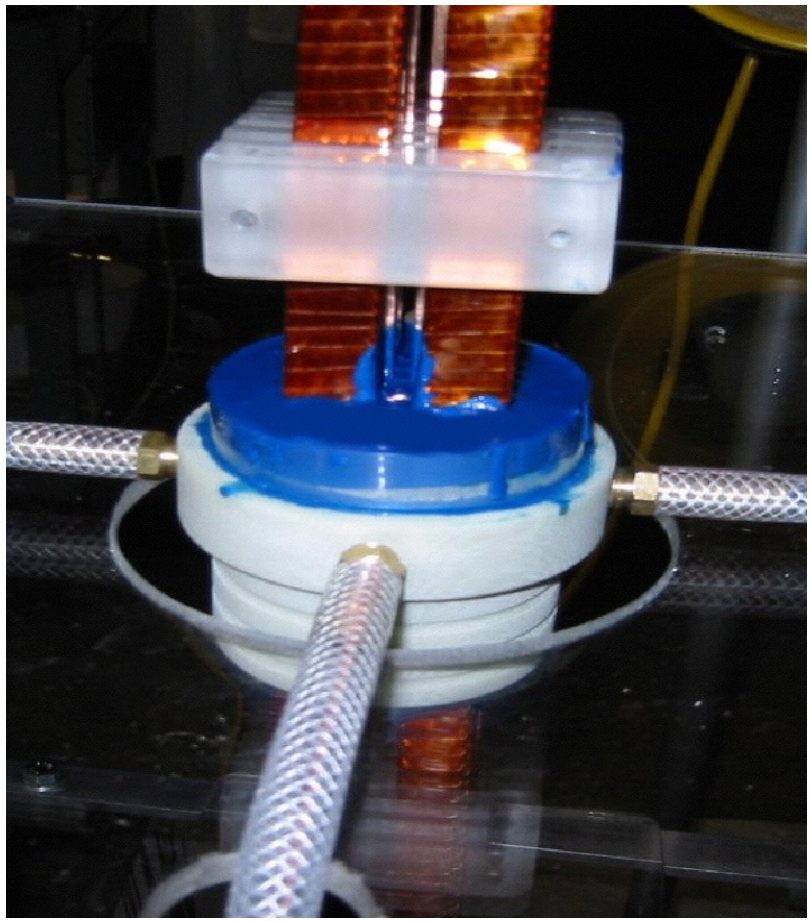

- Encapsulated in Stycast 2850MT (blue) epoxy using hardener 24LV
- Application via injection in a vacuum chamber

5031 Pressure Vessels

- "This chapter applies to any vessel used at Fermilab that falls within the scope of the American Society of Mechanical Engineers (ASME) Boiler and Pressure Vessel Code, Section VIII."
- Scope of ASME Boiler and Pressure Vessel Code, Section VIII, is basically
  - **15 psi differential pressure and > 6 inches diameter**
- "An Engineering Note shall be prepared by an engineer or designer for all existing or new operational pressure vessels at Fermilab"
- Purchased Vessels: All vessels purchased by Fermilab or its experimenters shall be made (designed and fabricated) in accordance with the Code, unless a determination has been made that another standard is more applicable.
- Rules also cover in-house built, non-code materials, existing and used vessels, exceptional vessels, etc.

5031.1 Pressure Piping Systems

- "*Policy*: All piping systems built and/or operated at Fermilab shall be in accordance with this chapter and the appropriate governing code", generally one of the ASME/ANSI B31 piping codes.
- An engineering note must be prepared, reviewed, and approved, depending on various factors but result is a reviewed note is required for most cryogenic piping systems
- But various exceptions and other rules also apply, such as for hydraulics, flammable gases, etc.

5032 Cryogenic System Review

- "This chapter describes procedures for reviewing the safety aspects of cryogenic systems as well as the required occupational training for cryogenic personnel. It pertains to all cryogenic systems including, for example, those used for refrigerating magnets, hydrogen targets, argon calorimeters, or as a source of gas. It also includes cryogenic systems supplying purge gas for detectors where the stored liquid inventory is greater than 200 liters."
- Review is required for new systems and after significant changes are made
- The chapter specifies what documentation is required, including
  - System design documents
  - Operating procedures
  - Safety analyses (FMEA, What-if, ODH)
  - Engineering documents (stress levels, relief valve sizing, etc.)

5033 Vacuum Vessel Safety

- A vacuum vessel is defined as
  - Over 12 inches diameter
  - Total volume greater than 35 cubic feet
  - Vessel under external pressure with Pressure x Volume > 515 psi-ft^3
- ASME code design rules apply in certain ways as described in the chapter
- An engineering note and review are required

5064 Oxygen Deficiency Hazards (ODH)

- An ODH area is one where the oxygen level could drop to below 18% oxygen, and the estimated probability of this happening is greater than 10^{-7} events per hour (about once every 1000 years)
- This chapter describes the hazard analysis procedure in detail