irfu
cea
saclay

XFEL
X-Ray Free-Electron Laser

XFel Module Assembly at CEA-Saclay

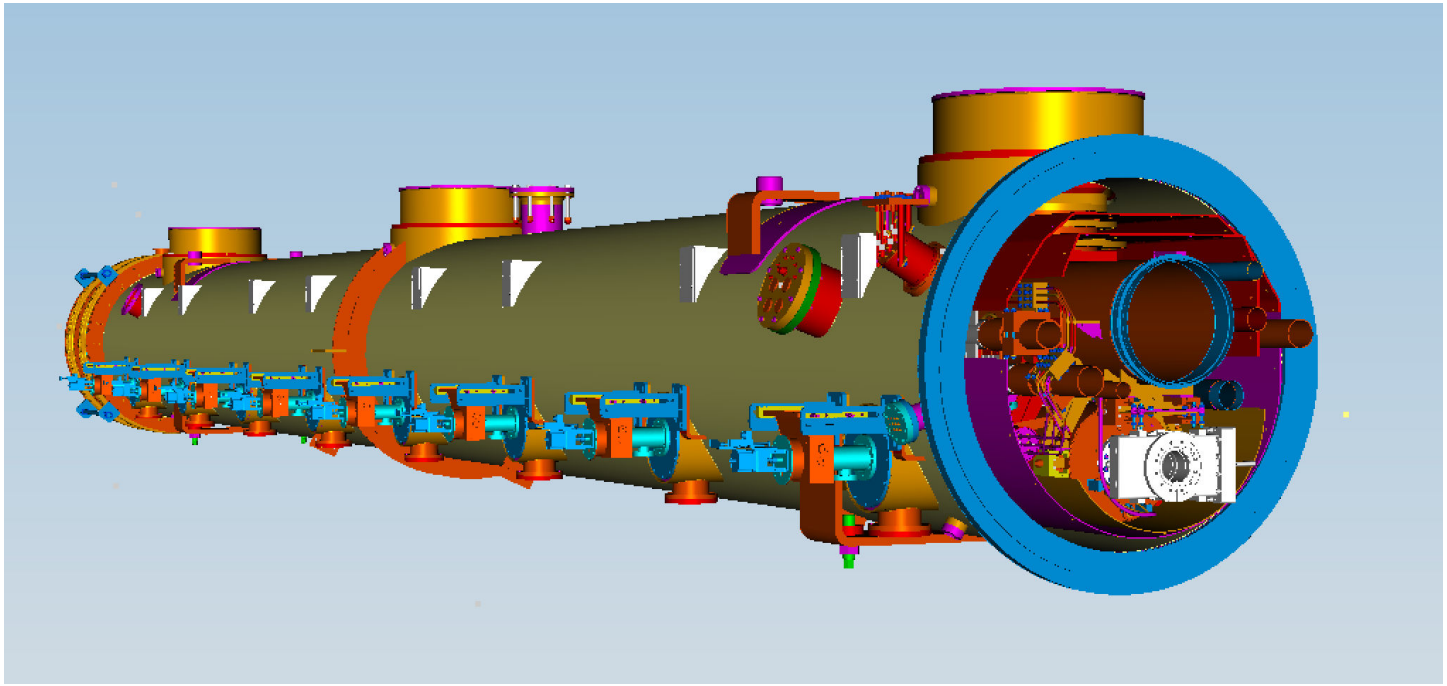

O. Napoly

Fermilab, 17 February 2009

OUTLINE

- XFEL Cold Linac (In Kind Contributions)
- Cryomodules Activities at CEA/Irfu, Saclay
- Overview of the Saclay assembly infrastructure, organisation, agenda
- Prototyping and M8 Transportation Test
- Activity Plans and Milestones for next year

XFEL Cold Linac: 17.5 GeV

RF Gun + 1 cryomodule + 25 RF units RF

(1 unit = 10 MW, 4 cryomodules, 32 cavities)

Injector + (1) x 4 x 8 x 12,5 MeV → 500 MeV

+ (2+1) x 4 x 8 x 23.6 MeV → 2 GeV

+ (20+1) x 4 x 8 x 23.6 MeV → 17.5 GeV

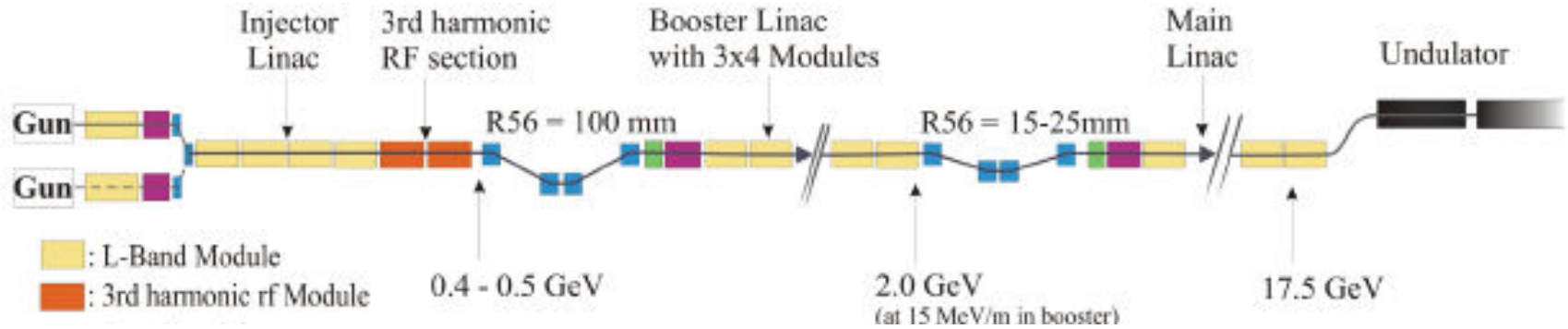

Total : **25 Klystrons, 101 Modules, 808 Cavities**

including 2 RF spare units (64 cavities) in the linac

XFEL Cold Linac: In Kind Contributions

- Shares of the Cold Linac are defined by the XFEL Cost Book 2005 Values

		Laboratory	Country	Invest / M€		FTE	FTE / M€	
Accelerator Modules	WP – 3	CEA Saclay	France		60%			43%
		INFN	Italy		19%			29%
		DESY	Germany		21%			29%
	sum				*100%*			*100%*
Superconducting Cavities	WP – 4	INFN						34%
		DESY						66%
	sum							*100%*
		Received from						
Power Couplers	WP – 5	LAL Orsay						52%
		DESY						48%
		or						
		LAL Orsay						100%
		DESY						0%
	sum							*100%*
HOM Coupler / Pick-up	WP – 6	IPJ Swierk						100%
	sum							*100%*
Frequency Tuners	WP – 7	DESY						100%
	sum							*100%*
Cold Vacuum	WP – 8	DESY						100%
	sum							*100%*
Cavity String Assembly / Clean Room Quality Assurance	WP – 9	CEA Saclay						51%
		DESY						49%
		Transferred to WP -4						
	sum				*100%*			*100%*
Cold magnets	WP - 11	CIEMAT	Spain		56%			10%
		DESY	Germany		44%			90%
	sum				*100%*			*100%*

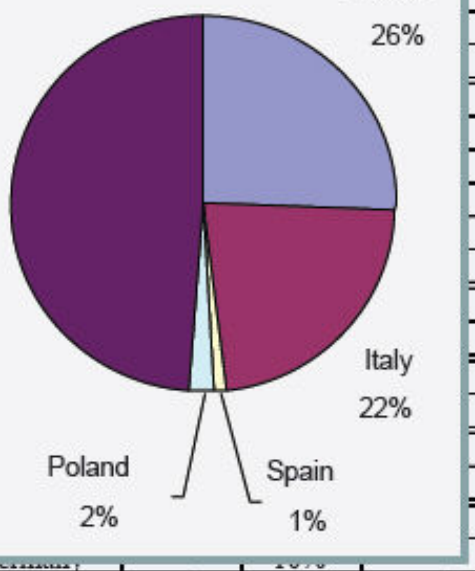

XFEL Cold Linac: Selected In Kinds

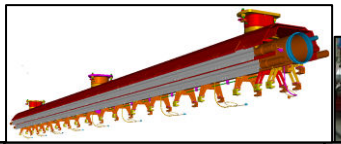

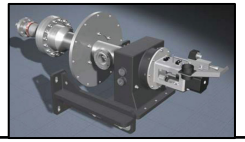

	WP3a Cold Mass Fabrication		WP3b Cryomodule Assembly		WP4 RF Cavities (incl.g He tank)		WP5 RF Couplers		WP9 Clean Room Assembly	
	Material	FTE	Material	FTE	Material	FTE	Material	FTE	Material	FTE
DESY	25%	25%	10 %	70%	50%	66%	-	-	10%	50%
INFN	25%	25%	-	10%	50%	34%	-	-	-	-
CEA	50%	50%	90 %	20%	-	-	-	-	90%	50%
IN2P3	-	-	-	-	-	-	100%	100%	-	-

Fine grain distribution of In-Kind contributions

⇒ CEA-Saclay will host the Industrialization of the 3+100 Cryomodules Assembly (WP3+WP9)

⇒ CEA/Irfu seeks the collaboration of experienced laboratories: DESY, INFN, …

XFEL Cold Linac WP Coordination

	WPL & WPCL
WP 01: Power RF	& ???
WP 02: LLRF	&
WP 03: Module	&
WP 04: Cavities	&
WP 05: Coupler	&
WP 06: HOM	&
WP 07: Tuner	&
WP 08: Cold Vacuum	& ???
WP 09: String Assembly	&
WP 11: Cold Magnets	&
WP 46: 3.9 GHz	&

CEA, DESY, INFN

CEA, DESY

under the Technical Coordination of WPG1 Hans Weise.

CEA-/Irfu is also contributing to the Cold BPM WP17

XFel Schedule (Nov.07)

☺ All civil engineering orders (~240 M€) have been passed.

☹ No other tendering started, awaiting the XFel Convention.

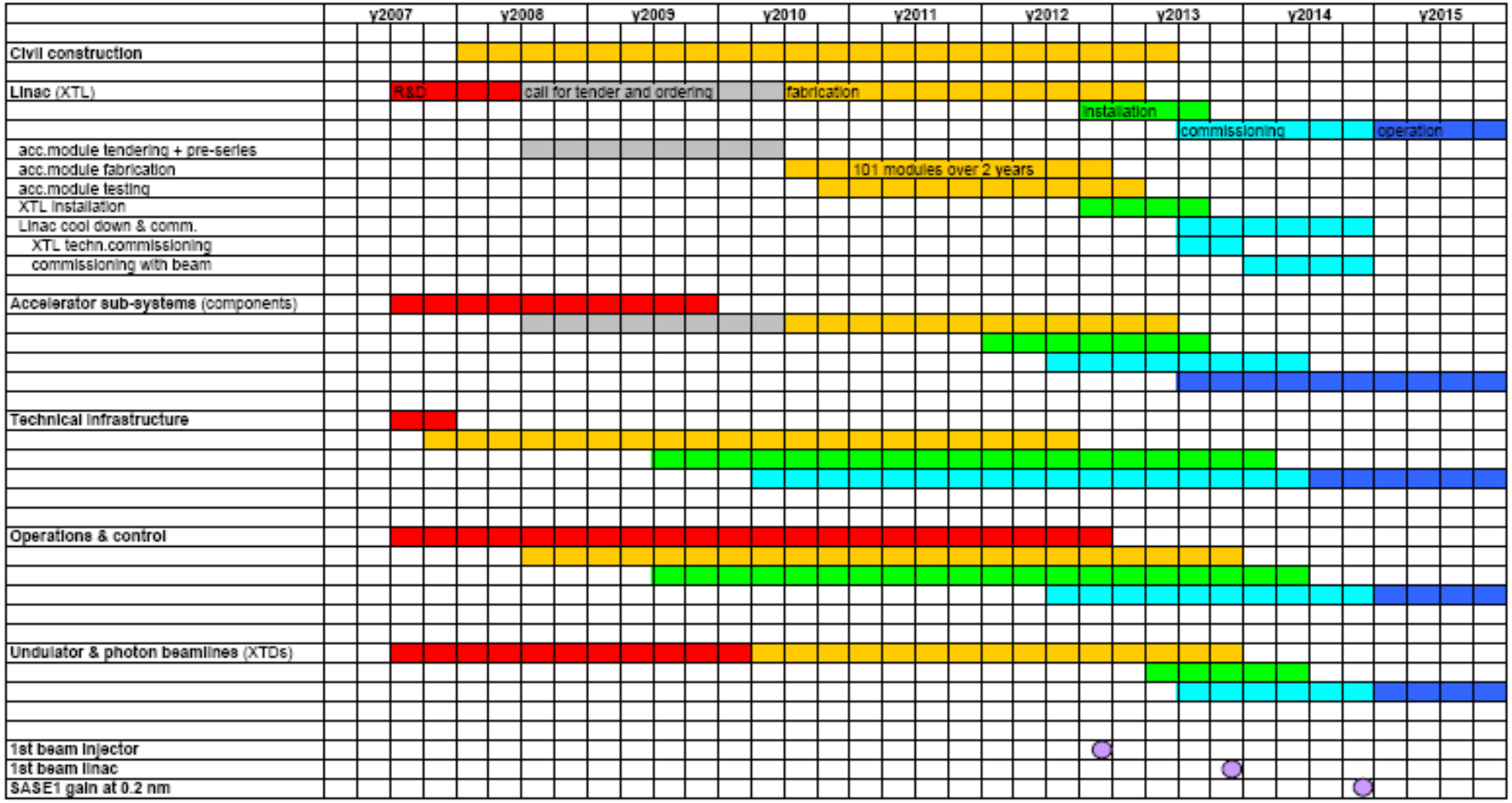

XFel Schedule (Jan. 09)

- The **civil construction** has started, a first web cam is available via http://www.xfel.eu/de/construction-webcams/
- **Milestones**:

1. AMTF hall ready for installation of equipment 30.03.10
2. AMTF vertical tests ready for commissioning 03.01.11
   (an Input Milestones)
3. AMTF horiz^{al} tests ready for commissioning 28.03.11
   (an Output Milestones)
4. XTL tunnel ready for pre-installation 23.01.12
   (an Output Milestones)
5. XTL tunnel ready for first modules 15.03.13
6. First beam expected spring 2014

- **Cavity fabrication** is expected to be on critical path.

Cryomodule Realisations at Saclay

Past Activities

- TTF1 Capture Cavity
- CHECHIA horizontal test stand at DESY
- S3HC harmonic cavity for SLS / ELETTRA (1.5 GHz)
- CARE/HIPPI proton cavity β=0.47 (704 MHz)
- SOLEIL cryomodule n°1 (352 MHz)

Current and Future Activities

- CryHoLab horizontal test stand (704 MHz, 1.3 GHz)
- SPL proton cavity β=1 (704 MHz)
- SOLEIL cryomodule n°2
- Spiral 2 cryomodule (12 @ 88 MHz)
- IFMIF D+ cryomodule (176 MHz)
- XFEL module assembly (1.3 GHz)

SOLEIL Cryomodules (352 MHz)

3rd Harmonic RF cavity in SLS (1.5 GHz)

High brightness ⇒ small tranverse dimensions (emittance)

High charge density ⇒ short lifetime (Touschek scattering)

Decrease charge density in lengthening the bunches using a harmonic RF system
« 1.5 GHz scaling » of the CEA-SOLEIL design

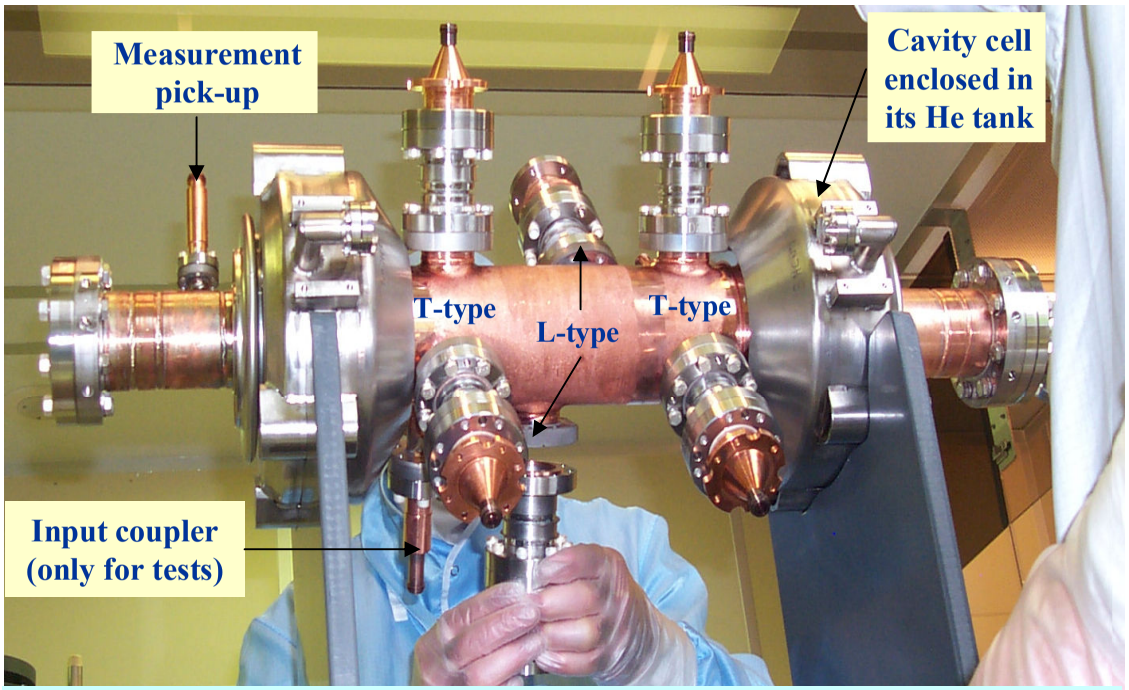

Assembly of the S3HC module at CEA-Saclay

Assembly, *final cryo and RF tests at* ***CEA Saclay***

Changes from initial SOLEIL design **:**

- ✓ 4 T-type HOM couplers
- ✓ conduction-cooled HOM couplers (no He circulation)
- ✓ No input power coupler (operation in passive mode)

SPIRAL 2 cryomodule (D+, 88 MHz)

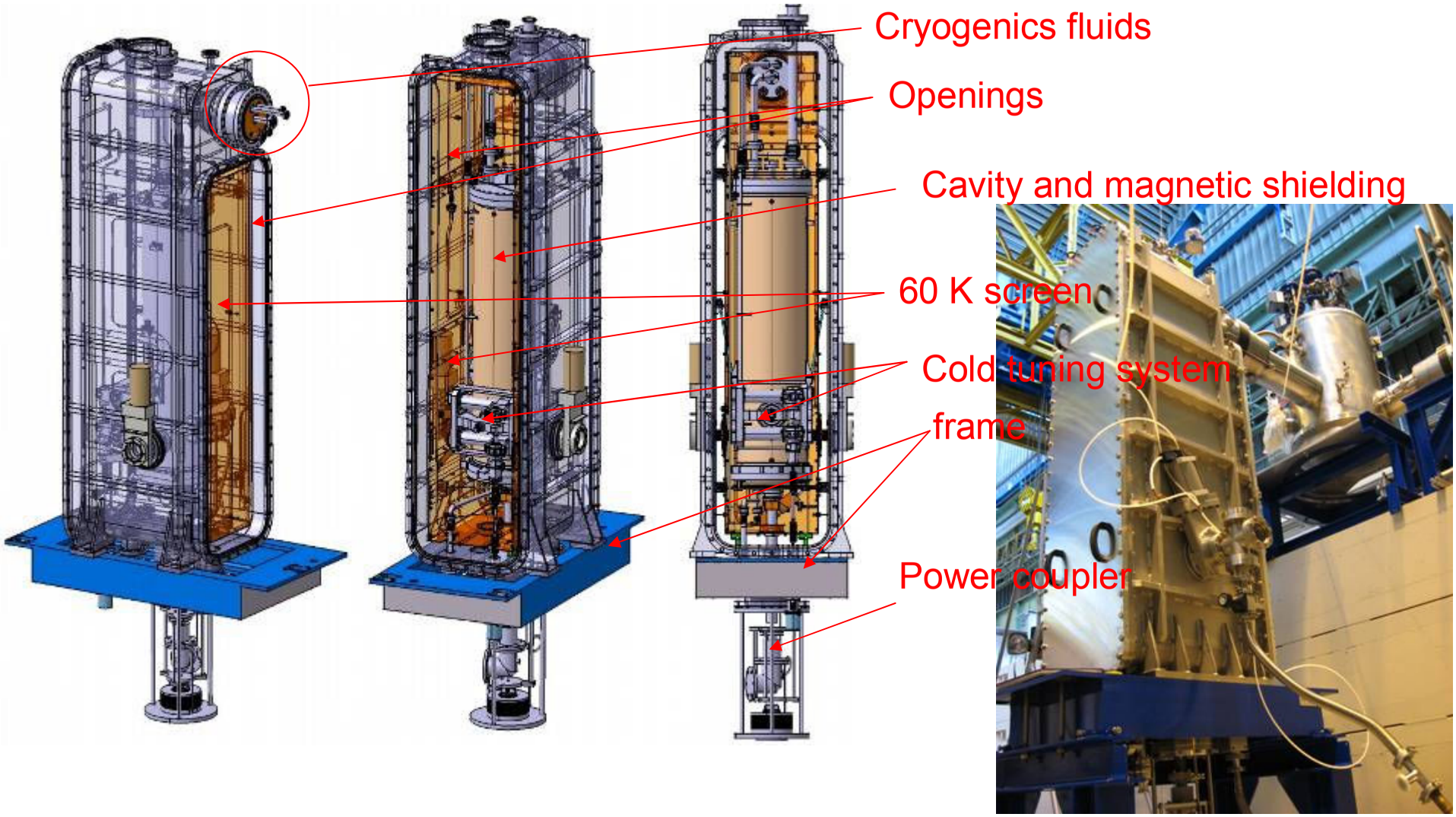

CARE/HIPPI Cavity (H+, 704 MHz, β=0.47)

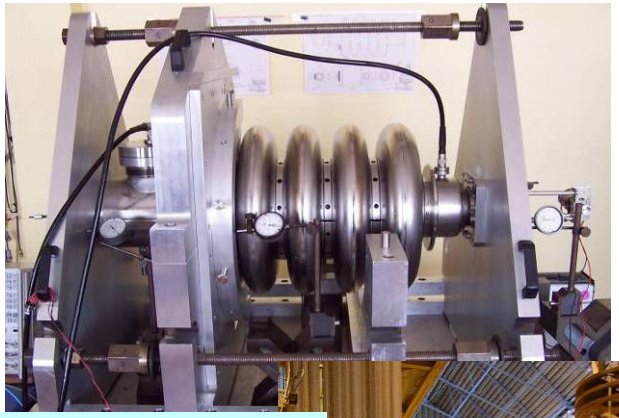

Tuning machine

RF Vertical Test

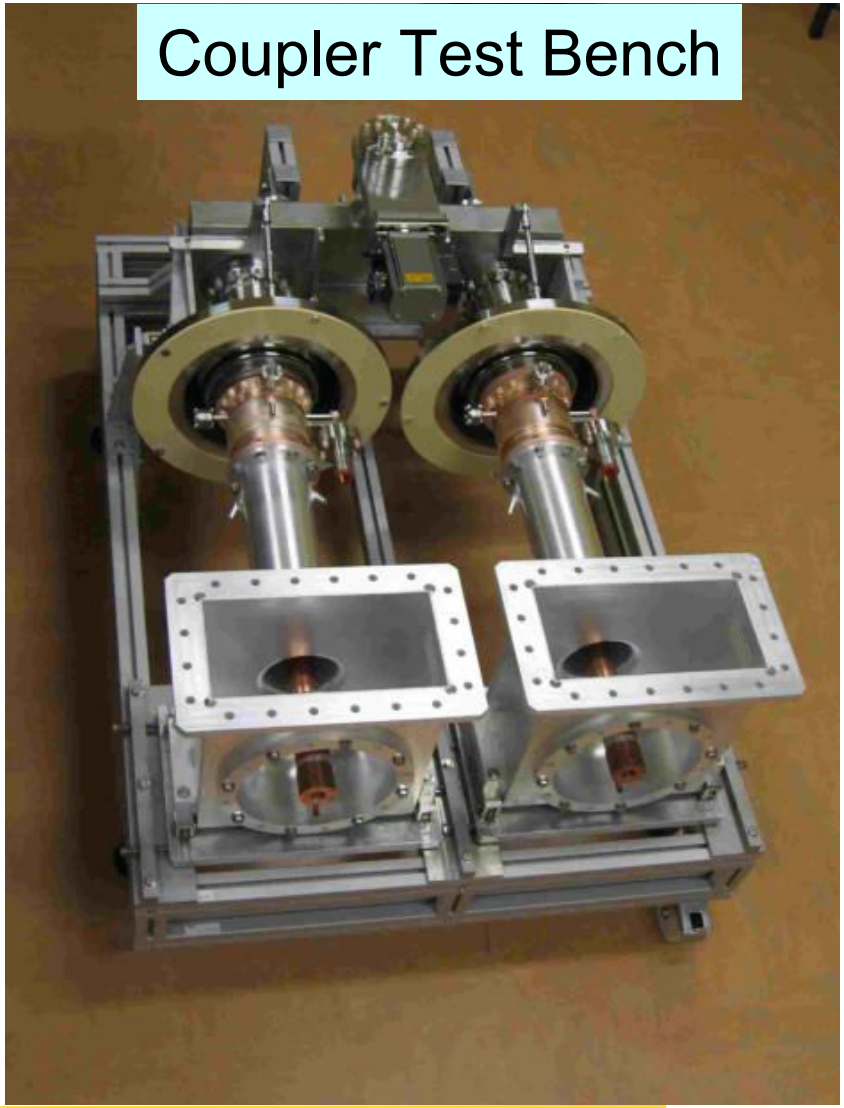

Coupler Test Bench

IFMIF-EVEDA: SC DTL (1st Cryomodule)

Acceleration of a 125 mA deuteron beam, from 5 MeV up to 9 MeV for EVEDA Phase and 40 MeV for IFMIF, at 175 MHz and 4.4 K

Cavity central region with accelerating field and frequency tuning system

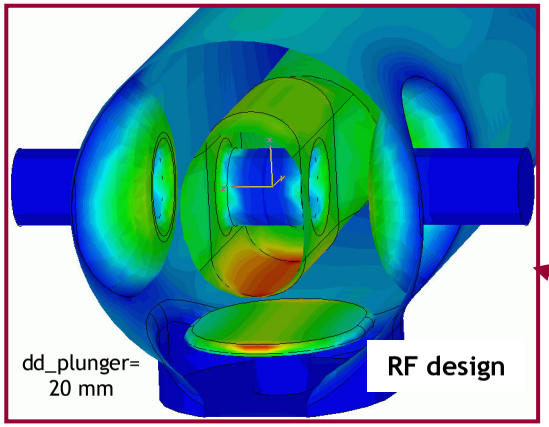

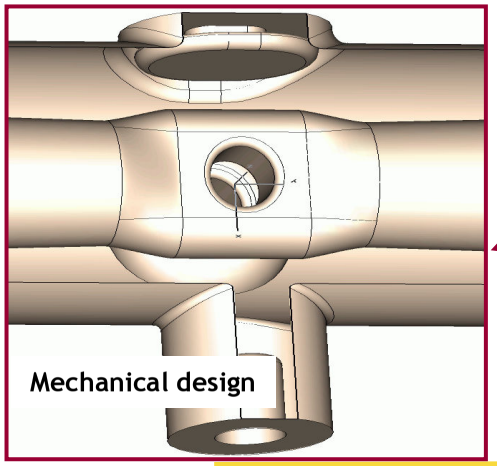

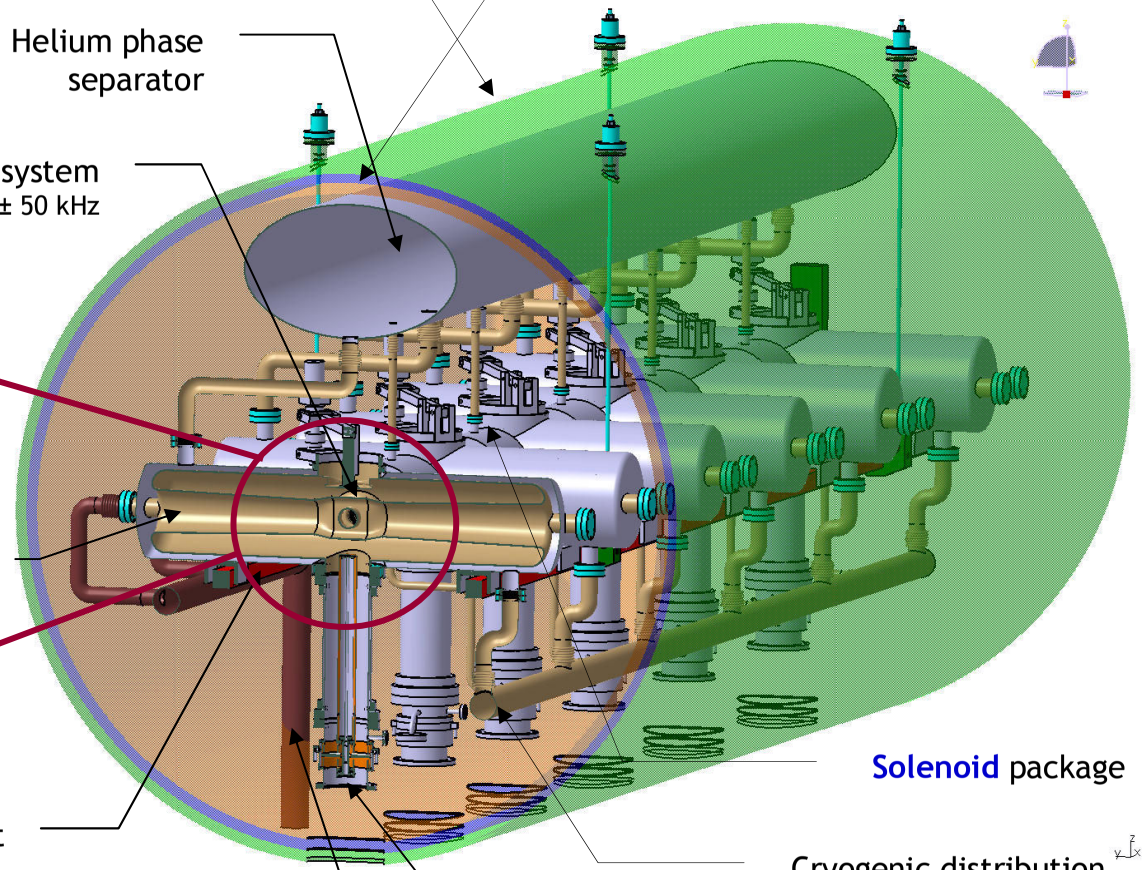

Overview of the Assembly Buildings

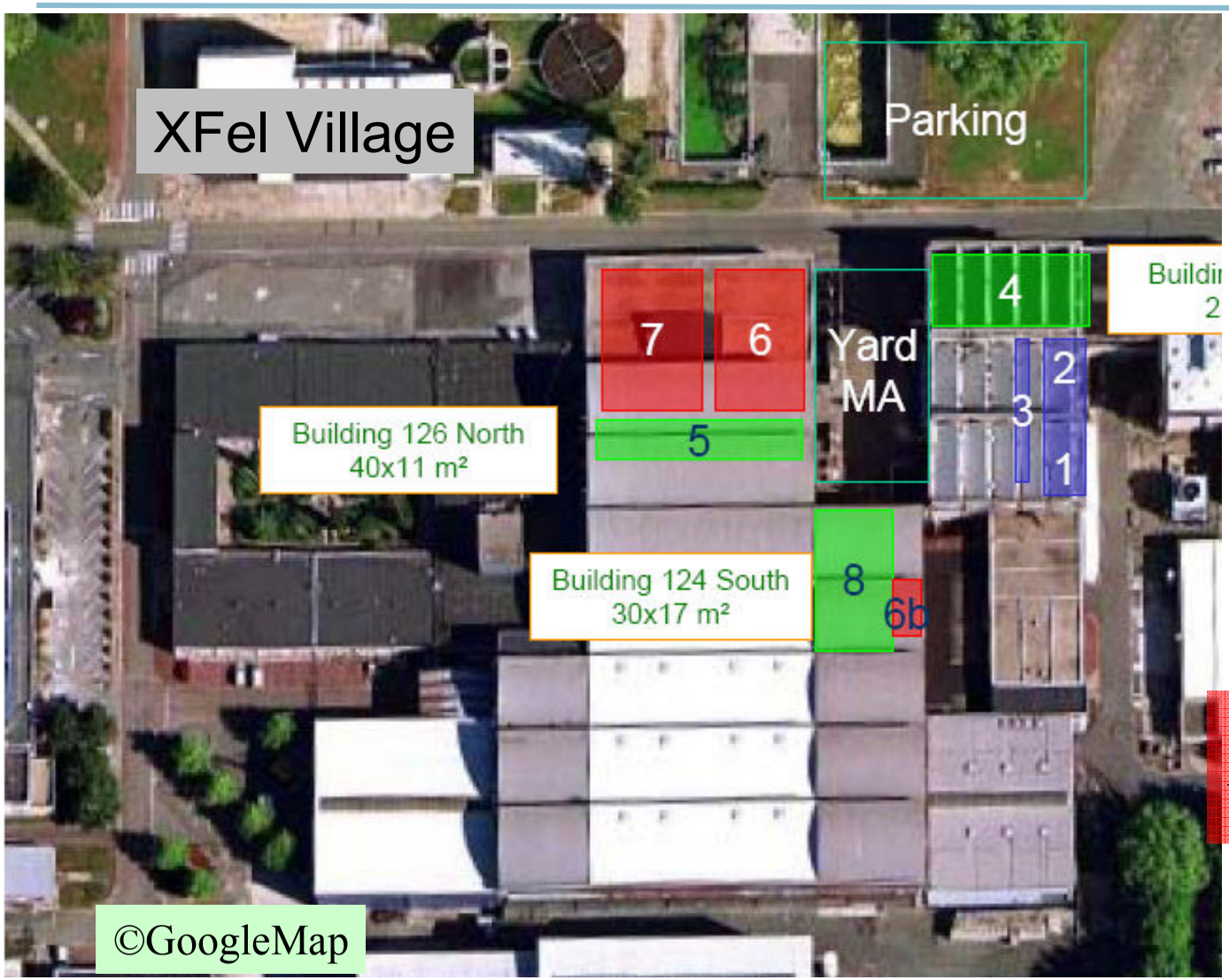

Clean rooms

Assembly halls

Offices Wharehouse

Overview of the Assembly Halls

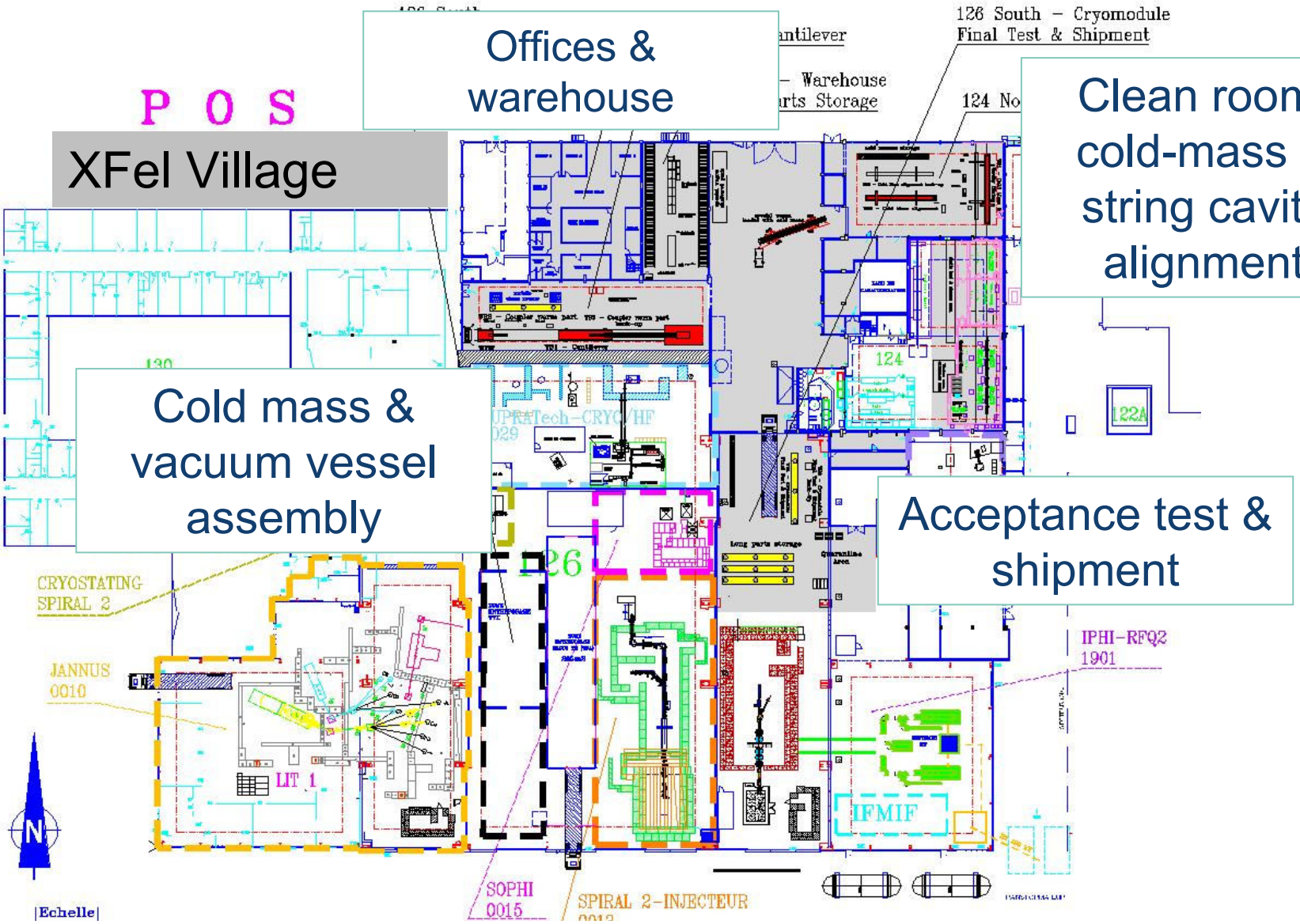

Organisation of the Assembly Halls

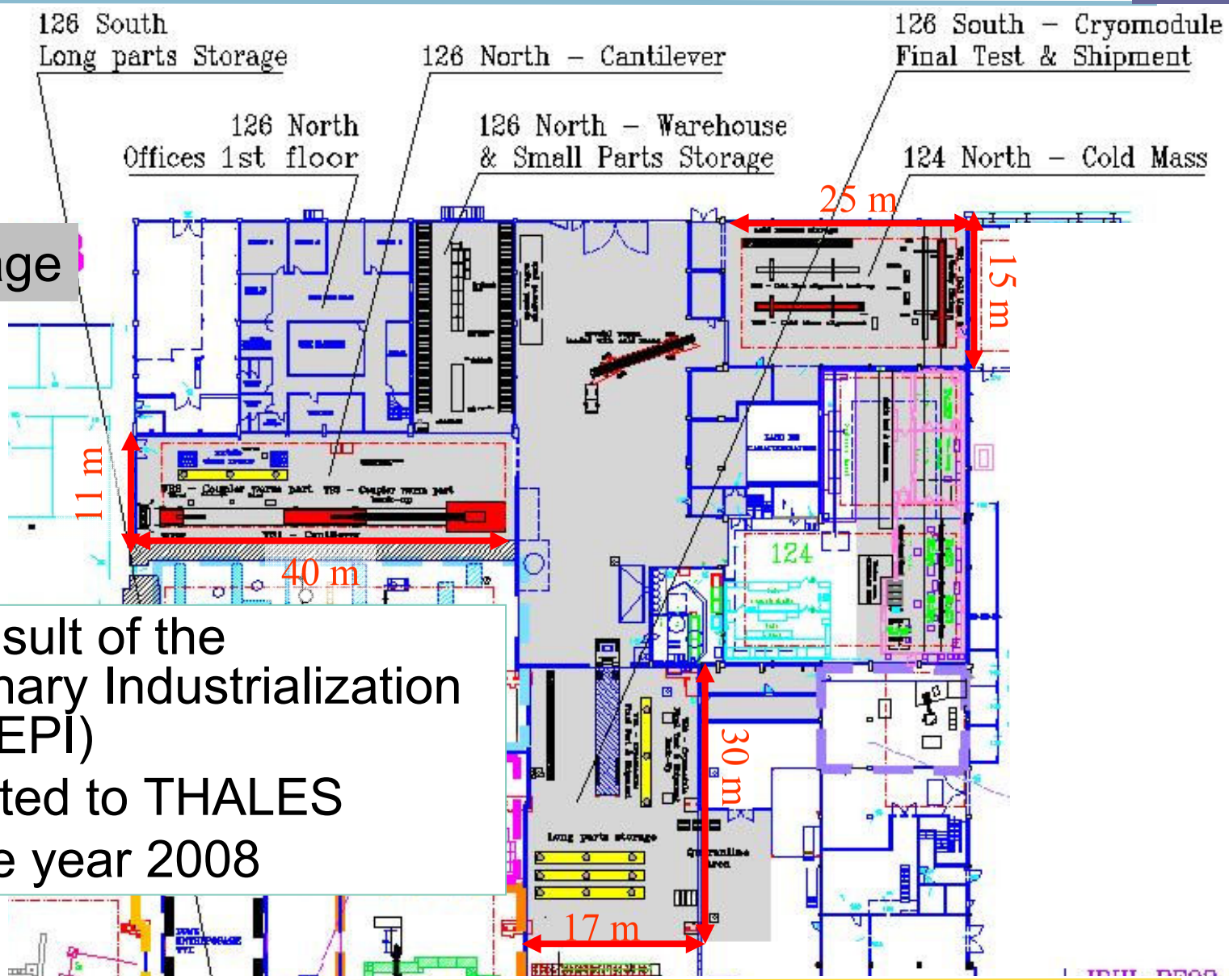

XFel Village

Main result of the Preliminary Industrialization Study (EPI) contracted to THALES over the year 2008

Organisation of Work Stations

1. **Clean Room Cold Coupler Area** (IS04-CC-WS1)
    - Cold coupler assembly
2. **Clean Room String Assembly Area** (ISO4-SA-WS1, ISO4-SA-WS2)
3. **Roll-out Area** (RO-WS1, RO-WS2)
    - HOM adjustment, magnetic shielding, tuners,…
    - 2Ph-tube welding, cold-mass/string assembly
4. **Alignment Area** (AL-WS1, AL-WS2)
    - Cavity string fine alignment
    - Coupler shields and braids, tuner electric tests
5. **Cantilever Area** (CA-WS1)
    - Welding of 4K and 70 K shield, superinsulation
    - Insertion in vacuum vessel
6. **Warm Coupler Area** (CO-WS1, CO-WS2)
    - Warm couplers
    - Quad current leads
7. **Shipment Area** (SH-WS1, SH-WS2)
    - Control operations (electrical, RF), “acceptance test”
    - Coupler pumping line
    - End-caps closing, N-insulation, loading.

Organisation of Work Teams

THALES Proposal: personnel attached to a WS

- **Clean Room** ISO4: 1 shift (2 teams x 2 technicians + 1 technician)
- **Clean Room** ISO567: 1 shift, 2 technicians
- **Roll-Out Area** : 2 shifts, 4 technicians
- **Alignment Area** : 2 shifts, 2 technicians
- **Cantilever + Coupler Area** : 2 shifts, 5 technicians
- **Shipment Area** : managed by warehouse personnel
- **General services** : 4 technicians (RF, warehouse, crane,…)

Remarks:

– The 2 shift concept is disputed: in Thales view, it is imposed by the number of working hours in Roll-Out Workstation. Big impact on the total cost, will be checked.

– All Workstations are doubled (but for the Cantilever): WS1 and WS2 used alternatively under normal operation, or with one backup WS when a problem arise (1 week buffer).

Overview of the Clean Room

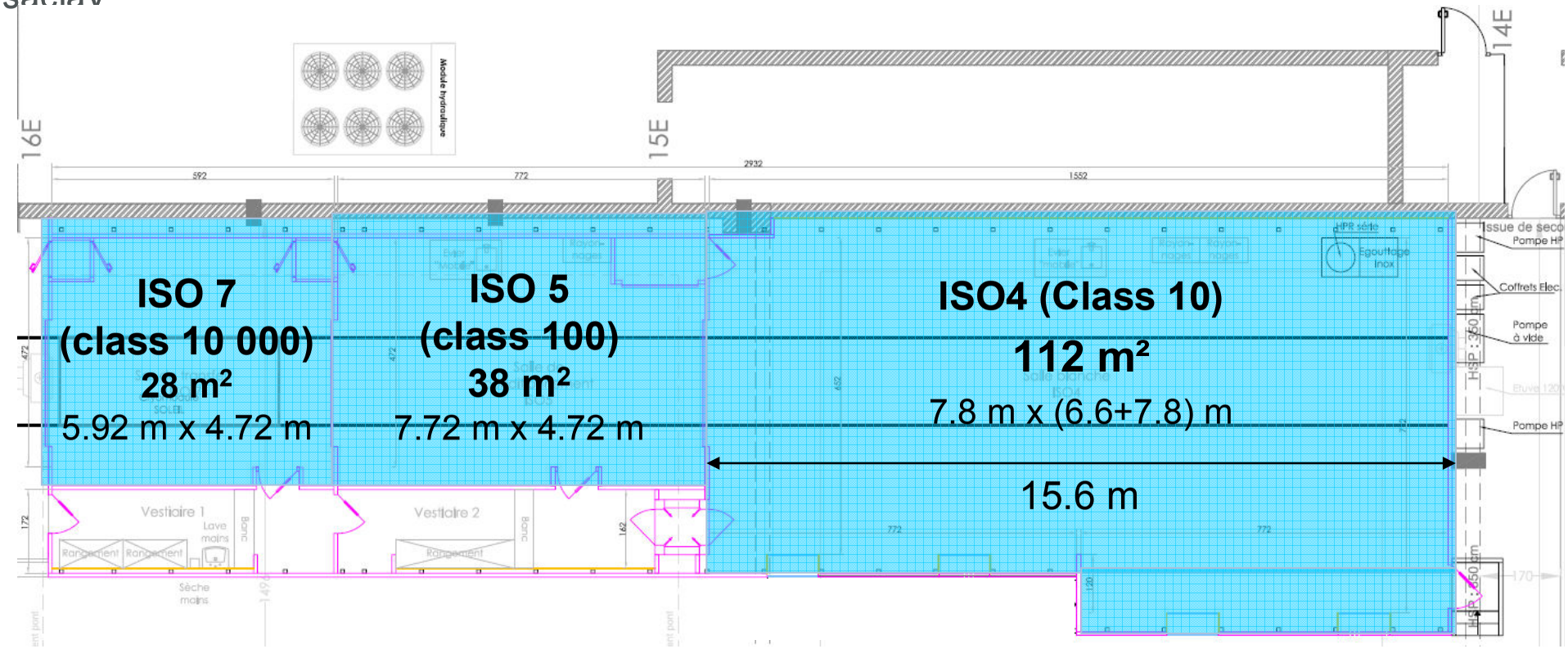

Clean Room : Civil Engineering

Clean Room : Washer-dryer

All cavities with He tank, coupler cold parts and quadrupole-BPM units will be cleaned and dried externally before entering ISO4 CR

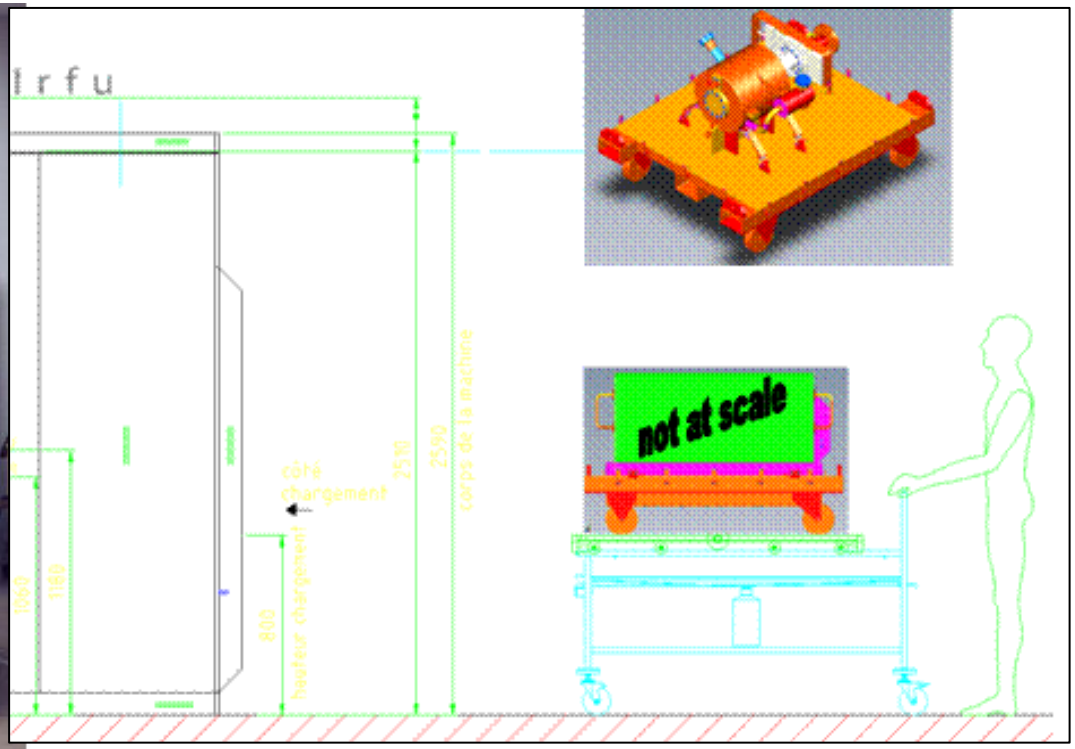

Objectives: avoid particle contamination of clean room from external envelopes

Clean Room : Work Stations

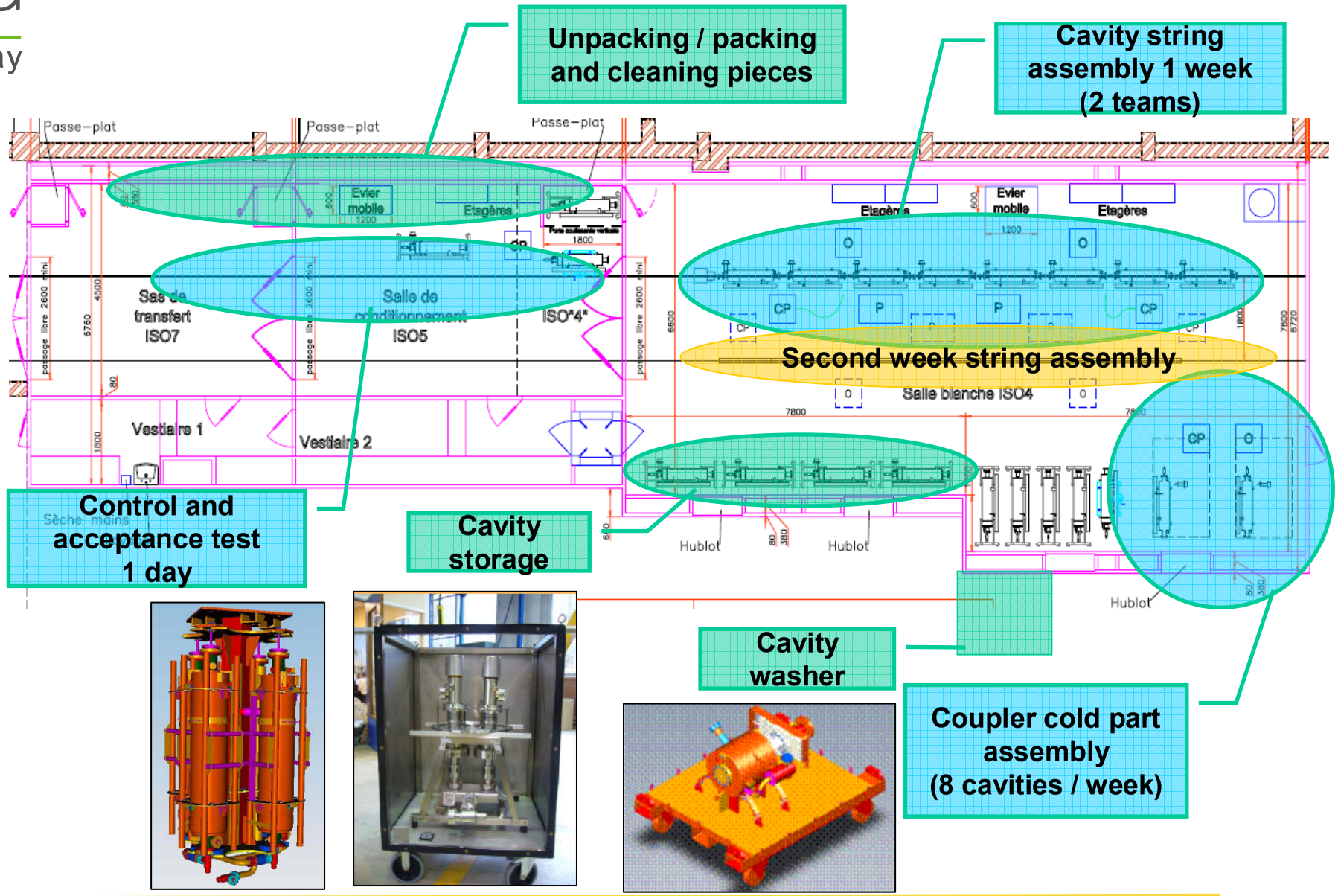

Clean Room : Railing System

2 double rail systems, adapted from Fermilab's clean room solution:
total length ~45 m, 39 anchors every 1.2m , alignment < 67 µrd

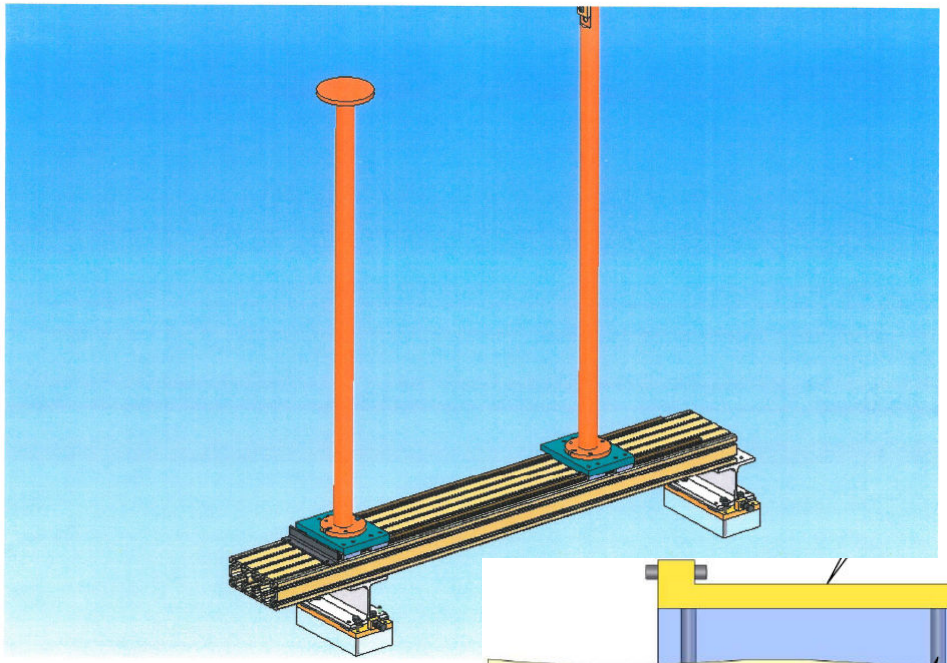

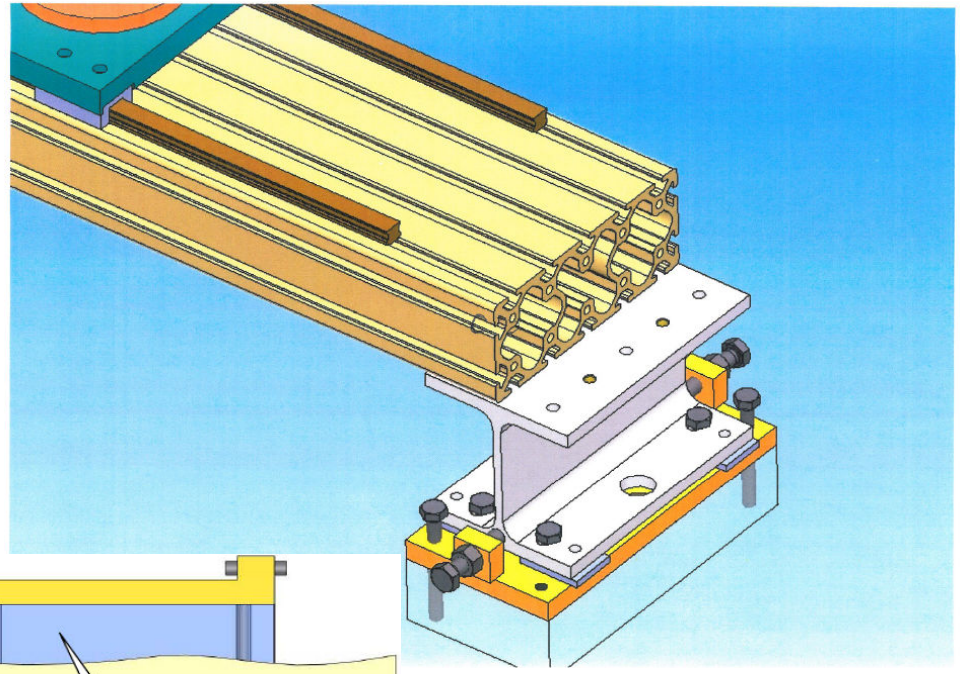

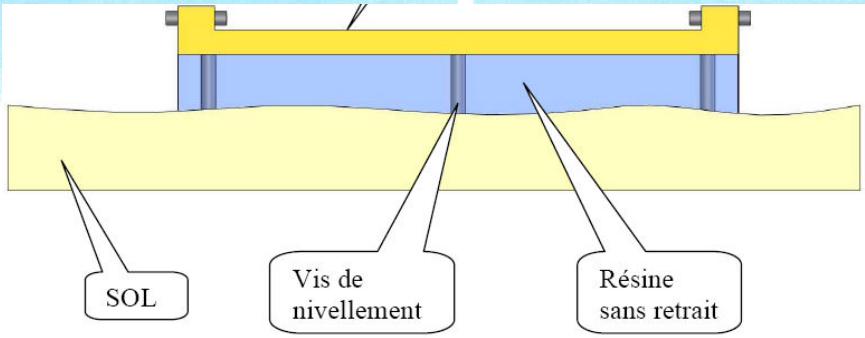

Objectives: ensure a good alignment of the cavities before connecting bellows
ensure a good stability of cavity string during roll-out

Clean Room Roll Out Area

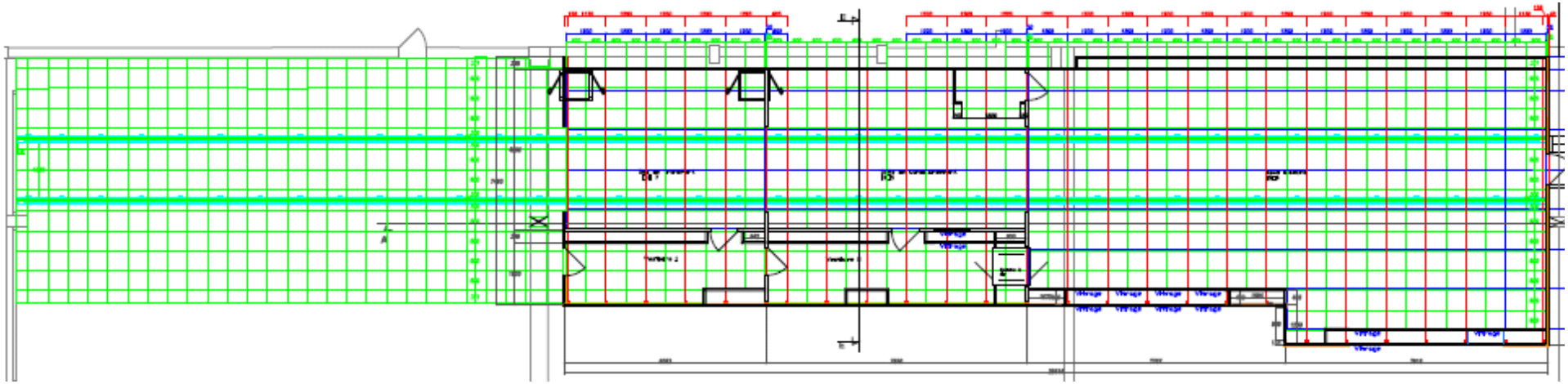

Rail axis are separated by 1.86 m

Roll-out and Alignment Areas

- String cavity and Cold mass assembly
- Cavity string alignment

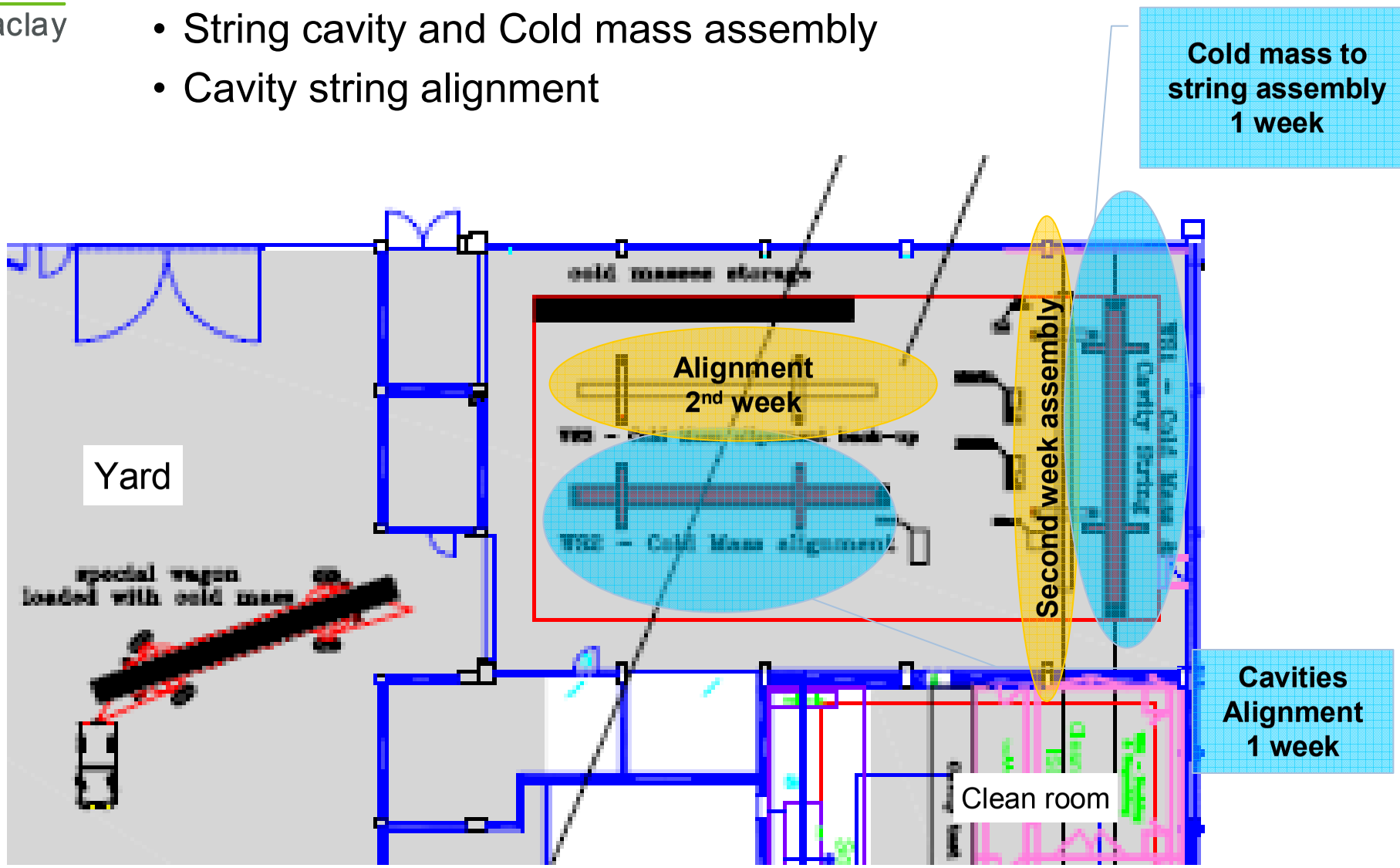

Cantilever and Warm Coupler Areas

- Cold mass to vacuum vessel to assembly
- Warm coupler part assembly

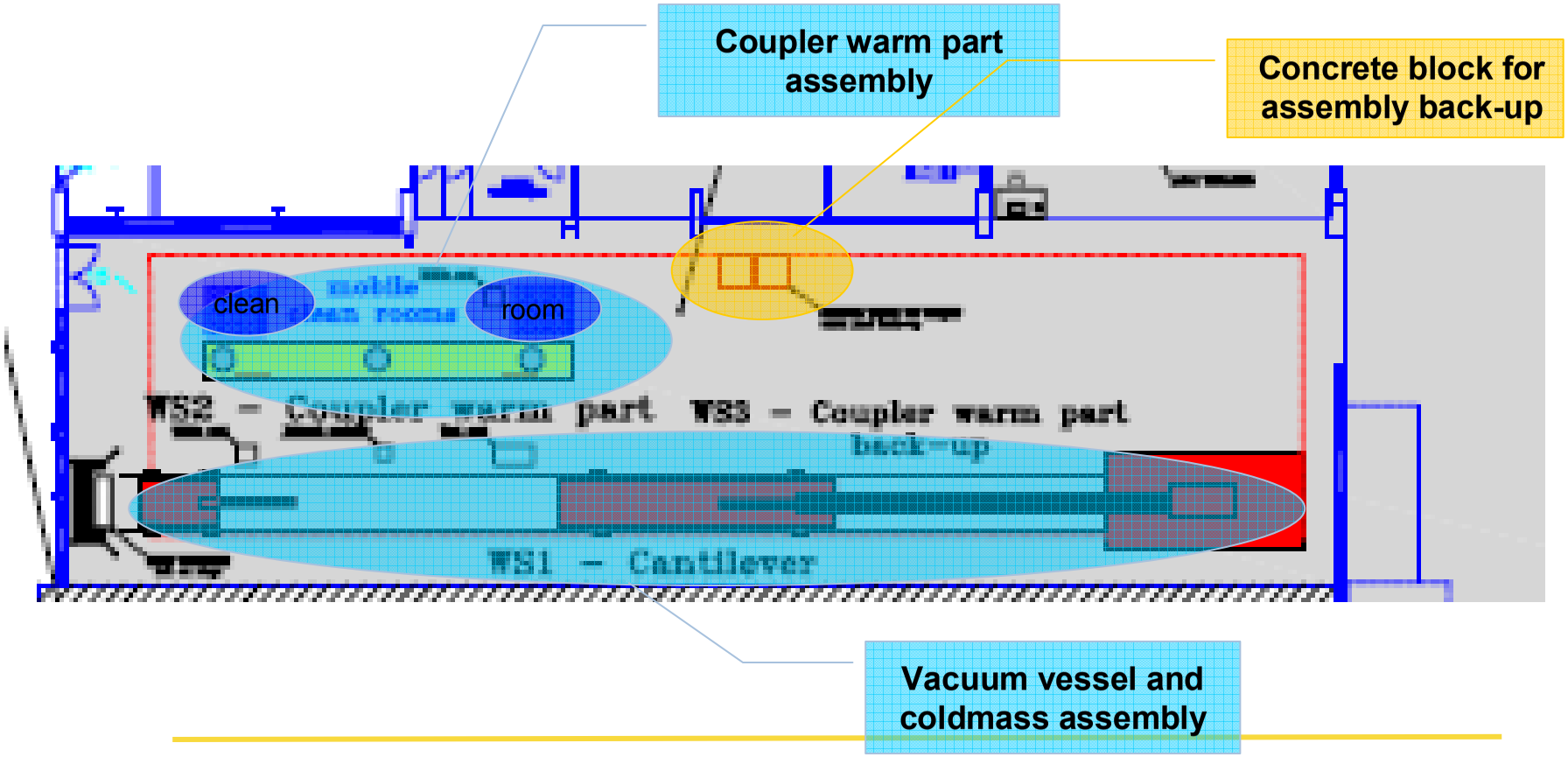

Pumping Linac and Shipment Area

- Couple pumping line
- Final controls and shipment

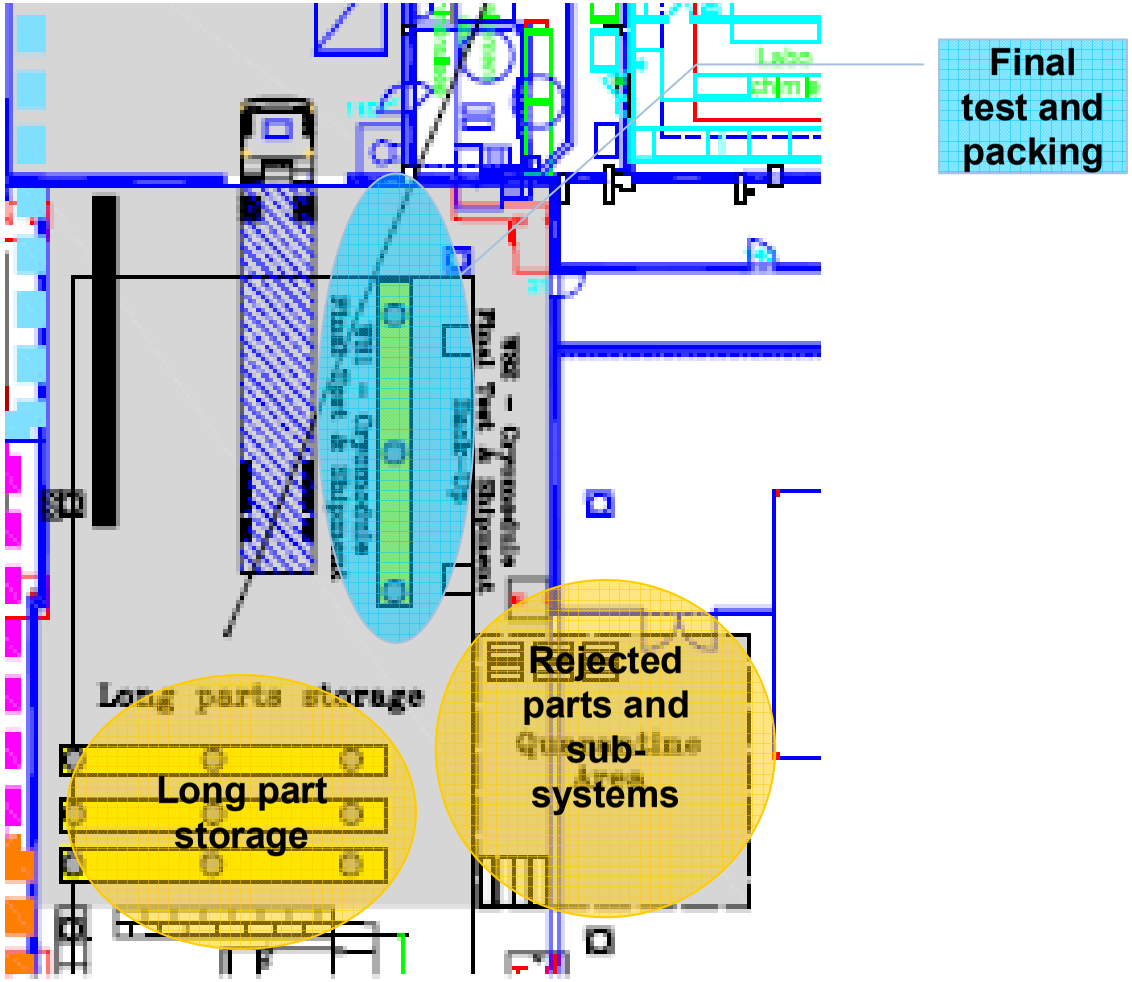

Cryomodule Traffic

Long Part Flow

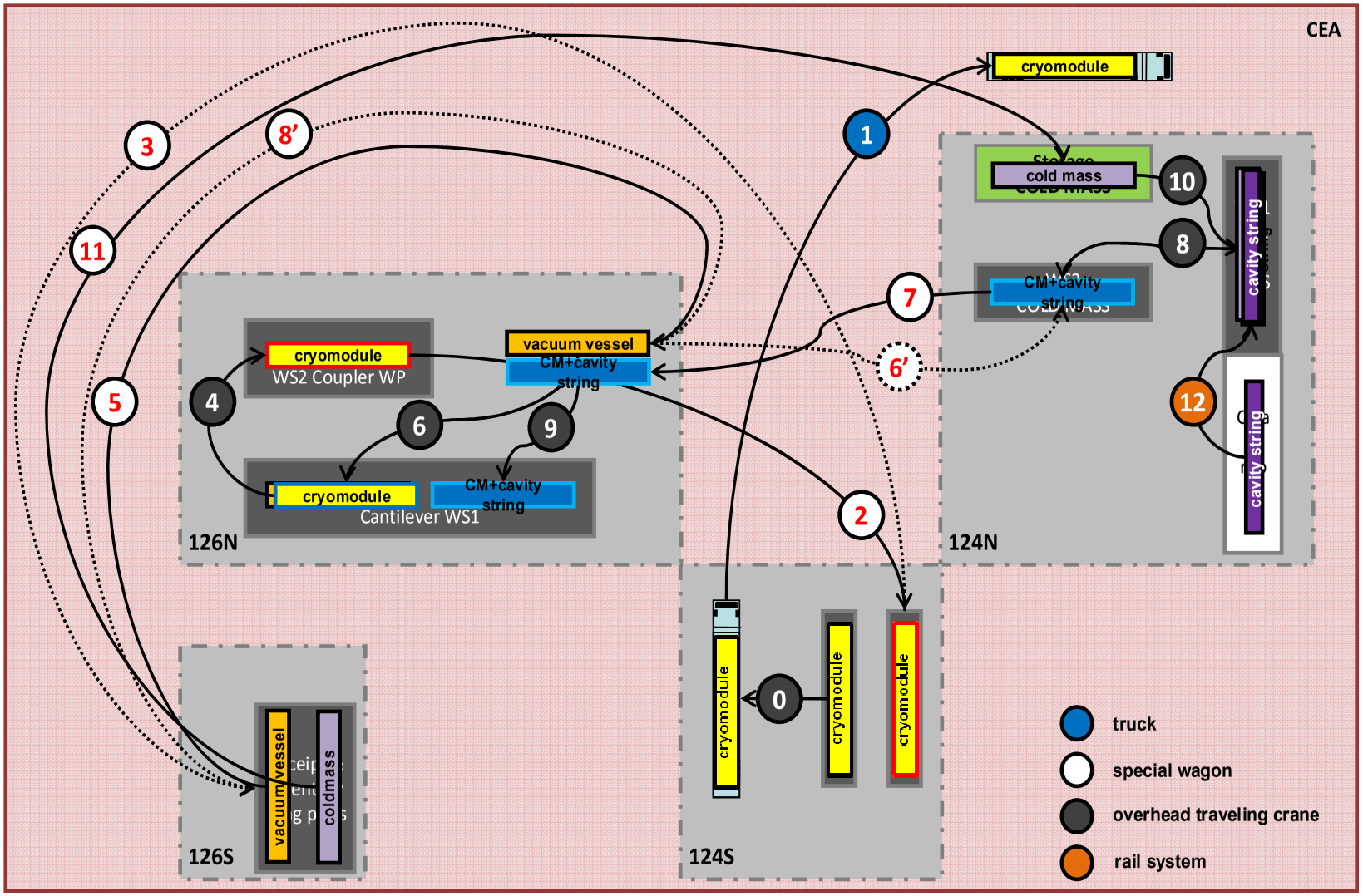

Truck Runaway

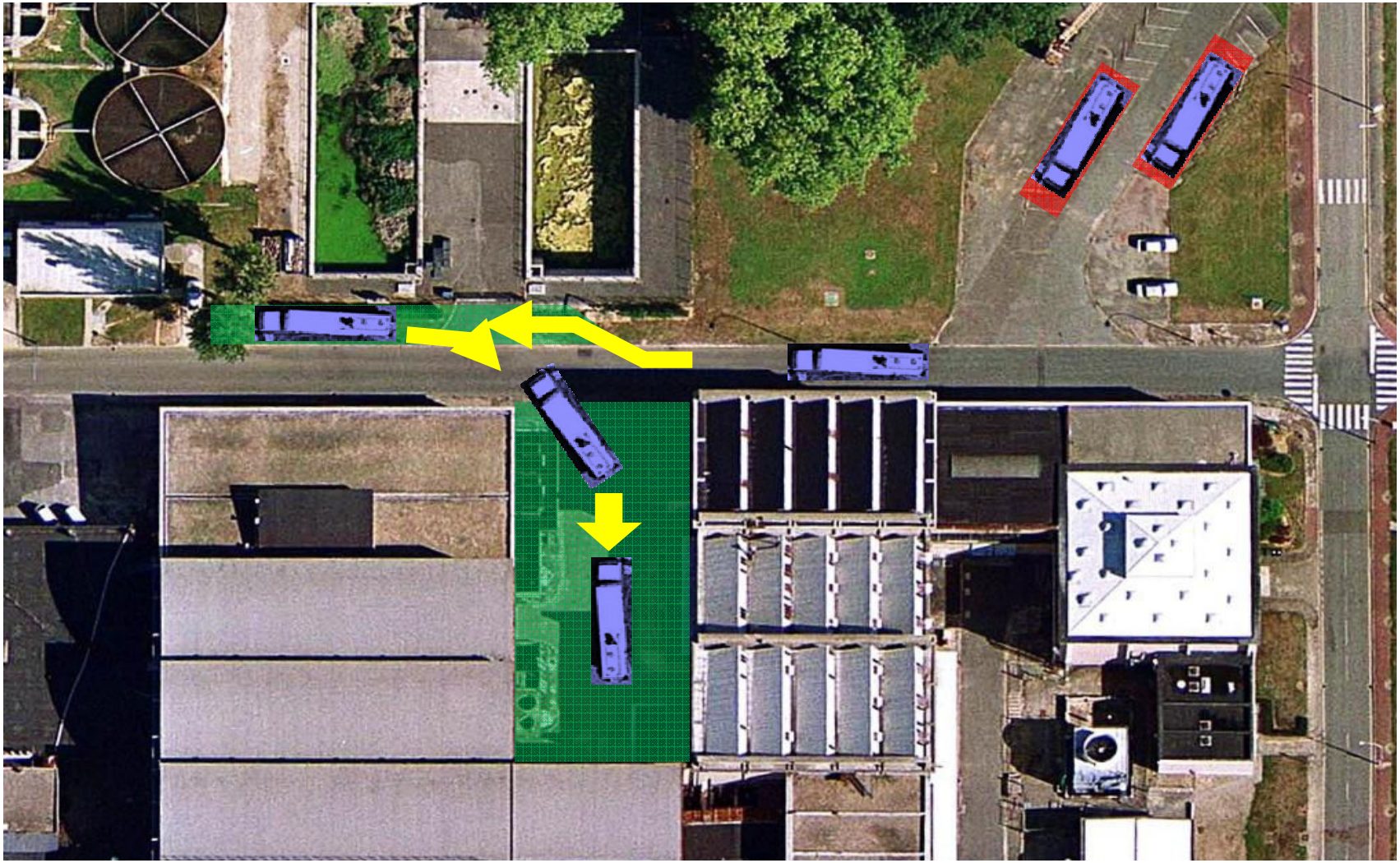

The **road system** adaptation have been submitted to CEA-Saclay site management.

Preparation Phase Study (2009-2010)

Civil engineering has started (~ 1M€ from “stimulus package”) ☺

Fabrication of Big Tools to start in March.

Detailed Industrialisation Study (EPPS) launched Q2/09

Call for tender for Cryomodule Cold Masses

Call for tender for Assembly Operations

Detailed Industrialisation Study (2009-2010)

Detailed Industrialisation Study at Saclay (EPPS) will be launched in March'09. It will include:

- Review of Saclay hall equipments and big tools
- Participation to Module 10-12 assembly at DESY
- Detailed study of the Clean Room tooling
- Update of the Assembly Industrial File (routing, tooling,...)
  - review of clean room pumping system
  - review of alignment systems
- Commissioning of Saclay infrastructure with 2 module prototypes (starting Q3-2010)
- Control Operations
- QA plans and Risk Analysis
- Specifications for ERP (Entreprise Resource Planning)
- New cost estimate

Nomenclature of Big Tools

Tooling	Number	Spare	Drawings	Modifications
Assembly Girder 1	1 for qualification 2 for production (WS1, WS2)	1	DESY INFN, drawing of DESY can be simplified	- 8 pillars - 1.8 m width (2.1 m) - motorization (up OK, down ?) - check orientation - centre of mass adjustment
Pillars 2	2x4 for alignment stations	0	DESY	
Wagon	1, no frame for the vacuum vessel and the cold mass (for cryomodule ?)	1 simple carriage	FNAL	new design needed, damping frame with 4 pillars
Cantilever 3	1	-	INFN, DESY drawing under review	- motorization, or wheel on small car - no stopper
Local clean room 4	2	-	-	
Concrete stands (+ dampers)	2	2		
Cap insertion cart	2	1	no	new
Loading girder 5	1 (chains can be used in Cantilever area)	1	no, design of DESY can be simplified	- centre of mass adjustment - call for tender using 3D model
Welding bladder 6	1	1	no	-

4

1

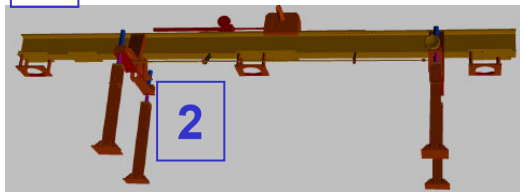

2

3

5

6

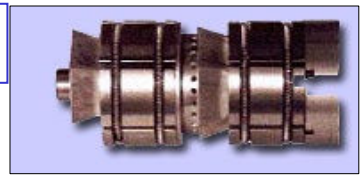

Assembly Schedule at Saclay (Feb.08)

Conservative schedule:

→ 12 months for operation/training on 2 module prototypes

→ 3 pre-series module-assembly in sequence awaiting full RF validation at CMTB

→ first 5 series module-assembly at the rate of 1 / fortnight

N°	Task Name
186	**at Saclay**
187	**Preparation assembly facility**
188	civil construction assembly halls
189	ordering assembly "big tools" by CEA
190	Commissining "big tools"
191	invitation CFT module assembly for WP3 and 9
192	CFT module assembly WP3 and 9
193	allocation of the assembly contract
194	assembly team available WP3 and 9
195	prototype assembly qualification WP3 and 9
196	**string and module assembly training**
197	initial training of news assembly teams
198	1st dis- and re-assembled of prototype module #1
199	CMTB test re-assembled prototype #1
200	2st dis- and re-assembled of prototype module #1
201	CMTB test re-assembled prototype #1
202	1st dis- and re-assembled of prototype module #2
203	CMTB test re-assembled prototype #2
204	2st dis- and re-assembled of prototype module #2
205	CMTB test re-assembled prototype #2
206	**XFEL preseries modules**
207	pre-series module #1
208	first pre-series string ready
209	pre-series module #2
210	second pre-series string ready
211	pre-series module #3
212	third pre-series string ready
213	**XFEL series modules**
214	start module assembly with rate 0.5 module / week
215	series module #1
216	transport module #1
217	series module #2
218	transport module #2
219	series module #3
220	transport module #3
221	series module #4
222	transport module #4
223	series module #5
224	transport module #5
225	start module assembly with rate 1 module / week
226	series modules 6-101

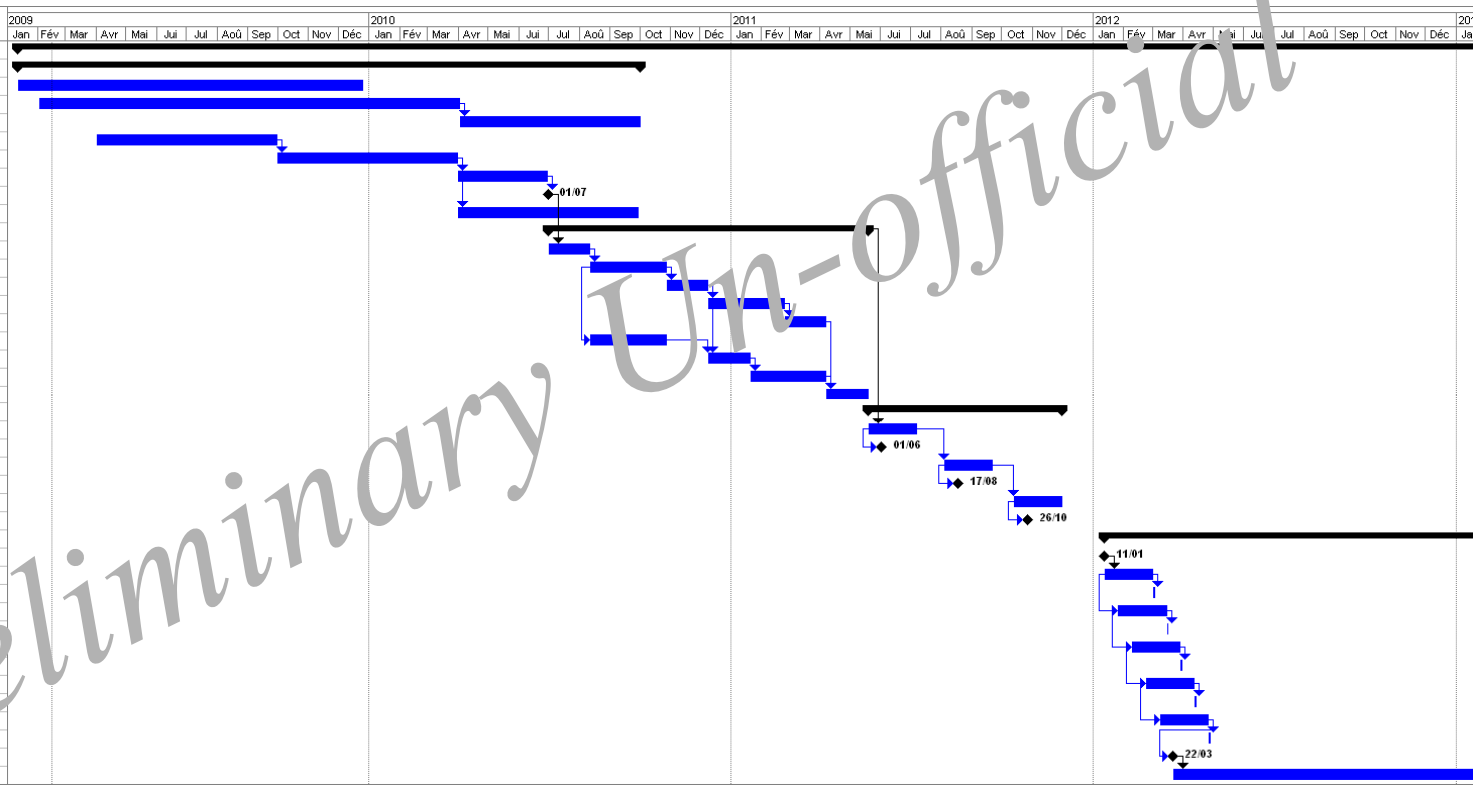

Preliminary Un-official

CEA-Saclay Milestones for WP3 - WP9

Module assembly industrial contract (WP3 and WP9)

01/04/2009: invitation for tender
01/10/2009: call for tender (technical specs, ask for cost estimate)
01/04/2010: allocation of contract
01/07/2010: date expected for Company people available at Saclay

Preparation assembly halls all 2009 (WP3)

01/01/2009: beginning of the civil engineering work
31/12/2009: delivery of the halls

Fabrication of big tools (WP3)

Q1 2009: call for tender
Q1 2010: delivery and installation
Q2 2010: commissioning by Saclay experts
Q3 2010: commissioning by Company experts

Prototype assembly qualification (WP3 and WP9)

Q3-Q4 2010: disassembly and assembly of 2 modules

Product Breakdown Structure

- The elaboration of a **PBS** was proposed at the "XFEL Collaborative Workshop" as one responsibility of WP03 + WP09.

- It would fulfil two purposes:

1) Provide the whole Cold Linac collaboration(+WP17) with a UNIQUE REFERENCE FILE which:

a) describes the COMPLETE and ORGANIZED list of parts of the cryomodule as it will be installed in the XFEL tunnel,

b) IDENTIFIES the WP RESPONSIBLE to provide each part;

2) Provide Saclay assembly QC team with a file which describes the cryomodule as shipped from Saclay:

a) the number of parts and their origin,

b) the temporary parts/tooling (e.g. supports, clamps, fastenings, etc...)

Product Breakdown Structure

- The first distributed version (V3) has been constructed from the cryomodule IDEAS 3D model tree structure provided by C. Engling:

```
Bill of Materials for

     Name:            Cryomodul_Typ_XFEL
     Type:            ASSEMBLY
     Part #:          D00000000550043
     Version:         64
     Revision:
     Description:

     Date:               17/12/2008
```

Product Breakdown Structure

At Level 2 :

- the first two lines are inherited from the IDEA Model
- the next 4 lines have been added based in information from Kay's and Serge's files

Product Breakdown Structure															Provided by WP	
# parts	Lev 1	Lev 2	Lev 3	Lev 4	Lev 5	Lev 6	Lev 7	Lev 8	Lev 9	Lev 10	Lev 11	EDMS N°	Type	English	suggested by CEA	suggested by WPLdrs
XFEL - CRYOMODULE as INSTALLED in TUNNEL																
1	Cryomodul_Typ_XFEL											D00000000550043	ASSEM		03;04;05.06;07;08;09;11;17;3	
1		ColdMass_and_VacuumVessel_XFEL										D00000000550253	ASSEM	ColdMas	03;06;32;?	
1		Cavity-String_XFEL										D00000000549963	ASSEM		03;04;05.06;07;08;09;11;17	
1		Feedthrough-cables-sensors											NA		05;06;07;17	
1		Copper braids											NA		03	
1		Spacer-Superinsulation											NA		03	
1		Identified missing parts											NA		?	

N.B. IDEAS generates a Space Coordinate line « BO_... » which can be ignored by the PBS.

Product Breakdown Structure

# parts	Lev 1	Lev 2	Lev 3	Lev 4	Lev 5	Lev 6	Lev 7	Lev 8	Lev 9	Lev 10	Lev 11	EDMS N°	Type	English	suggested by CEA	suggested by WPLdrs
1	Cryomodul_Typ_XFEL											D00000000550043	ASSEM		03;04;05.06;07;08;09;11;17;3	
1		ColdMass_and_VacuumVessel_XFEL										D00000000550253	ASSEM	ColdMas	03;06;32;?	
1			BO-Coldmass_VacuumVessel_XFEL									D00000000611742	PART		NA	
1			Kalte_Masse_XFEL									D00000000550263	ASSEM	Cold_Ma	03	
1			Vakuumbehaelter_incl Balg kpl_XFEL									D00000000549873	ASSEM	Vacuum_	03;06;32;?	
1		BO-Cryomodul										D00000000366599	PART		NA	
1		Cavity-String_XFEL										D00000000549963	ASSEM		03;04;05.06;07;08;09;11;17	
1			BO-Cavity-String									D00000000301690	PART		NA	
1			BPM_VAT_XFEL									D00000000636603	ASSEM	BPM_an	08;17	
1			2Ph_Leitung_Titan									D00000000610843	ASSEM	2Ph_Pip	03;04	
1			VAT_Lagerung_Quadseite_XFEL									D00000000559183	ASSEM	VAT_Ga	03	
1			VATSchieberModul_XFEL									D00000000550003	ASSEM	VAT_Ga	08	
1			VAT_Lagerung_Cavityseite_XFEL									D00000000562843	ASSEM	VAT_Ga	03	
1			Balggruppe_Cavityverb_asm_XFEL									D00000000604323	ASSEM	Bellows_	08	
1			Quad_Modul_XFEL									D00000000591853	ASSEM	Quad_M	11;03	
1			Verbindung_Strahlrohrkomponenten									D00000000610963	ASSEM	Connexi	09	
1			Cavity_String_XFEL_BO									D00000000617583	ASSEM	Cavity_S	03;04;06;07	
1			Koppler_XFEL_sys									D00000000560763	ASSEM	Coupler	05	
1		Feedthrough-cables-sensors											NA		05;06;07;17	
1			Feedthroughs												06;?	
1			Cables										NA		05;06;07;17	
1			Sensors												03;05	
1		Copper braids											NA		03	
1			thermalisation to 70K										NA		=	
1			thermalisation to 4K										NA		=	
1		Spacer-Superinsulation											NA		03	
1			Spacer-1200m2										PART		=	
1			Superinsulation for cold mass-1200m2										PART		=	
8			Superinsulation for one cavity-???m2										PART		=	
8			Superinsulation for 2Ph pipe-???m2										PART		=	
1		Identified missing parts											NA		?	
8			O-ring seal NW200 with support ring for main coupler										PART		?	
			Copper braid fastenings										ASSEM		?	
			Module interconnection parts within sliding sleeve										ASSEM		?	

Product Breakdown Structure

A lot of work is needed to transform this PBS into a useful tool for the XFEL work organisation

• **BIGGEST challenge** :
Obtain the **feedback** from **WP leaders** and then a **consensus** to IDENTIFY the WP responsible to provide each part.

• Remaining work
- organize configuration changes and PBS versions
- organize the EDMS insertion
- include English translation
- include drawing references and links
- include 3D model links
- reduce the number of lines (e.g. VAT valves ≈ 20 lines)

I hope that DESY/EPP can help us on these issues.

Module 8 Transportation Test

Schedule:

- **03 Nov. 2008 departure from DESY**
- **04 Nov. 09 at CEA** (~24h trip):

8:25	Arrival at CEA
10:00 – 10:45	Uploading the frame from the trailer
11:05	Disconnecting of the cables
13:45 – 13:50	Lift M8 out of the frame down to concrete stand

- **05 Nov. 2008 departure from CEA**

  About 150km north of Paris the truck has a technical incident and need to be towed away from the highway with the trailer. At night the truck-company sent a new truck from Hamburg to Paris to pickup the trailer with M8. Truck change operations were smooth and did not produce critical impacts on the module.

- **07 Nov. 2008** : because of the incident M8 arrived one day later at Desy.
- **05 Dec. 2008: Start cool down of M8 on CMTB**
- **09 Dec. 2008: M8 RF-tests, test and measuring on the cold magnet**
- **Week 3, 2009 : removal of M8 from CMTB scheduled**

Module 8 at CEA-Saclay

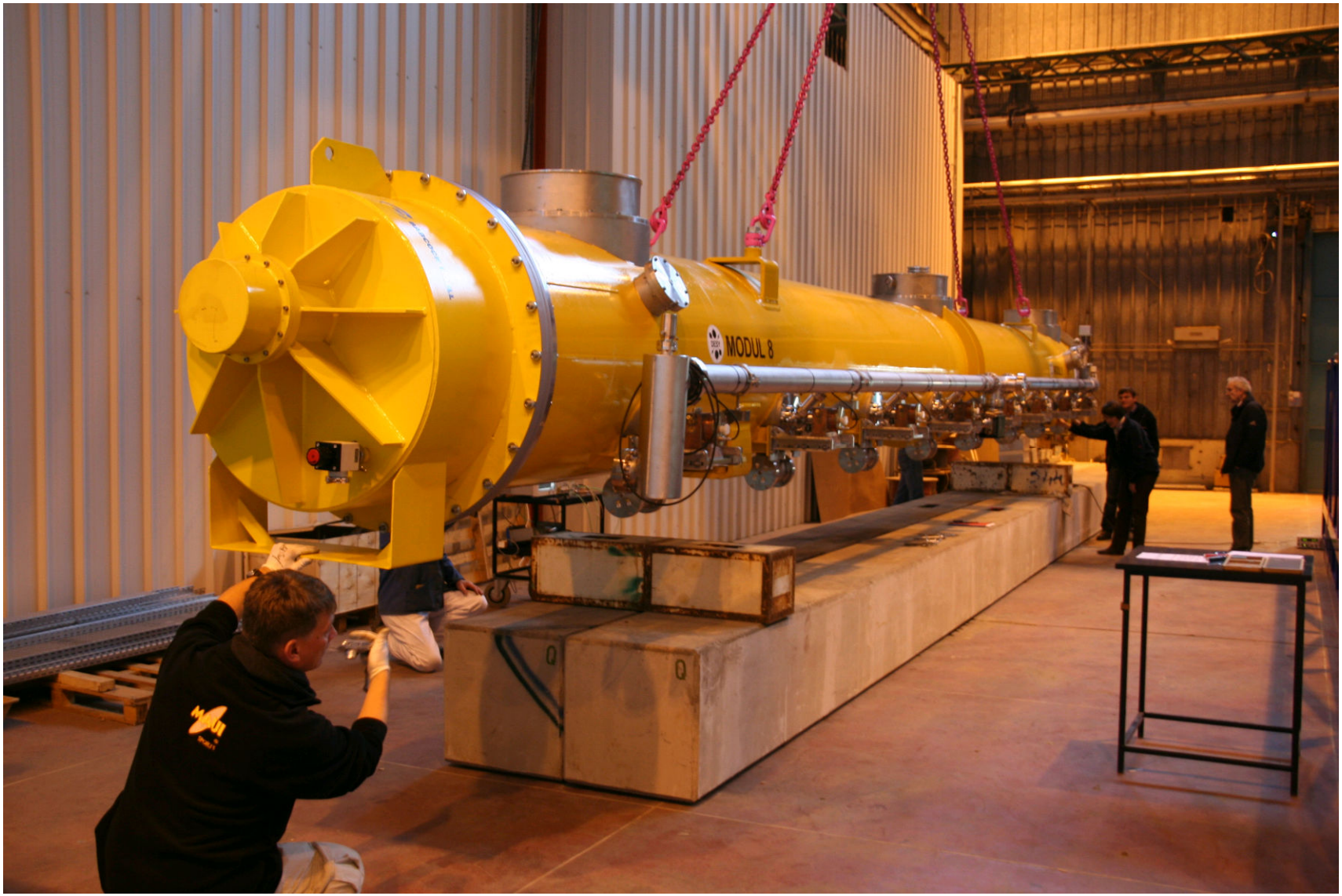

Vacuum Vessel Caps

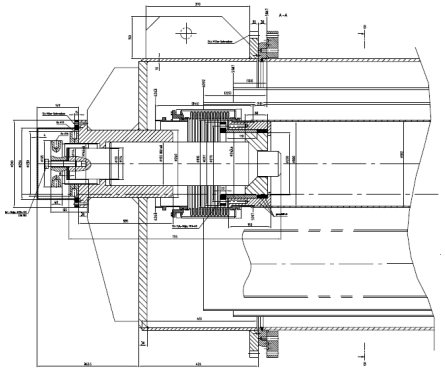

Feed-cap side

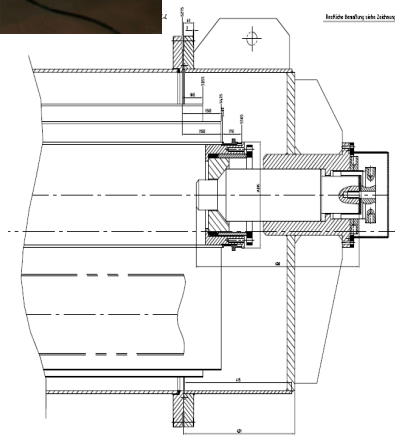

End-cap side

Data acquired

- Couplers: monitoring antenna shorts
- Vacuum gauges: 2 for the cavity vacuum, 2 for the coupler vacuum
- 3 geophones installed in M8 monitoring vibrations on magnet and cavity n°4; 1 geophone installed on the damped transporting frame
- 2 GP1 recording accelerometers monitoring inner (damped) and outer (fixed) frame vibrations during transportation.
- 2 accelerometers with data logger (MoniLog measurement system) have been installed by Accel on the inner and outer supporting frame.

Configuration of monitoring equipment

MoniLog measurement system (ACCEL)

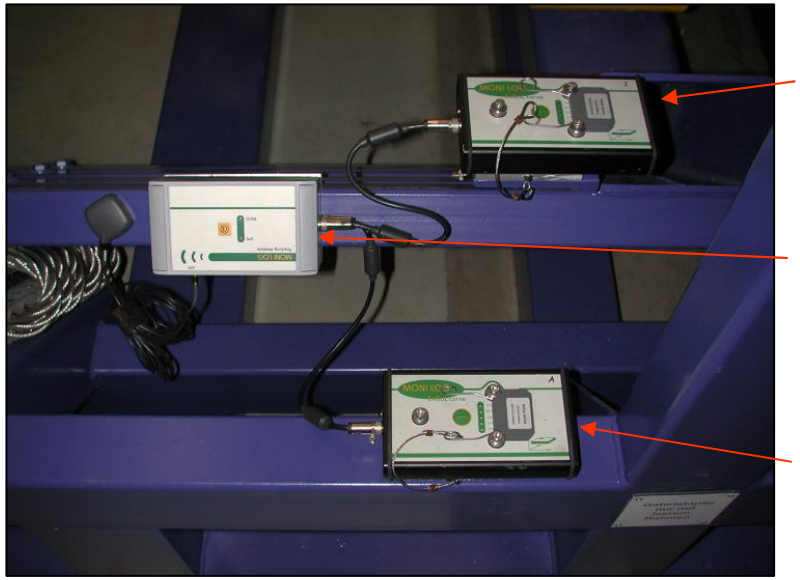

Data-logger inner frame (Module)

GPS-Module

Data-logger outer frame (trailer)

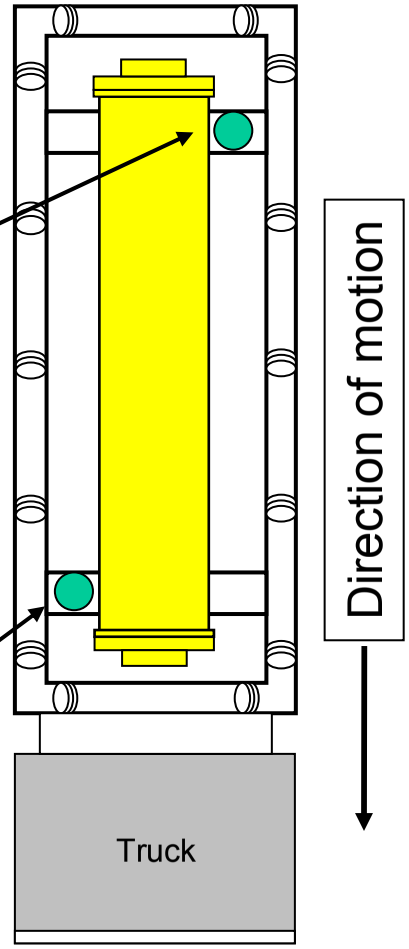

Geophone, ACC-Sensor, vacuum gauges and short circuit measurement on the main coupler

equipped by INFN-Mi

Data acquisition system

- The GP1 recording accelerometers are stand alone, self powered devices and need no data acquisition system.

- A DataQ DI-710 UHS Stand Alone USB Data Logger System has been used to record:
  - vacuum gauges signals (4 single ended channels)
  - geophone signals (4 single ended channels)
  - coupler short signals (8 single ended channels)

- Data Logger characteristics:
  - 16 single ended analog input
  - 180 Hz sampling rate for channel
  - Data storage on SD card

“Standard” monitoring system on frame

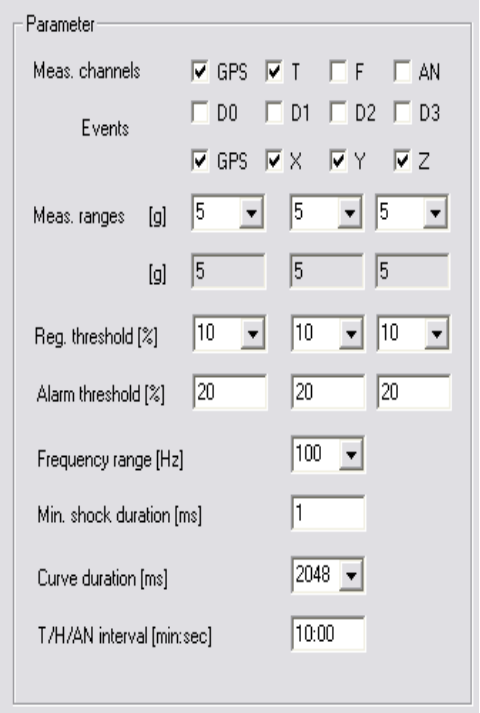

*1
*2

GPS-Module

		Hamburg - Saclay		Saclay - Hamburg	
		inside frame	outside frame	inside frame	outside frame
*1	Record	0,5 g	2,0 g	0,5 g	1,0 g
*2	Alarm	1,0 g	2,0 g	1,0 g	1,5 g

Route of the M8 transportation

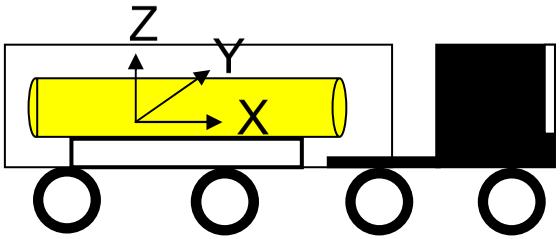

Saclay to Hamburg

Zmax= 1,424 g

ACCEL, inside frame

Hamburg to Saclay

Zmax= 1,11g

ACCEL, inside frame

From Hamburg to Saclay the tour was observed over the whole time of 24h

Acceleration summary

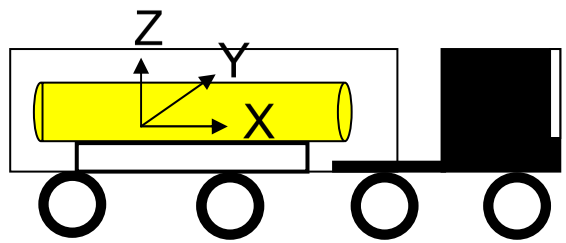

ACCEL DATA LOGGER

	Hamburg - Saclay					
	inside frame			*outside frame*		
	aX [g]	aY [g]	aZ [g]	aX [g]	aY [g]	aZ [g]
max value	0,549	0,625	1,11	no datas		
min. value	-0,589	-0,584	-1,182	Limitation was set to high (2g)		

	Saclay - Hamburg					
	inside frame			*outside frame*		
	aX [g]	aY [g]	aZ [g]	aX [g]	aY [g]	aZ [g]
max value	0,554	0,862	1,424	0,5	1,265	1,935
min. value	-0,471	-0,872	-1,299	-0,428	-1,37	-1,251

INFN GP1 ACCELEROMETERS

	Hamburg - Saclay					
	inside frame			*outside frame*		
	aX [g]	aY [g]	aZ [g]	aX [g]	aY [g]	aZ [g]
max value	0,62	0,77	1,49	1.32	0,86	2.19
min. value	-0,22	-0,39	0,49	-0,54	-0,75	-0.21

	Saclay - Hamburg					
	inside frame			*outside frame*		
	aX [g]	aY [g]	aZ [g]	aX [g]	aY [g]	aZ [g]
max value	0,39	0,47	1,46	0,55	0.78	2.33
min. value	-0,29	-0,44	0.48	-0,66	-0.63	-0.04

Frequency domain analysis

Spectrograms of the geophone data recorded while the truck was running from Hbg to Saclay.

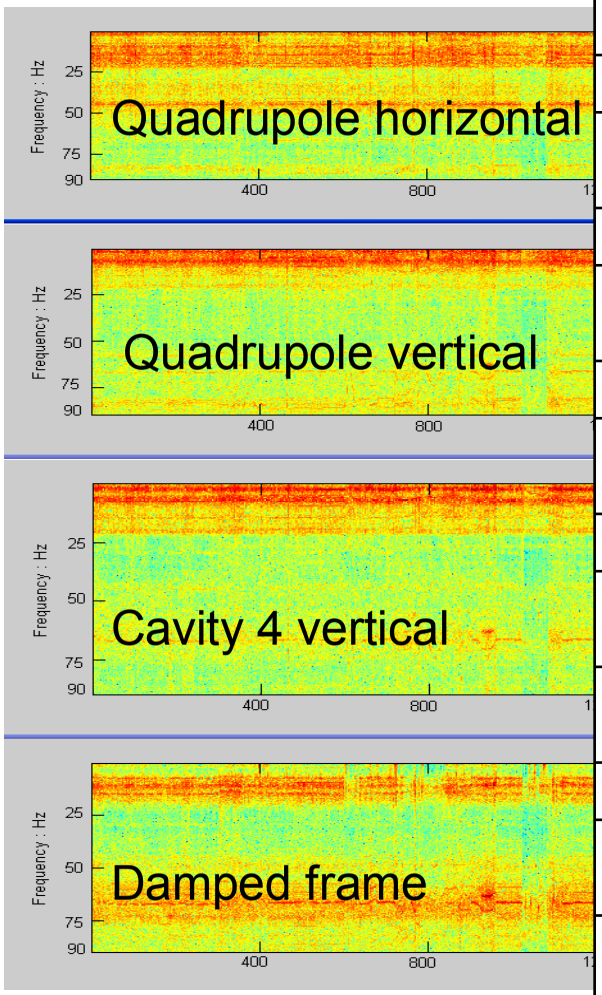

Preliminary Spectral Comparison of CM1 to DESY-Saclay Transport (thanks to M. McGee, Fermilab)

Geo1 (M8) quad x	CM1 (FNAL) quad x	ANSYS coldmass	
f (Hz)	f (Hz)	f (Hz)	Comment(s)
2	2		Existing from truck, gear down thru teeth from engine
	2.6		Existing from truck
	3 – 3.8		Possible natural frequency of CM1 isolation system
	5 – 6		Existing from truck
7	6.8		Existing from truck, possibly from transmission (7.7 Hz)
9	9.7		
	11.6	10.8	Existing freq from truck causes coldmass movement
14		13.7	Existing freq from truck causes coldmass movement
15 - 18			
20		19.6	Coldmass movement, running at 1200 rpm
22		21.5	Coldmass movement, truck running at ~1400 rpm
45			

Coupler shorts and vacuum gauges

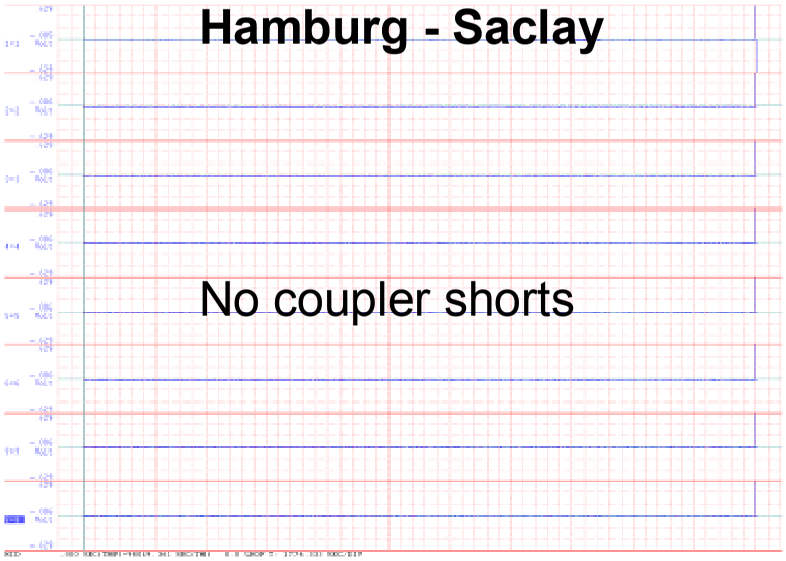

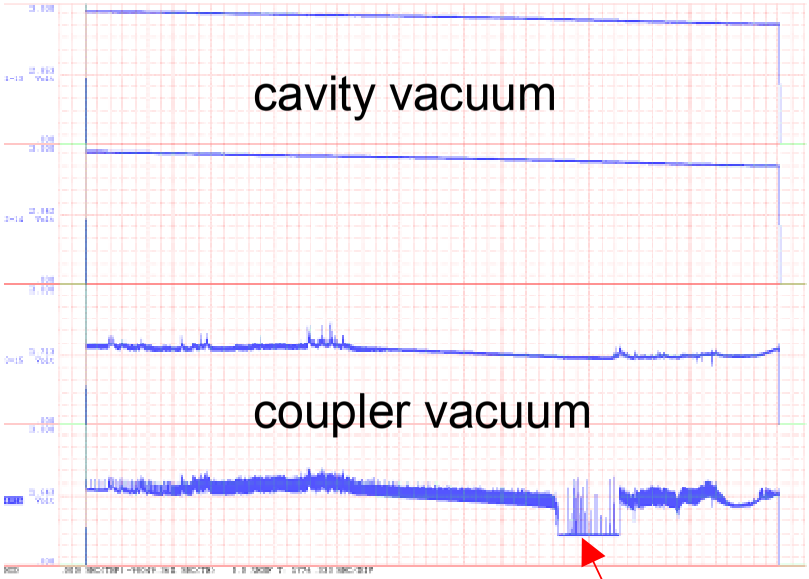

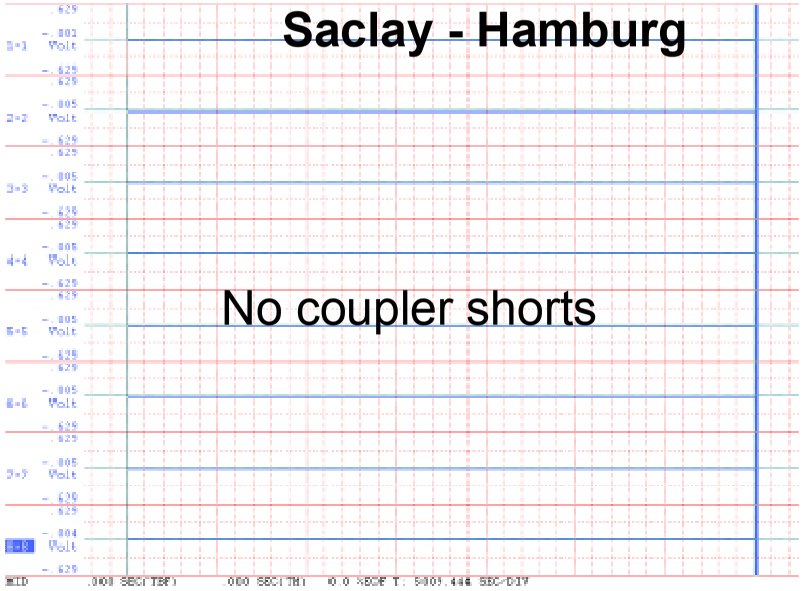

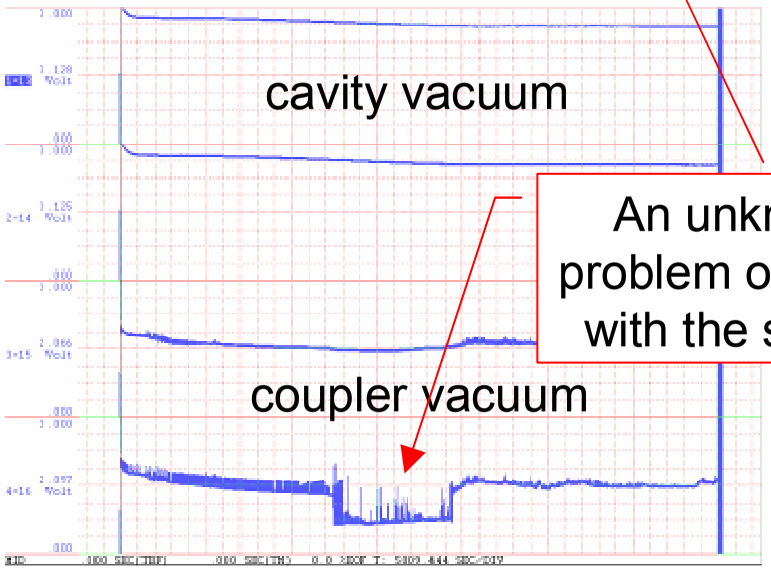

An unknown problem occurred with the sensor

M8 back at Desy

12 Nov. 2008 - Start CMTB installation

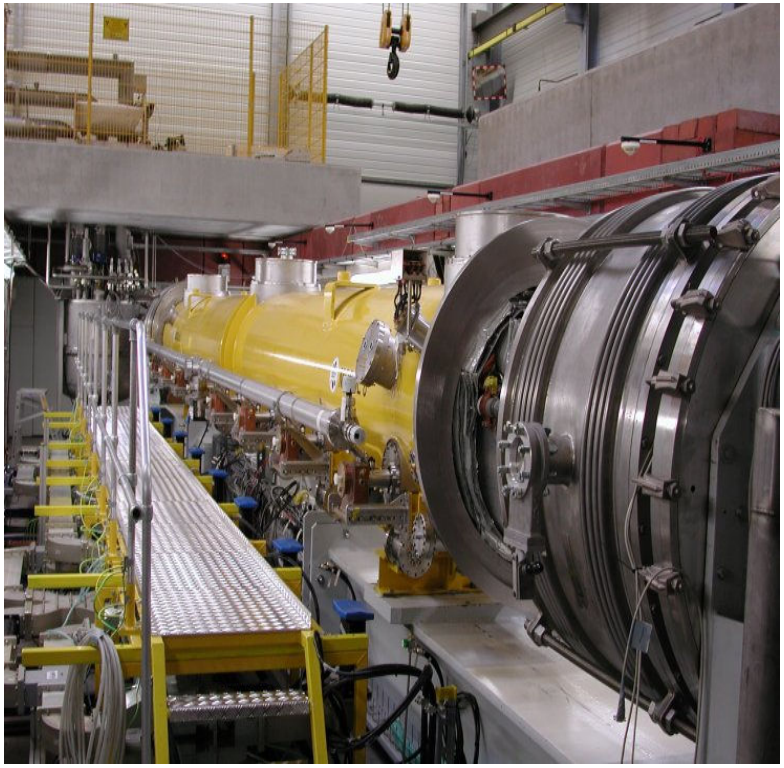

07 Nov. 2008 - Uploading Desy-Hall 1

05 Dec. 2008 - Start cool down
09 Dec. 2008 - RF-performance

M8 results on CMTB after the transport

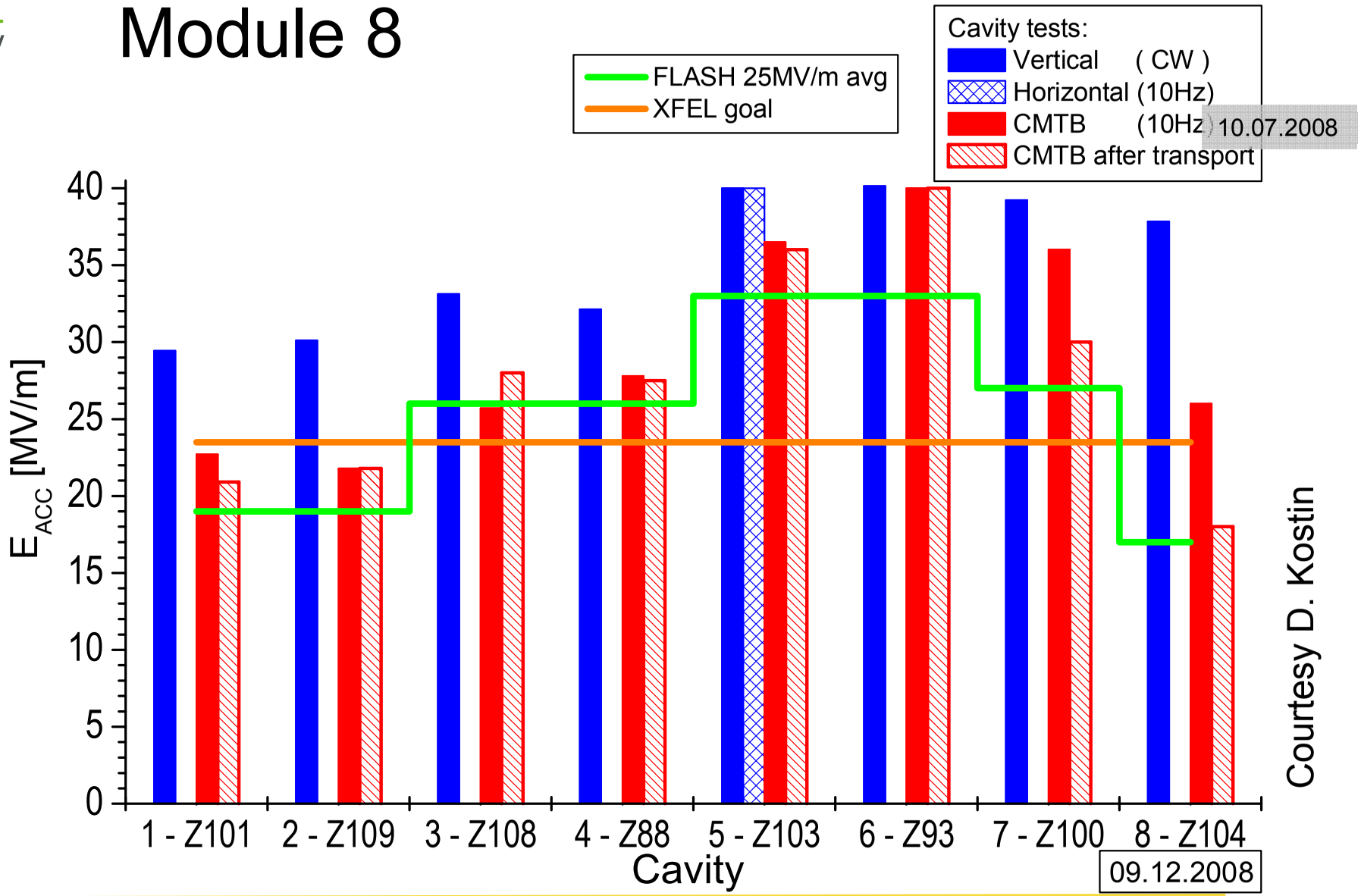

Courtesy D. Kostin

M8 Transportation Test

From module 8 to module 8*:

- String dis-assembly except of Cavity 5 – 7
- New cavities (1–4 + 8) with high gradients of 29 – 41 MV/m

Lessons and Questions from the M8 Test:

- No large shock/vibrations recorded during transport.
- Saclay hall is well suited for hauling module on truck.
- What is the reason of the degradation of C7 and C8?
- Is the concept of remote assembly valid or not?
- Which tests are needed to fully validate it ?

ILC Extrapolation

~2000 modules over 2 years and 3 assembly sites

⇒ a rate of one module / day at each site is required.

Since every workstation needs a backup:
assume 2 production lines in // during smooth operation
⇒ 2-day turnover at each Production Line.

Clean Room String Assembly :160 pH working time

- XFEL = 1sh * 8H * 2t * 2p * 5d → 1 string / week
- ILC = 2sh * 10H * 2t * 2p * 2d → 1 string / 2 day

(the cavity and string pumping time must be considered)

Module Assembly : 640 pH working time

- ILC = 8 WS * 2sh * 8H * 2.5p * 2d → 1 string / 2 day