CERN progress in high gradient investigations

Alexej Grudiev, CERN

For CLIC RF structure development team

Accelerator Physics and Technology Seminar

Fermilab

June 21, 2010

Motivation

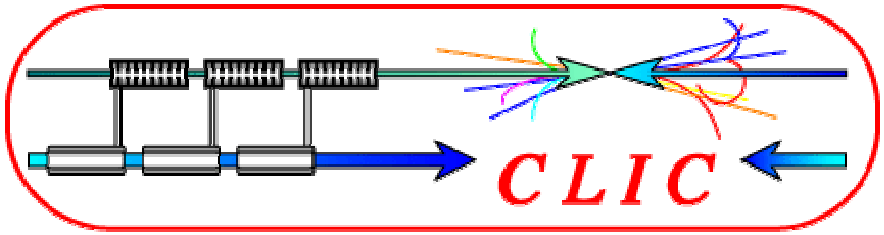

CLIC (Compact Linear Collider) study is a e+/e- linear collider project aiming at 3 TeV center-of-mass collision energy. It is based on two-beam acceleration scheme. This allows to overcome a limitation on the peak rf power per meter available for the acceleration which is present in the klystron based linacs. Therefore, the main limitation on the CLIC main linac accelerating gradient comes from the vacuum rf breakdown phenomena which take place in accelerating structure.

What is High Gradient R&D ?

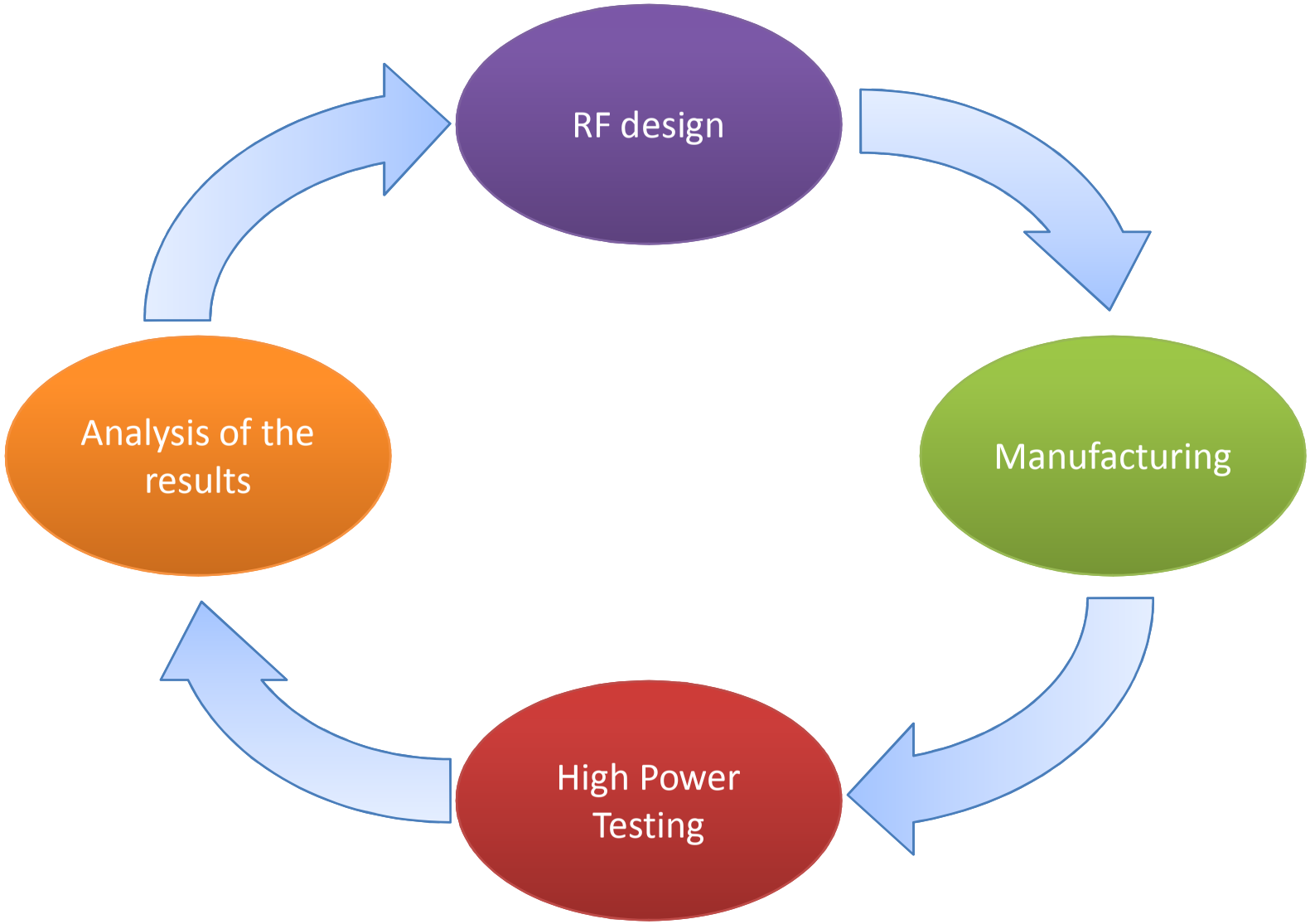

Very fruitful collaboration between CERN-KEK-SLAC

RF design

RF design constraints for CLIC

Beam dynamics (BD) constraints based on the simulation of the main linac, BDS and beam-beam collision at the IP:

- N – bunch population depends on $\langle a \rangle/\lambda$, $\Delta a/\langle a \rangle$ because of short-range wakes
- N_s – bunch separation depends on the long-range dipole wake suppression

RF breakdown and pulsed surface heating (PSH) constraints:

- $\Delta T^{max}(H_{surf}^{max}, t_p) < 56$ K (accelerating structure life time issues)
- $E_{surf}^{max} < 250$ MV/m
- $P_{in}/C_{in} \cdot (t_p)^{1/3} < 18$ MW/mm $\cdot$ ns$^{1/3}$
- $(S_c = \mathrm{Re}\{S\} + \mathrm{Im}\{S\}/6) \cdot (t_p)^{1/3} < 4$ MW/mm$^2 \cdot (200$ ns$)^{1/3}$

Analysis of the test results

RF constraints: data analysis 1

	RF design name	f [GHz]	dphi [deg]	vg1 [%]
1	DDS1	11.424	120	11.7
2	T53VG5R	11.424	120	5
3	T53VG3MC	11.424	120	3.3
4	H90VG3	11.424	150	3
5	H60VG3	11.424	150	2.8
6	H60VG3R18	11.424	150	3.3
7	H60VG3R17	11.424	150	3.6
8	H75VG4R18	11.424	150	4
9	H60VG4R17	11.424	150	4.5
10	HDX11-Cu	11.424	60	5.1
11	CLIC-X-band	11.424	120	1.1
12	T18VG2.6-In	11.424	120	2.6
13	T18VG2.6-Out	11.424	120	1.03
14	T18VG2.6-Rev	11.424	120	1.03
15	T26VG3-In	11.424	120	3.3
16	T26VG3-Out	11.424	120	1.65
17	TD18_KEK_In	11.424	120	2.4
18	TD18_KEK_Out	11.424	120	0.9
19	SW20A3p75	11.424	180	0
20	SW1A5p65T4p6	11.424	180	0
21	SW1A3p75T2p6	11.424	180	0
22	SW1A3p75T1p66	11.424	180	0
23	2pi/3	29.985	120	4.7
24	pi/2	29.985	90	7.4
25	HDS60-In	29.985	60	8
26	HDS60-Out	29.985	60	5.1
27	HDS60-Rev	29.985	60	5.1
28	HDS4Th	29.985	150	2.6
29	HDS4Th	29.985	150	2.6
30	PETS9mm	29.985	120	39.8

High power test results has been scaled to tp=200 ns BDR=1e-6 bpp/m using power scaling lower

$$\frac{E_a^{30} \cdot t_p^5}{BDR} = const$$

based on the fitting the data

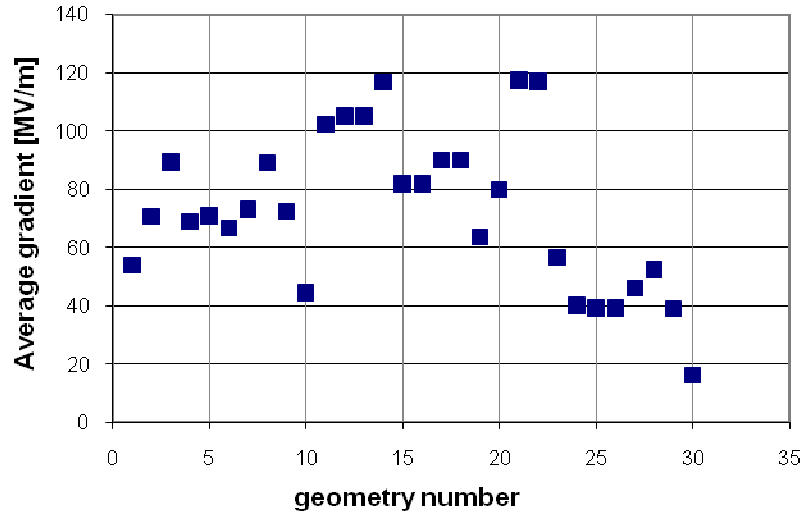

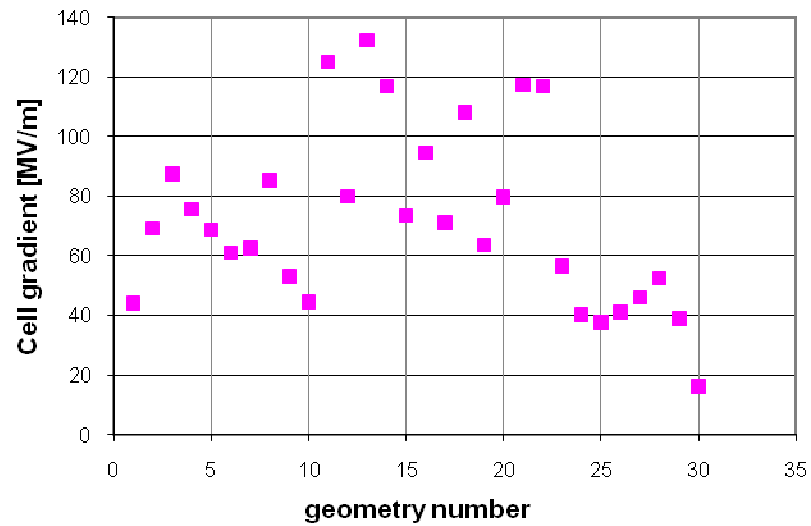

RF constraints: data analysis 2

Data has been scaled to tp=200 ns BDR=1e-6 bpp/m

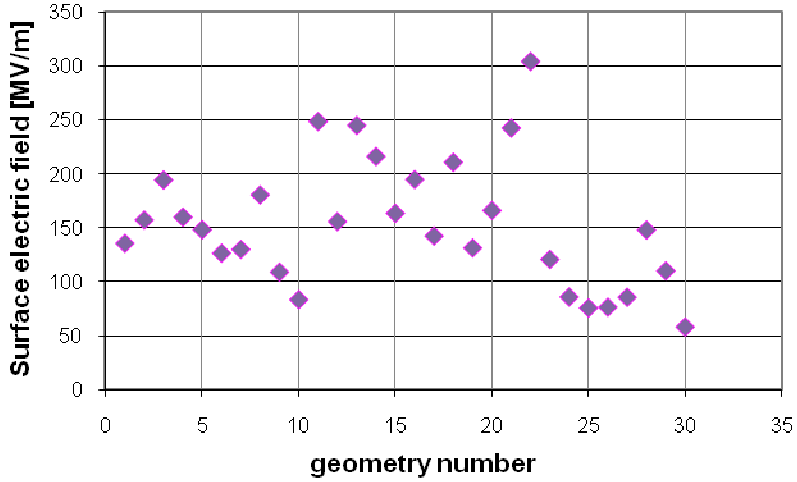

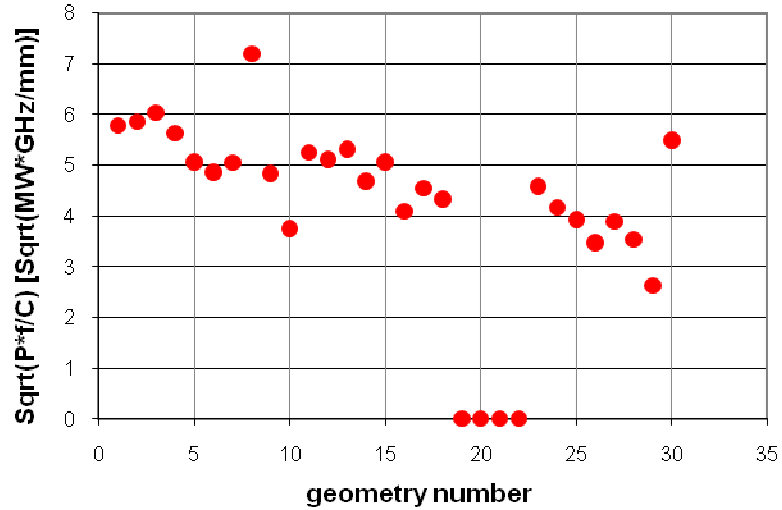

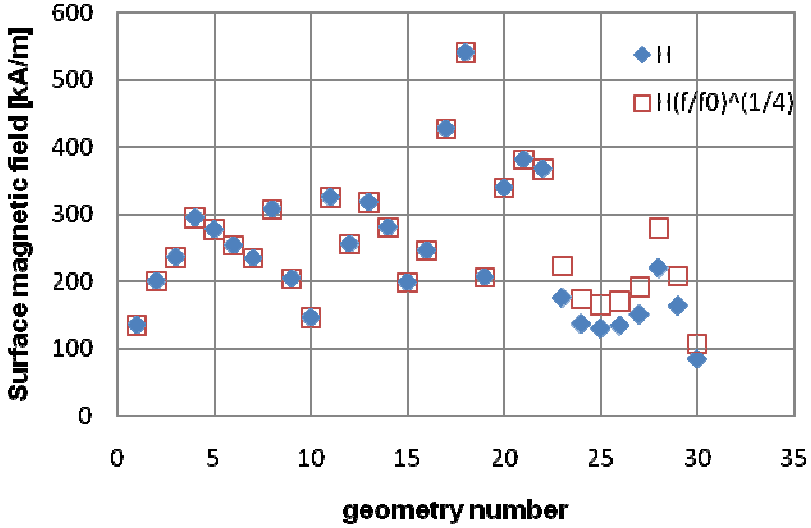

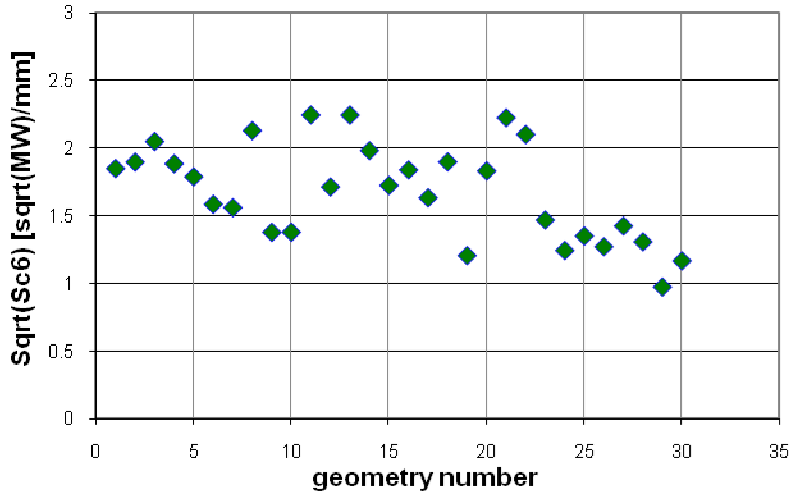

$$S_c = \mathrm{Re}\{\mathbf{S}\} + \mathrm{Im}\{\mathbf{S}\}/6$$

RF design

1st generation of CLIC X-band test structure prototypes T18/TD18
Parameters at tp=100 ns, <Ea>=100 MV/m

T18_vg2.6_disk:

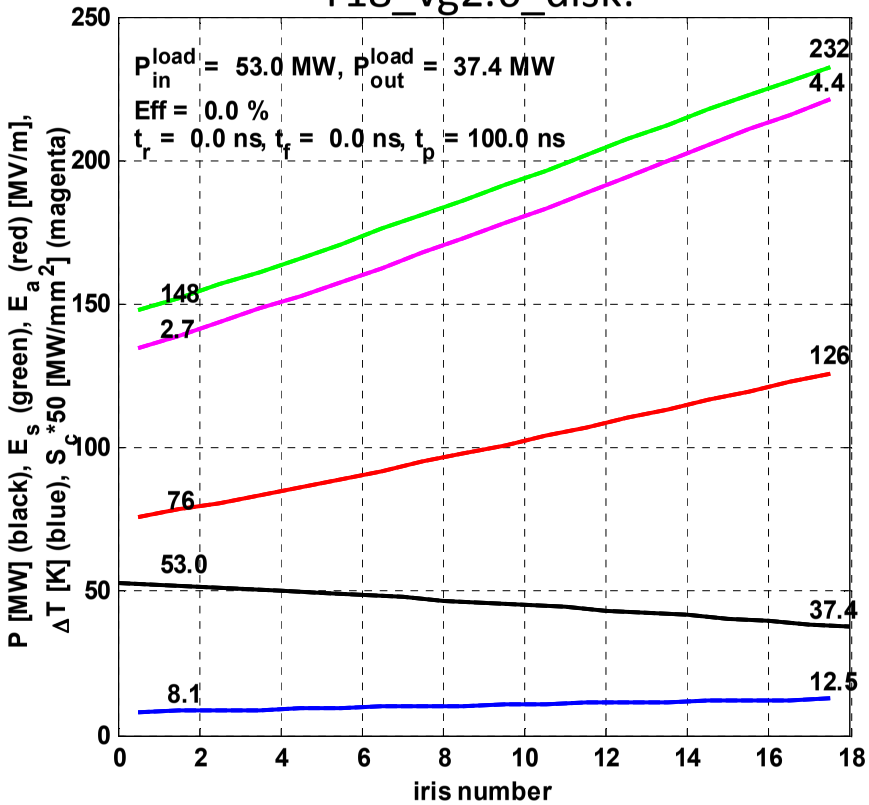

TD18_vg2.4_disk:

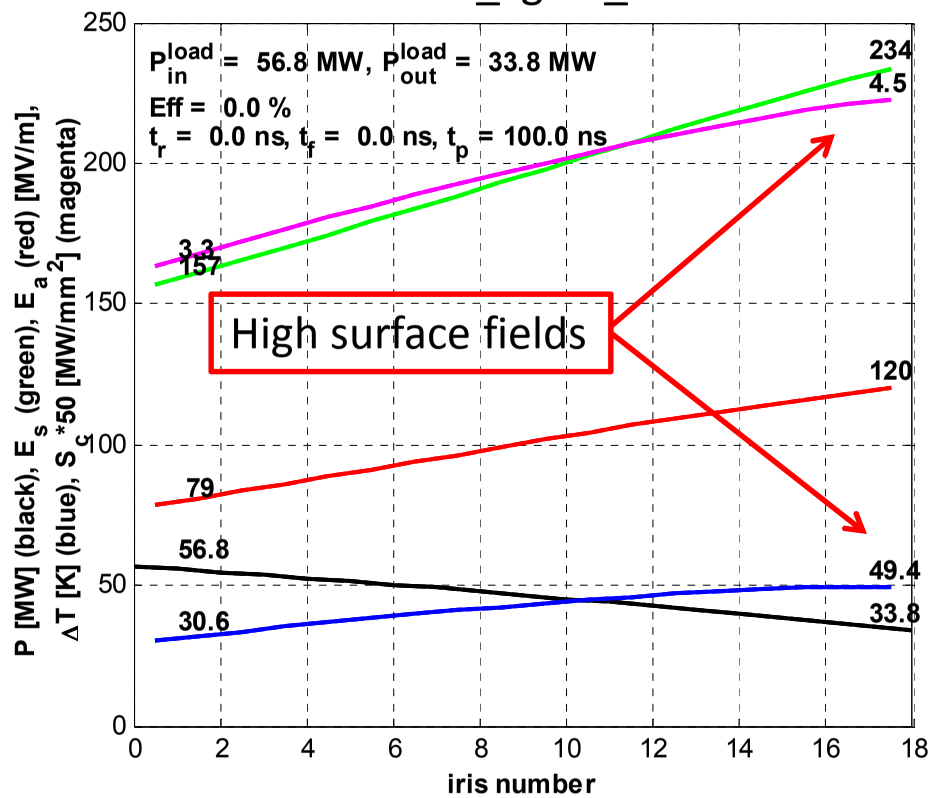

Very strong tapering inspired by the idea of having constant P/C along the structure

In TD18, all quantities are close to T18 at the same average gradient, except for the pulsed surface heating temperature rise which is factor 5 higher in the last cell.

2nd generation of CLIC X-band test structure prototypes T24/TD24
Parameters at tp=100 ns, <Ea>=100 MV/m

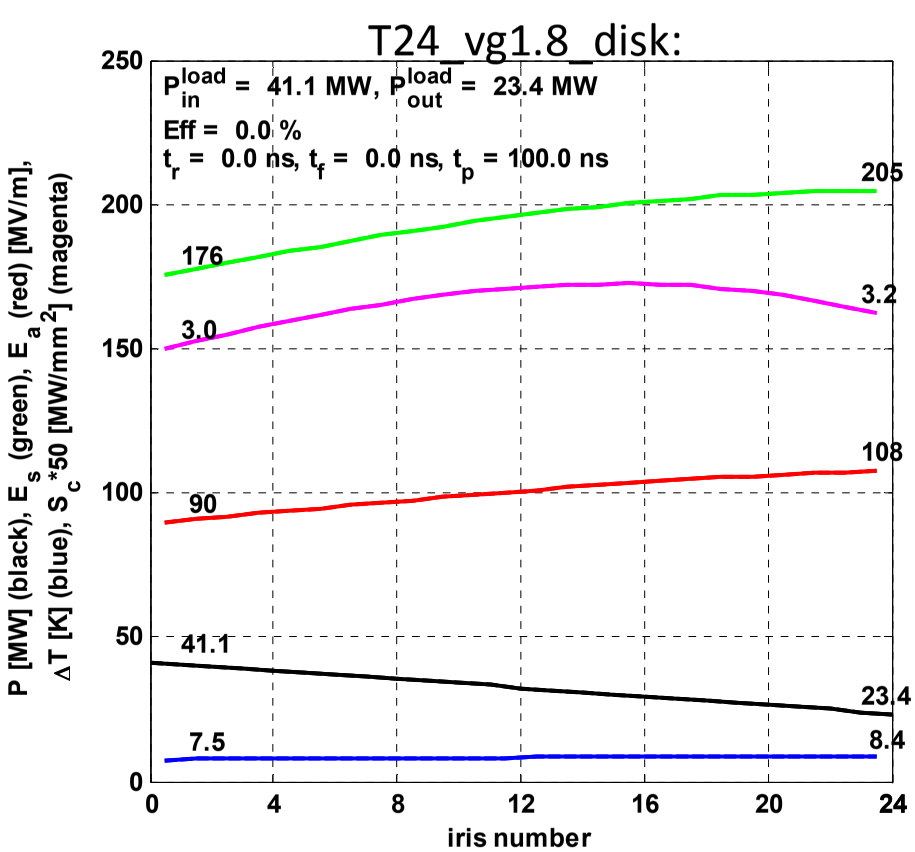

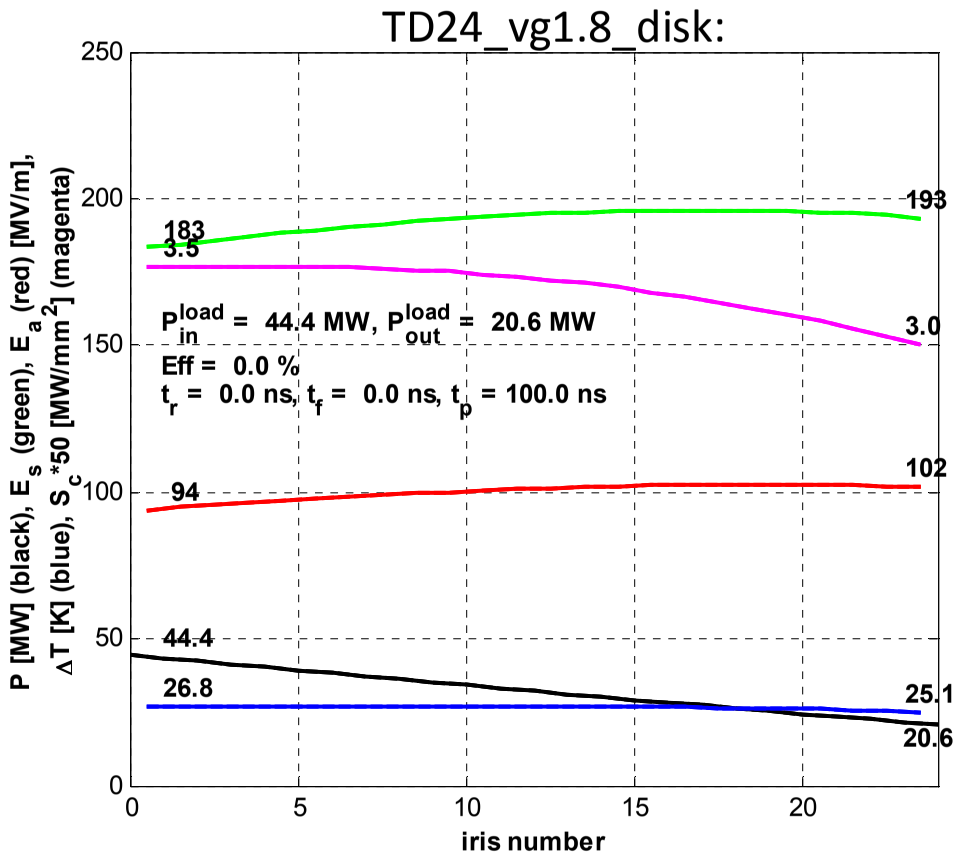

Weaker tapering (quasi const gradient) together with smaller aperture (11% instead of 12.8%) reduce surface fields significantly compared to T18/TD18.

In TD24, all quantities are lower than in TD18 at the same average gradient. In particular pulsed surface heating temperature rise reduced by factor 2.

From RF design to a piece of Copper

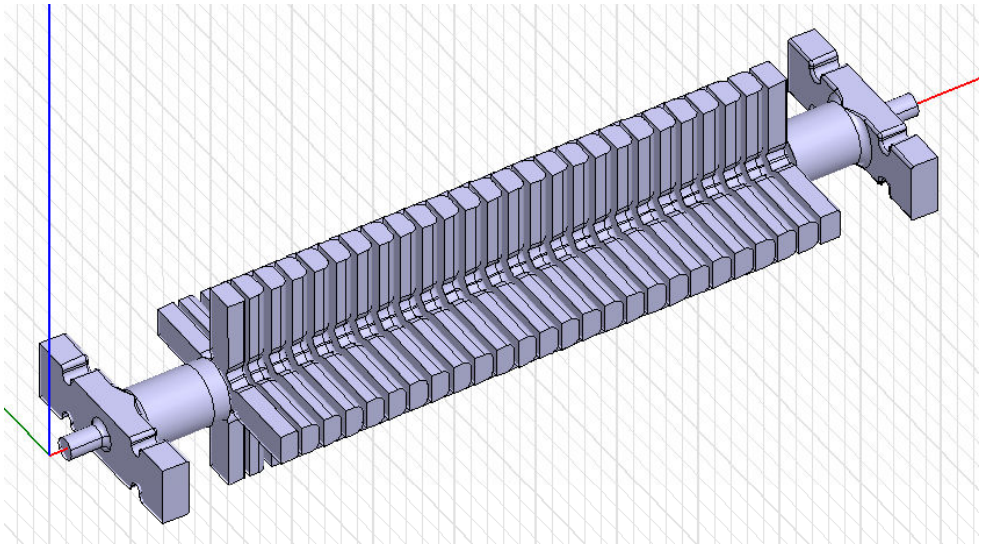

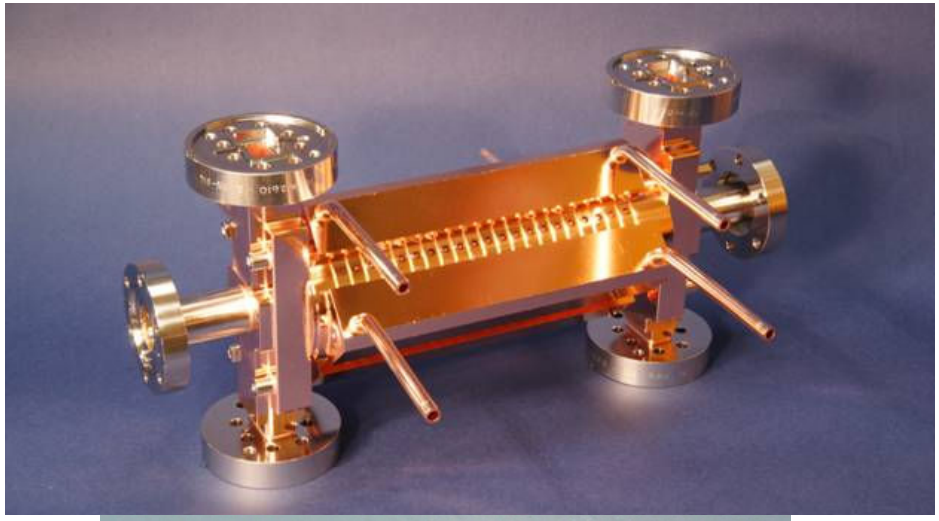

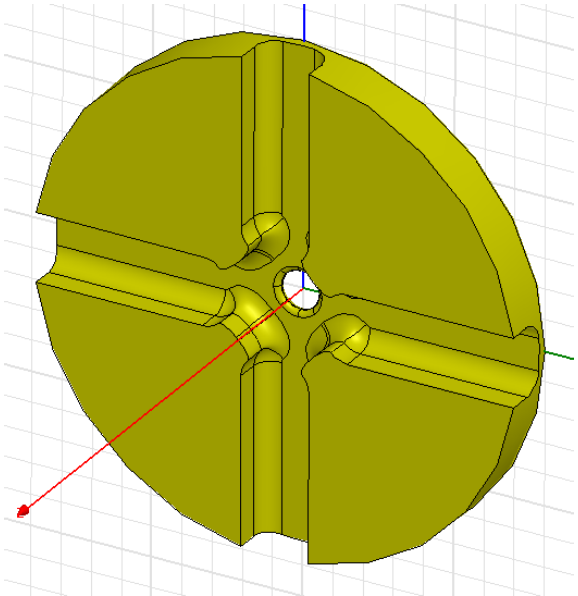

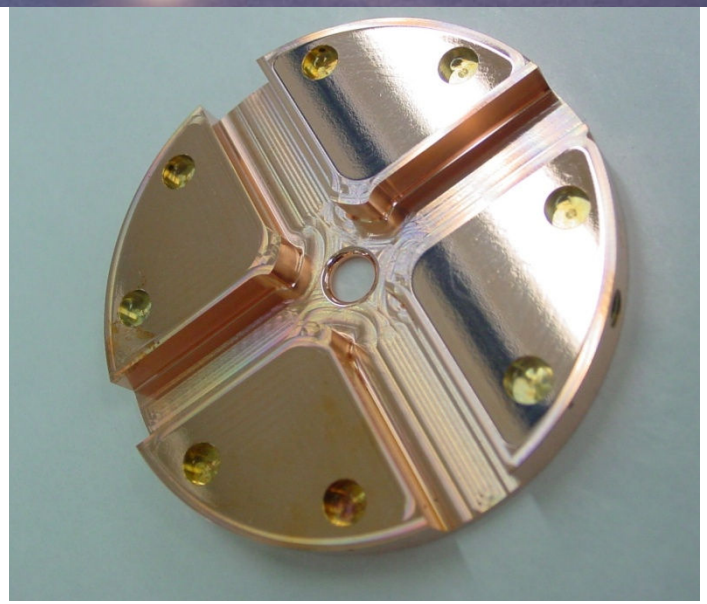

Manufacturing

PARAMETER-BASED MECH. DESIGN

Alexandre.Samochkine @ cern.ch

RF INPUT

No	b' (mm)	a' (mm)	t' (mm)	rdw' (mm)	C' (mm)	c_iris' (mm)	eb' (mm)	adw' (mm)	idw' (mm)	g' (mm)	Item'	t_pr (mm)
0	11.5	5.917	2.897			0.290	1.304	11.8	9.2		Match.Iris A	
1	9.575	4.060	2.794	3.364	0.592	0.279	1.517	11.8	9.2	5.976	Match.Cell A	
2	9.178	4.019	2.750	4.118	0.33	0.275	1.492	11.8	9.2	5.976	Cell 1	2.794
3	9.125	3.936	2.663	4.121	0.33	0.266	1.442	11.8	9.2	6.041	Cell 2	2.750
4	9.073	3.854	2.576	4.123	0.33	0.258	1.392	11.8	9.2	6.128	Cell 3	2.663
5	9.023	3.772	2.489	4.125	0.33	0.249	1.342	11.8	9.2	6.215	Cell 4	2.576
6	8.974	3.689	2.402	4.127	0.33	0.240	1.292	11.8	9.2	6.302	Cell 5	2.489
7	8.927	3.607	2.315	4.129	0.33	0.232	1.242	11.8	9.2	6.389	Cell 6	2.402
8	8.882	3.525	2.228	4.131	0.33	0.223	1.193	11.8	9.2	6.476	Cell 7	2.315
9	8.838	3.442	2.141	4.133	0.33	0.214	1.143	11.8	9.2	6.563	Cell 8	2.228
10	8.796	3.360	2.054	4.134	0.33	0.205	1.094	11.8	9.2	6.650	Cell 9	2.141
11	8.755	3.278	1.967	4.135	0.33	0.197	1.045	11.8	9.2	6.738	Cell 10	2.054
12	8.716	3.195	1.880	4.137	0.33	0.188	0.995	11.8	9.2	6.825	Cell 11	1.967
13	8.678	3.113	1.793	4.138	0.33	0.179	0.946	11.8	9.2	6.912	Cell 12	1.880
14	8.642	3.031	1.706	4.138	0.33	0.171	0.897	11.8	9.2	6.999	Cell 13	1.793
15	8.608	2.948	1.619	4.139	0.33	0.162	0.848	11.8	9.2	7.086	Cell 14	1.706
16	8.576	2.866	1.532	4.139	0.33	0.153	0.800	11.8	9.2	7.173	Cell 15	1.619
17	8.544	2.784	1.445	4.140	0.33	0.144	0.751	11.8	9.2	7.260	Cell 16	1.532
18	8.515	2.701	1.358	4.140	0.33	0.136	0.703	11.8	9.2	7.347	Cell 17	1.445
19	8.487	2.660	1.314	4.139	0.33	0.131	0.679	11.8	9.2	7.412	Cell 18	1.358
20	8.925	5.224	2.157	4.066	0.33	0.257	0.95	11.8	9.2	7.013	Match.Cell B	1.314

t/10

adw & idw = Const values

g=P-t/2-t_pr/2

3D PART

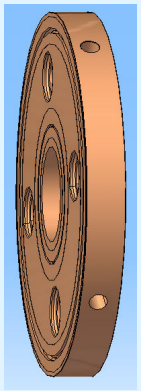

GENERATED 3D PARTS

Name

- 11WNSDVG1_0_001.CATPart
- 11WNSDVG1_1_002.CATPart
- 11WNSDVG1_2_003.CATPart
- 11WNSDVG1_3_004.CATPart
- 11WNSDVG1_4_005.CATPart
- 11WNSDVG1_5_006.CATPart
- 11WNSDVG1_6_007.CATPart
- 11WNSDVG1_7_008.CATPart
- 11WNSDVG1_8_009.CATPart
- 11WNSDVG1_9_010.CATPart
- 11WNSDVG1_10_011.CATPart
- 11WNSDVG1_11_012.CATPart
- 11WNSDVG1_12_013.CATPart
- 11WNSDVG1_13_014.CATPart
- 11WNSDVG1_14_015.CATPart
- 11WNSDVG1_15_016.CATPart
- 11WNSDVG1_16_017.CATPart
- 11WNSDVG1_17_018.CATPart
- 11WNSDVG1_18_019.CATPart
- 11WNSDVG1_19_020.CATPart
- 11WNSDVG1_20_021.CATPart
- 11WNSDVG1_A_023.CATPart
- 11WNSDVG1_B_022.CATPart

ASSEMBLY

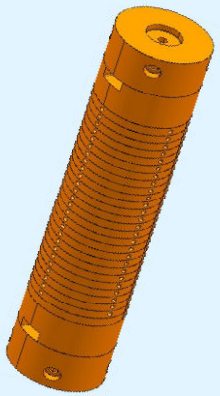

RF CHECK

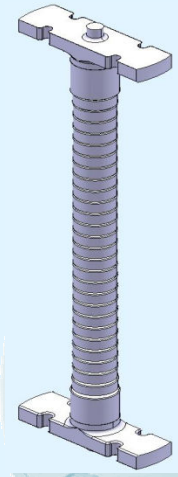

FEEDBACK FROM INDUSTRY

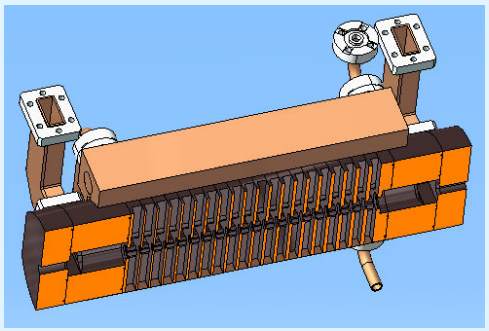

ASSEMBLY DESIGN

EDMS, CDD, MTF

S T

SmarTeam

ARCHIVING

TECHNICAL DRAWINGS

Alexandre.Samochkine @ cern.ch

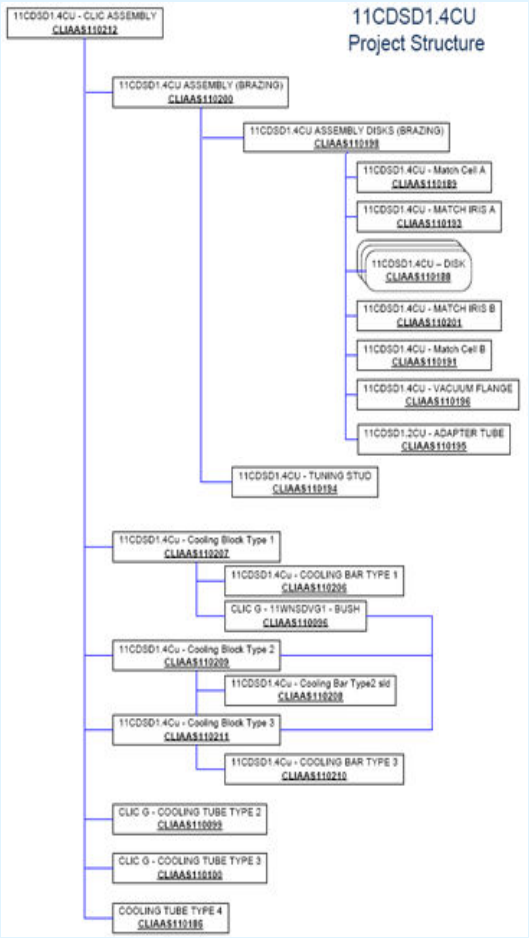

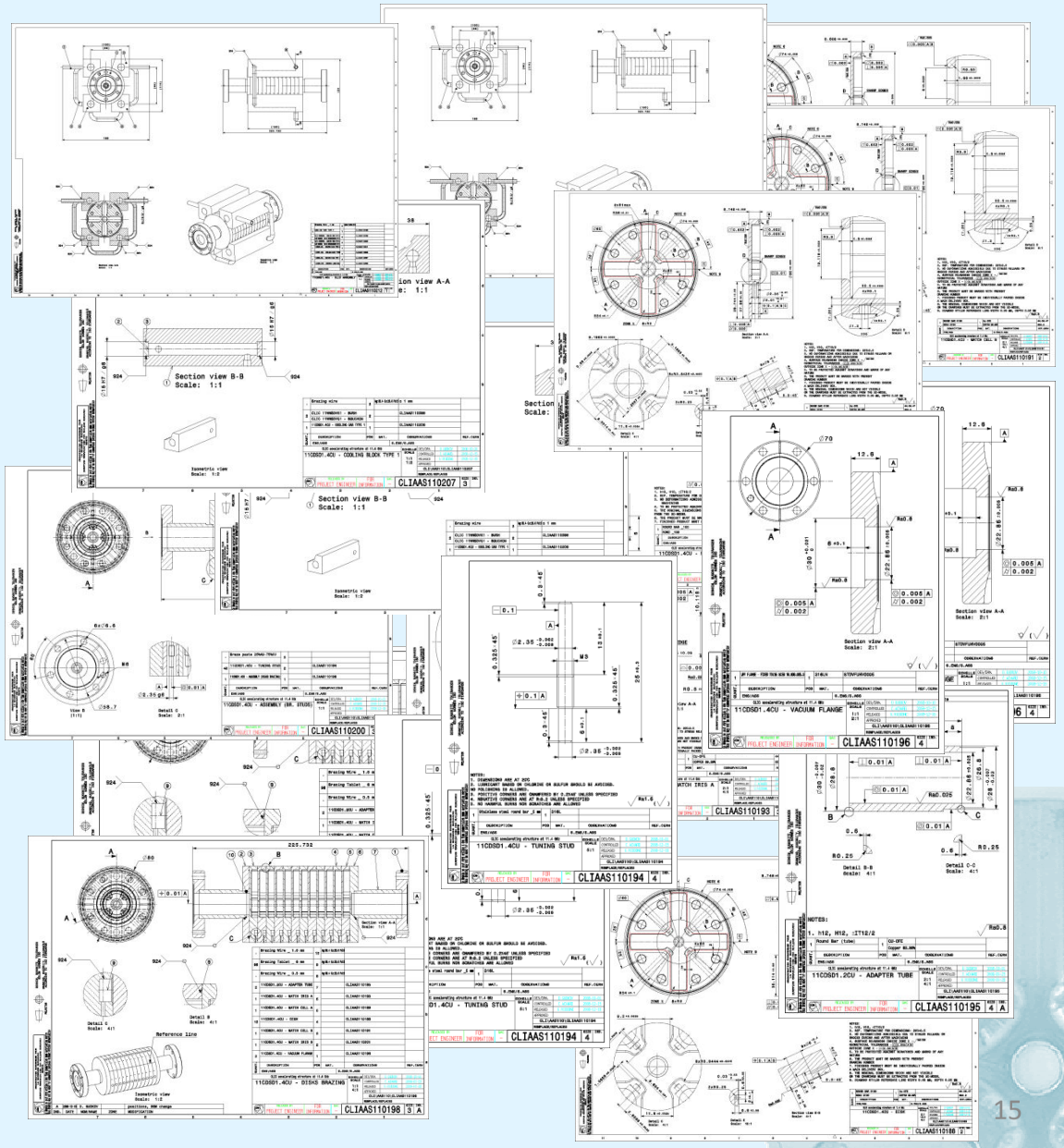

Project Structure

TECHNICAL DOCUMENTATION MANAGEMENT

Alexandre.Samochkine @ cern.ch

CERN Engineering & Equipment Data Management System

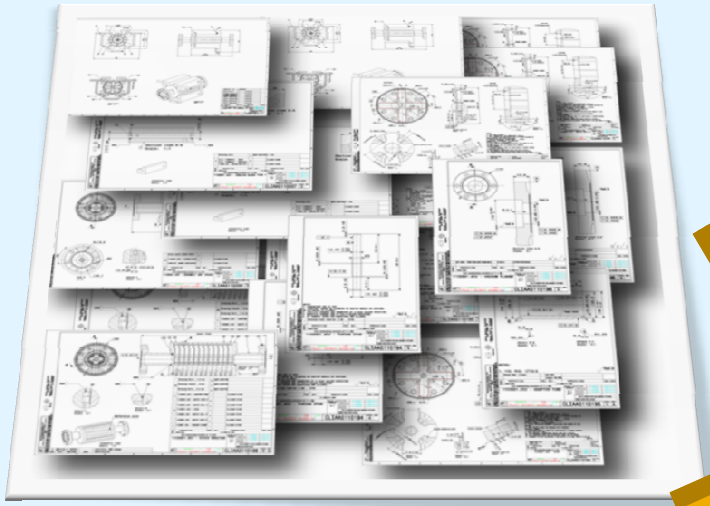

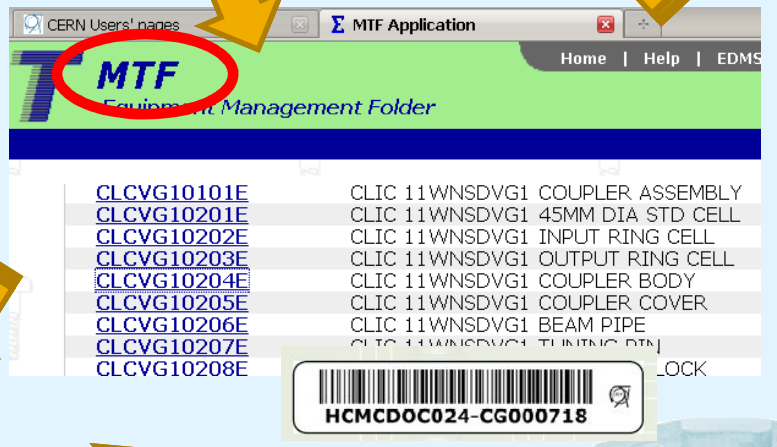

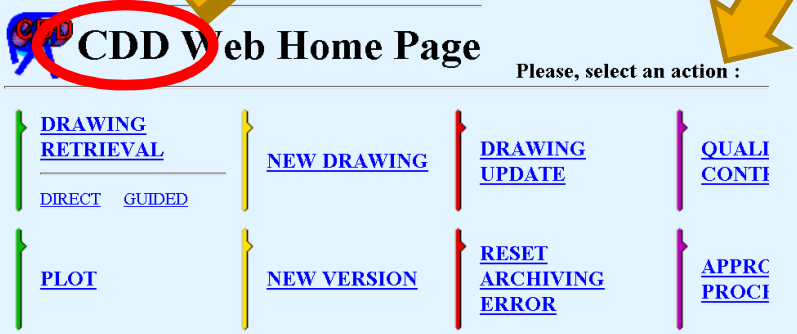

Follow-up of each manufactured component

Drawings are stored in SmarTeam db, which is linked to CERN Drawing Directory (CDD) & Equipment Management System (MTF)

DESIGNED AS IN DISKS

Alexandre.Samochkine @ cern.ch

Tank → ***Sealed*** *Vac. Brazing* → ***H_2 Diffusion Bonding***

11.424 GHz, 18 cells, non-damped, tank, disks Ø80mm, push only tuning

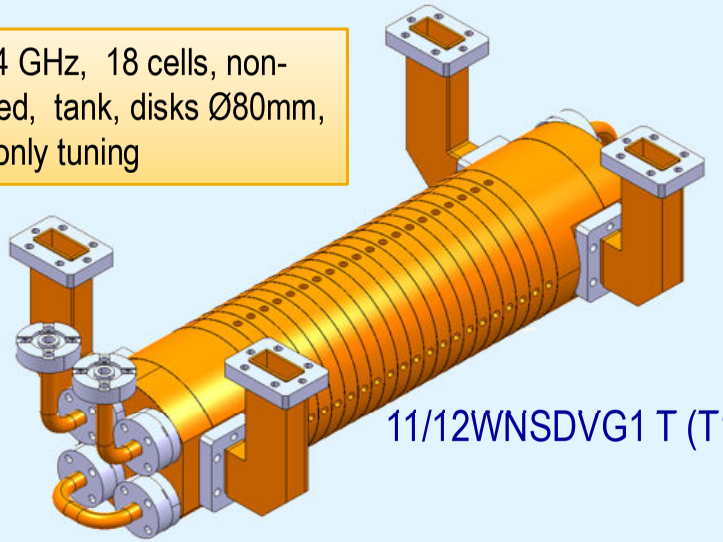

11/12WNSDVG1 T (T18)

11.424, 18 cells, damped, tank, disks Ø80mm, push only tuning

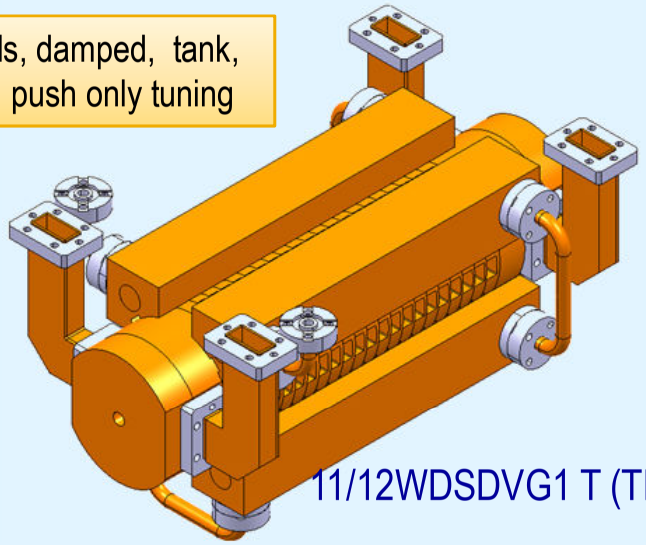

11/12WDSDVG1 T (TD18)

11.424 & 11.994 GHz, 24 cells, damped, tank, disks Ø80mm, push only tuning

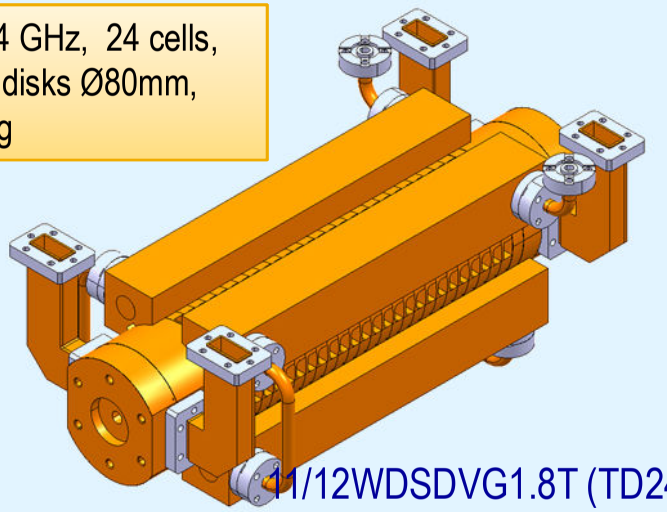

11/12WDSDVG1.8T (TD24)

11.424 & 11.994 GHz, 24 cells, non-damped, sealed, disks Ø80mm, push only tuning

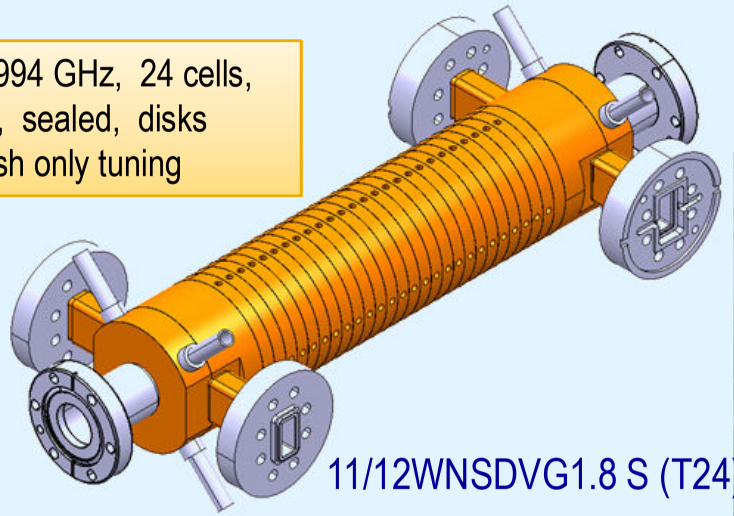

11/12WNSDVG1.8 S (T24)

DESIGNED AS IN DISKS

Alexandre.Samochkine @ cern.ch

11.424 & 11.994 GHz, 24 cells, non-damped, tank, disks Ø80mm, push only tuning

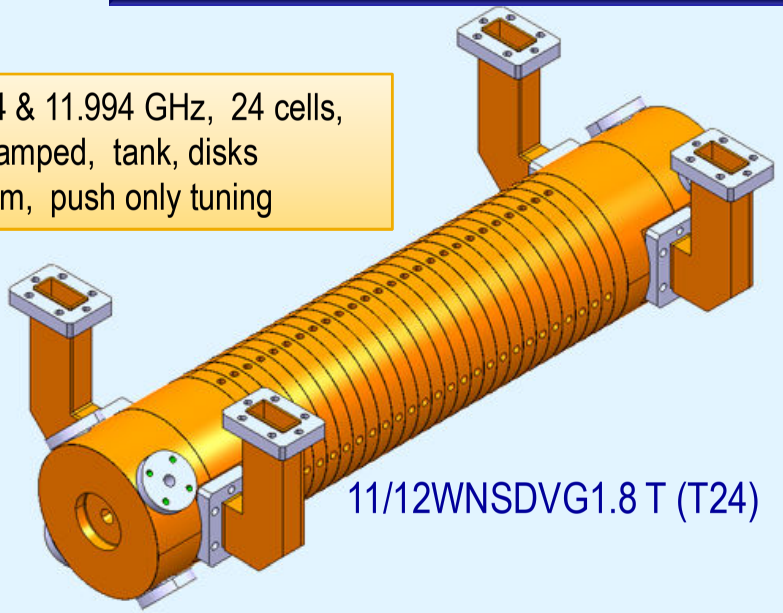

11/12WNSDVG1.8 T (T24)

11/12WDSDVG1.8S (TD24)

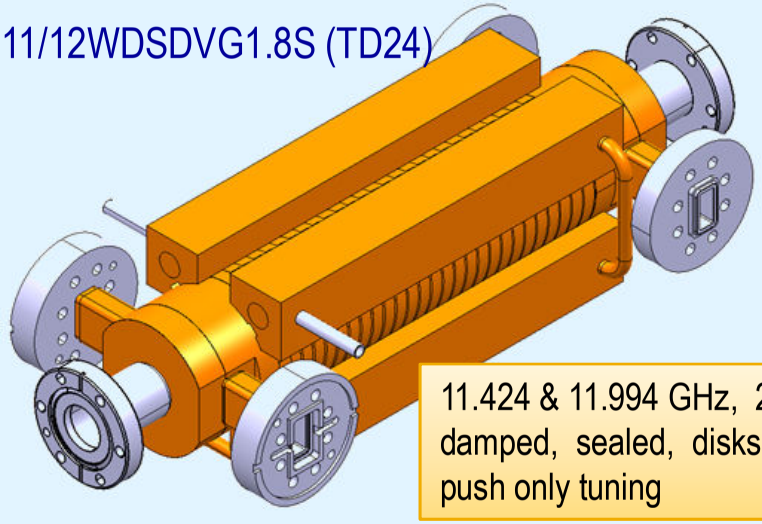

11.424 & 11.994 GHz, 24 cells, damped, sealed, disks Ø80mm, push only tuning

CLIAPSI

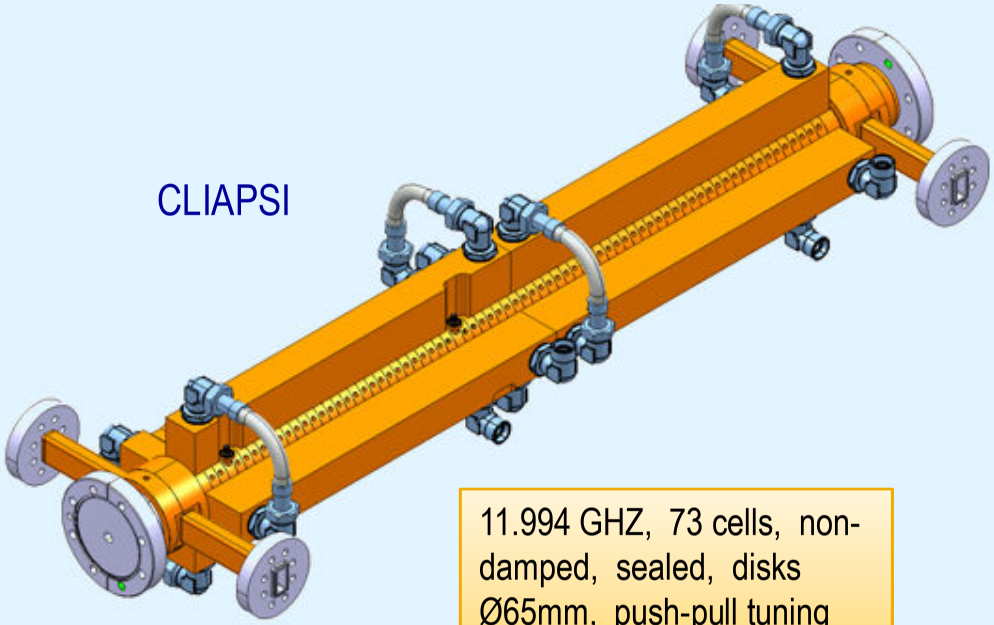

11.994 GHZ, 73 cells, non-damped, sealed, disks Ø65mm, push-pull tuning

11WNSDVG1.8 VB (T24)

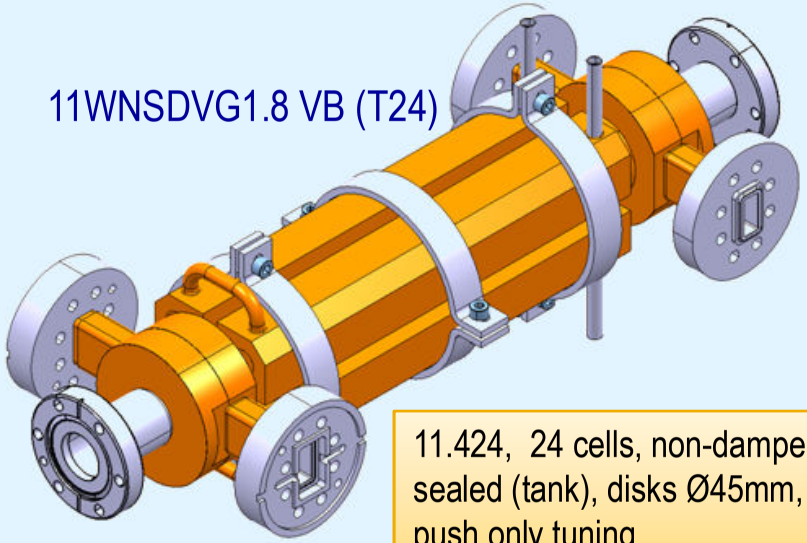

11.424, 24 cells, non-damped, sealed (tank), disks Ø45mm, push only tuning

DESIGNED AS IN DISKS

Alexandre.Samochkine @ cern.ch

11.424 & 11.994 GHz, 24 cells, damped, sealed, disks Ø74mm, push-pull tuning

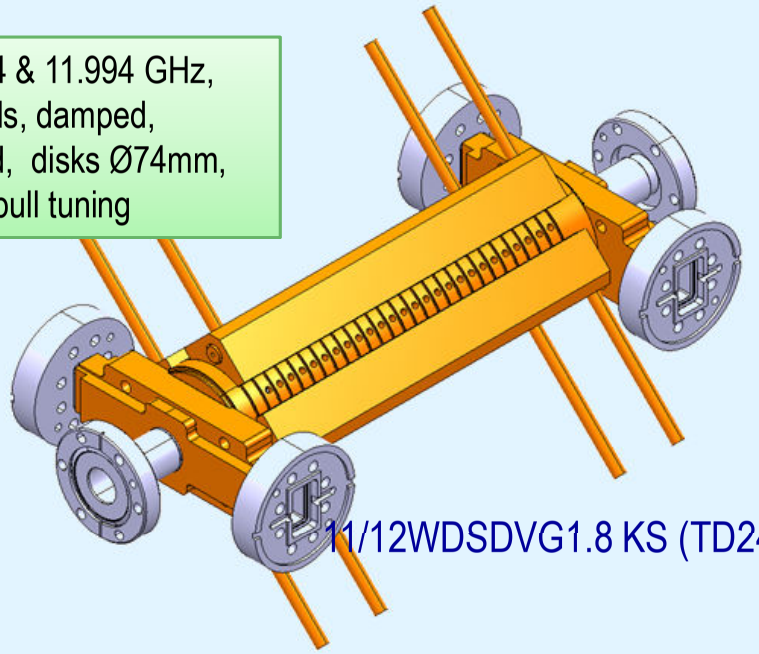

11/12WDSDVG1.8 KS (TD24)

11/12WNSDVG1.8 KS (T24)

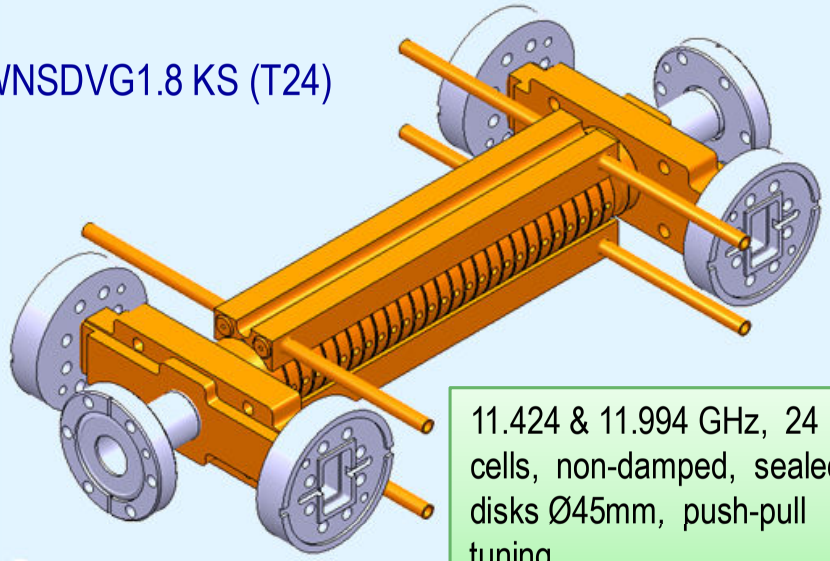

11.424 & 11.994 GHz, 24 cells, non-damped, sealed, disks Ø45mm, push-pull tuning

FUNDAMENTAL STRUCTURES

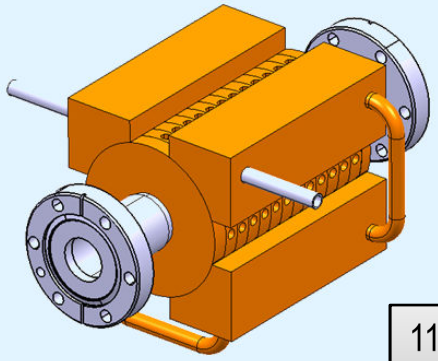

CD10

11.424, 10 cells, damped, sealed, disks Ø80mm, push-pull tuning

C10

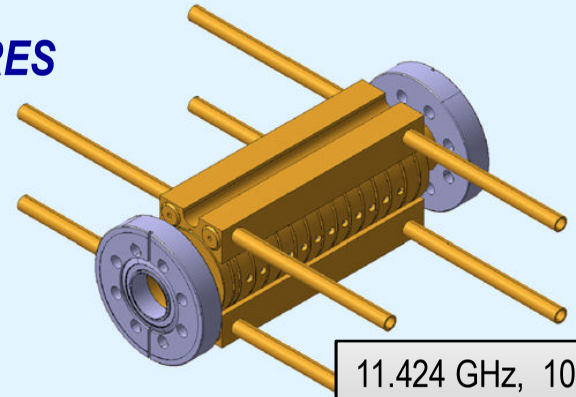

11.424 GHz, 10 cells, non-damped, sealed, disks Ø45mm, push-pull tuning

ALTERNATIVE AS DESIGN

Alexandre.Samochkine @ cern.ch

*DAMPED & NON DAMPED **QUADRANTS** (ALTERNATIVE)*

11.424 GHZ,
18 cells, damped,
tank, quadrants,
push-only tuning

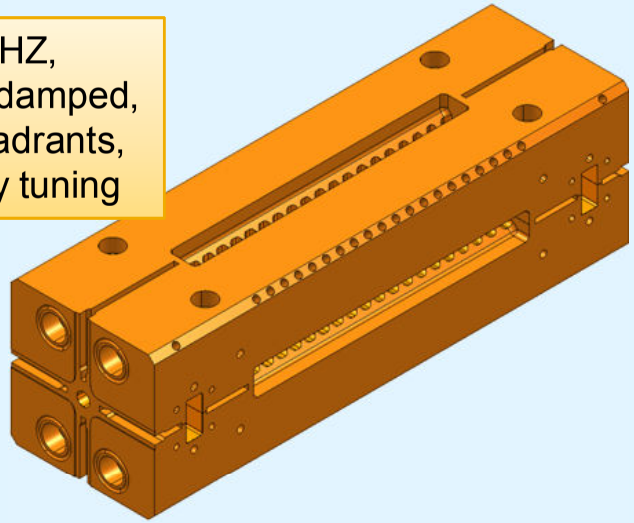

11WDSQVG1

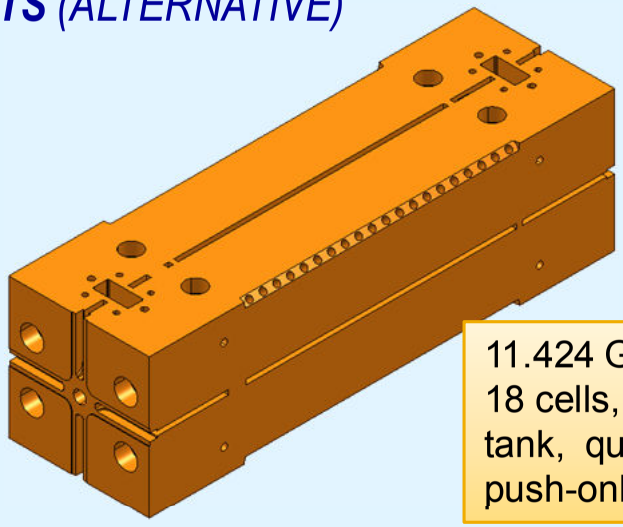

11WNSQVG1

11.424 GHZ,
18 cells, non-damped,
tank, quadrants,
push-only tuning

*FUTURE TESTS (ALTERNATIVE) – **HALVES** & **DOUBLE LENGTH QUADRANTS***

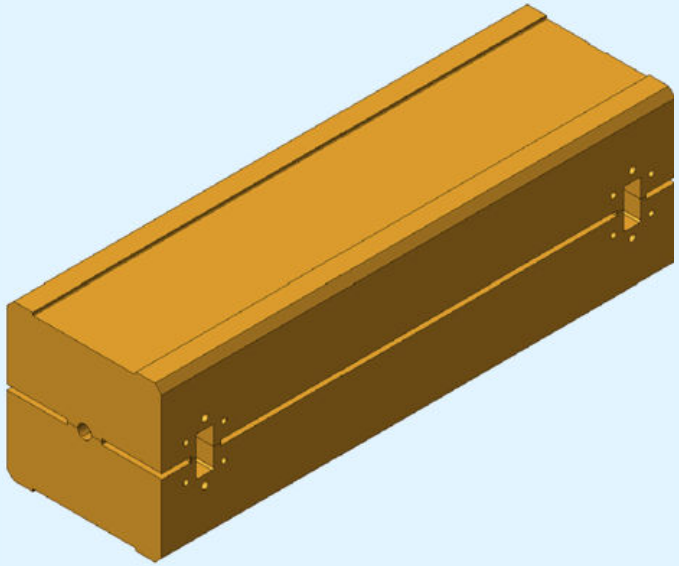

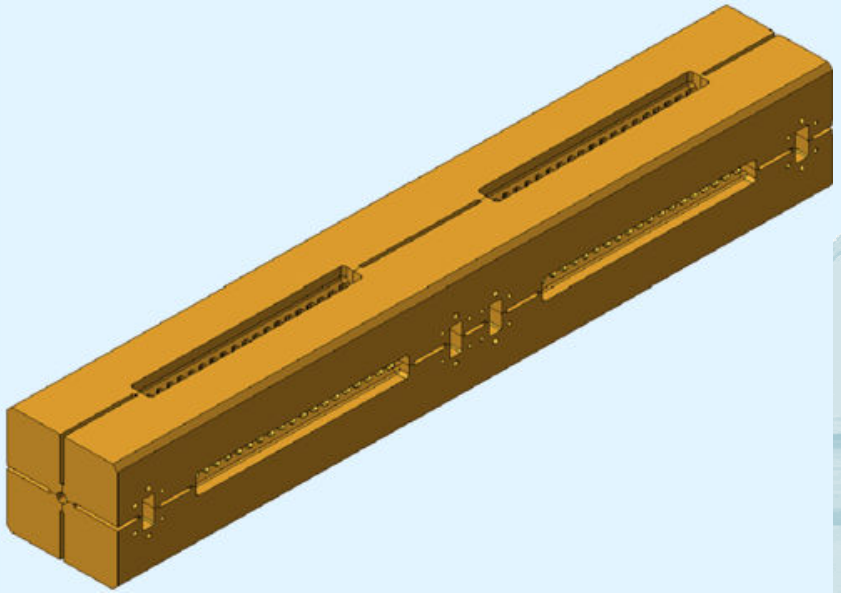

DESIGN OF WAKEFIELD MONITORS

Alexandre.Samochkine @ cern.ch

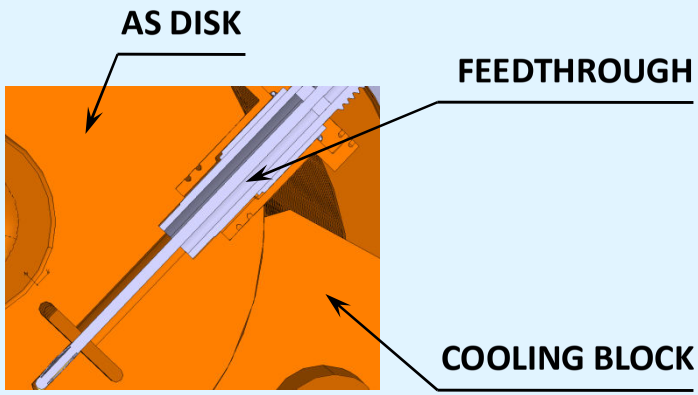

CEA-CERN COLLABORATION

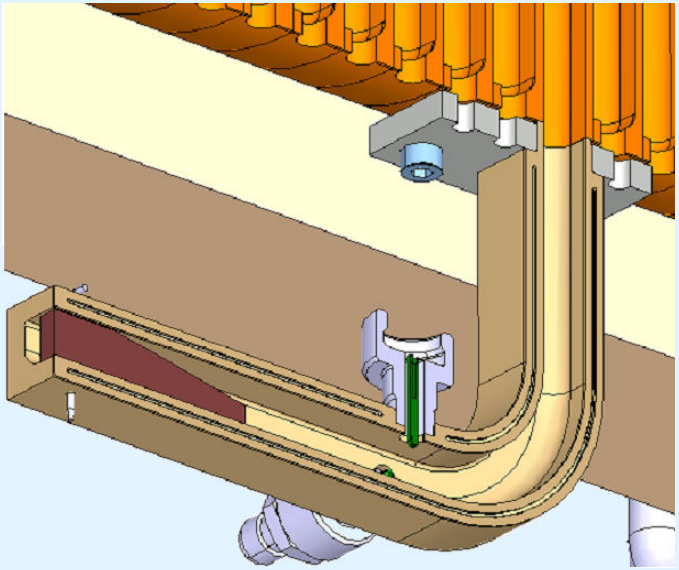

For CERN TBTS (phase 2)

PSI-ST-CERN DEVELOPMENT

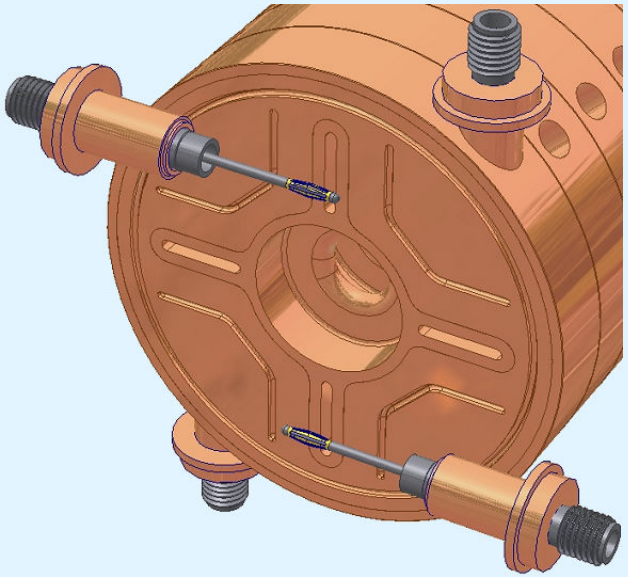

PSI-XFEL X-band structure

PSI-XFEL X-BAND STRUCTURE

Alexandre.Samochkine @ cern.ch

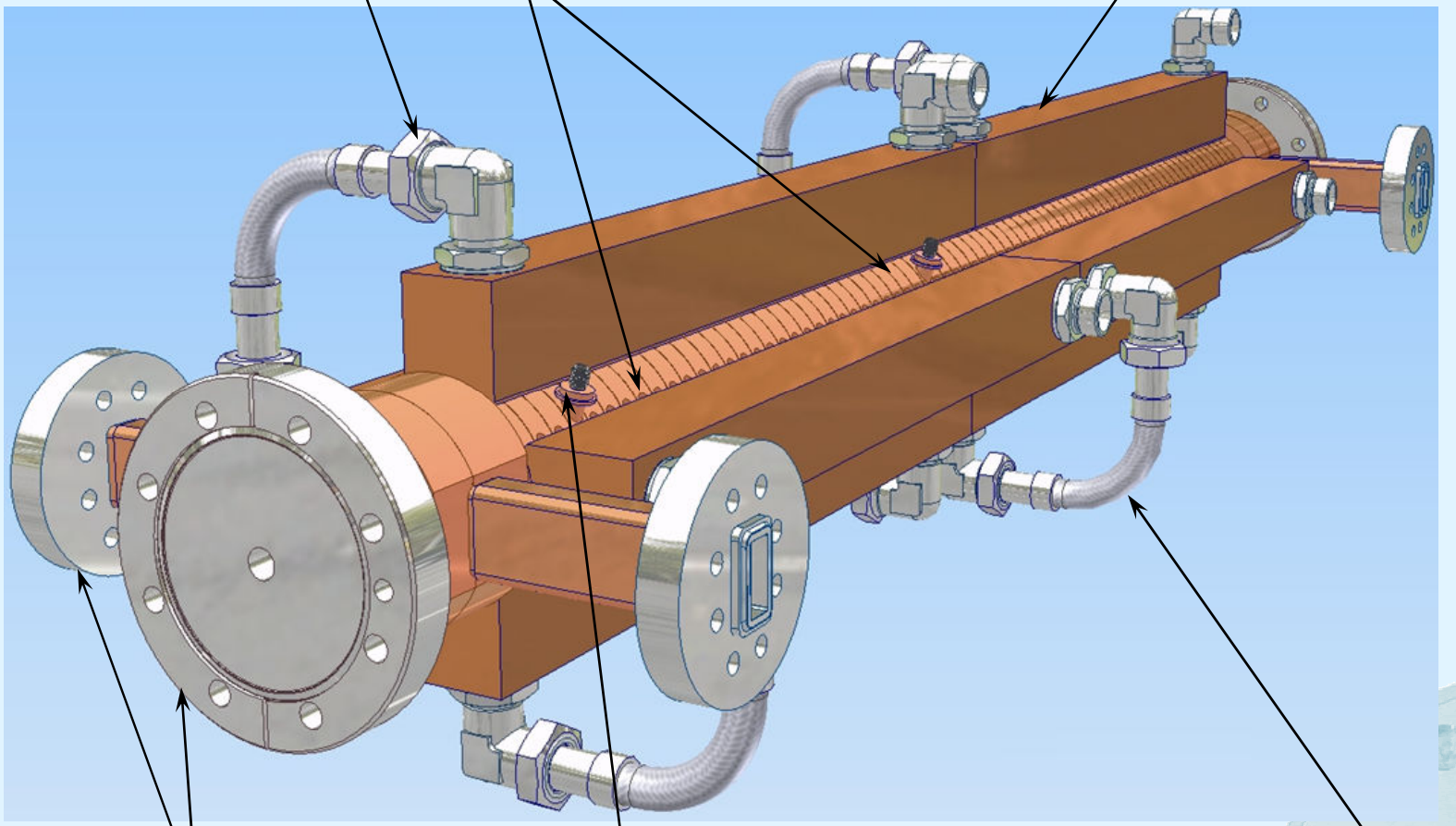

11.994 GHZ, 73 cells, non-damped, sealed, disks Ø65mm, push-pull tuning

CLEX 2BTS (*RF BEAM*)

Alexandre.Samochkine @ cern.ch

STEPS TOWARDS CLIC MODULE DESIGN

TBTS, Phase 2.2
CLEX Modules → evolution based on this design

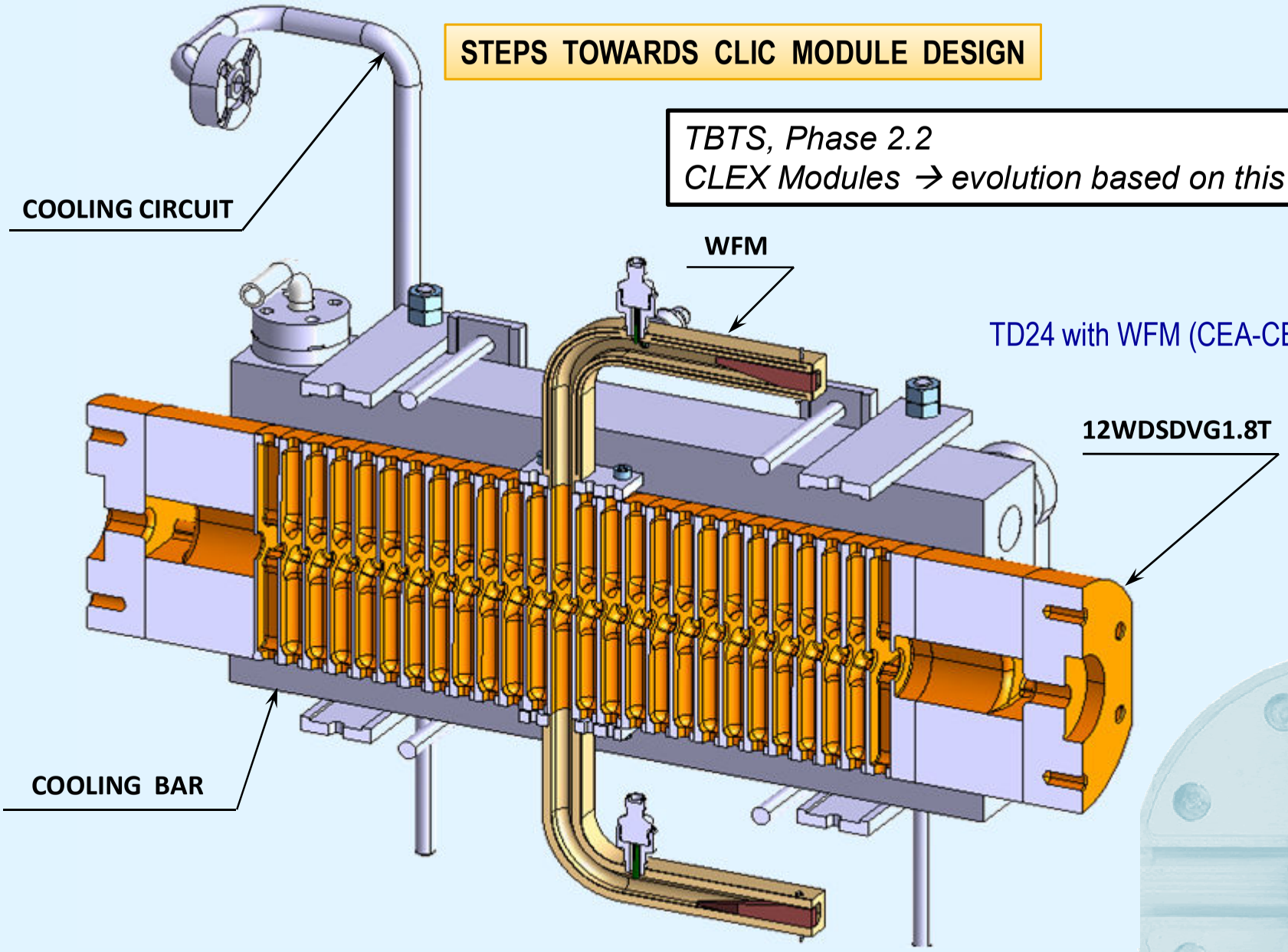

TD24 with WFM (CEA-CERN)

AS FOR CLIC MODULES

Alexandre.Samochkine @ cern.ch

STEPS TOWARDS CLIC MODULE DESIGN

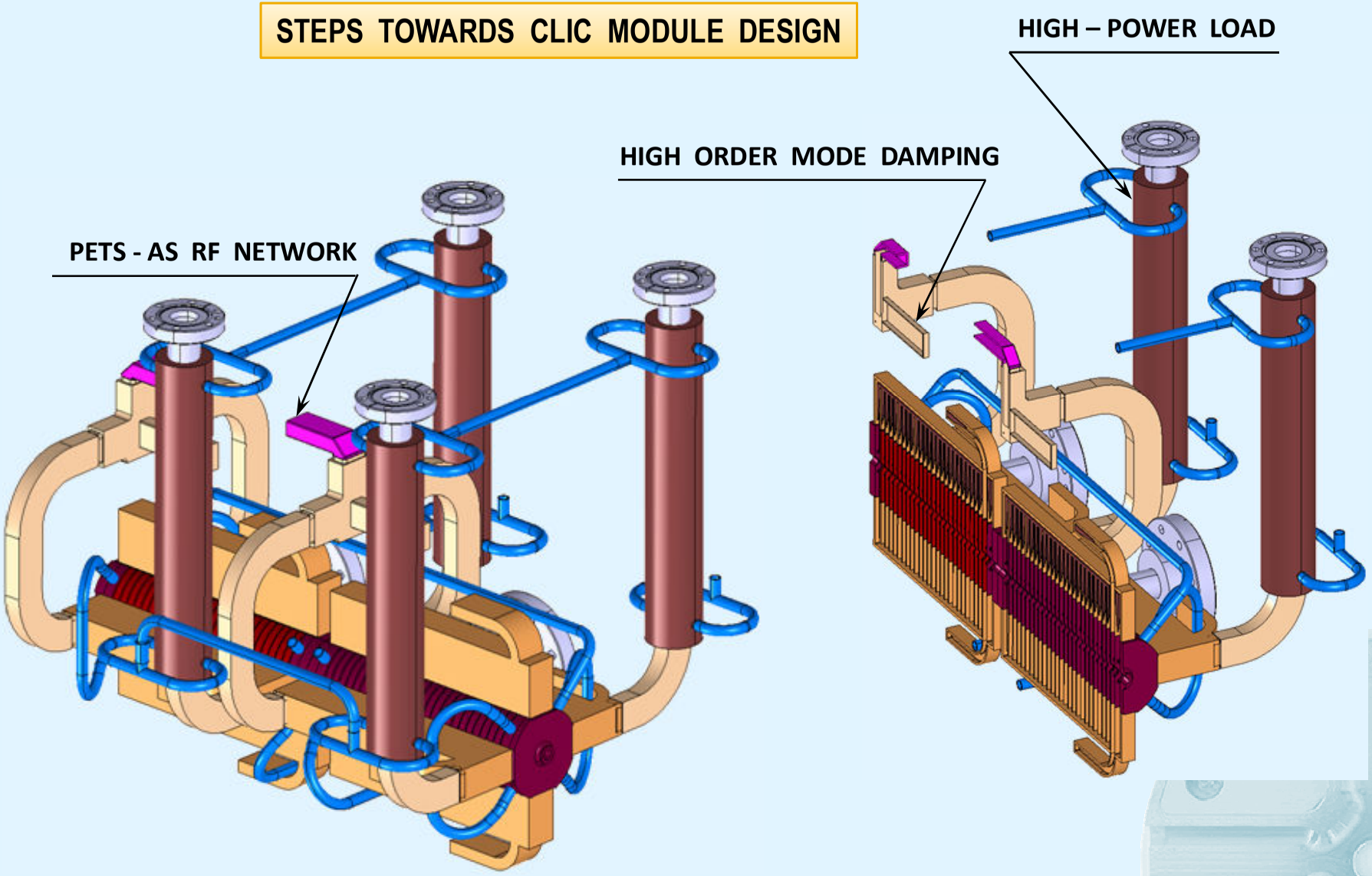

Baseline procedure

NLC/JLC fabrication technology: validated to 100 MV/m (baseline adopted in 09.2011)

Diamond machining (disks, sealed structures)

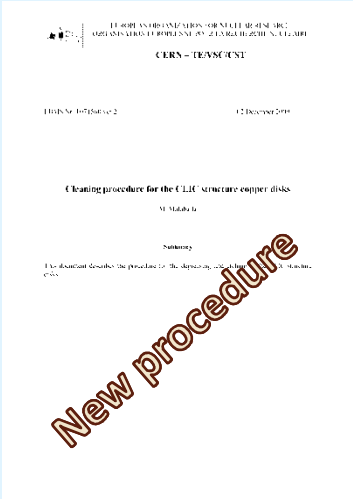

Cleaning with light etch

H2 diffusion bonding/brazing at ~ 1000 ˚C

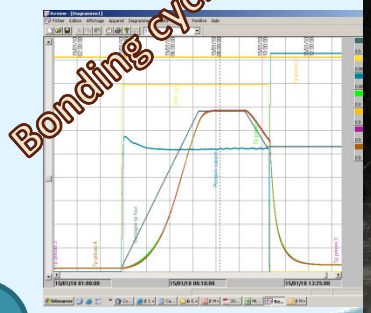

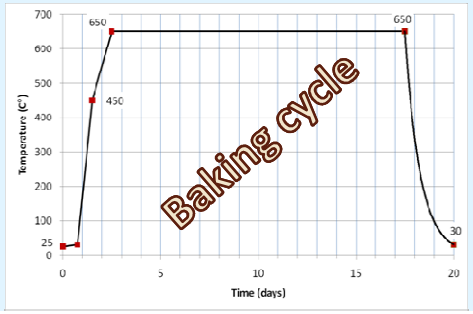

Vacuum baking 650 ˚C > 10 days

Accelerating structures: baseline manufacturing flow

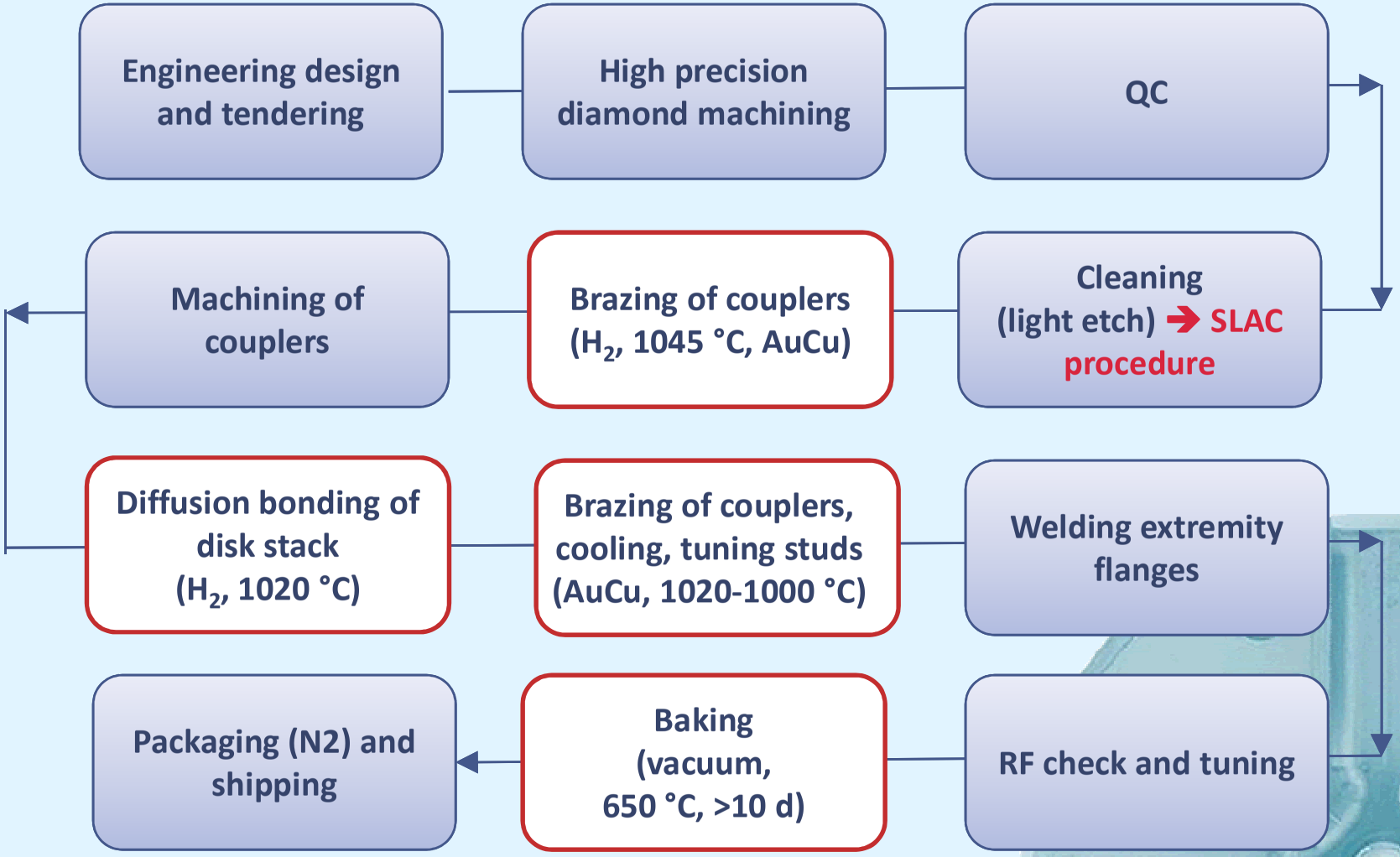

Witness sample for each fabrication step brazing./bonding: 30 mbar H2

Production base program

F = under fabrication
D = under eng. design

2010

- F — T24 undamped
- F — TD24 damped
- D — TD24 R05 KS reduced ΔT
- D — **TD24 R05 KS – reduced ΔT with damping loads**

CDR

2011

- D — TD26 KS reduced ΔT with compact coupler

- F — TD24 – with wakefield monitors

- D — CLIC structures with all features and technical systems

T18 (KS) N2

Under baking ➔ shipping to SLAC on 10.05.2010

Inlet inspection

SEM

Diffusion bonding – 1020°C

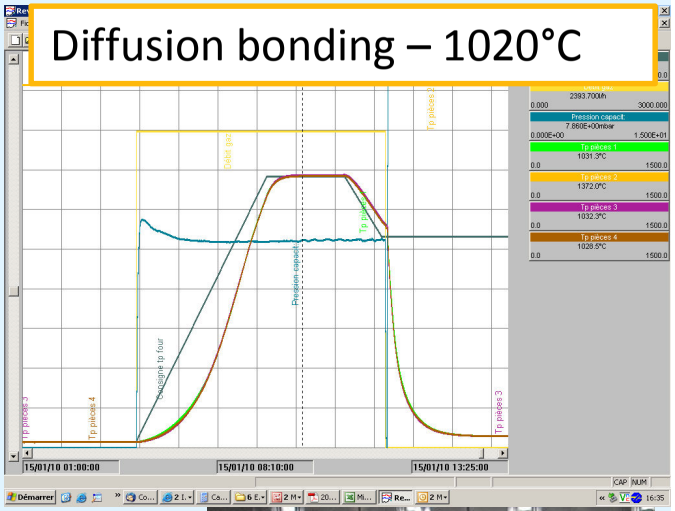

Brazing 35Au65Cu – 1021°C/1025°C

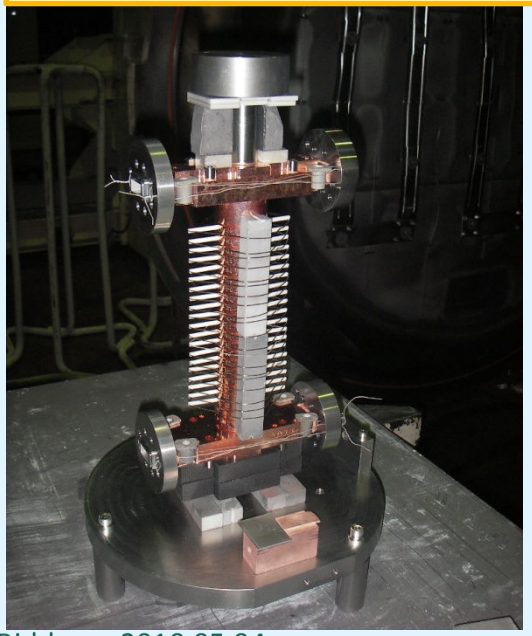

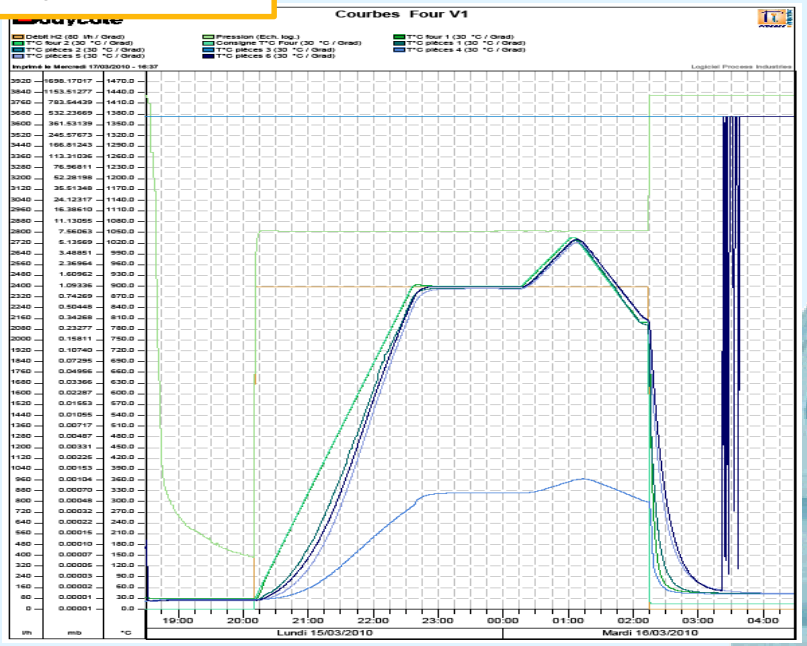

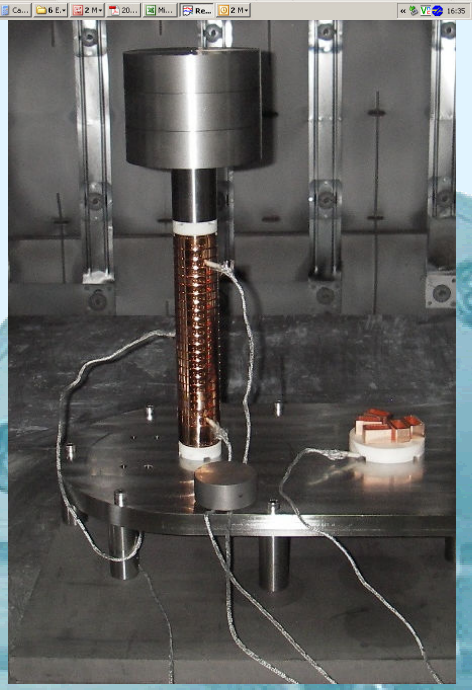

T18 (KS) N2

Preparation for final brazing

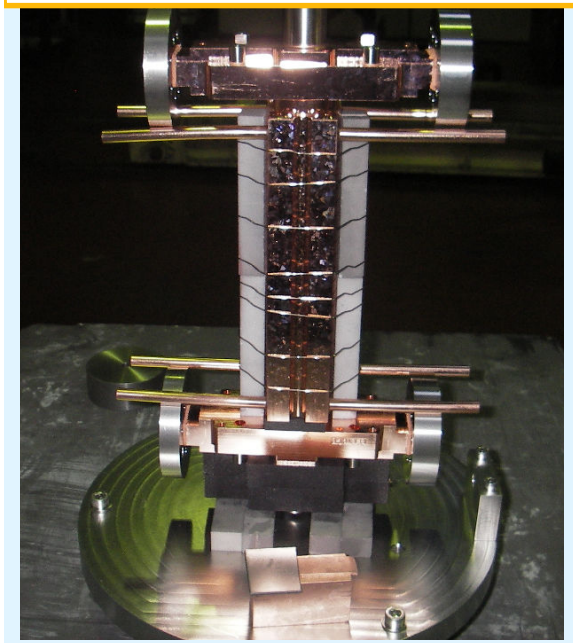

Flange welding under N2 injection

Preparation for baking

RF measurements

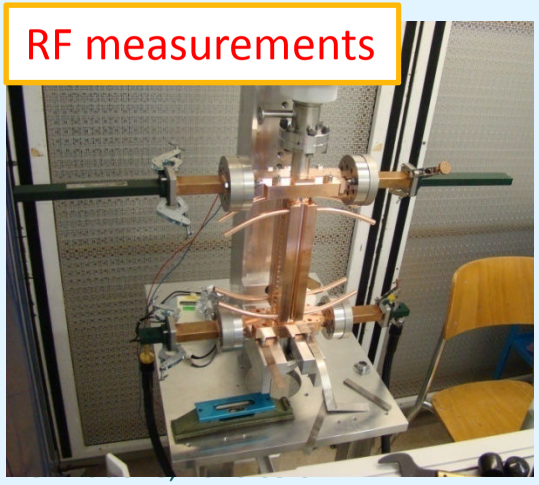

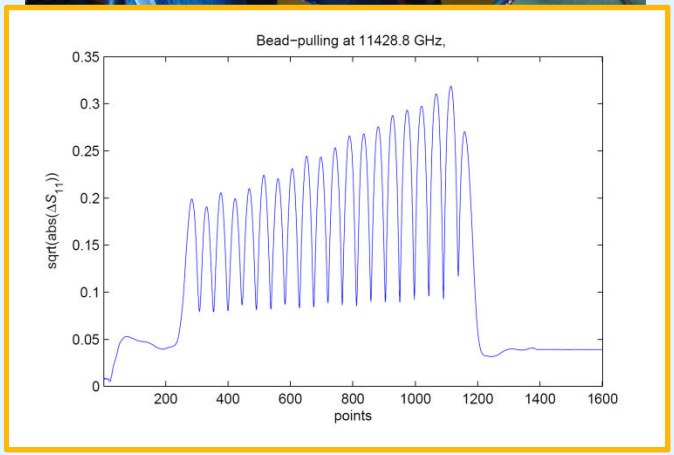

TD24 12 GHZ (TBTS)

Machining at VDL

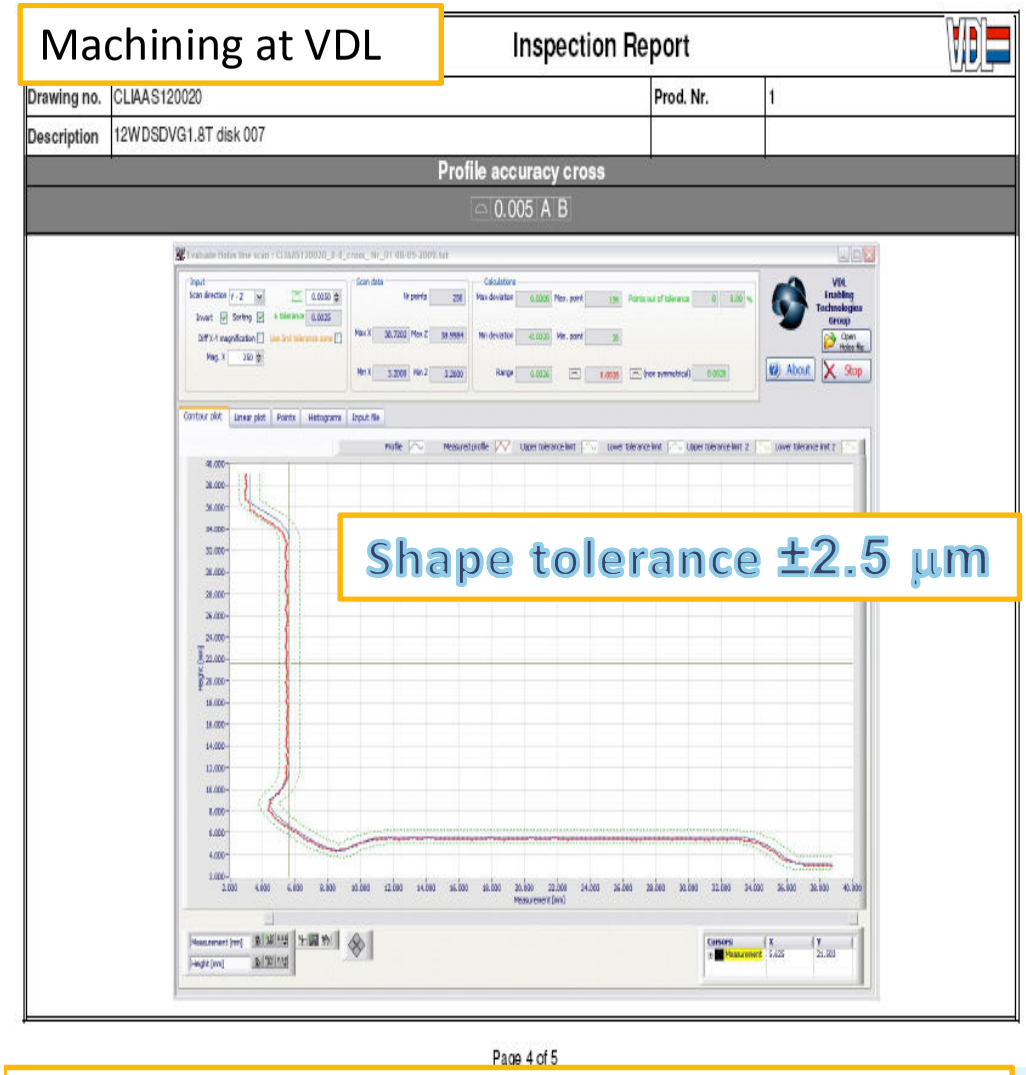

New CMM (Coordinate Measuring Machine) under procurement at CERN

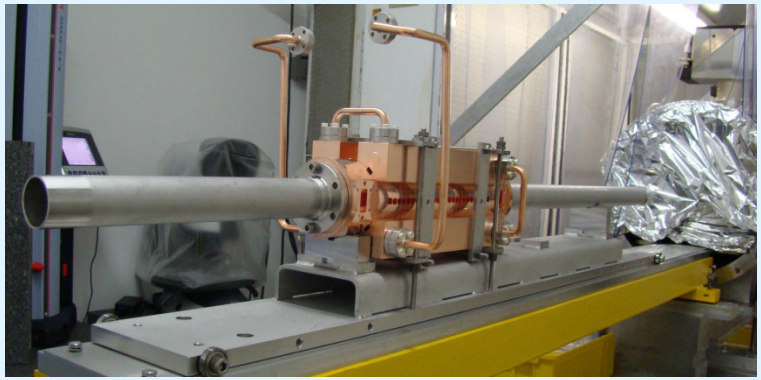

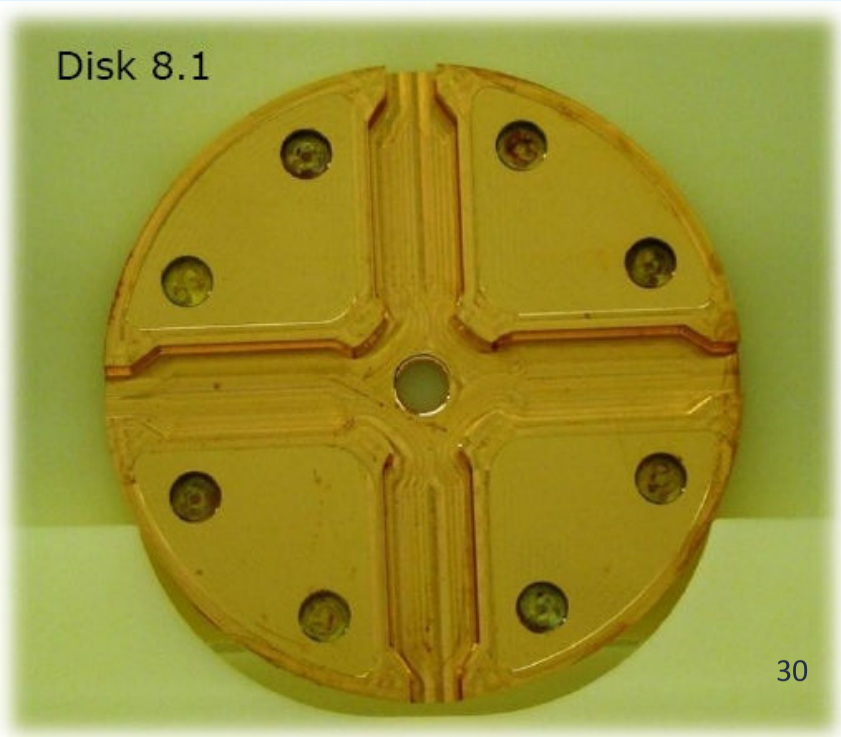

TD24 12 GHz (TBTS)

Structure installation in the tank and in the CLEX

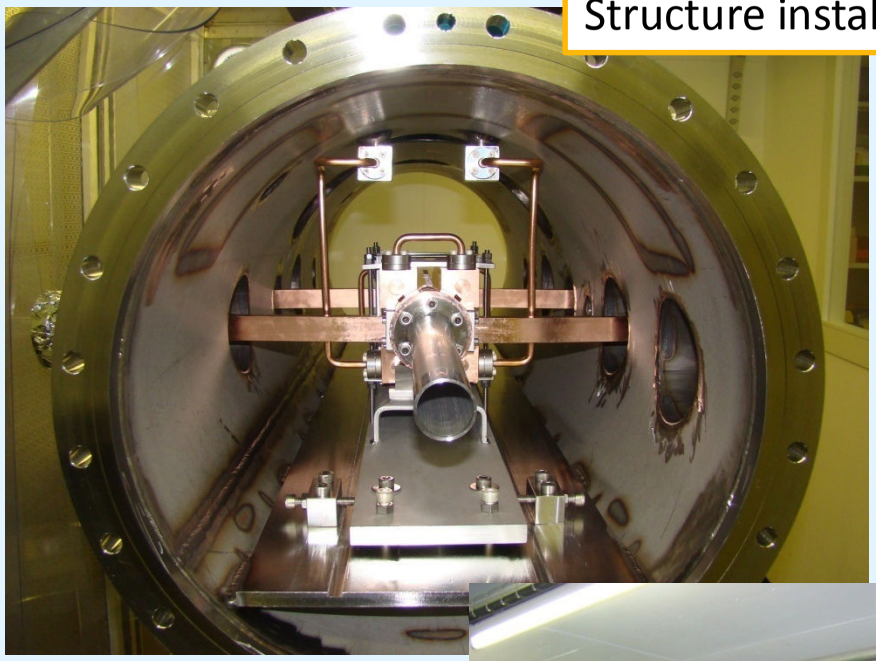

Tuning of Traveling-Wave Structures

- The Paper by T. Khabiboulline[1,2]
  - ☺ Tuning by bead-pull measurement
  - ☺ Calculate forward and backward wave of each cell
  - 😐? Correction while monitoring S_{11}
  - ?? Output cell (the paper assume it has been tuned)
  - ?? The reflection ~ the frequency detuning

Internal Report
DESY M-95-02
1995

Tuning of a 50-cell constant gradient S-band travelling wave accelerating structure by using a nonresonant perturbation method.

by

T. Khabiboulline
Institute of Nuclear Research, INR
Profsojuznaja 7a, 117312 Moscow, Russia

M. Dohlus, N. Holtkamp
Deutsches Elektronen-Synchrotron, DESY
Notkestraße 85, 22609 Hamburg, Germany

[1] DESY M-95-02, 1995
[2] PAC95, P1666

Reflection due to Frequency Detuning

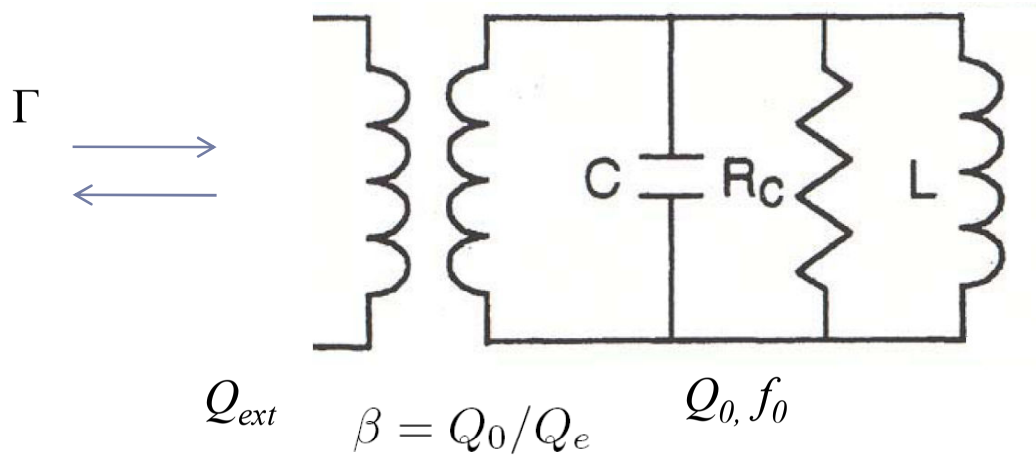

$$\Gamma = \frac{(\beta-1)(\beta+1) - Q_0^2(\Delta F)^2}{(\beta+1)^2 + Q_0^2(\Delta F)^2} - j\frac{2\beta Q_0 \Delta F}{(\beta+1)^2 + Q_0^2(\Delta F)^2}$$

$$\Delta F = \frac{f}{f_0} - \frac{f_0}{f} \qquad \Delta F = -2\Delta f_0/f_0 \quad \text{if} \quad \Delta f_0 << f_0$$

Summary of the method

1. Do bead-pull measurement
2. Calculate forward and backward wave along the structure
3. Calculate local reflection of each cell
4. Calculate global reflection change due to local reflection change
5. Tuning each cell while monitoring the global reflection
   1. Start from output side
   2. Several iteration
6. Tuning the input cell to a minimum reflection

CLIC-G (TD24) N2 at 11.424 GHz

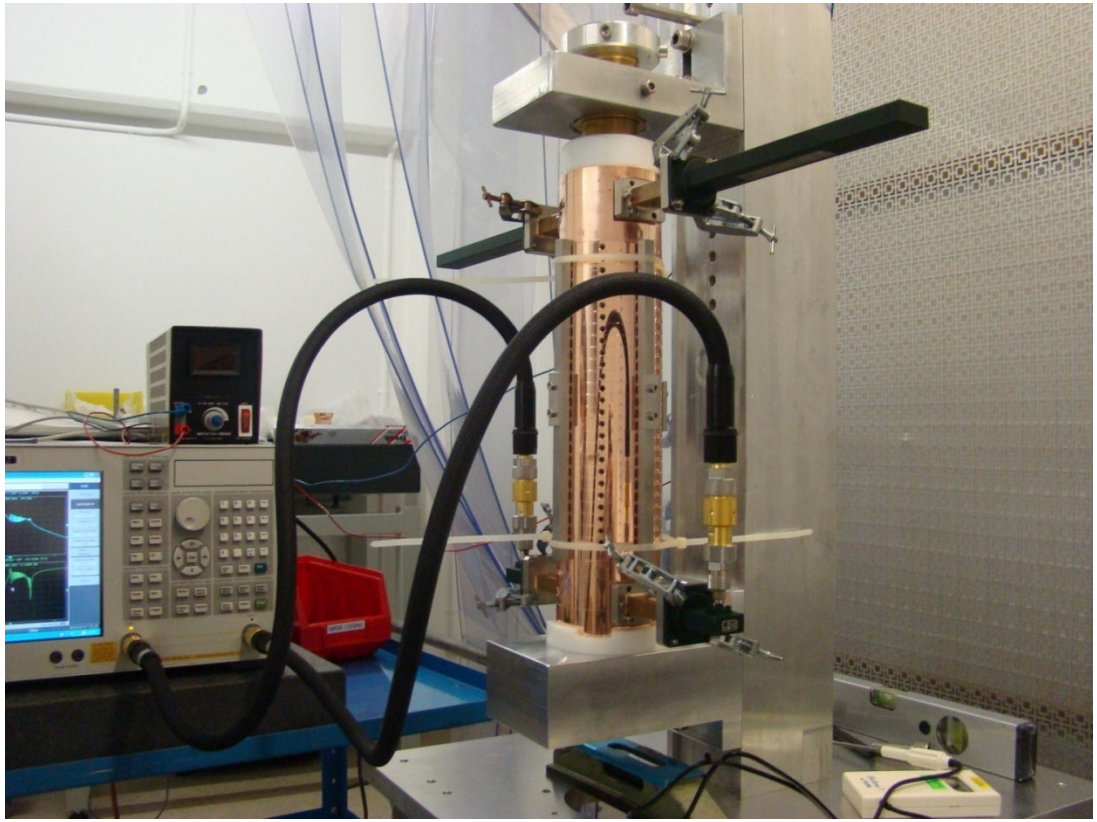

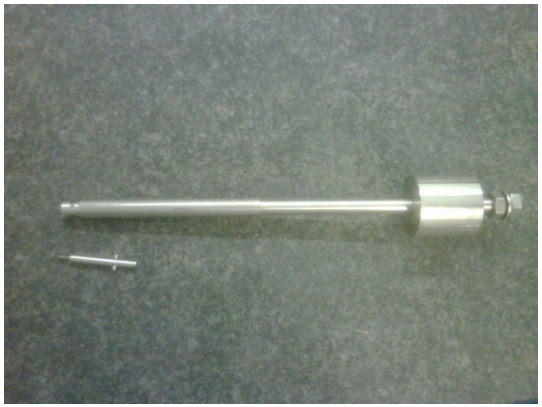

First diagnose

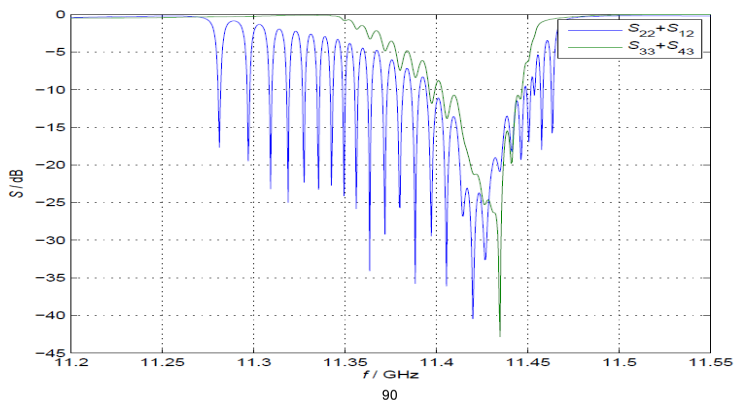

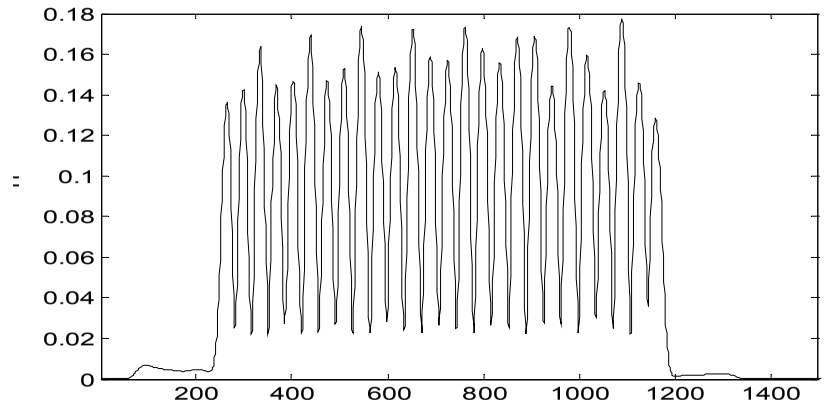

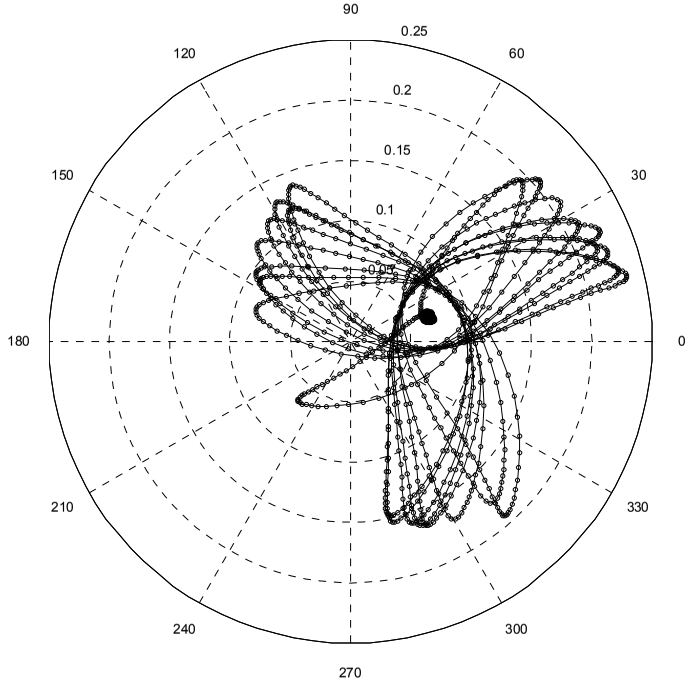

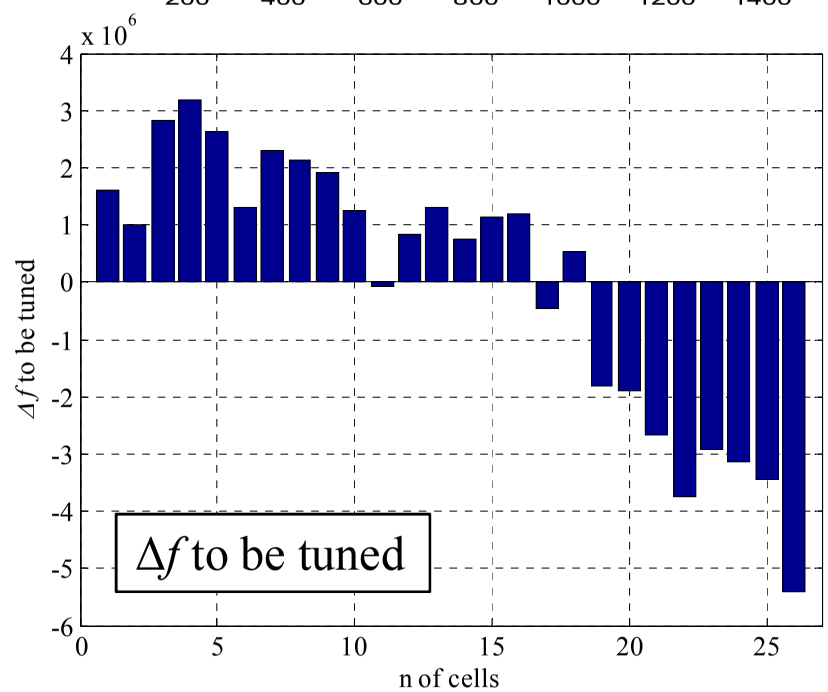

First tuning (the output matching cell)

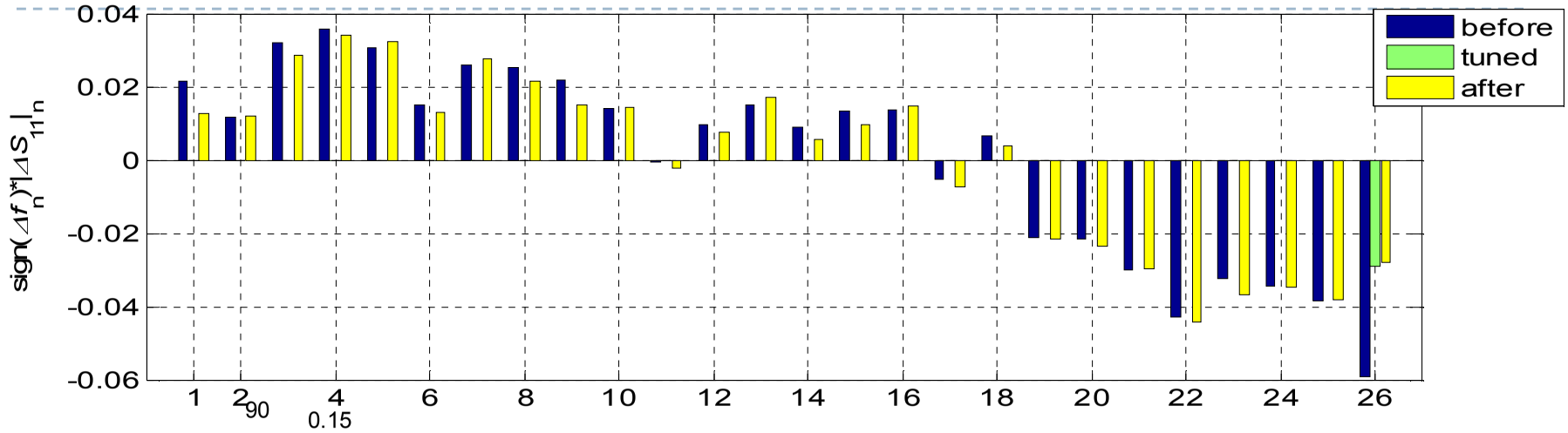

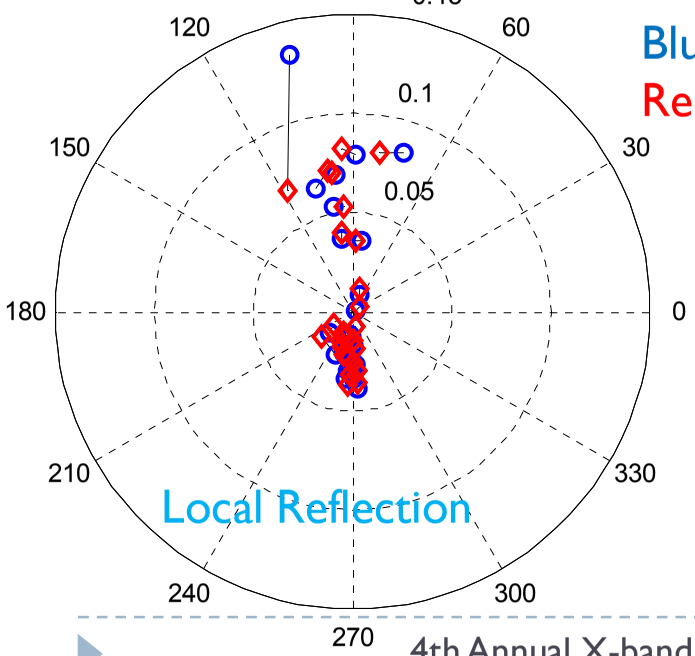

Blue: before

Red: after

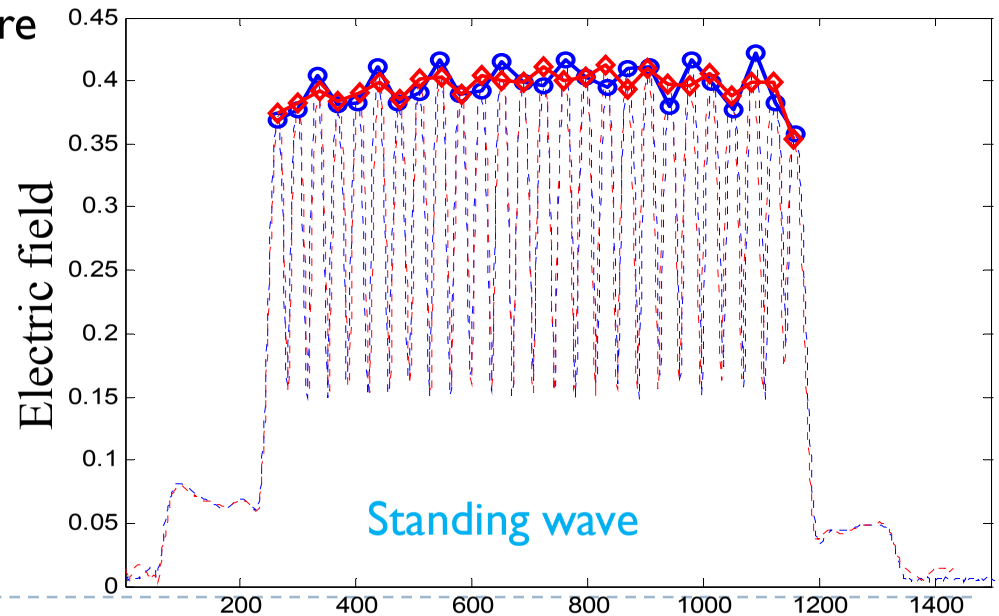

2nd tuning (10 worst cells)

Blue: before

Red: after

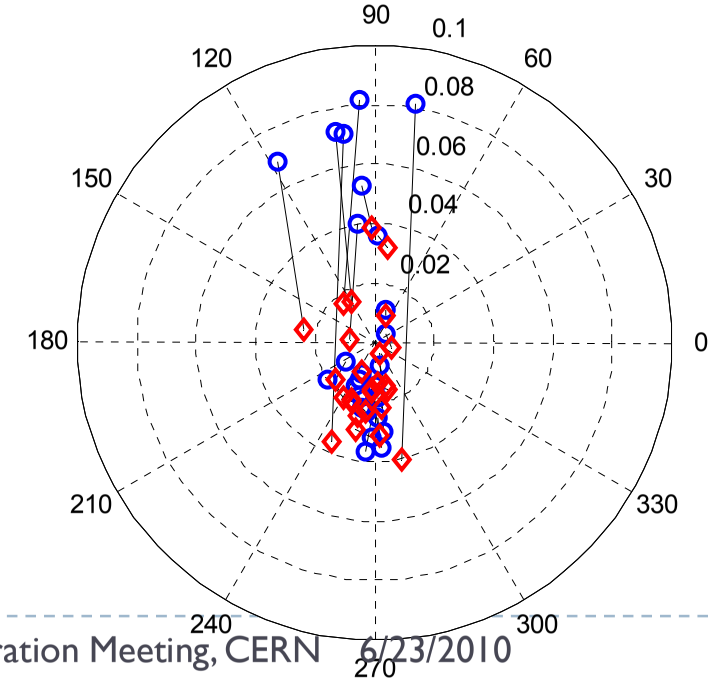

Local Reflection

3rd tuning

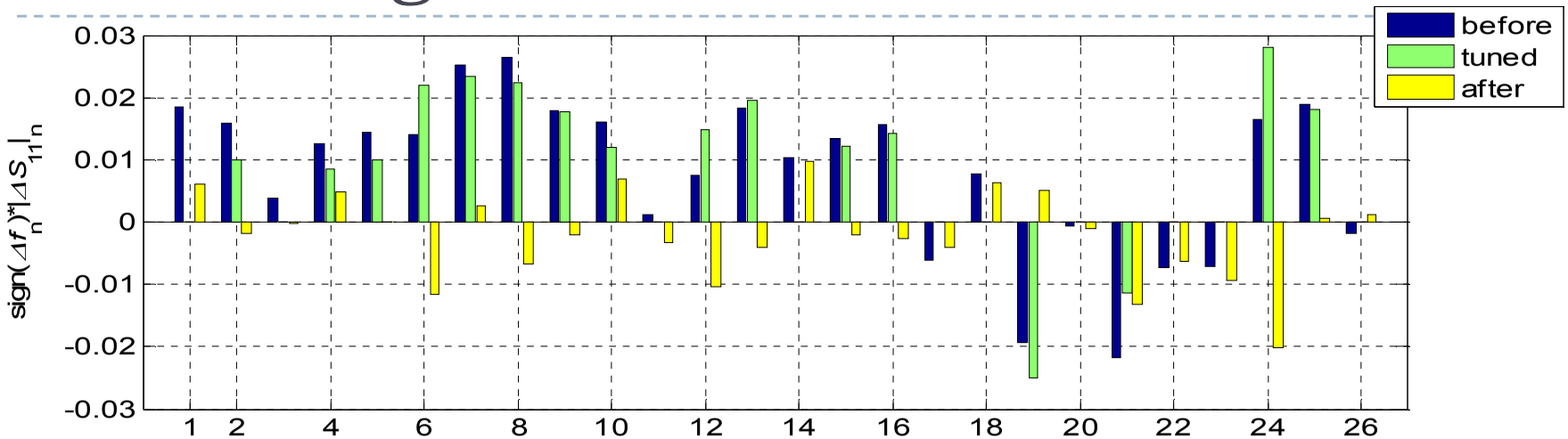
before
tuned
after
0.03
0.02
0.01
0
-0.01
-0.02
-0.03
1 2 4 6 8 10 12 14 16 18 20 22 24 26

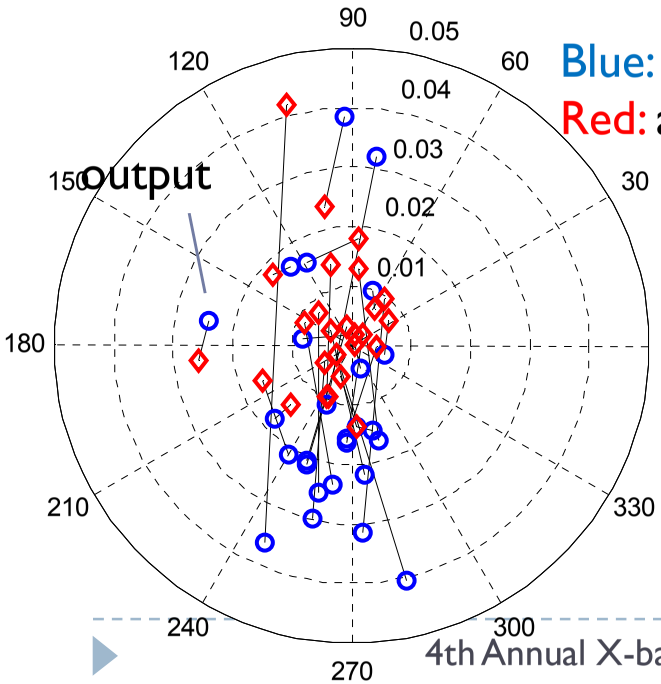
output
Blue: before
Red: after
0.05
0.04
0.03
0.02
0.01
90
120
60
150
30
180
0
210
330
240
300
270

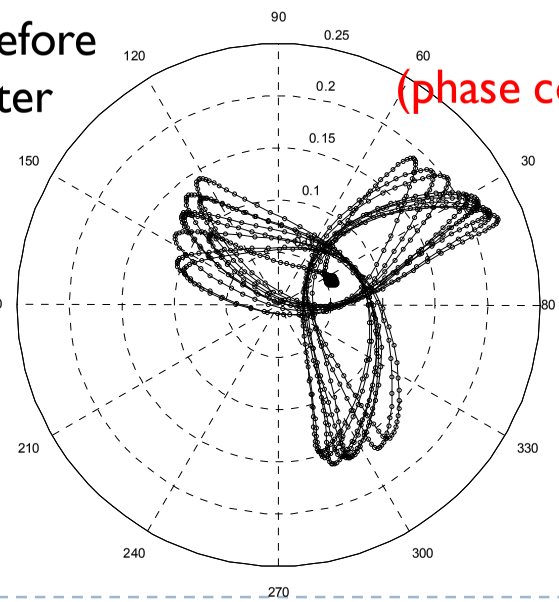
(phase correction)
0.25
0.2
0.15
0.1
90
120
60
150
30
180
0
210
330
240
300
270

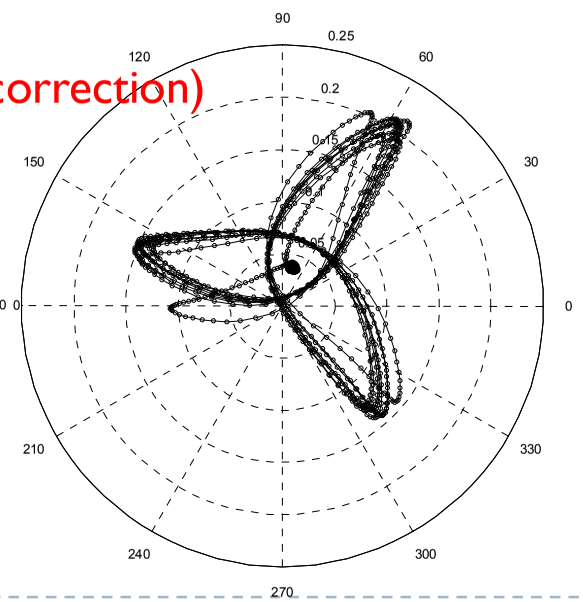
0.25
0.2
0.15
90
120
60
150
30
0
210
330
240
300
270

4th tuning and the input matching cell

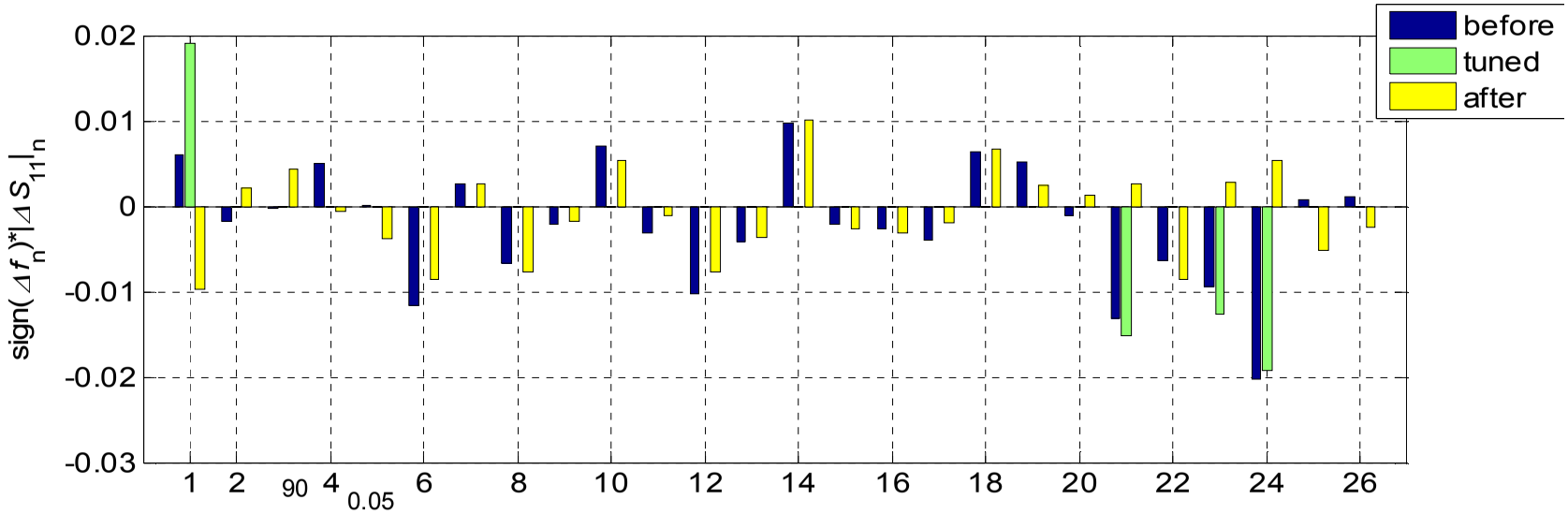

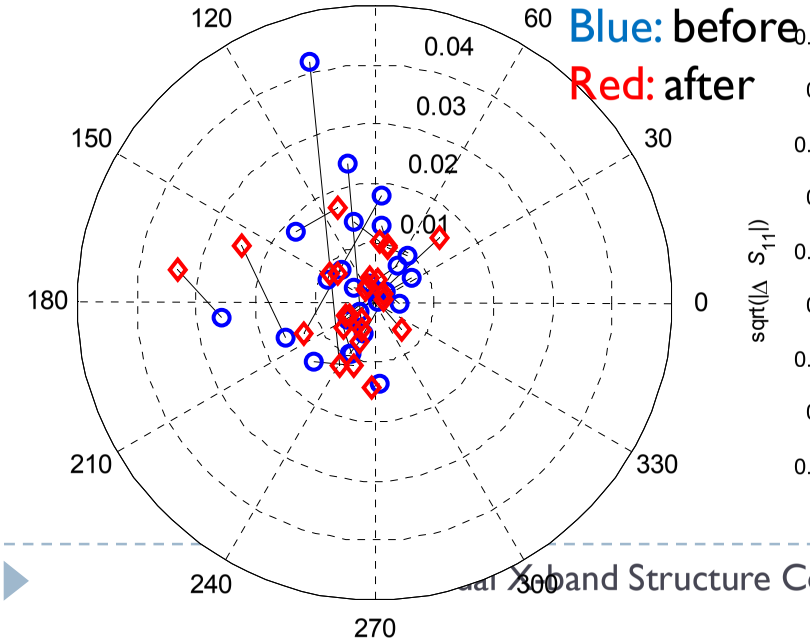

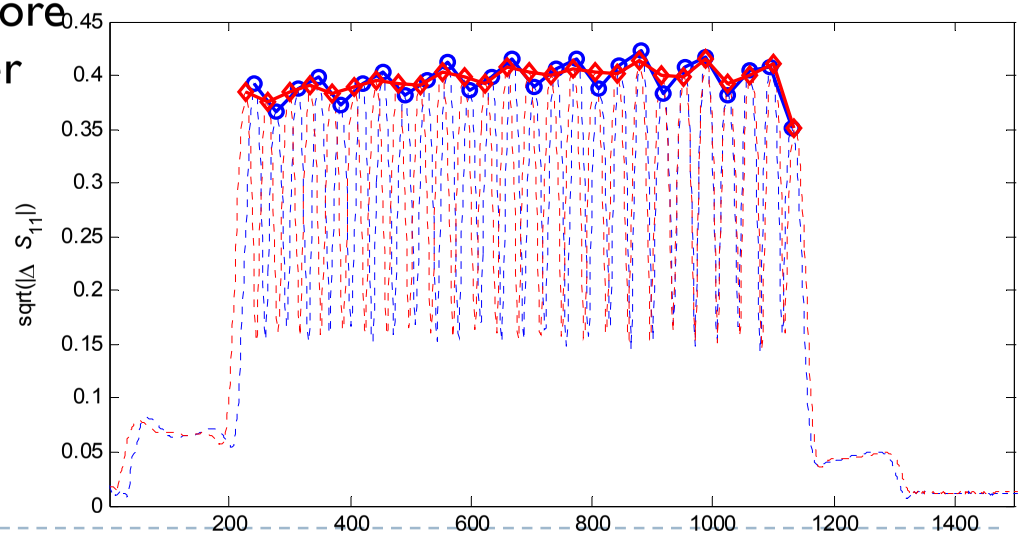

Summary of Tuning TD24

- Measurement condition

date :	19-Mar-2010
location:	CERN
VNA Model:	Agilent E5710C
temperature:	20.5°C
Designed frequency at $2\pi/3$:	11.424 GHz
High-power temperature:	30°C
Δf due to air $\Rightarrow$ vacuum:	+3.3 MHz
20.5°C $\Rightarrow$ 30°C:	−1.8 MHz
w/ $\Rightarrow$ w/o wire:	−0.3 MHz
(total):	+1.2 MHz
Target f under measurement condition (w/ wire, air, 20.5°C):	11422.8 MHz

- Push and Pull are applied in 4 iterations
- Maximum frequency correction ~6MHz
- Phase adv 120.1° / cell
- Standing-wave from output reflection (real part)

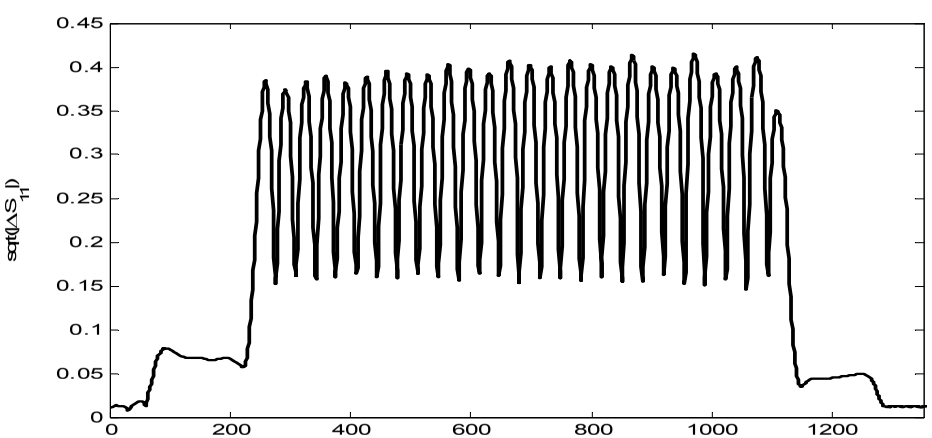

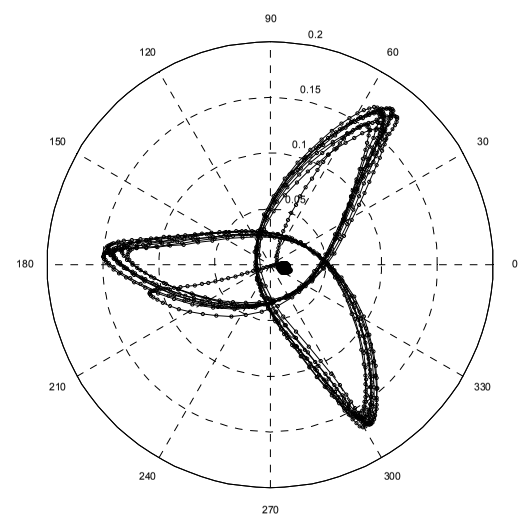

T18

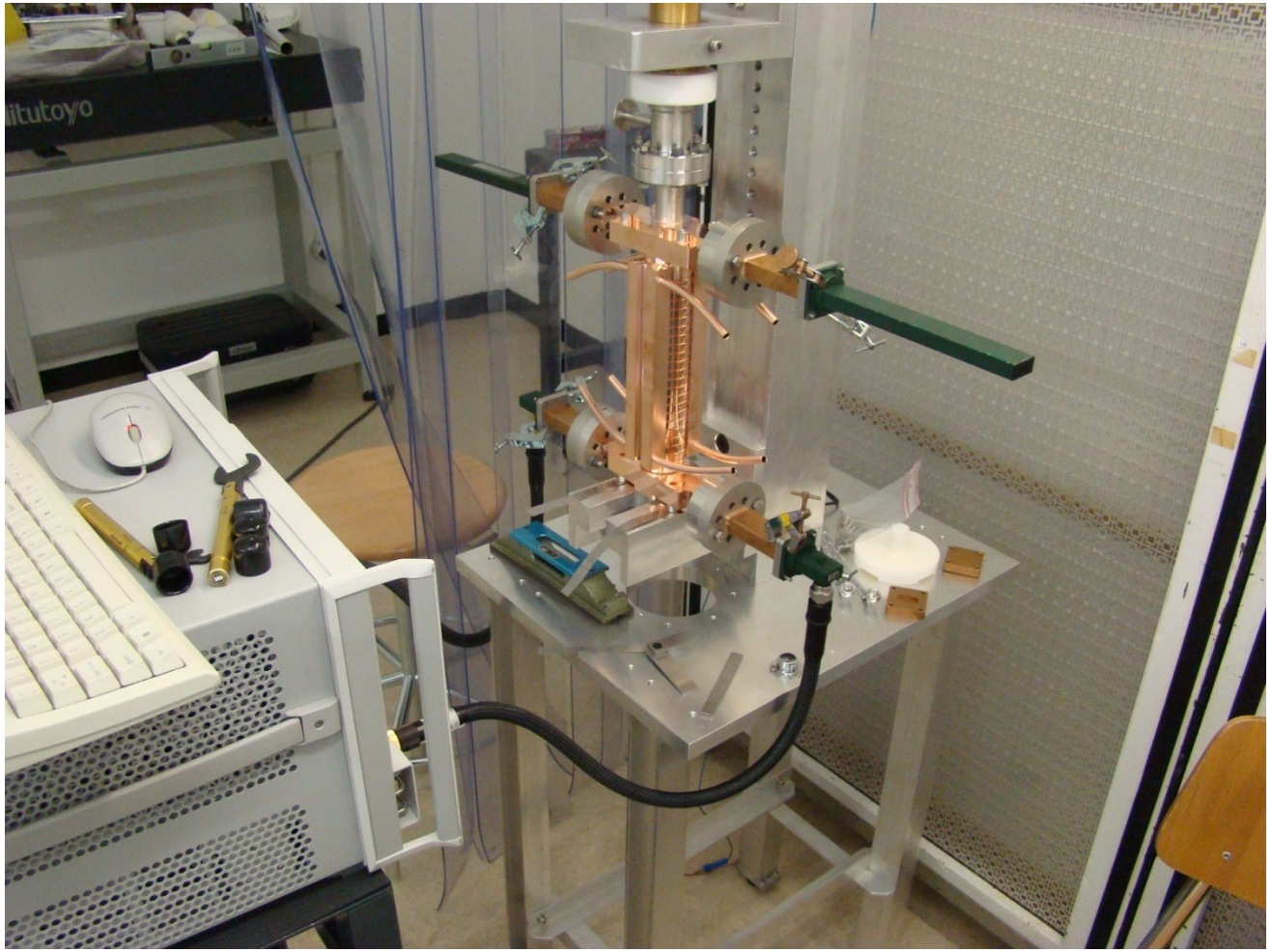

T18

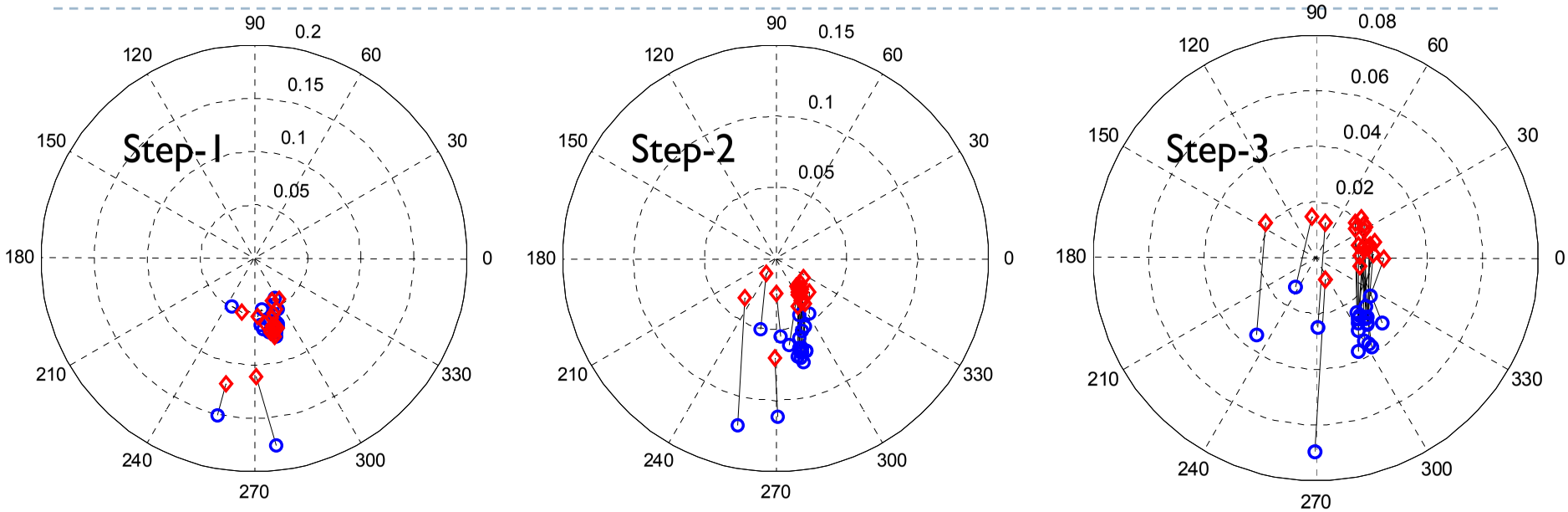

Local reflection of each cell

Blue: before tuning

Red: after tuning

Real part: from tapering (vg)

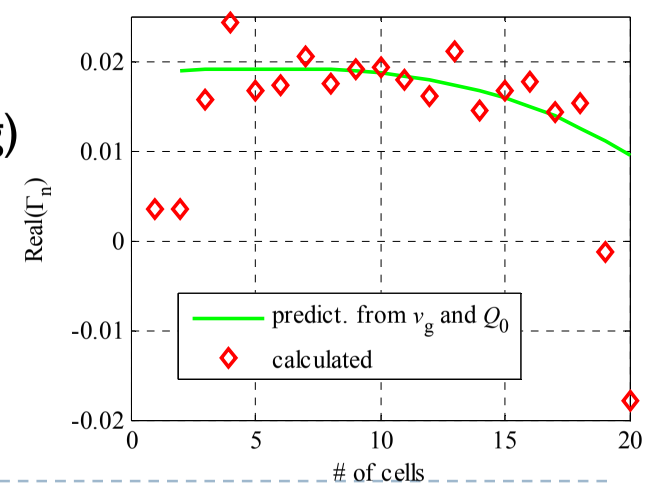

$$\Gamma = \boxed{\frac{(\beta-1)(\beta+1)-Q_0^2(\Delta F)^2}{(\beta+1)^2+Q_0^2(\Delta F)^2}} - j\frac{2\beta Q_0 \Delta F}{(\beta+1)^2+Q_0^2(\Delta F)^2}$$

Summary of Tuning T18

- To SLAC Temperature
- Only push, 3-steps
  - Output 8 MHz
  - Input 20 MHz !
  - Regular cells 3~6 MHz
- phi = 119.9
- Real part from tapering

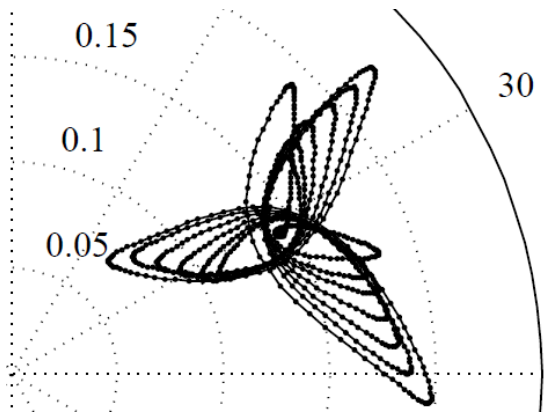

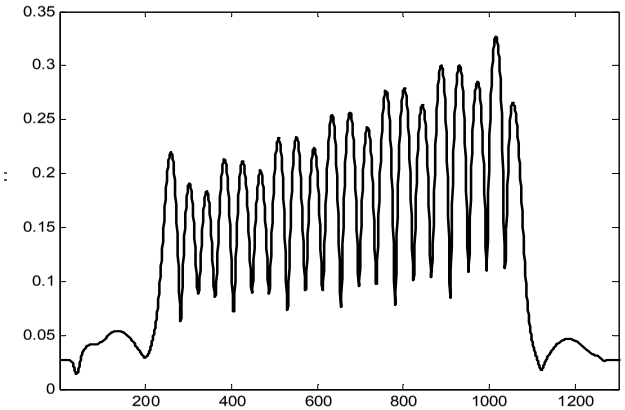

Before tuning (4MHz lower) ^^^

After tuning

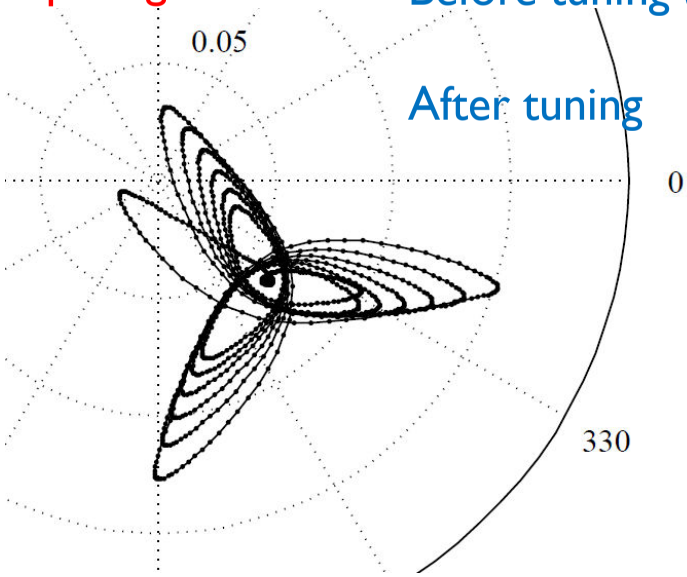

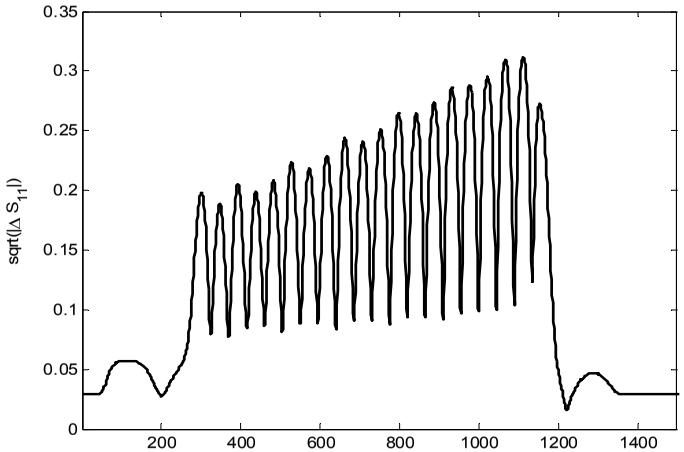

Compensate output coupling (proposal)

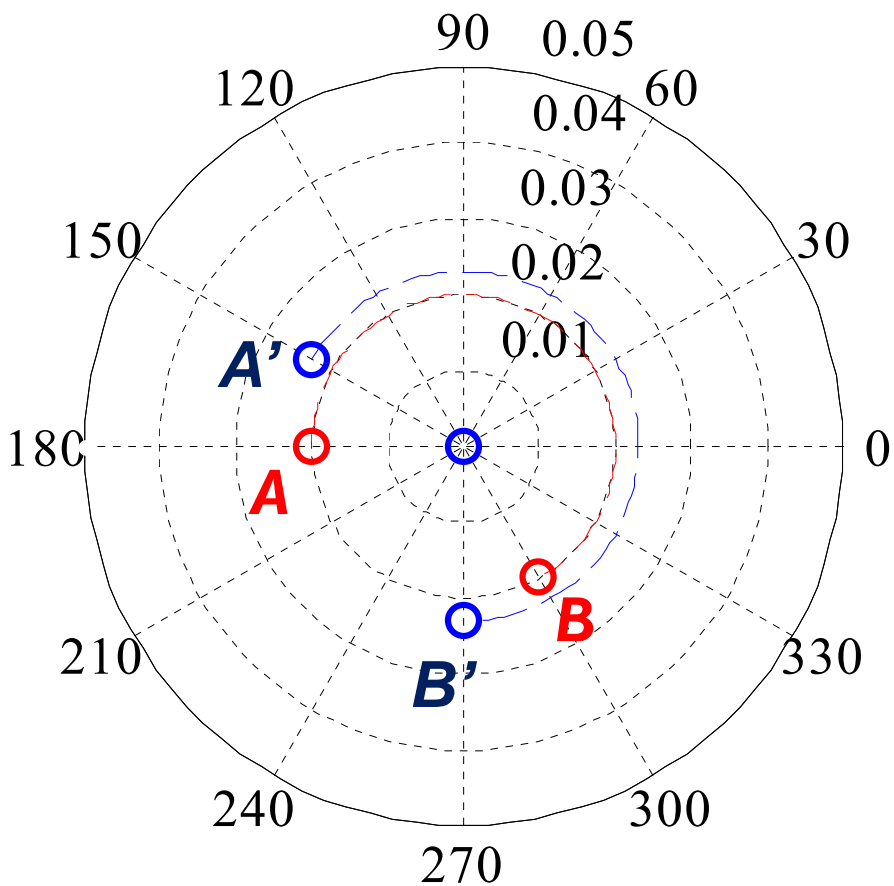

- The Points
  - *A*: Reflection of output matching cell (Γ_N) due to coupling iris error
  - *B*: Γ_N seen at *N*-1 Cell
  - *A'*: Reflection from detuned output cell Γ_N'
  - *B'*: Γ_N' seen at *N*-1 Cell
  - *O*: Γ_N' can be cancelled by detuning the *N*-1 Cell
- High accuracy required

Summary for Structure Tuning

- Accuracy
  - ±0.005 (-45dB) for local reflection (from experience)
  - The model
    - vg along the structure is important
    - Calculation of the output matching cell is not so accurate because of the different cell shape
    - Calculation of the input matching cell need to correct the phase (use bead perturbation as reference), the last to tune.
  - The real part of the local reflection can not be corrected
    - From Tapering. Good agreement!
    - Output matching iris error cause standing wave. May be compensated by detuning the #(N-1) and the output cell

Summary for Structure Tuning

- Integrated software tool under development

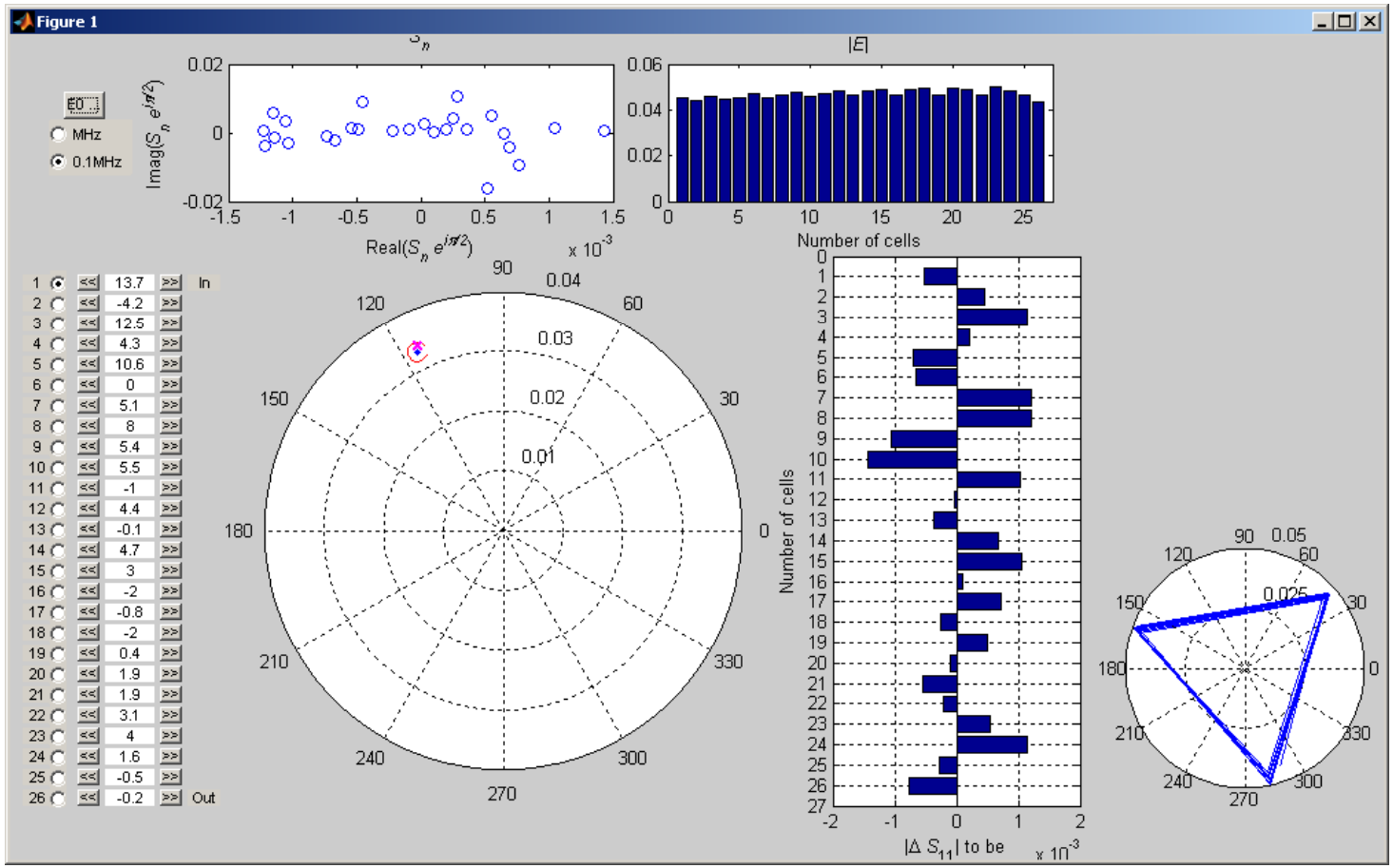

High Power Testing

X-band test facilities at SLAC and KEK

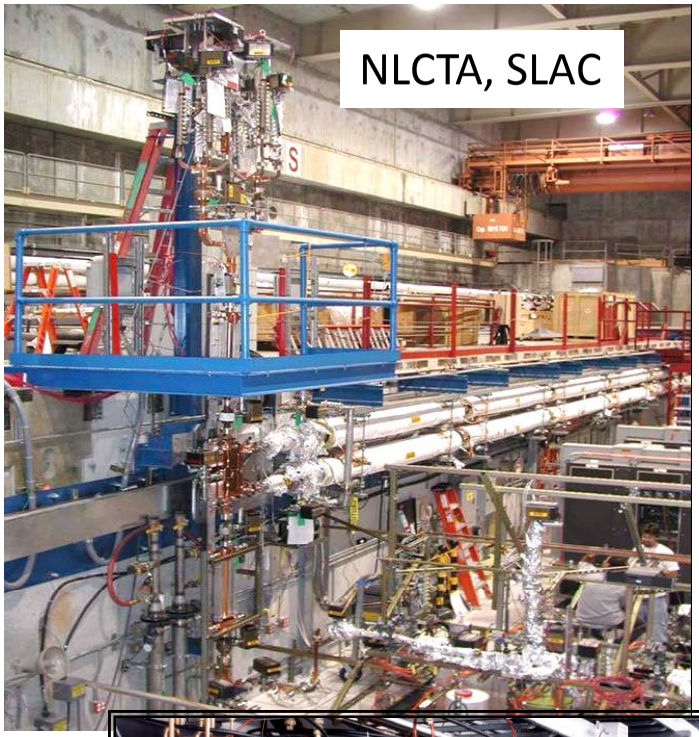

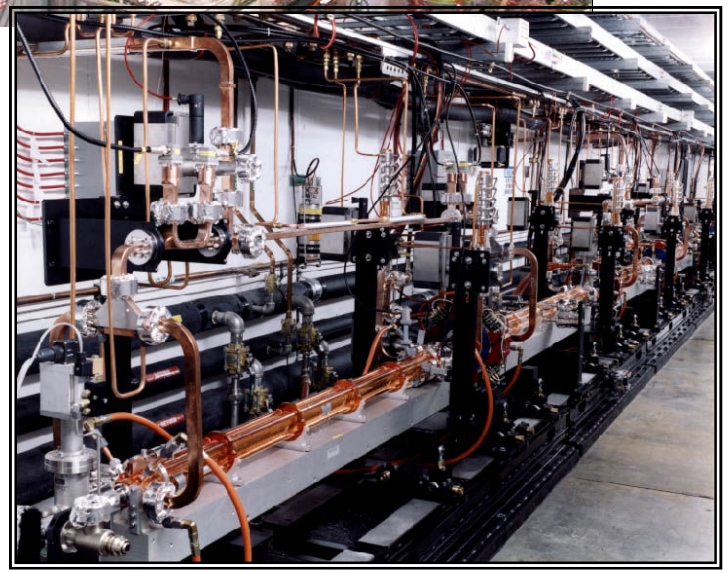

NEXTEF, KEK

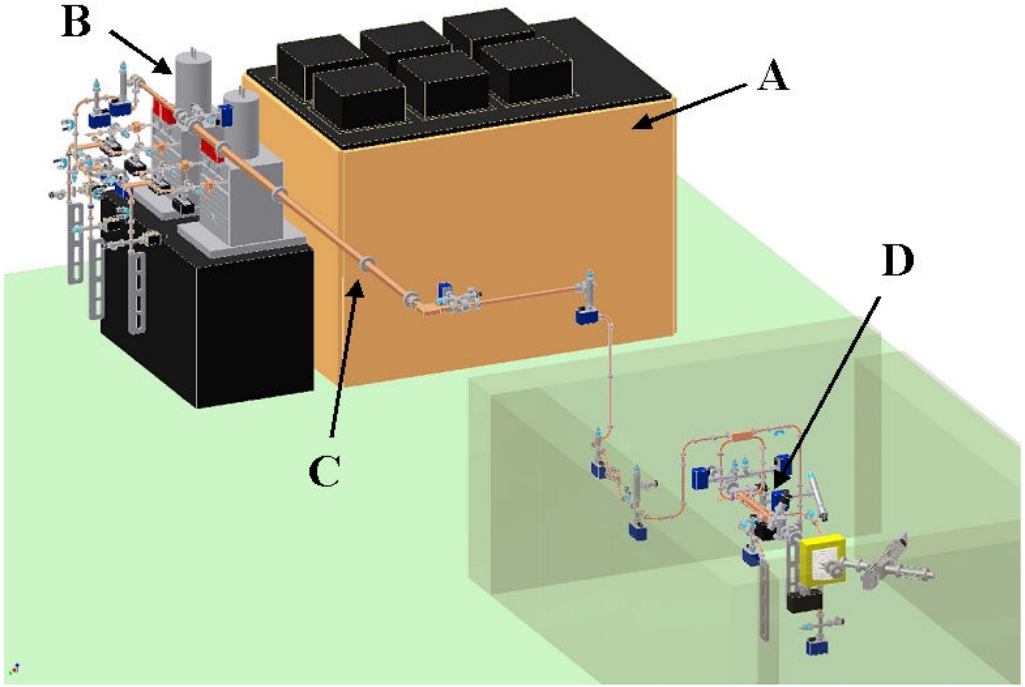

A: Modulator
B: Klystrons
C: Low Loss Power Transfer Line
D: Accelerating structure under test in Shield-A

CERN X-band Test-Stand

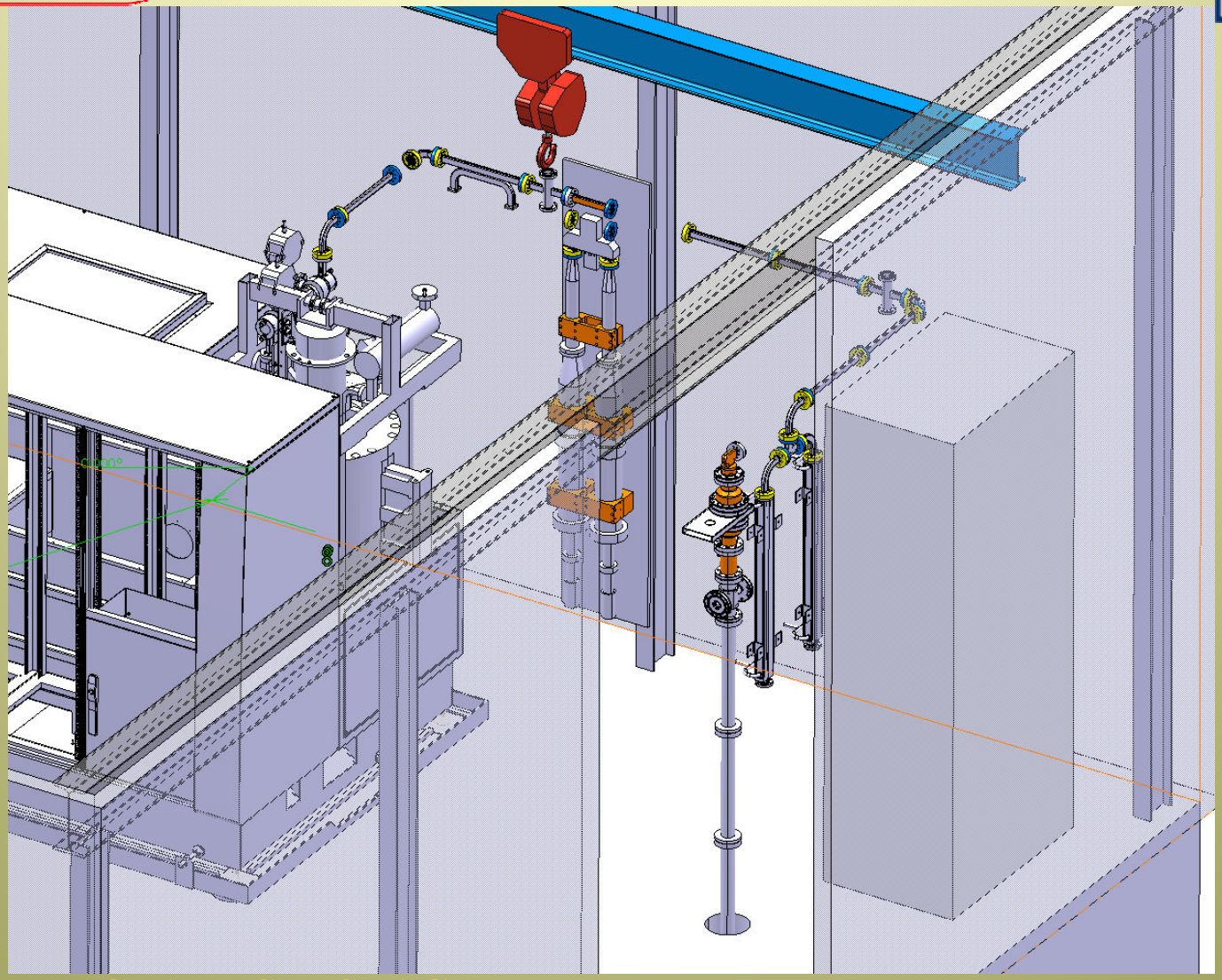

CERN - CEA – PSI – SLAC

Stand alone Test Stand in CTFII

Courtesy: S. Doebert

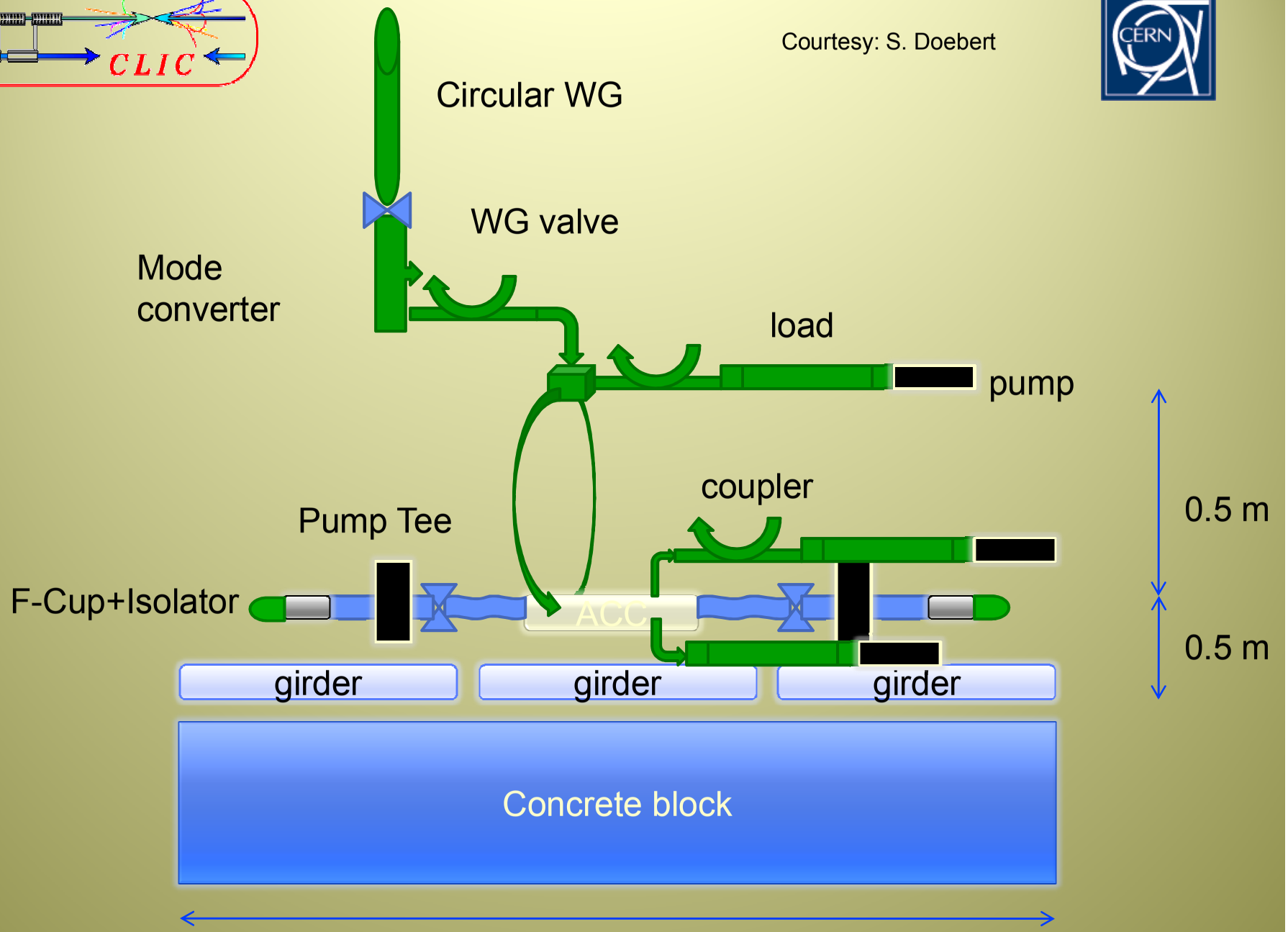

Solid State Modulator by SCANDINOVA

It is installed at CTF3 klystron gallery and the tests to the dummy load are foreseen at the end of June.

SLAC XL5 @ 12 GHz

It has been tested at SLAC,
It has shown very good performance
BUT it is still at SLAC…

Pulse Compressor (Gycom)

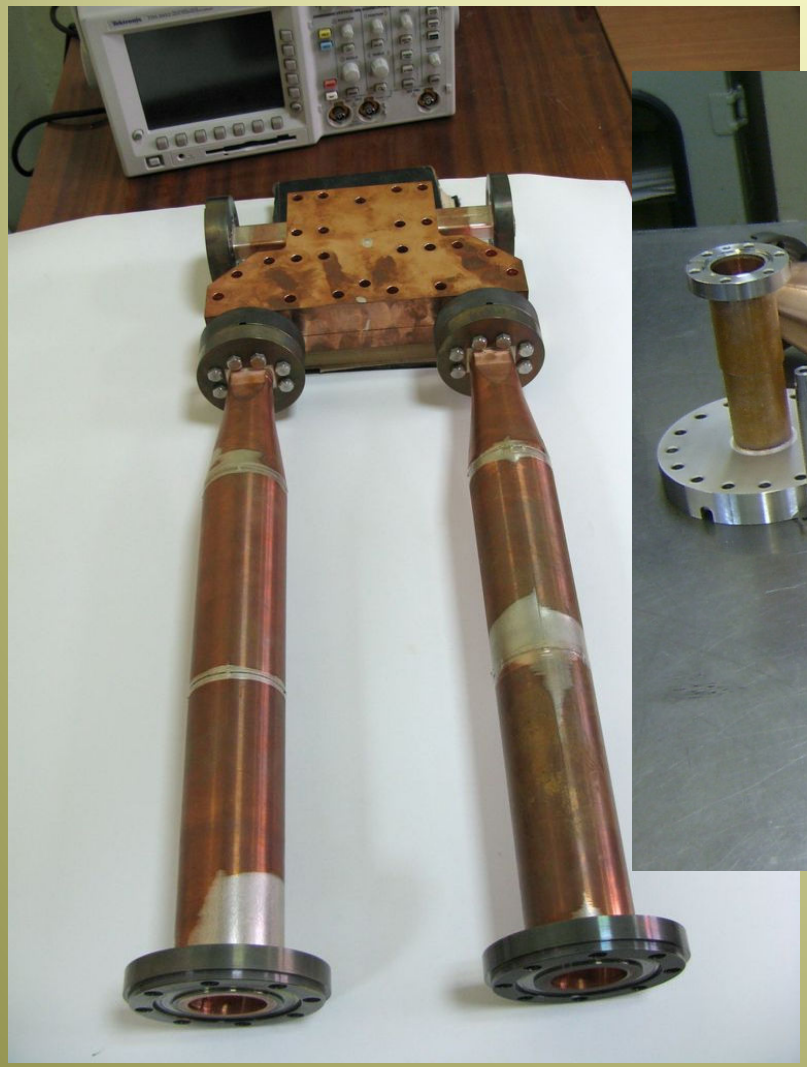

Components

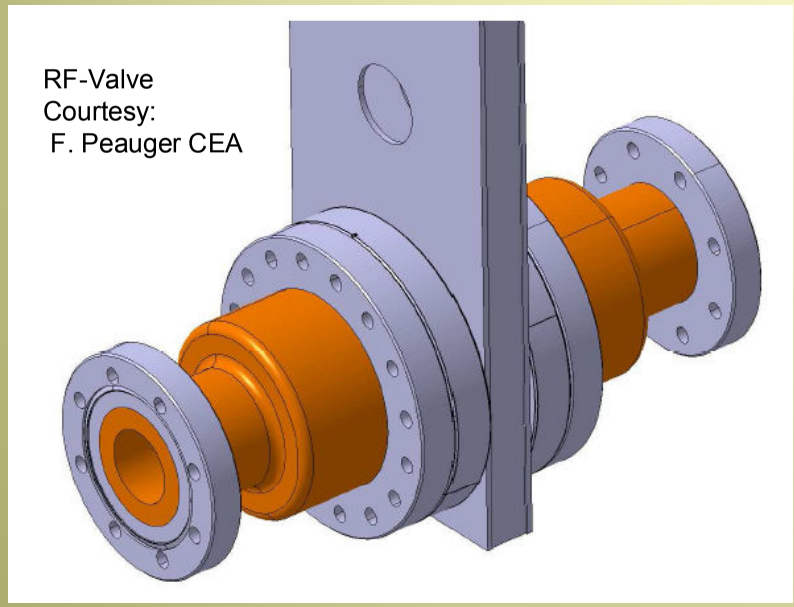
RF-Valve
Courtesy:
F. Peauger CEA

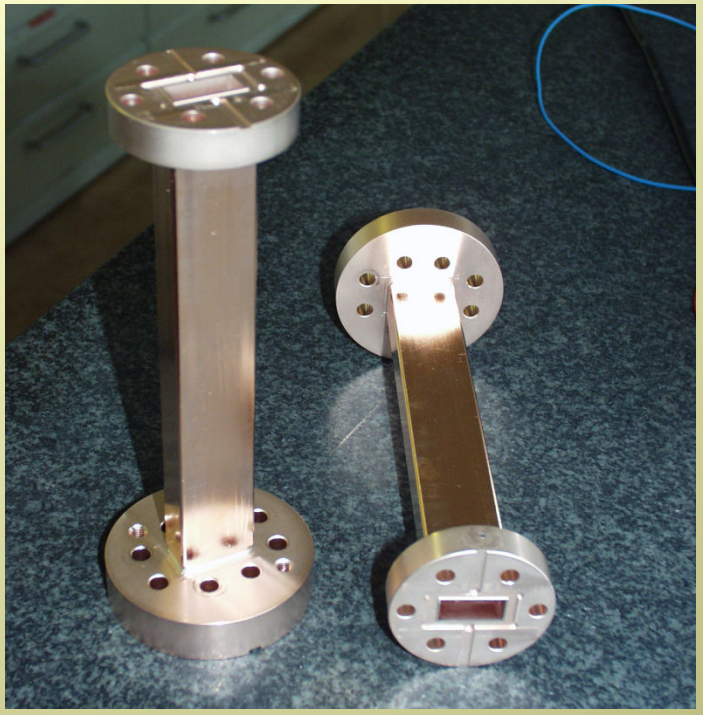

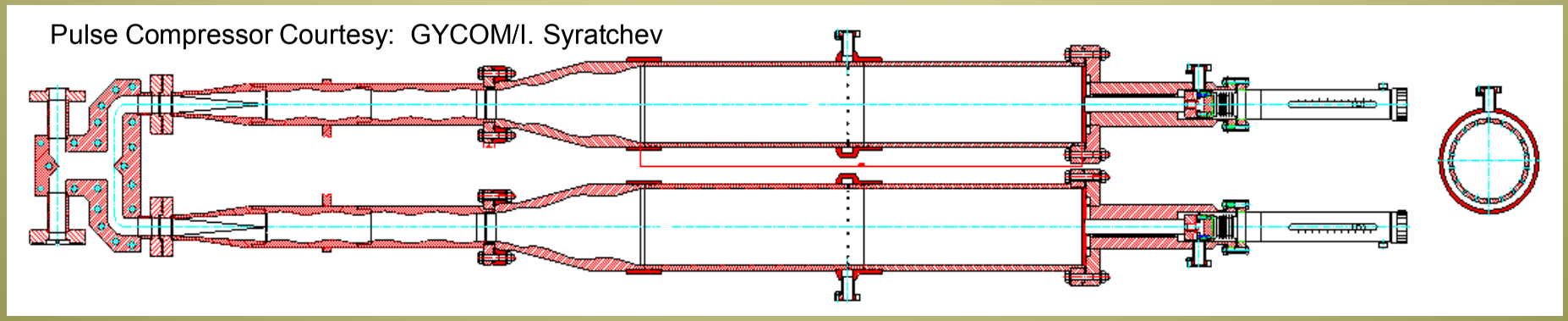
Pulse Compressor Courtesy: GYCOM/I. Syratchev

RF Valve

Design and fabrication by CEA/CERN

The RF valve has been introduced by A. Grudiev (CERN) in the CTF3 30 GHz test stand. It works on the circular mode TE_{01}^{o} mainly to avoid surface electric field and have steps in diameter to “focus” the wave in the center of the guide. Based on the same principle, RF valves working at 11.4 GHz have also been developed at SLAC for accelerating structure testing. The 12 GHz RF valve is a scaled version of the SLAC one.

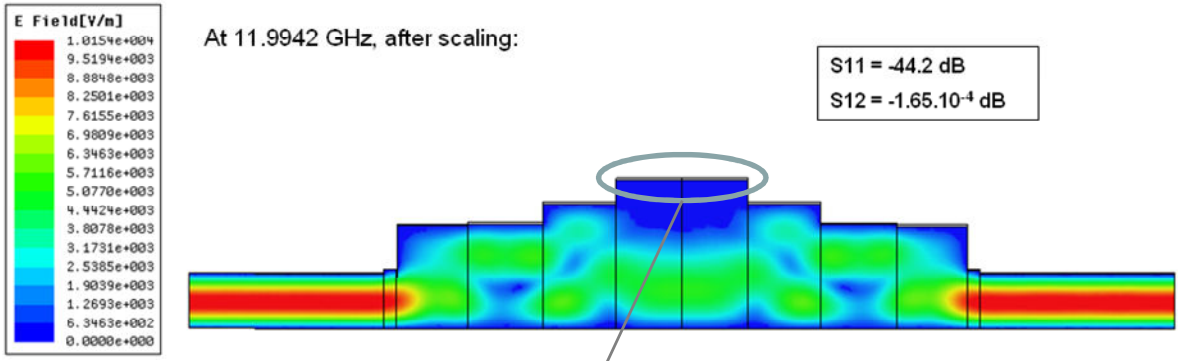

Frequency:	**11.994 GHz**
Peak power:	**120 MW**
Pulse length:	**300 ns**
Repetition rate :	**50 Hz**

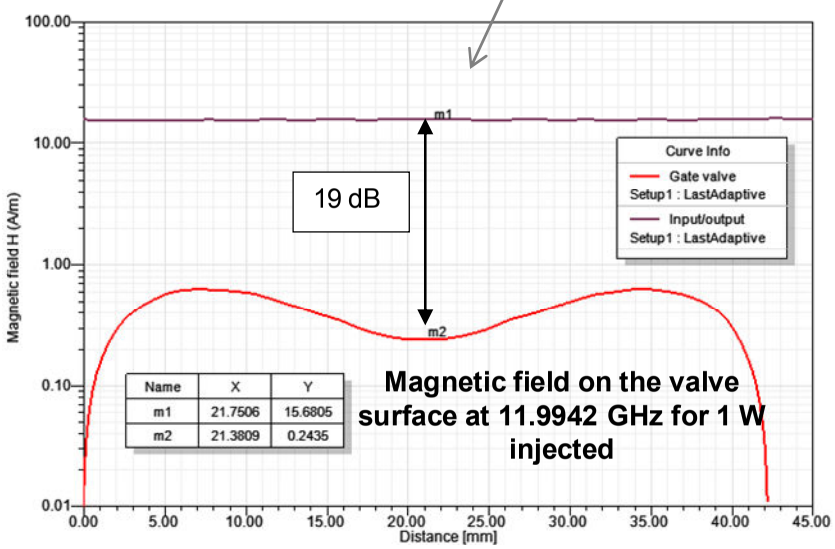

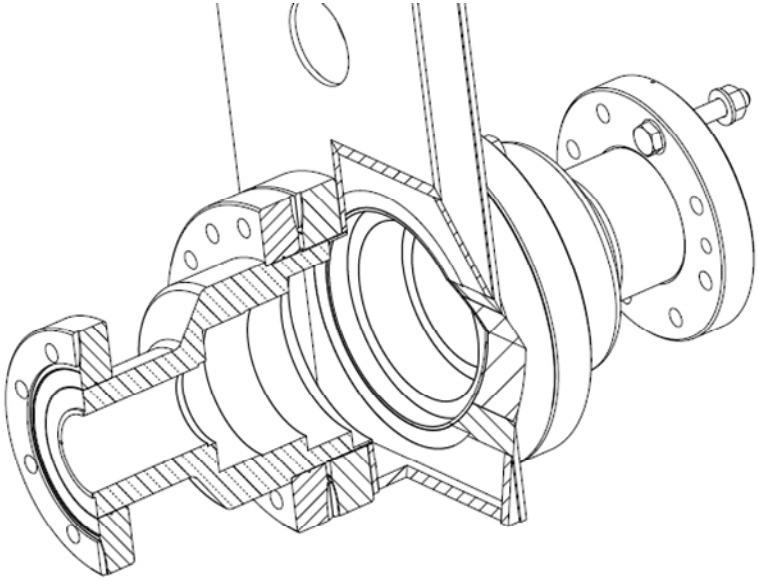

Pulse waveform after SLED compression

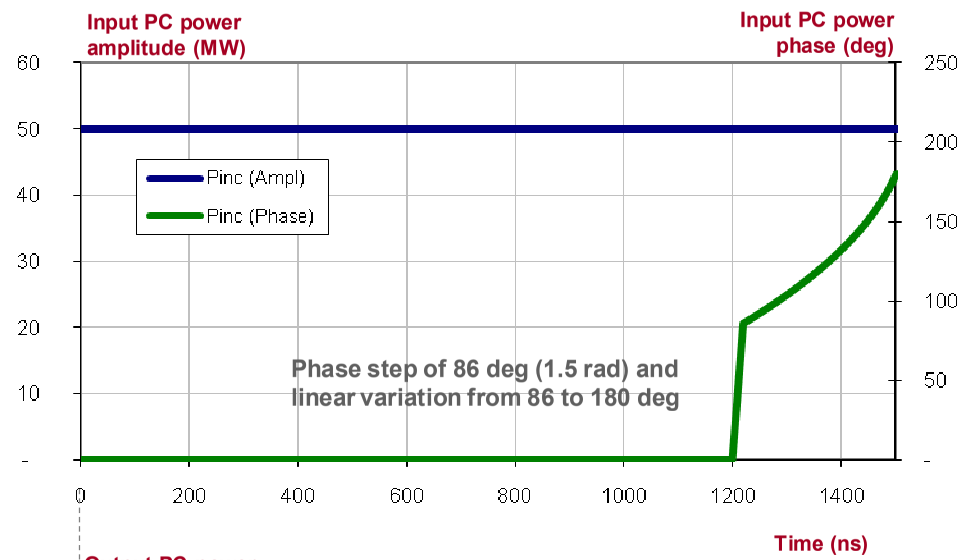

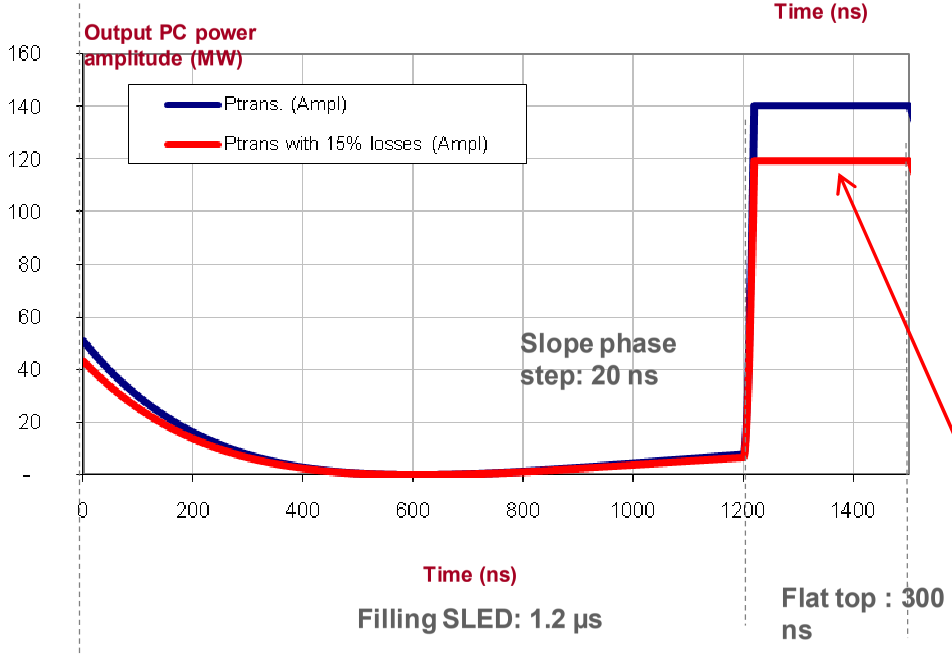

Q0 = 150000

QL = 25000

β=Q0/Qx = 5

Reflexion coef = 0.67

SLED Filling time = 0.663 µs

Power multiplication factor = 2.75

120 MW, 300 ns assuming 15% of losses in the RF network

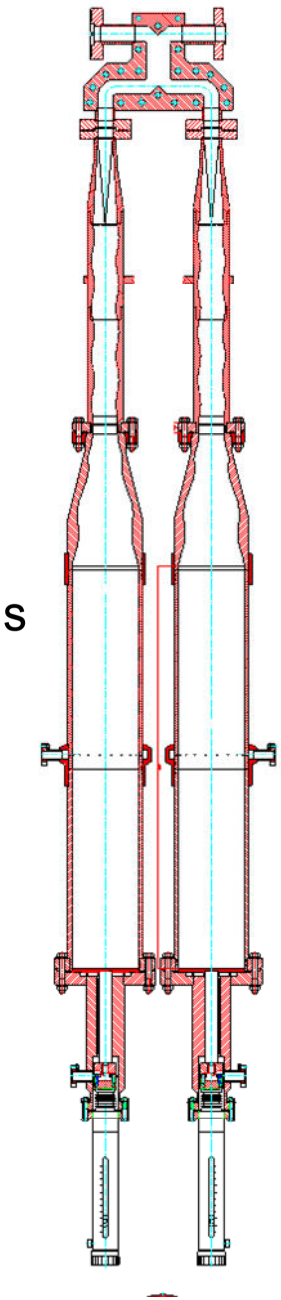

Analysis of the test results

SE contrasts in LV-SEM. Different features observed by In-lens and E-T detector.

→ In-lens image is more sensitive to lower energy SEs.

The In-lens image is mainly composed of low energy electrons whose energy is less than 40 eV and are easyly atracted by the electrostatic field generated by U_B. This can be the reason why SE images of in-lens detector have high surface sensitivity. For the out-lens the main portion of the SEs have higher energy, thus images contain much (bulk) material information.

Sharing of secondary electrons by in-lens and out-lens detector in low voltage canning electorn microscope. K. Kumagai T. Sekiguchi. Ultramicroscopy 109 (2009) 368-372.

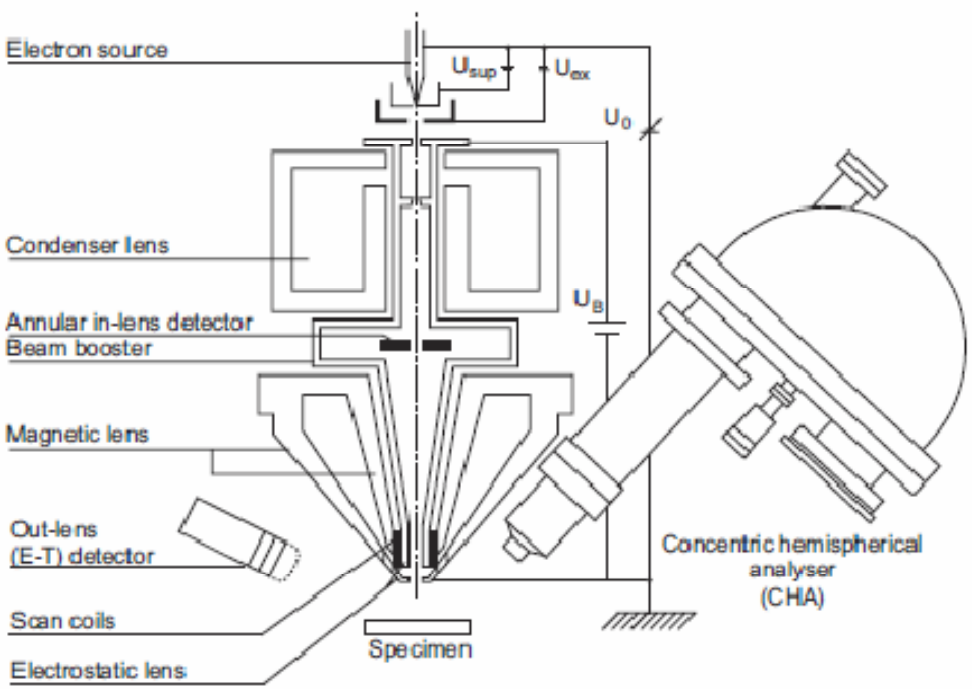

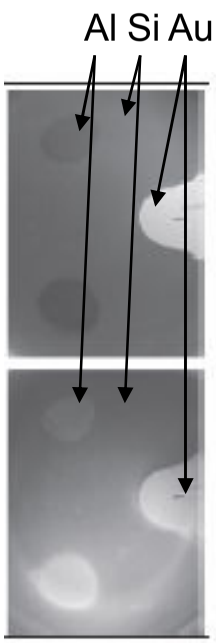

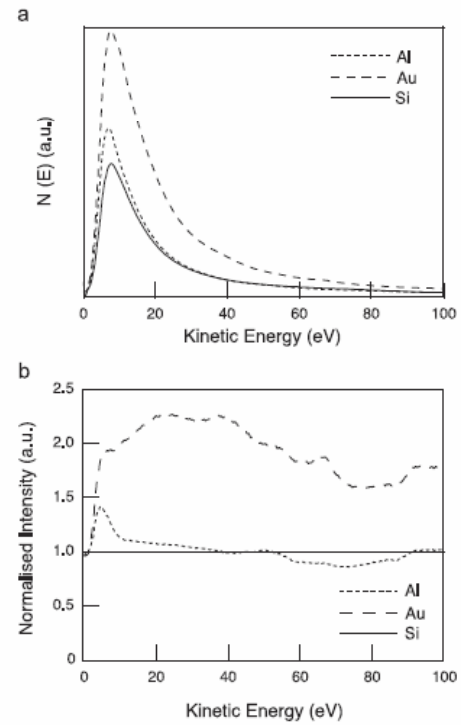

Fig. 3. (a) N(E) spectra on model specimen. (b) Plots of normalised intensity of Al and Au by that of Si. Dotted line, represents Al; dashed, Au; and solid, Si.

T24 - 11WNSDvg1.8Cu

Post mortem SEM inspection

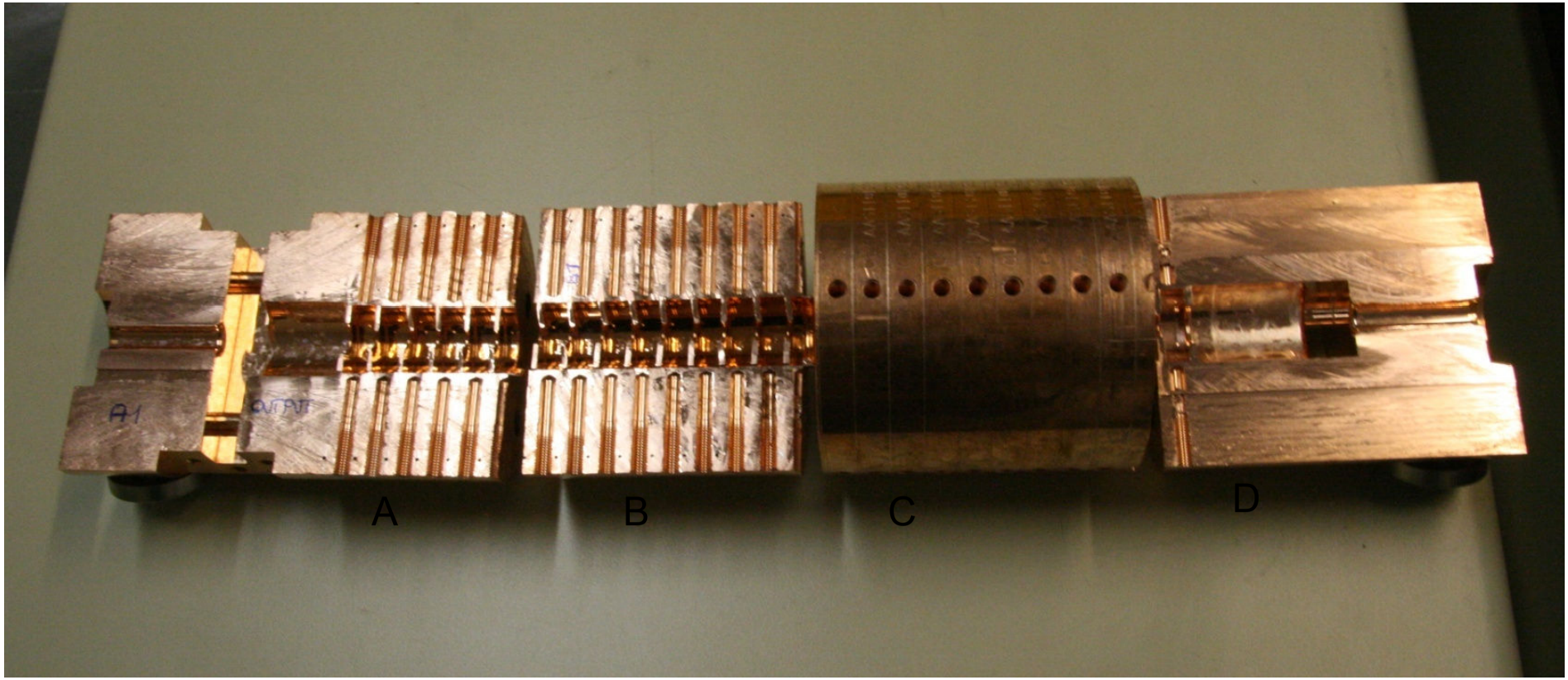

A. Toerklep EN/MME
G. Arnau Izquierdo EN/MME

B1

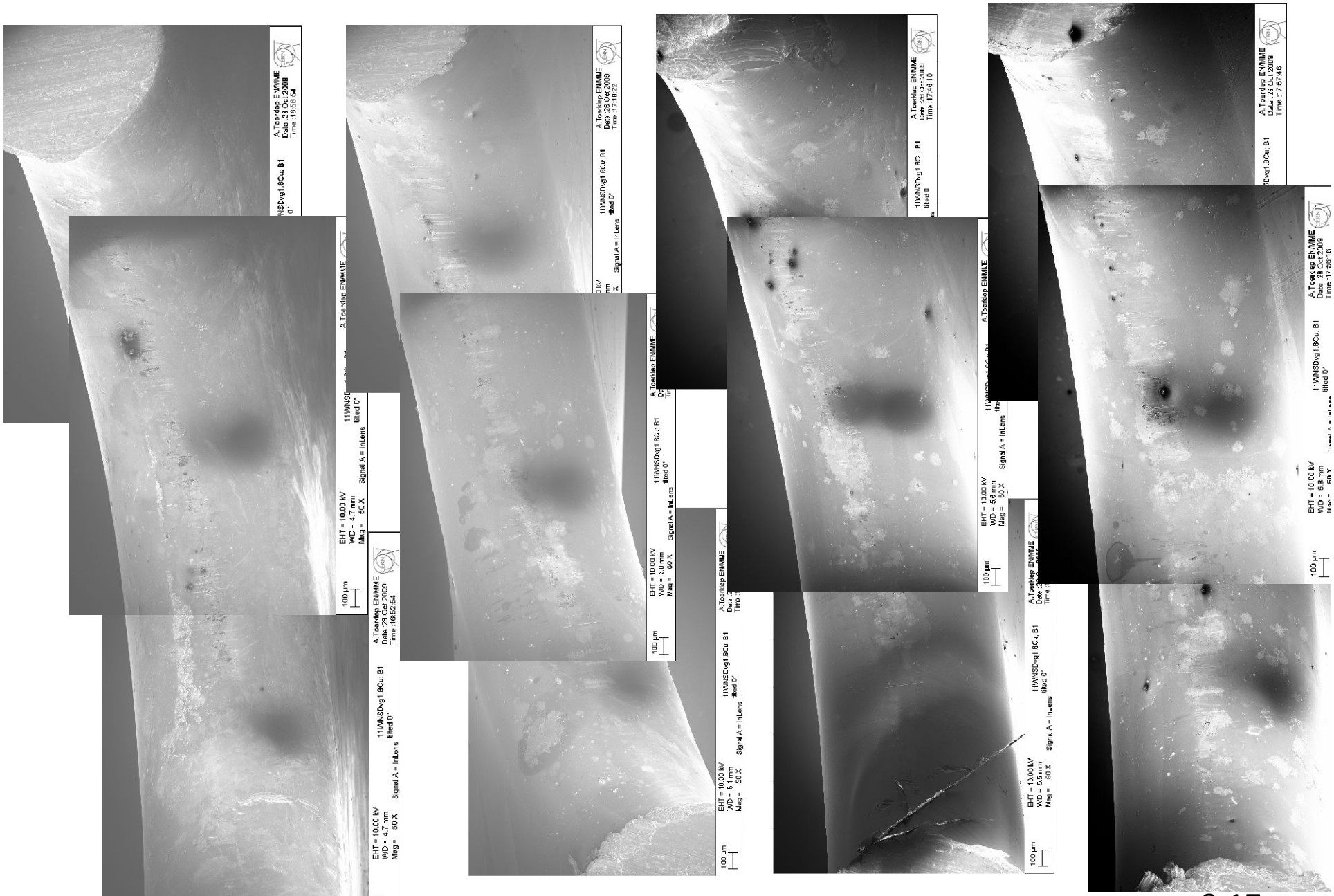
100 µm
EHT = 10.00 kV
WD = 4.7 mm
Mag = 60 X
Signal A = InLens
11WNSDvg1.8Cu; B1
tilted 0°
A.Toerdep ENMME
Date :29 Oct 2009
Time :18:52:54
EHT = 10.00 kV
WD = 5.0 mm
Mag = 60 X
Signal A = InLens
11WNSDvg1.8Cu; B1
tilted 0°
A.Toerdep ENMME
Date :29 Oct 2009
Time :17:18:22
EHT = 10.00 kV
WD = 5.6 mm
Mag = 50 X
Signal A = InLens
11WNSDvg1.8Cu; B1
tilted 0°
A.Toerdep ENMME
Date :29 Oct 2009
Time :17:49:10
EHT = 10.00 kV
WD = 6.8 mm
Mag = 50 X
Signal A = InLens
11WNSDvg1.8Cu; B1
tilted 0°
A.Toerdep ENMME
Date :29 Oct 2009
Time :17:57:48
EHT = 10.00 kV
WD = 6.8 mm
Mag = 50 X
Signal A = InLens
11WNSDvg1.8Cu; B1
tilted 0°
A.Toerdep ENMME
Date :29 Oct 2009
Time :17:56:18

8-20

8-17

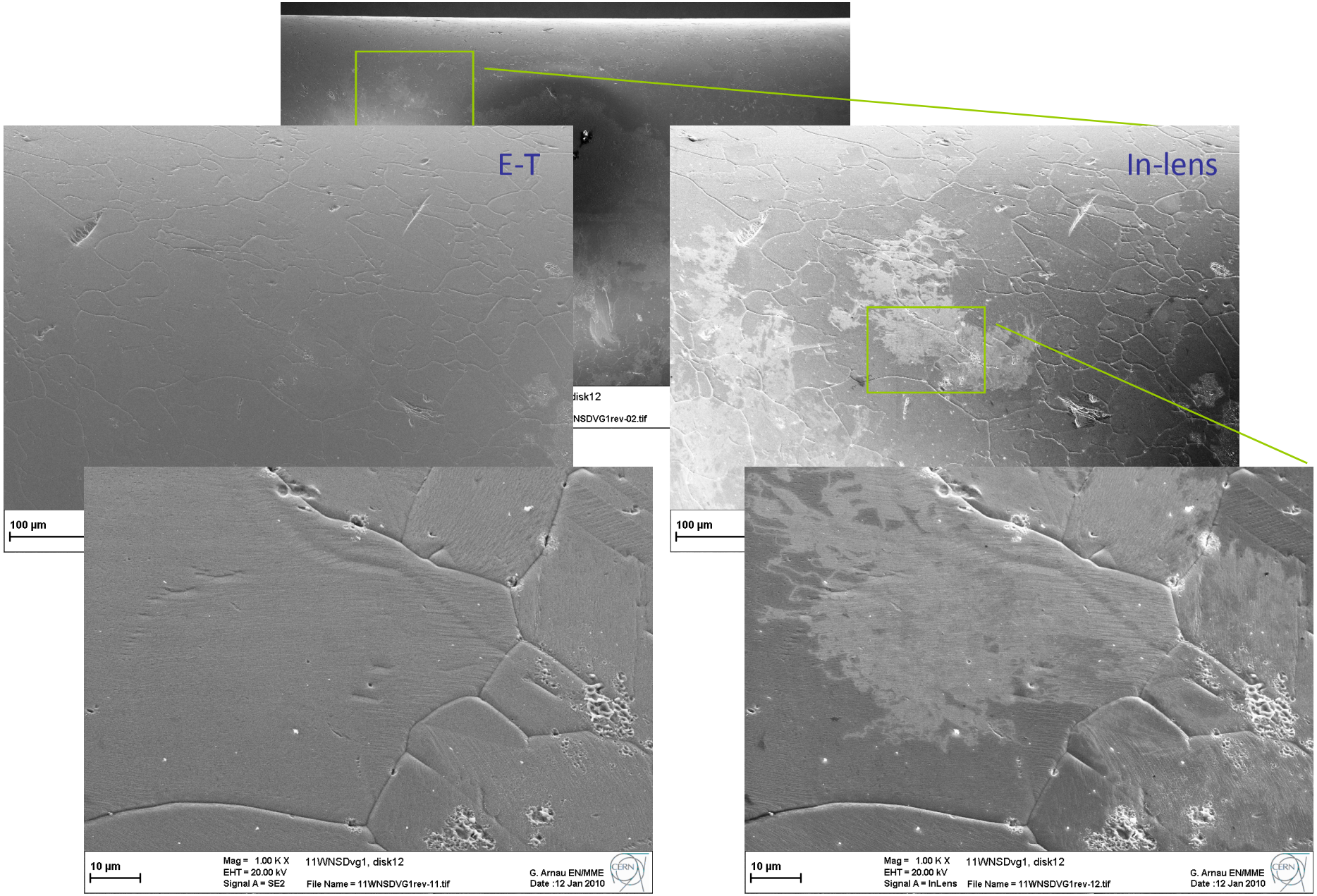

→ presence of worm-like features around some craters close to the big region with the dirt

Worm-like features

In most of the patches of activity the edges are not sharp but seem to be made of a mess of wrinkled lines

Is it a kind of prelude of breakdown or a form of very soft breakdown ?

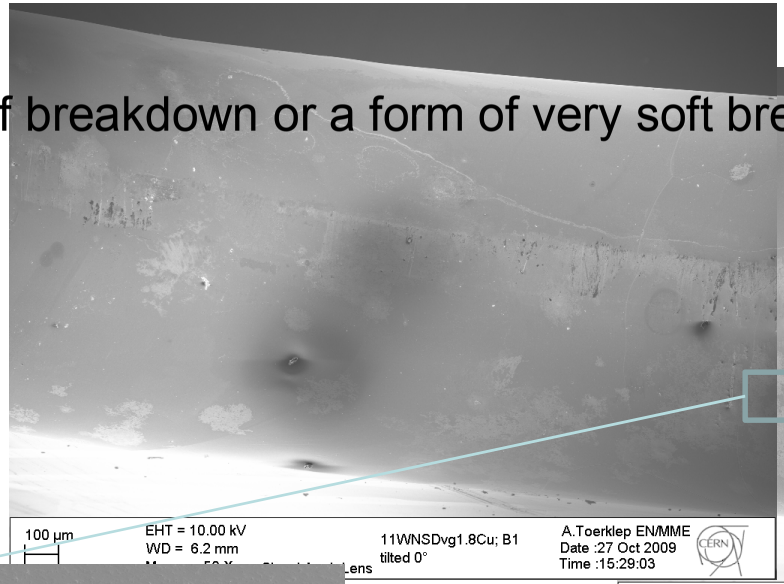

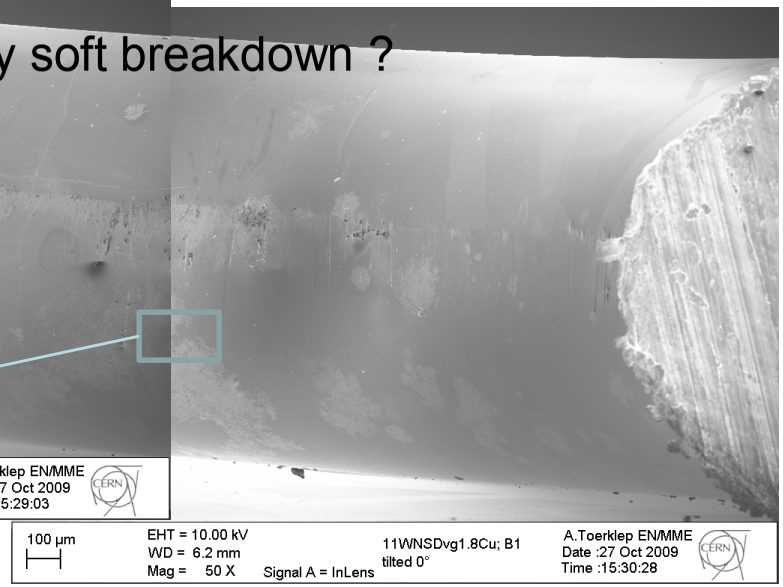

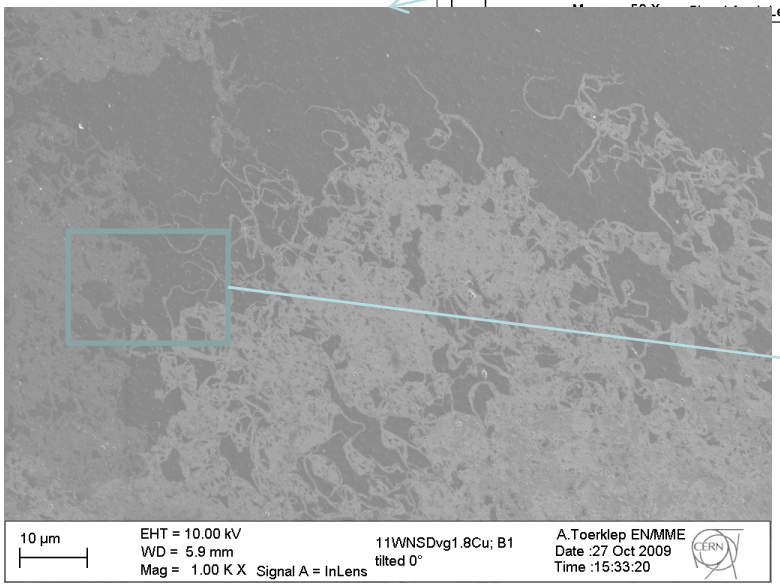

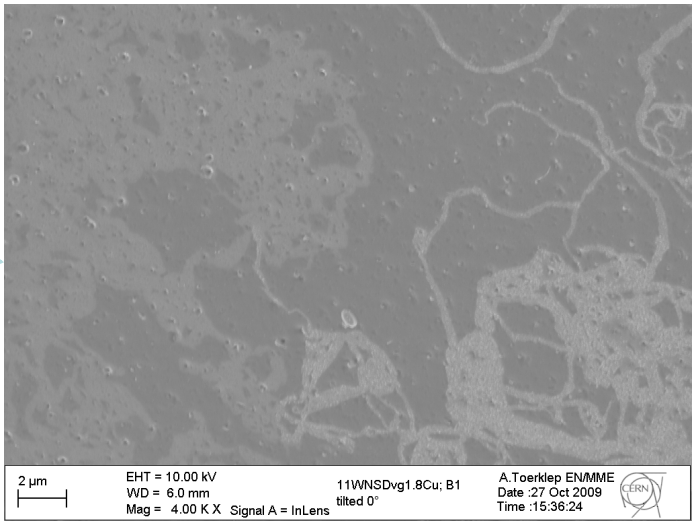

T18 CERN - Inspection on iris 12

Contamination between brazing and testing

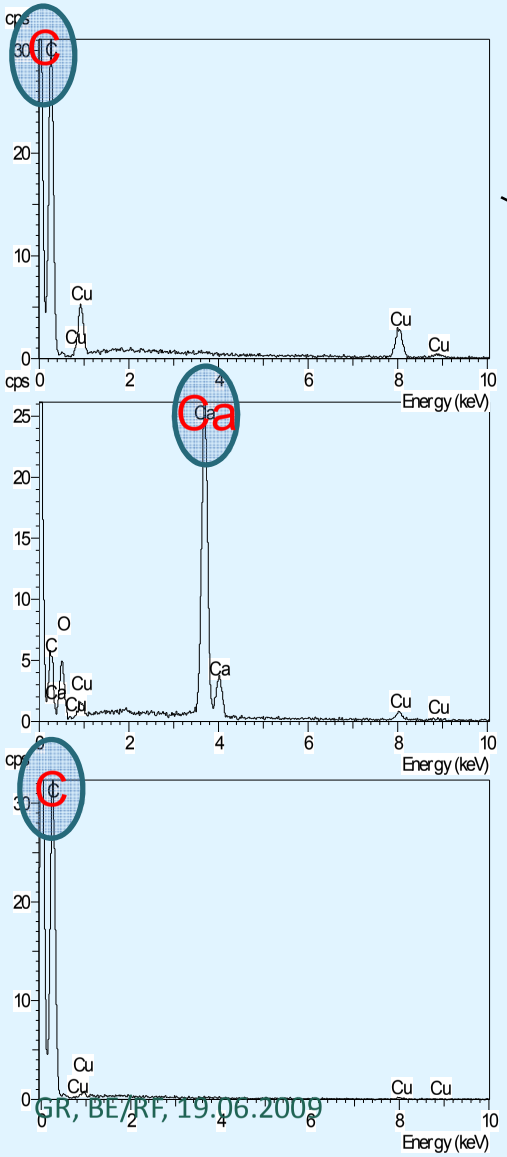

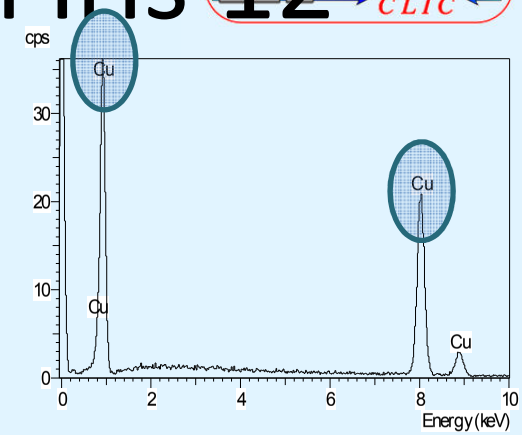

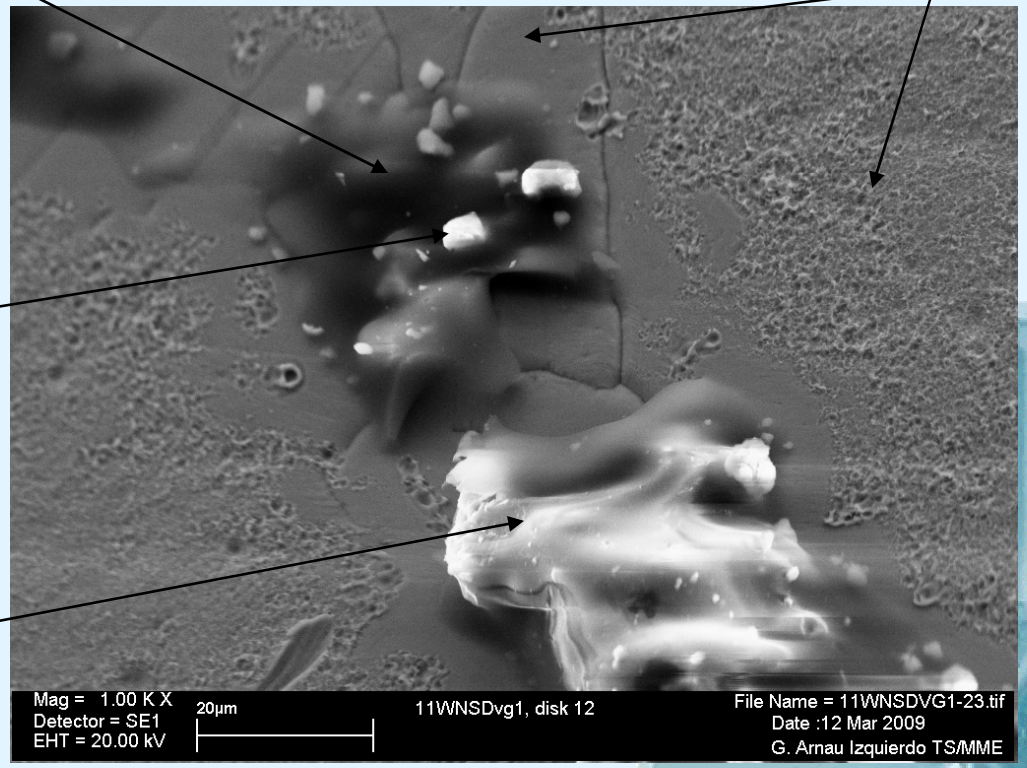

T18/TD18 test result summary

Fig. 10 T18_vg2.6_disk

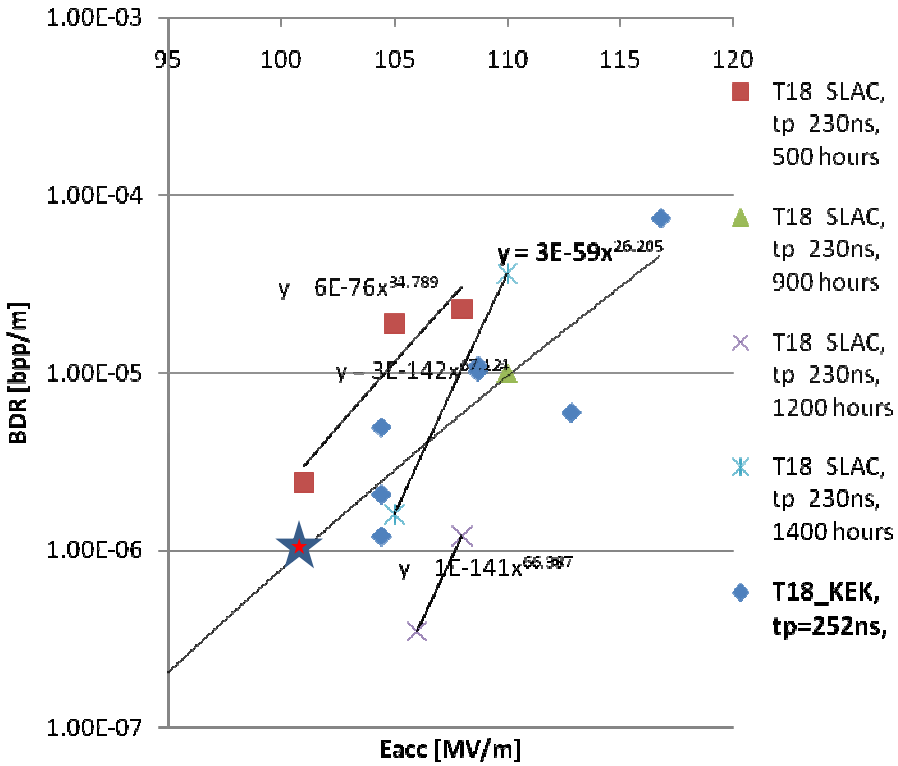

interpolated T18_KEK	
BDR [bpp/m]	1.00E-06
tp [ns]	Eacc [MV/m]
252	**1.01E+02**

Fig. 11 TD18_vg2.4_disk

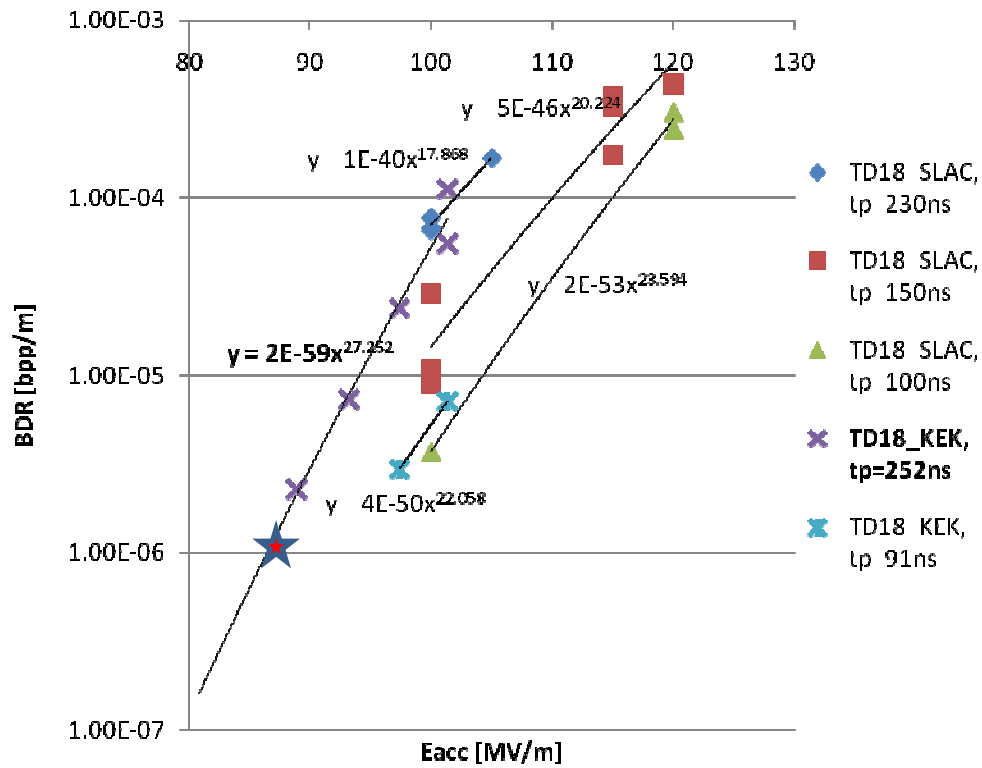

interpolated TD18_KEK	
BDR [bpp/m]	1.00E-06
tp [ns]	Eacc [MV/m]
252	**8.66E+01**

TD18_KEK is still under test and the performance is improving

Comparison at tp=252 ns, BDR=1e-6 bpp/m

T18: <Ea> = 101 MW/m

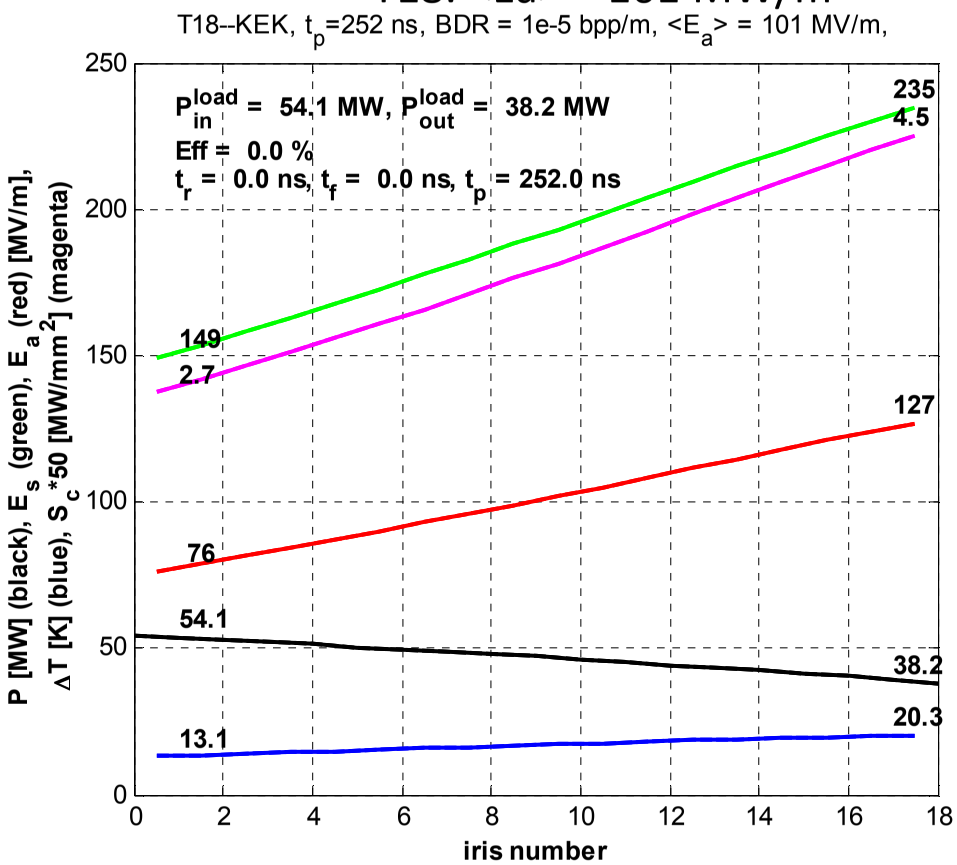

P/C*tp^(1/3) = **13.4** [MW/mm*ns^(1/3)]

TD18: <Ea> = 86.6 MW/m

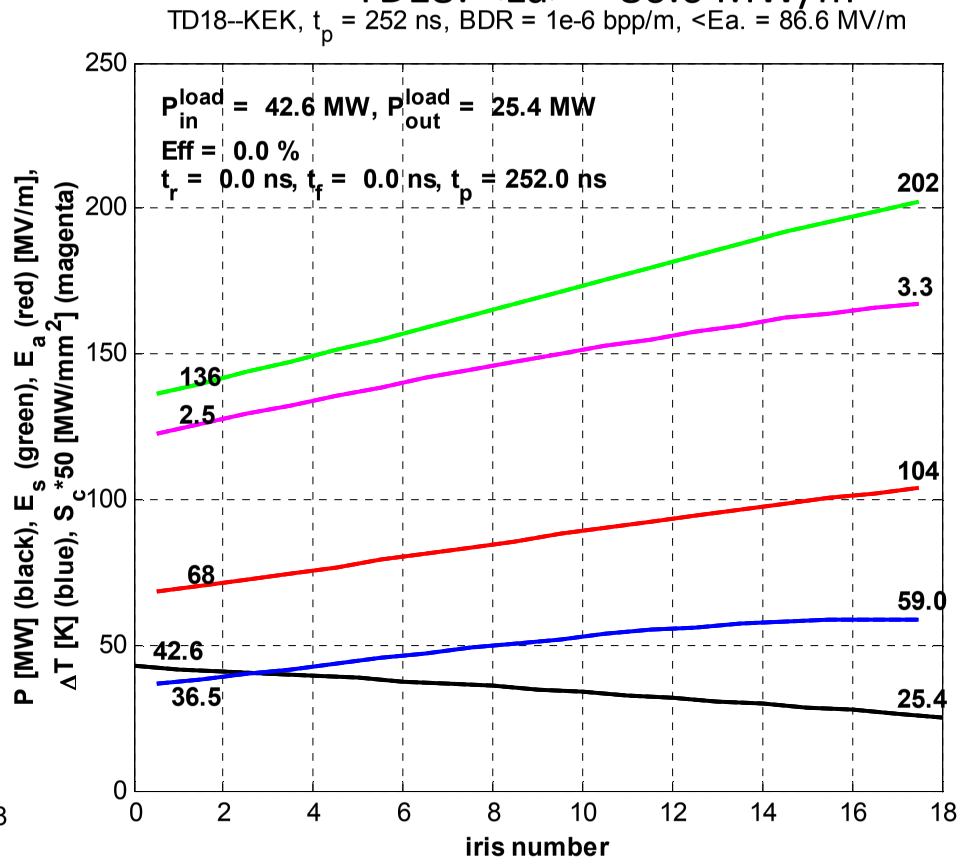

P/C*tp^(1/3) = **10.6** [MW/mm*ns^(1/3)]

In TD18, all quantities are lower than in T18 measured at the same tp and BDR, except for the pulsed surface heating temperature rise which is factor 3 higher ???

Comparing last cell at tp=252 ns, BDR=1e-6 bpp/m

T18: <Ea> = 101 MW/m, Ea = 127 MV/m

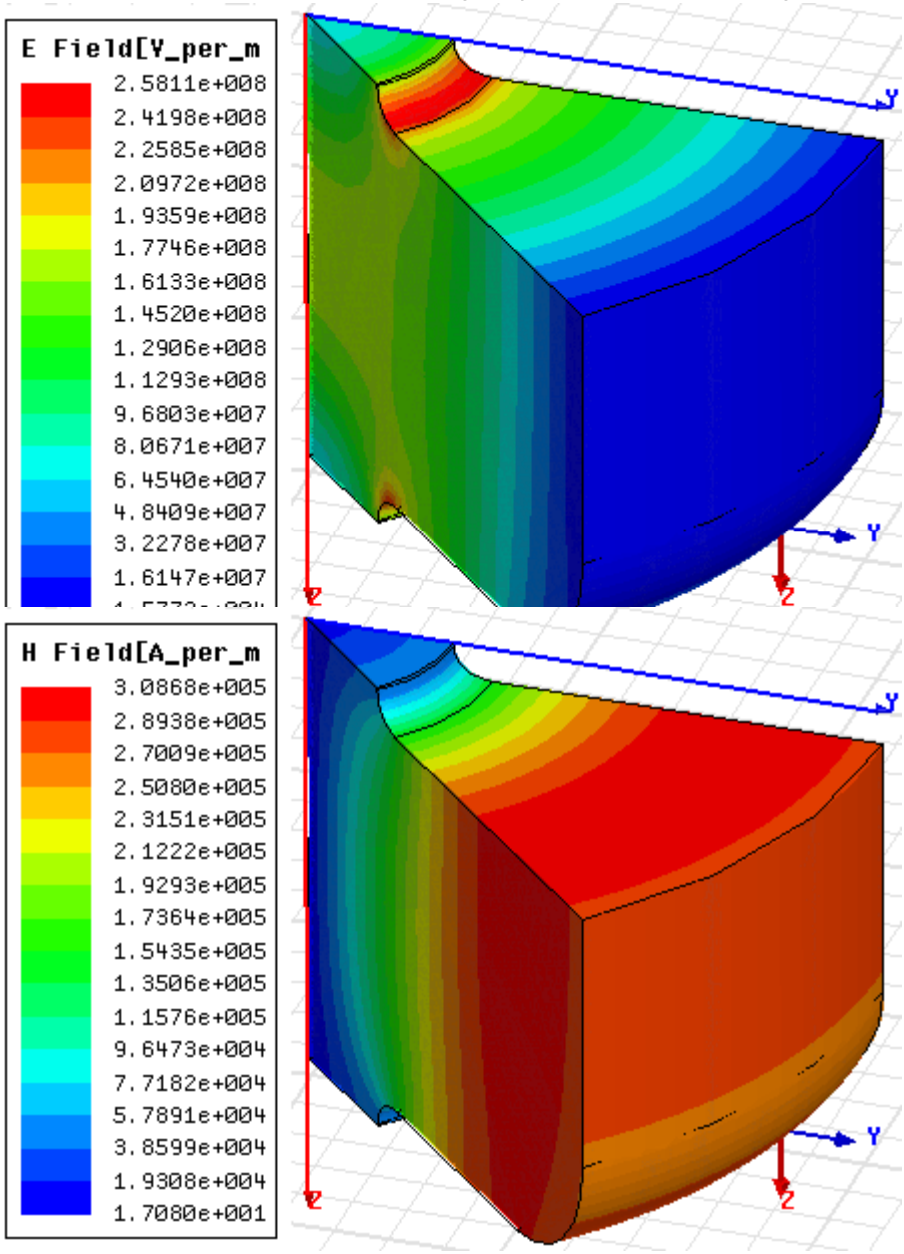

TD18: <Ea> = 86.6 MW/m; Ea = 104 MV/m

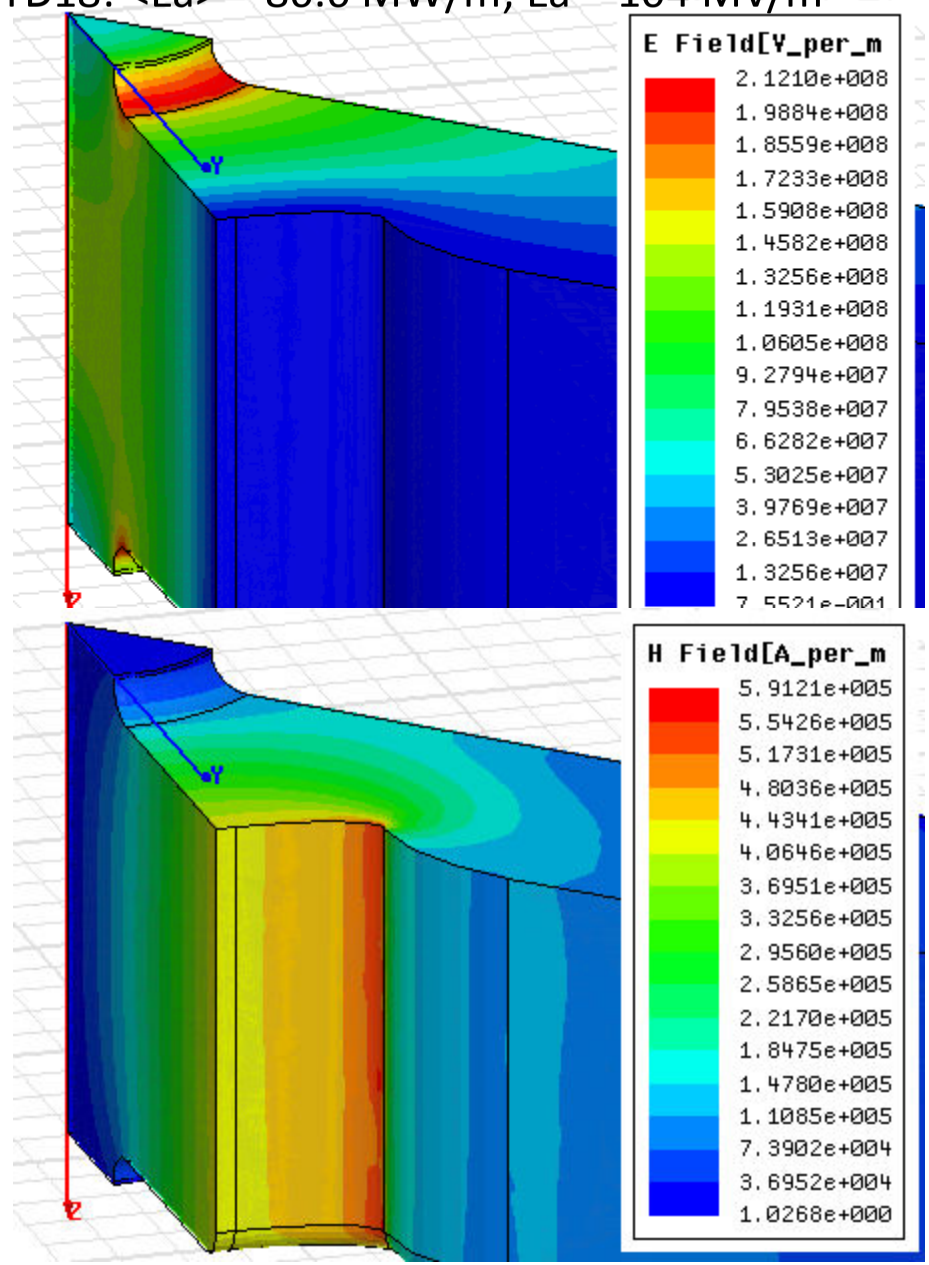

Comparing last cell at tp=252 ns, BDR=1e-6 bpp/m

T18: <Ea> = 101 MW/m, Ea = 127 MV/m

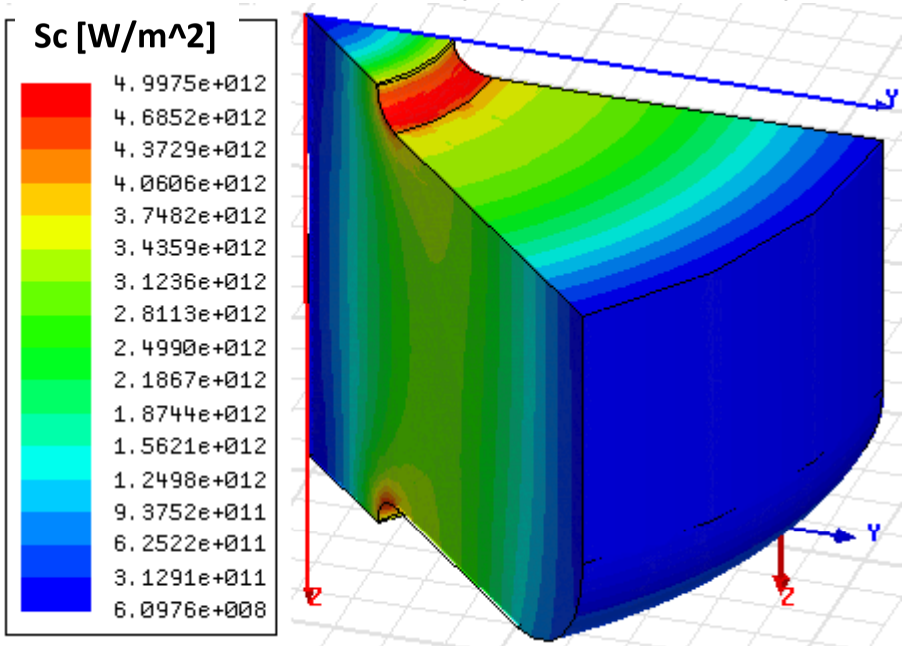

Stored energy: 13.8 mJ

TD18: <Ea> = 86.6 MW/m; Ea = 104 MV/m

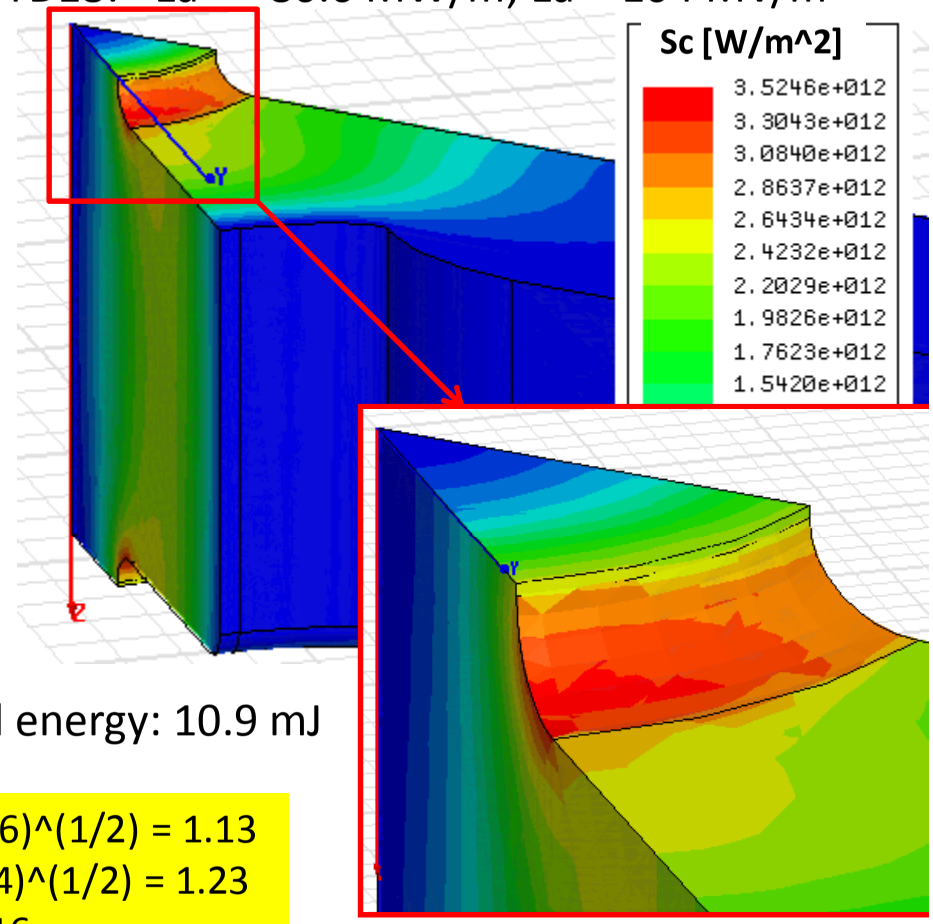

Stored energy: 10.9 mJ

Asymmetry in Sc due to asymmetry in Hs

ratio of sqrt(P/C) in the first cell T18/TD18 = (54.1/42.6)^(1/2) = 1.13
ratio of sqrt(P/C) in the last cell T18/TD18 = (38.2/25.4)^(1/2) = 1.23
ratio of Esurf in the last cell T18/TD18 = 235/202 = 1.16
ratio of sqrt(Sc) in the last cell T18/TD18 = (4.5/3.3)^(1/2) = 1.17

ratio of Hsurf in the last cell T18/TD18 = 3.1/5.2 = 0.6

It would be very interesting to cut one of the TD18s and see the damage pattern

Near term plans

TD18_vg2.4_disk:

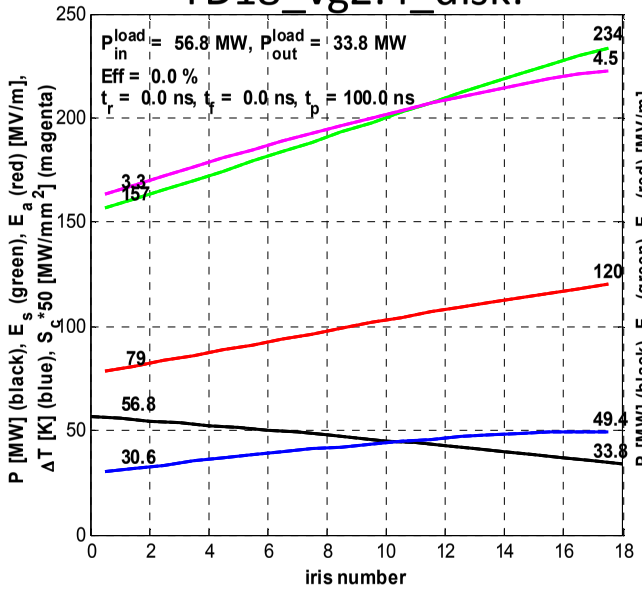

TD24_vg1.8_disk:

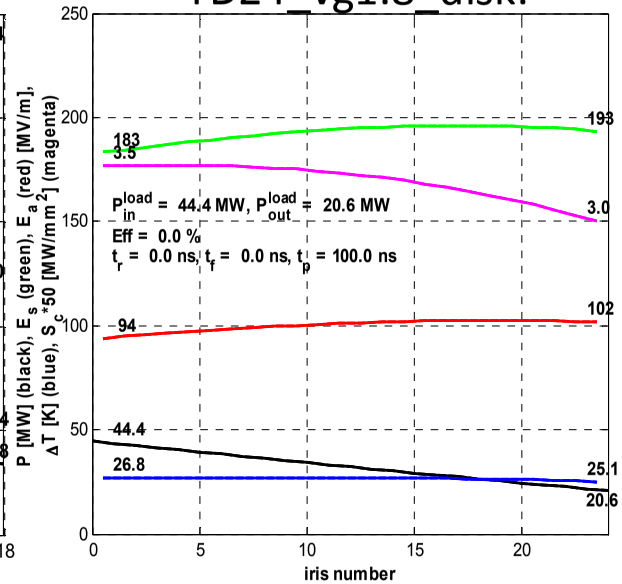

At 11.424 GHz testing of T24/TD24 should come this year.

Very interesting because TD24 has 2 times lower PSH ΔT than TD18

At **11.994 GHz** testing of T24/TD24/TD24_R05 are planed for the next year.

TD24 ➔TD24_R05 provides further reduction of PSH ΔT by 1/3

TD24_vg1.8_disk

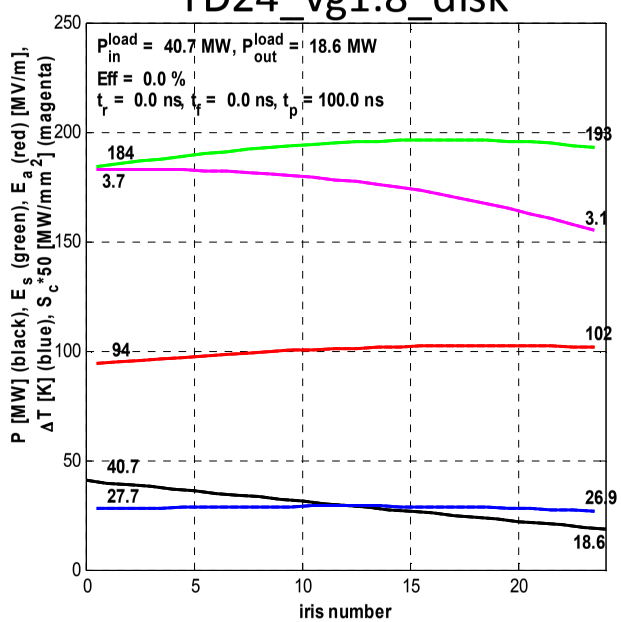

TD24_vg1.8_R05:

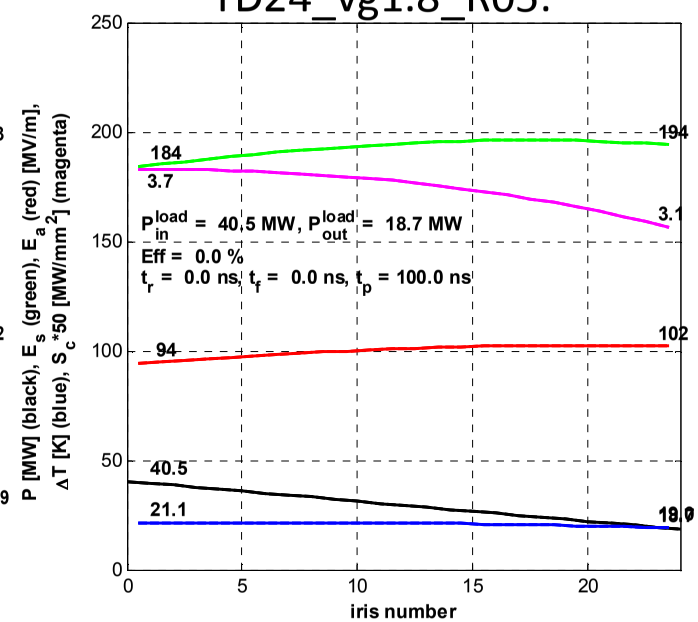

Conclusions

- RF DESIGN: high pulsed surface heating temperature rise in TD18 is addressed in the coming TD24 and it is minimized even further down in the TD24_R05.
- MANUFACTURING: The first CERN structure made according to the NLC/JLC fabrication procedure is ready to be tested in NLCTA.
- HIGH POWER TESTING: 12 GHz stand along high-power test stand is well under way heading towards first rf power available at the end of the year.